Primal and Dual Integrated Force Methods Used for Stochastic Analysis

At the NASA Glenn Research Center, the primal and dual integrated force methods are being extended for the stochastic analysis of structures. The stochastic simulation can be used to quantify the consequence of scatter in stress and displacement response because of a specified variation in input parameters such as load (mechanical, thermal, and support settling loads), material properties (strength, modulus, density, etc.), and sizing design variables (depth, thickness, etc.). All the parameters are modeled as random variables with given probability distributions, means, and covariances. The stochastic response is formulated through a quadratic perturbation theory, and it is verified through a Monte Carlo simulation.

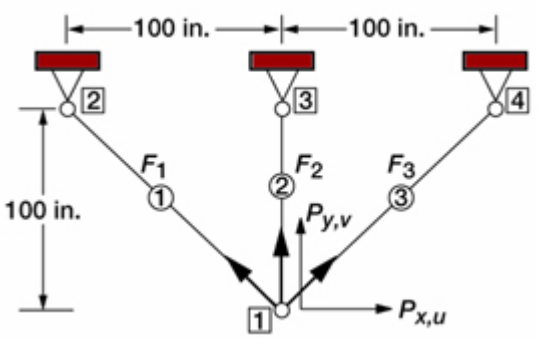

Three-bar truss.

The preceding figure illustrates the stochastic response analysis for a three-bar truss subjected to mechanical, thermal, and support settling loads. The probability and cumulative distribution functions are shown in the following left and right line graphs, respectively, for the third bar force. The bar force has a much wider variation than the mechanical load. The bar chart shows the sensitivity of the third bar force for a set of 10 primitive variables: three bar areas, the Young's modulus, the coefficient of expansion, two-component mechanical load, temperature variation, and two-component support settling. The sensitivity of the bar force with respect to the Young's modulus is significant because of the presence of temperature and support settling loads. The bar force is most sensitive to the vertical component of support settling.

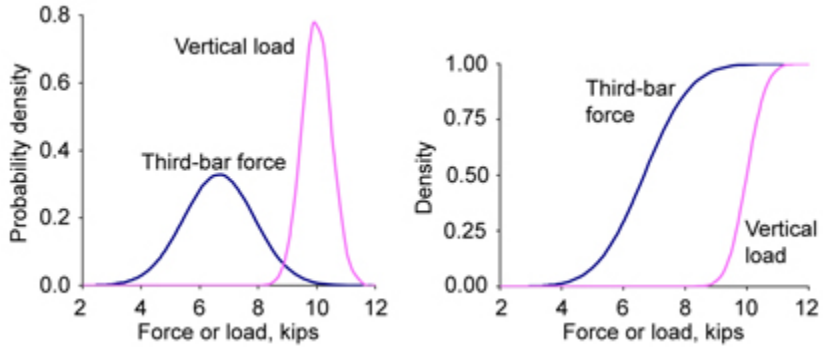

Left: Probability distribution function for the third-bar force. Right: Cumulative distribution function for the third-bar force.

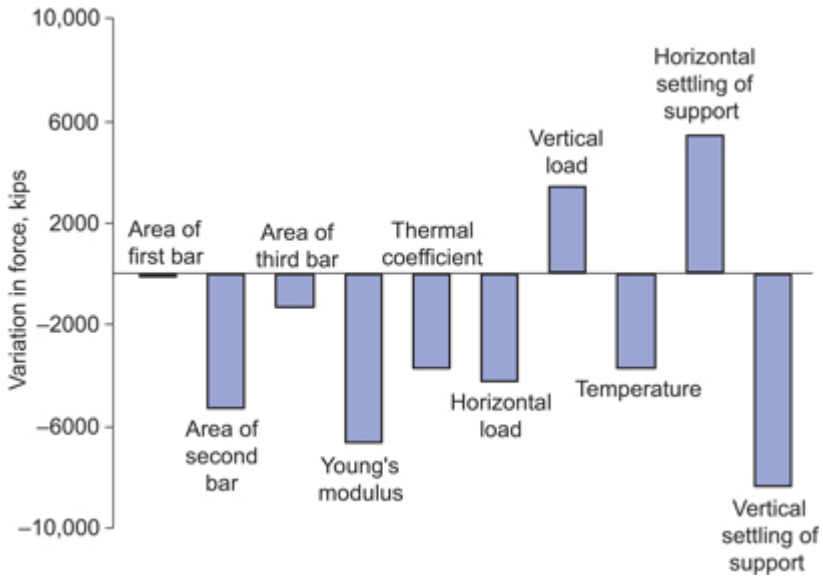

Sensitivities for the third-bar force.

Long description of figure 3. Bar chart of variation in force in kips for area of first, second, and third bar; Young's modulus; thermal coefficient; horizontal load; vertical load; temperature; horizontal settling of support; and vertical settling of support.

Glenn contact: Dr. Shantaram S. Pai, 216-433-3255, Shantaram.S.Pai@nasa.gov
Ohio Aerospace Institute (OAI) contact: Dr. Surya N. Patnaik, 216-433-5916, Surya.N.Patnaik@grc.nasa.gov
Author: Dr. Surya N. Patnaik
Headquarters program office: OAT
Programs/Projects: Ultra Safe, UEET