MSFC-063

Aerocapture Inflatable Decelerator for Planetary Entry

Sajjad Reza [1], Richard Hund[2], Frank Kustas[3], William Willcockson[4], Jarvis Songer[5]
Lockheed Martin Space Systems Company, Littleton, CO, 80125

Glen Brown [6]
Vertigo Incorporated, Lake Elsinore, CA, 92530

Forward Attached Inflatable Decelerators, more commonly known as inflatable aeroshells, provide an effective, cost efficient means of decelerating spacecrafts by using atmospheric drag for aerocapture or planetary entry instead of conventional liquid propulsion deceleration systems. Entry into planetary atmospheres results in significant heating and aerodynamic pressures which stress aeroshell systems to their useful limits. Incorporation of lightweight inflatable decelerator surfaces with increased surface-area footprints provides the opportunity to reduce heat flux and induced temperatures, while increasing the payload mass fraction. Furthermore, inflatable aeroshell decelerators provide the needed deceleration at considerably higher altitudes and Mach numbers when compared with conventional rigid aeroshell entry systems. Inflatable aeroshells also provide for stowage in a compact space, with subsequent deployment of a large-area, lightweight heatshield to survive entry heating. Use of a deployable heatshield decelerator enables an increase in the spacecraft payload mass fraction and may eliminate the need for a spacecraft backshell.

Nomenclature

AID	=	Aerocapture Inflatable Decelerator
HGA	=	High Gain Antenna
ACS	=	Attitude Control System
R/Rmax	=	Radius over Maximum Radius
Q_dot	=	Heat Rate
TPS	=	Thermal Protection System
CFD	=	Computational Fluid Dynamics
TRL	=	Technology Readiness Level
PDR	=	Preliminary Design Review
LAURA	=	Langley Aerothermodynamic Upwind Relaxation Algorithm
AAT	=	Aerocapture Aeroshell Technologies

I. Introduction

A Lockheed Martin Space Systems Company (LMSSC), Vertigo, Inc. and the University of Colorado team, performed a study, under funding from NASA-Marshall Space Flight Center (MSFC), to analyze and evaluate candidate forward-attached inflatable decelerators (inflatable aeroshells) for planetary entry missions. Lockheed has a history of providing rigid aeroshells for numerous NASA planetary entry missions, starting with Viking and including Mars Pathfinder (MPF), Mars Exploration Rovers (MER), Genesis, Stardust, and the upcoming Mars Science Laboratory (MSL) mission. Although rigid aeroshells provide a proven technique for planetary entry, future manned missions to Mars will require heavy landers in the 30-100 metric ton range[1]. Such heavy masses require

[1] Systems Engineer, Lockheed Martin Space Systems, Aero Entry Systems
[2] Manager, Lockheed Martin Space Systems, Aero Entry Systems
[3] Materials Engineer, Lockheed Martin Space Systems, Aero Entry Systems
[4] Entry Systems, Lockheed Martin Space Systems, Aero Entry Systems
[5] Aerothermal and Aeroelastic Engineer, Lockheed Martin Space Systems, Aero Entry Systems
[6] Chief Engineer, Vertigo Inc, Lake Elsinore, CA, AIAA Associate Fellow

deceleration at earlier times and higher Mach and altitudes than current rigid aeroshell/parachute technology can provide[1]. Deployment of inflatable aeroshells allows deceleration to occur at high altitudes and Mach numbers thus allowing more payload lander mass to reach the surface than is currently possible with conventional rigid aeroshell/parachute decelerator systems.

This study, termed Aerocapture Inflatable Decelerator (AID) included trade and development of candidate deployable inflatable aeroshell decelerator concepts for planetary mission entry.

An aerocapture to Saturn's moon Titan was selected by NASA as a baseline mission, however a Mars aerocapture scenario was considered for a rigid to inflatable comparison study, and a Mars direct entry analysis was also studied using the inflatable aeroshell designed for a Titan aerocapture mission

This paper provides a brief discussion of requirements, presentation of a trade study to select the baseline inflatable aeroshell design, a description of the selected baseline inflatable aeroshell, and a comparison of a Mars rigid vs. inflatable aeroshell. Also discussed are the inflatable aeroshell guidance analysis/shape morphing techniques, and the applicability of our inflatable aeroshell design for a Mars direct entry mission profile. The Reference 2 companion paper presents details of the inflatable aeroshell material candidates, selection of materials, and material testing of the high TRL inflatable aeroshell configuration.

II. Inflatable Aeroshell Requirements

Requirements for an aerocapture decelerator are dependant on a variety of factors, such as destination and class/size of the spacecraft. For our studies, we considered missions with 300, 600, or 1200 kg launch masses and destinations of Titan, Mars, Neptune, or Venus. Two reference missions were downselected for the rigid vs. inflatable comparison; a large vehicle mission to Titan and a smaller (Mars Odyssey class) mission to Mars. Once a destination and class of spacecraft were selected, key design requirements were then derived. These requirements concern spacecraft mass and geometry, the trajectory, and the aerothermal environment. High-level requirements for the Titan and Mars aerocapture mission are presented in Table 1.

Table 1. Key Requirements for Aerocapture

Parameter	**Requirement**	**Parameter**	**Requirement**
Destination	Titan	Destination	Mars
Launch mass	1200 kg	Launch mass	700 kg
Captured orbit	1700 km altitude	Captured orbit	25100 km apoapsis
Entry velocity	6.5 km/s	Entry velocity	6.0 km/s
Launch shroud	3.75 m max.	Launch shroud	2.65 m max

Using the basic mass and geometry information, a series of trajectory simulations were conducted for a Titan arrival entry velocity and a variety of vacuum periapses runs. This produced a range of capture profiles shown in Figures 1 and 2, to begin the process of environmental definition. Maximum entry loads of 2.2 Earth g's were established, which is a key input to the structural design of the inflatable aeroshell.

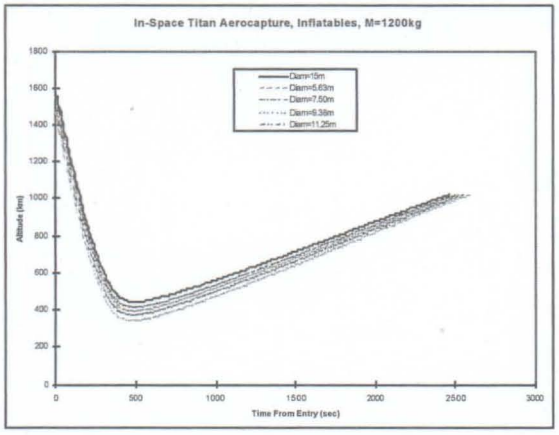

Figure 1. Titan Aerocapture Altitudes

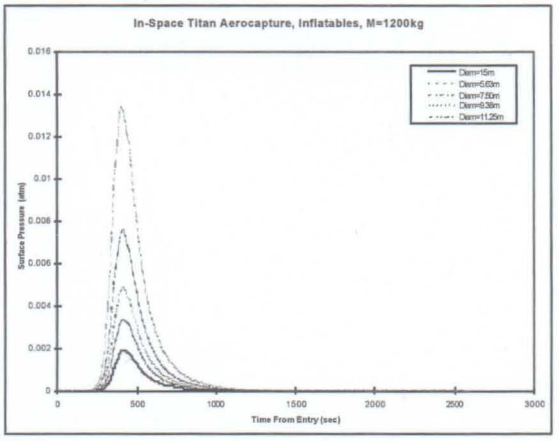

Figure 2. Titan Aerocapture Surface Pressure

III. Inflatable Aeroshell Trade Study

The Lockheed Martin team chose to compare multiple types of inflatable aeroshells and select a promising baseline before proceeding with an inflatable to rigid aeroshells comparison. This comparison was based on structural and aerothermal analysis coupled with a pro/con evaluation, augmented by an assessment of each option compared to figures of merit obtained from NASA-MSFC. Figures 3 through 6 present four different types of inflatable aeroshell designs that were considered for our trade. The pros and cons of each option are presented for each potential configuration. Inflatable aeroshell designs that were considered included: 1) multiple stacked tori, 2)

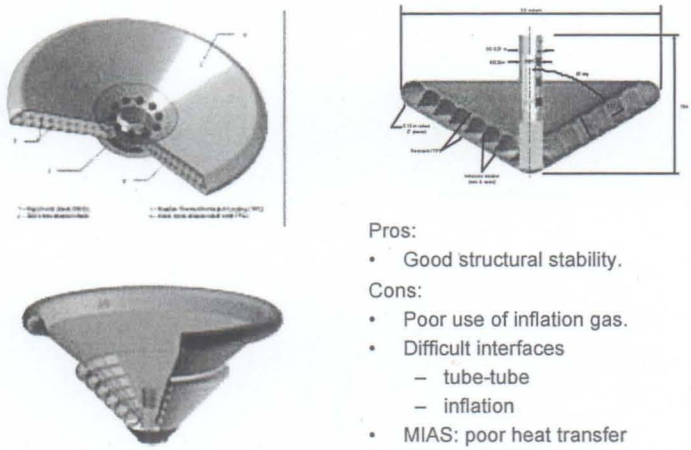

Pros:

- Good structural stability.

Cons:

- Poor use of inflation gas.
- Difficult interfaces
  - tube-tube
  - inflation
- MIAS: poor heat transfer
- IRVE: poor shear stiffness

Figure 3. Multiple Stacked Tori

hypercone, single surface, 3) double surface, ribbed, and 4) membrane supported by spars and an outer rim.

Based on our assessment of the options, including detailed sizing and aerothermal analysis, we selected the spar with rim inflatable with a thin membrane between the spars option (Figure 6) as the most promising inflatable aeroshell configuration. Originally a spar with rim inflatable with an internal bladder was selected however after detailed analyses it was determined that an internal bladder concept was less reliable than a thin membrane supported radially by inflatable spars and torus. The spar with membrane concept provides numerous advantages, including using the backside surface for efficient heat rejection, the flexibility of the spars to accommodate multiple types of materials in the forebody, overall scalability (i.e. easily scaleable to larger sizes as required for other possible destinations), efficient membrane shape control, and efficient structure and gas usage.

Pros:

- Lightest weight structure
- Efficient use of inflation gas
- Good heat transfer

Cons:

- Concave shape causes adverse shock interaction and high local heating.

Figure 4. Single Surface Hypercone

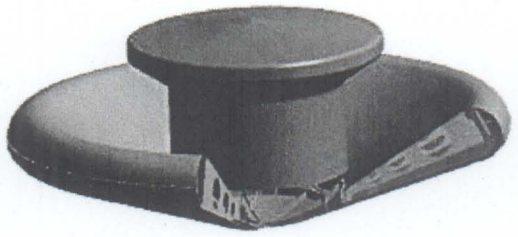

Pros:
- Good surface control
- Streamwise smooth
- Efficient material use

Cons:
- Manufacturing issues
  - Joining/seaming
  - Structural reinforcement
- Inefficient use of inflation gas
- Cross-flow Wavy

Figure 5. Ribbed Double Surface inflatable

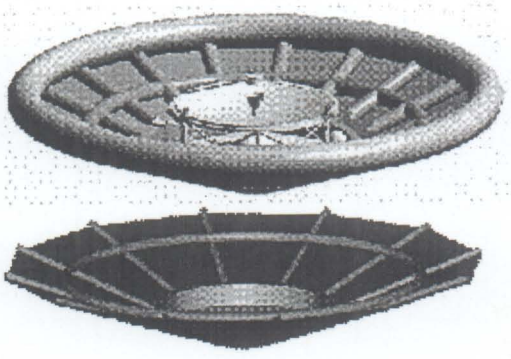

Pros:
- Efficient structure
- Efficient gas usage
- Good heat transfer
- Potential for shape-morphing
- Known, scalable manufacturing technology
- Inflatable Components Thermally Protected

Cons:
- Surface deflection – Assessed in Guidance Analysis - minimal
- Cross-flow wavy
  - Minimal impact

Figure 6. Spar With Rim Inflatable Baseline Configuration

IV. Inflatable Aeroshell Baseline Design

This section provides the design features candidate material, and aerothermal analysis for our chosen inflatable aeroshell configuration. We evaluated diameters up to 15 m and various materials of construction[2]. Our baseline design is constructed of high TRL materials[2] and capable of withstanding a Titan and Mars aerocapture. As materials are improved, i.e., made stronger or able to withstand higher temperatures, the diameter can be adjusted to minimize system mass. The spacecraft orbiter, lander, and propulsion stage presented in this section were defined and provided to Lockheed Martin by NASA-MSFC for a Titan aerocapture mission.

A. Inflatable Aeroshell Design Description

Our design efforts considered concepts of lightweight aerodecelerator configurations that provide for efficient spacecraft packaging. The design concepts achieve the lowest mass fraction that meets the requirements of aerodecelerator shape, packaging, payload and launch vehicle interfaces, separation systems, thermal environments, launch and aerocapture loading, required stiffness, and aeroelastic performance.

The Titan reference mission aerodecelerator inflatable aeroshell design features a lightweight, rigid nosepiece with an attached deployable aeroshell structure around its perimeter. The rigid nosepiece is the focal point for the interfaces of the launch vehicle, payload, inflatable and its associated hardware. It is at the location of highest heating and is covered by a rigid TPS. The diameter of this rigid structure is driven by the payload envelope and launch vehicle interfaces. The structure is constructed of lightweight composite sandwich structure which is ring stiffened at the deployable attachment, and is reinforced at the payload and launch vehicle interfaces. Thru-heatshield penetrations for the launch vehicle interface are present and are similar to Genesis and Viking penetration designs. The propulsion module connects to the rigid nosepiece with separation bolts. The deployable extension provides for additional aerocapture surface area. Heating rate, material temperature limits/TPS performance, payload volume constraints, aeroelastic performance, and mass drive the shape and size. The deployable is attached to the rigid nosepiece at the outer composite sandwich structure. For launch, the deployable system is stowed in a minimum volume configuration around the edge of the rigid nosepiece. Figure 7 illustrates the key design features of a Titan aerocapture spacecraft.

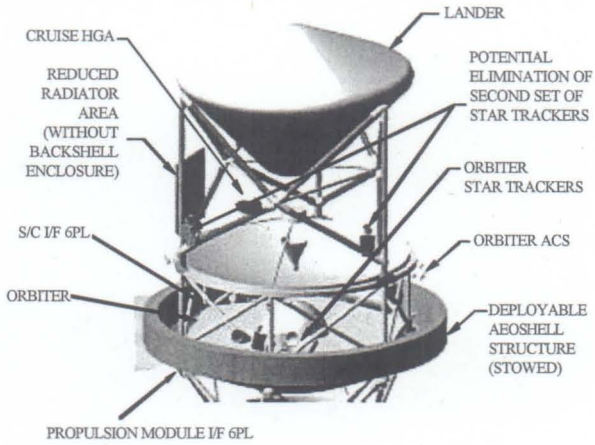

Figure 7. Titan Aerodecelerator Key Features

All mission phases, including launch, interplanetary cruise, aerocapture, and payload deployment are easily accommodated with this design. In the launch configuration, Figure 8, the payload interface to the propulsion module is a direct load path through the rigid nosepiece. During interplanetary cruise, Figure 9, payload heat rejection can be accomplished with aft-facing space-viewing radiators and the spacecraft antenna can be used for communications. Prior to aerocapture, the Titan Lander and its support structure are released, as well as the propulsion module. The deployable aeroshell structure is released from its stowed configuration and is inflated. During aerocapture, a combination of payload center of gravity offset and roll control via thrusters allows for corridor control. Other control options, including shape morphing is further discussed later in this paper. After aerocapture the payload is released from the aerodecelerator through a separation system at the rigidnose/payload interface.

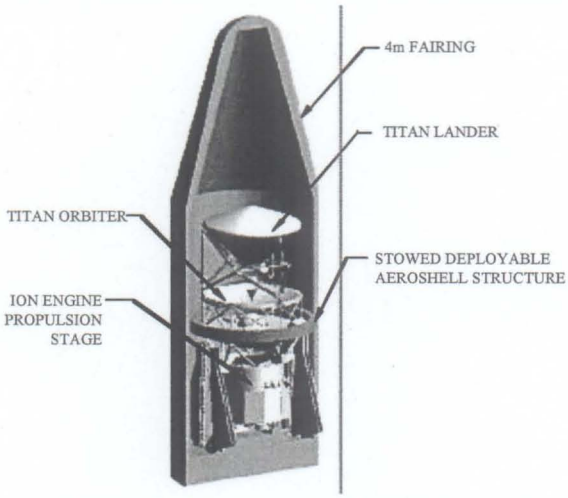

Figure 8. Titan Aerodecelerator in Launch Configuration

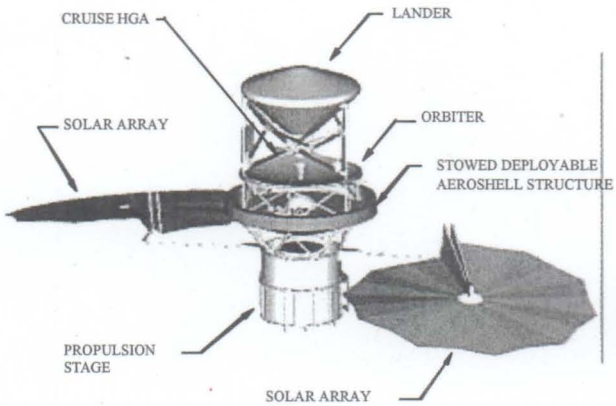

Figure 9. Titan Aerodecelerator Cruise Configuration

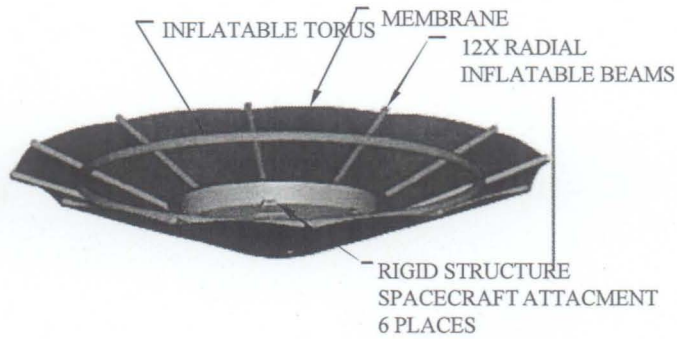

Figure 10. 7.5m Inflatable Aeroshell Components

The Deployable Aeroshell Structural concept design is illustrated for a 7.5m diameter deployable in Figure 10, and a 15m concept in Figure 11. Each is comprised of twelve inflatable beams (or spars) in a radial arrangement and is further supported by an inflatable torus located at approximately two-thirds of the length of the beam from the beams attachment to the spacecraft. A cord connects the beam-ends to complete the support of the membrane.

The beams are attached to an extended edge of the aeroshell via pin and lugs that allow the beam to pivot, i.e. no bending moment is reacted at the attachment. Loading of the structure was simplified to a uniform pressure on the forward surface sufficient to decelerate a 1,000 kg mass at 2.2 g's. The reaction at the torus attachment was solved for zero end moment at multiple attachment locations, and the location that resulted in minimum bending was determined. This was also the case of equal and opposite positive and negative moments, and was used to determine the location of the torus ring.

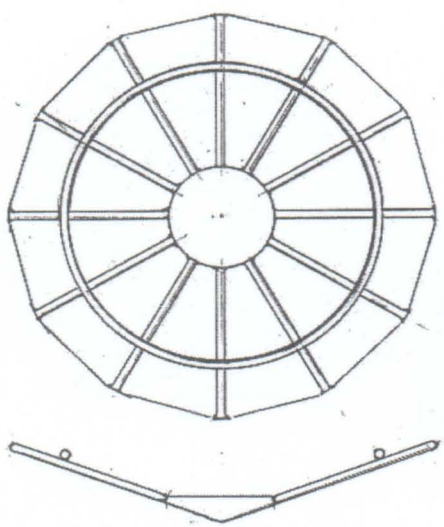

Feature		Unit
Spacecraft Diameter	3.75	m
Deployable Diameter	15	m
Length of Beam (spoke)	5.6	m
Axis-Beam Angle	70	deg

Figure 11. 15m Inflatable Aeroshell Structure

Table 2 presents the dimensions of the two diameter configurations analyzed for a Titan aerocapture mission.

Table 2. Dimensional Summary of Two Inflatable Aeroshell Options

Deployable Diameter, m	Length of Beam (Spar), m	Axis-Beam Angle, deg.	Torus Diameter, cm	Spar Diameter, cm
15	5.6	70	35.6	25.4
7.5	1.9	70	15.2	10.2

B. Candidate Materials

Two different material solutions were considered for each diameter size, a high TRL 7.5m concept with materials that have been previously flight-demonstrated and are commercial-off-the-shelf (COTS), and a lower TRL 15m design that would require additional material development and demonstration before application. Details of the selection, testing and evaluation of the inflatable aeroshell material candidates are presented in the Reference 2 companion paper.

C. Inflatable Aeroshell Aerothermal Analysis

Two primary aerothermal tasks were undertaken for our inflatable aeroshell design. The first was the quantification of backshell/cargo heating rate for the various inflatable aeroshell diameters, and the second was assessment of the heatshield heating for the cantilevered spar inflatable aeroshell design.

A series of axisymmetric CFD cases were simulated using LAURA[4] to compute full-body heating rates for our baseline 7.5m and 15m designs, as well as for an additional 3.75m diameter case. Calculated heating rates for the Titan aerocapture case are presented in Figure 12. Included in the graph are both convective and radiative components for 3.75m, 7.5m, and 15m diameter aeroshells. The contours and streamlines from the analysis are presented in Figure 13, and the heating rate as a function of non-dimensional radial position for a zero angle-of-attack is given in Figure 14. The zero-angle-of-attack condition represents worst-case backshell heating due to the presence of an aft disc-shock. Once even a small angle of attack is assumed (<5deg) this shock disappears, and backside-heating rates are significantly reduced. The lack of symmetry about the longitudinal axis in the current design, and the unknown spacecraft geometry necessitated creation of an average inflatable aeroshell outer mold line for the purpose of this study. The inflatable aeroshell geometry was chosen to encapsulate reasonable lateral and longitudinal extents of a spacecraft with a hypothetical backshell. The shoulder radius is consistent with the diameter of the inflated spars so that heating rates to the structure can be assessed. The chosen geometry for the aerothermal analysis is shown in the Figure 15.

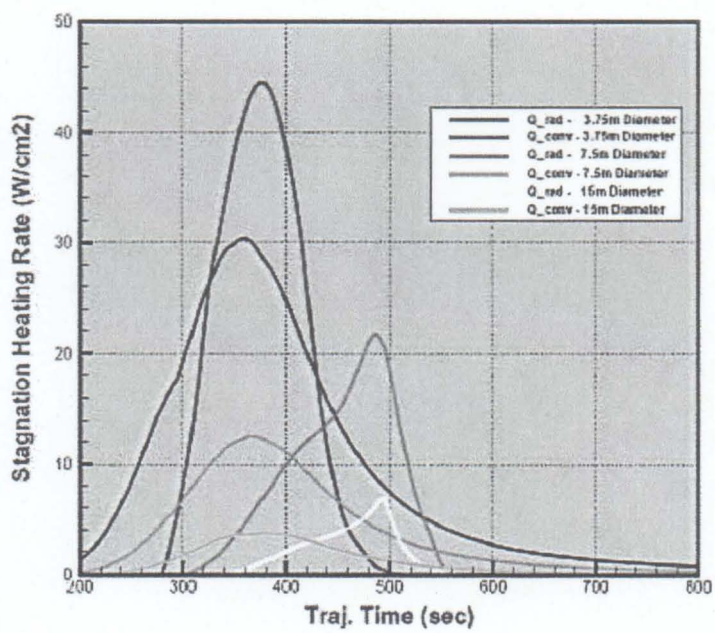

Figure 12. Convective and Radiative Stagnation Heating relative to Diameter

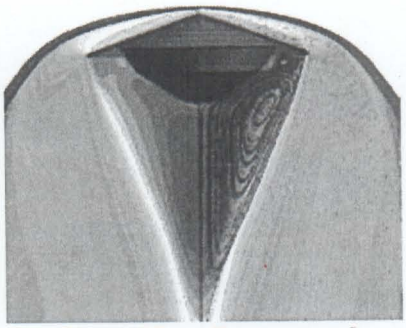

Figure 13. Contours and Streamlines from CFD Analysis

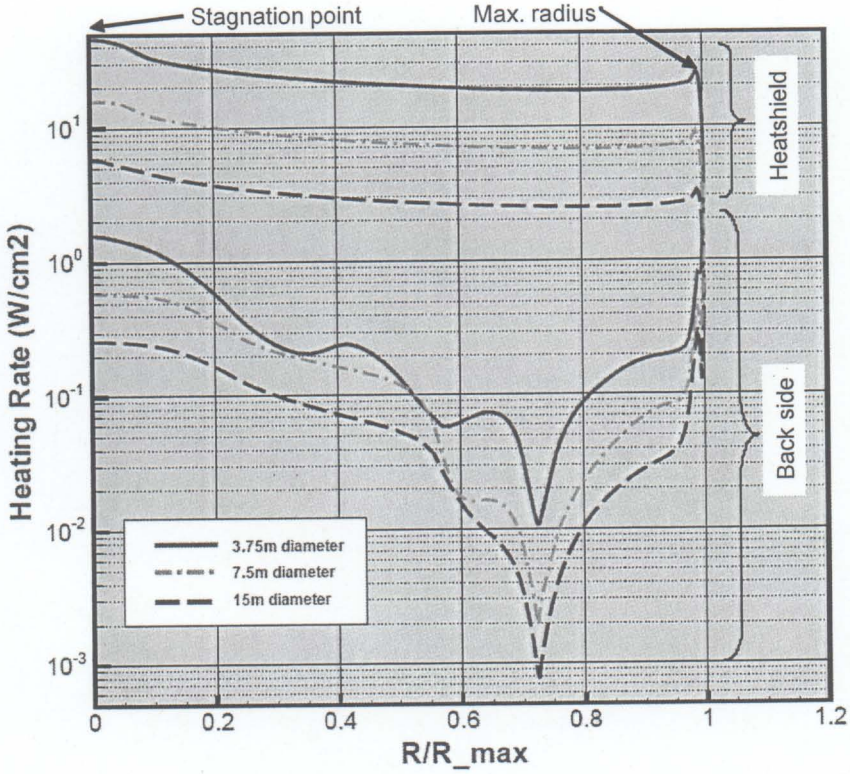

Figure 14: Full Body Heating Rate at Peak Heating for Aerocapture Mars at 0 de AoA

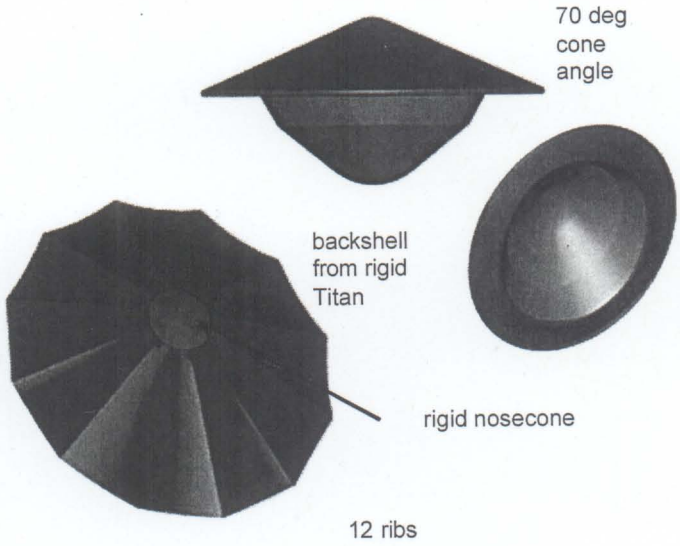

Figure 15. Geometry For Aerothermal Analysis

The cantilevered spar design introduces "ridges" in the forebody surface of the inflatable aeroshell. It was expected that this non-symmetric forebody would result in areas of high local heating at the spars (high points). In order to quantify this effect, a set of CFD runs were completed, using the aeroloaded surface geometry for the forebody only. Since the vehicle is designed to fly at an angle-of-attack, 0 deg, 5 deg, and 15 deg?conditions were simulated. Based on initial results, the highest heating rate on the forebody was still located at the stagnation point. Local heating accentuation at the spars is approximately 50% relative to neighboring areas (and is bounded by the stagnation point heating). The peak heating, of approximately 12.5 W/cm2, for our 7.5m design at an Angle-of-Attack (AoA) of 15 degrees is shown in Figure 16 and 17.

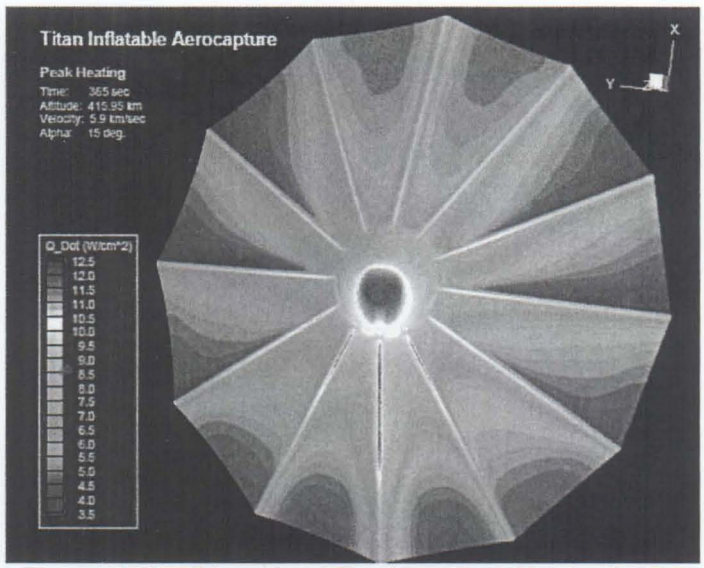

Figure 16. Non-Dimensional Heating at Peak Heating for 7.5 m Diameter 15 deg AoA

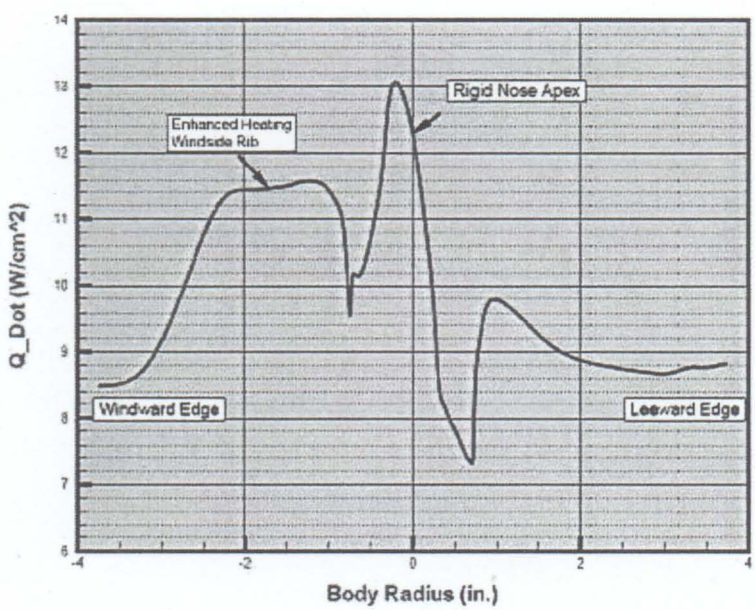

Figure 17. Non-Dimensional Heating at Peak Heating for 7.5 m Diameter 15 deg AoA

V. Rigid vs. Inflatable Comparison

A. Titan Inflatable vs. Rigid Comparison

All rigid aeroshell information for the Titan mission is based on mass data from Reference 3. This rigid aeroshell uses materials and construction techniques similar to that used on the Mars Exploration Rovers (MER) aeroshell program. Since a Titan mission would most likely include a complex design of lander(s), telecommunications, etc., we chose to compare only the rigid and inflatable aeroshells and not take advantage of other potential systems advantages. The mass comparison of the two options is presented in Table 3. Note that this table has two versions of an inflatable aeroshell. The higher TRL 7.5 m diameter system using COTS materials[2], and the lower TRL 15 m diameter system using a polyimide type membrane material. As seen in Table 3, the higher TRL inflatable aeroshell compares favorably with the rigid aeroshell. In fact, the mass of the larger 15m system is actually lower than either the rigid or the 7.5m design. This is a result of the possible use of ultra thin lightweight polymides because the heat rates a considerably lower when using the larger diameter inflatable aeroshell system for aerocapture.

Table 3. Titan Rigid Aeroshell Master Equipment List Vs. Inflatable Equipment List

Rigid		Higher TRL Inflatable		Lower TRL Inflatable	
Component	mass (kg)	Component	mass (kg)	Component	mass (kg)
Heatshield	**194.2**	**Rigid Nosecone**	**107.3**	**Rigid Nosecone**	**102.3**
Honeycomb structure	45.47	Structure with ring	58.2	Structure with ring	58.2
Perimeter ring filler	12.71	TPS	17.9	TPS	12.9
SLA5612V TPS	94.92	S/C interface fittings	31.2	S/C interface fittings	31.2
TPS film adhesive	4.9	**Other Aeroshell**	**40.9**	**Other Aeroshell**	**31.6**
Seals	0.53	Torus	4.0	Torus	7.0
Kapton blanket	0.83	Membrane film	21.6	Membrane film	3.6
Backshell sep fittings	3.62	Membrane barrier	3.5		
S/C prop module sep ftgs	31.19	Axial straps	1.4	Axial straps	1.4
Backshell	**92.5**	Zirconia insulation	2.7		
Honeycomb structure	47.04	Spars	5.2	Spars	17.1
SLA5612S TPS	21.41	Spar K1100	1.9	Spar K1100	1.9
Thrusters & fittings	14.16	Beam ends	0.7	Beam ends	0.7
Vents (2)	1.61	**Miscellaneous**	**3.1**	**Miscellaneous**	**3.1**
Radiators (2)	6.82	Gas inflation system	1.4	Gas inflation system	1.4
Probe sep seals (3)	1.46	Gas	0.9	Gas	0.9
Total rigid structure	**286.7**	Container	0.8	Container	0.8
		Total	**151.3**	**Total**	**137.0**
		Total w/ 30% contingency	**196.7**	**Total w/ 30% contingency**	**178.1**

B. Inflatable Aeroshell Scaling

An interesting feature of our inflatable aeroshell is its scalability with heating rate. As shown in Figure 18 the differing environments of various mission options can be translated into a reduced inflatable aeroshell diameter. For instance, if a 7.5 m diameter system is designed for Titan, it can be reduced to ~5.5 m for a Mars aerocapture mission (with no aerobraking) and ~4.75 m for aerocapture and subsequent aerobraking mission.

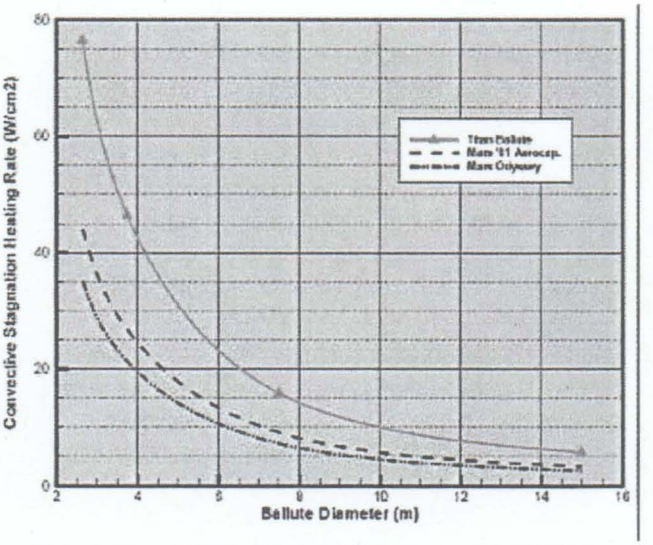

Figure 18. Heating Rate Vs Diameter for Multiple Diameter Cases

C. Rigid vs. Inflatable at Mars Comparison

During the early stages of the Mars Odyssey (Mars '01) program, a rigid aeroshell with aerocapture was considered. The following is a comparison of a higher TRL 7.5 m diameter inflatable aeroshell with the Mars Odyssey Preliminary Design Review (PDR) aerocapture design and the as-flown Odyssey design (propulsive Mars orbit insertion with bi-prop propulsion system). Drawings of the two options, including the inflatable

option during various mission phases, are presented in Figure 19.

For a Mars aerocapture, the deployable aeroshell can be constructed of the same materials as for a Titan aerocapture[2], because these materials are at a TRL that could have enabled a near term mission. The rigid nose-piece would be constructed of a graphite/PC sandwich structure with a rigid TPS. An aerocapture Mars insertion would have allowed the Odyssey spacecraft to reduce required fuel and number of tanks. The spacecraft would also have been able to use its power and communication systems without impediments during cruise.

Table 4 presents a comparison of the calculated and actual masses of the inflatable and rigid options. The inflatable option masses are based on our preliminary sizing analysis. The rigid option is based on PDR values with contingency added. As can be seen, the inflatable aerocapture option compares favorably to the as-flown option. The reduced mass could have been used to add payload or, conversely to choose a smaller/less expensive launch vehicle.

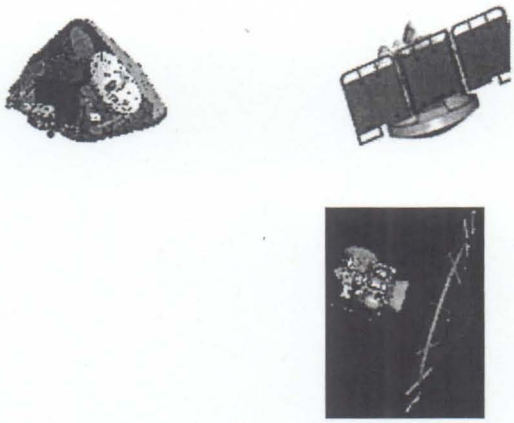

Figure 19. Mars Odyssey on Rigid or Inflatable Aeroshell

Table 4. Comparison of Mars Odyssey Spacecraft with Rigid and Inflatable Aeroshells

From Mars '01 PDR		Spar with Rim estimate	
Rigid		Inflatable (5.5 m)	
Component	mass (kg)	Component	mass (kg)
Cruise Stage	**74.9**	**Rigid Nosecone**	**43.5**
Power	6.1	Structure with ring	29.7
Harness	4.6	TPS	6.7
Telecom	5.6	S/C interface fittings	7.1
Mechanisms	6.2	**Other Aeroshell**	**26.4**
Structures	38.9	Torus	2.5
Thermal	3.1	Membrane film,	13.8
GN&C	8.0	Membrane barrier,	2.2
Ballast	2.4	Axial straps	0.9
Aeroshell	**184.7**	Zirconia insulation	1.7
Payload	4	Spars	3.3
Harness	6.8	Spar K1100	1.2
Telecom	0.5	Beam ends	0.7
Mechanisms	22.8	**Miscellaneous**	**2.4**
Structures	141.4	Gas inflation system	1.2
Thermal	4.4	Gas	0.5
Ballast	4.8	Container	0.7
Total rigid structure	**259.6**	**Total**	**72.2**
		Total w/ 30% contingency	**93.9**

VI. Inflatable Aeroshell Guidance Accuracy and Shape Morphing Techniques

An orbit insertion accuracy analysis based on errors in deflected shape of our inflatable aeroshell baseline design concept was performed. As described earlier, the 7.5-meter "spar with rim" inflatable aeroshell design was selected because of its efficient structure and gas usage, good heat transfer properties, and potential for shape morphing. The results of our guidance analyses show that our spar with rim inflatable design performs remarkably similar to a rigid structure for Titan aerocapture; therefore, proven rigid aeroshell entry guidance techniques can be utilized for our inflatable design.

Much analysis has focused on "drag modulation" as a method for controlling aerocapture trajectories and compensating for atmospheric variations and navigational errors. Drag modulation, in this context, is strictly a stepwise reduction in drag by jettison of a drag device (i.e. area jettison). Our inflatable aeroshell AID concept is certainly compatible with drag modulation, however, drag modulation in this context has the disadvantage that control margin comes at the price of higher peak forces and a higher peak heat flux. This is a consequence of the fact that the only control action is "up," therefore, the trajectory must be flown lower through a denser portion of the atmosphere to achieve the desired deceleration. A nominal trajectory using lift modulation will jettison the drag device half-way through its atmospheric flight, meaning that it would have been capable of approximately twice the delta-V and that extra capability was the price of the control function. Control methods that provide "up", "down", and "side to side" control (demonstrated during the Apollo program) have a lower cost in terms of decelerator efficiency and provide a means to steer and correct for out of plane errors that simple drag modulation can not simply achieve.

Our chosen spar with rim inflatable design easily lends itself to active control as described above. The concept is relatively stiff structurally with minimum edge deflection and therefore behaves much like a rigid system. As a result of this behavior, we chose to pursue guided entry over drag modulation as the low risk, simple, and most accurate method for aerocapture control.

A. Accuracy Analysis Inputs

The guidance accuracy analysis used baseline mass properties and configuration inputs from Section II of this paper. Computations Fluid Dynamic (CFD) computations were performed on an estimated aero-loaded forebody shape for several angles-of-attack. The assumed geometry included a maximum membrane deflection of 7.6 inches in the axial direction, and no deflection of the spar members. In the interest of making the computational requirements manageable, a 5 species model including only nitrogen and ionized nitrogen species was used for the 3-DOF forebody computations. Based on comparisons to axisymmetric CFD with the fill 18-species Titan model, use of a 5species model was believed to have negligible effect on the surface pressure. Using the results of the forebody computations, surface pressure profiles were generated for 0, 5, and 15 degrees AoA.

Figure 20 presents the pressure distribution across the inflatable forebody for the 15 deg worst case. As is evident, the pressures are less than those seen by rigid heatshields because of the large 7.5 m diameter of our inflatable.

Pressure distributions were used to generate the resulting deflected inflatable aeroshell shape for 0, 5, and 15 deg angle-of-attack cases. Displacements at the end of the spars and at the outer edge of the membrane midpoint for each AoA case were developed.

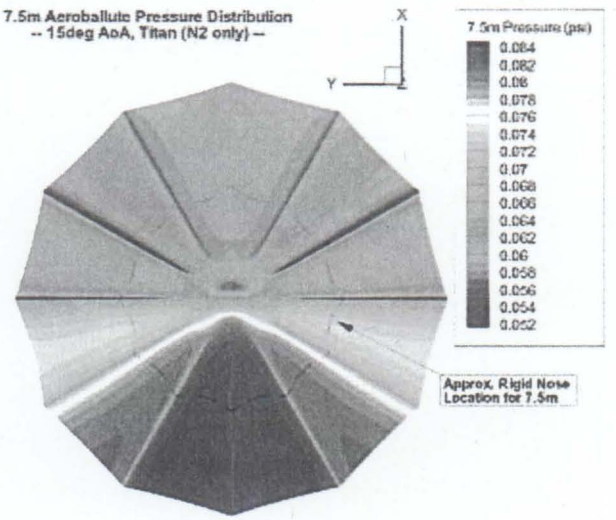

Figure 20. Pressure Distribution Profile at 15 deg AoA

Using the results of the structural analysis, changes in aerodynamic coefficients due to deflections can be computed. Change in frontal area, trim angle of attack, and drag coefficient were calculated for the 15 degree AoA deflected aeroshell shape. The 15 degree case was selected to match the angle of attack flown by the rigid aeroshell because this angle-of-attack was determined to be worst case since it resulted in maximum angle-of-attack displacements.

The computed shift in aerodynamic coefficients was used to generate the necessary uncertainty parameters for the accuracy analysis. Figures 21 present deflection data for the 15 deg worst case Angle-of-Attach.

Previous fabrications have demonstrated beam construction/manufacturing tolerances can be controlled to approximately 1/8 inch over a 60 ft length. This uncertainly is very small considering our size and has negligible impact on our accuracy analysis. Therefore, manufacturing tolerances were not included as part of the accuracy analysis.

Edge Displacements of Deployable

Membrane	R Disp in.	Z Displ in.	Spar	R Disp in.	Z Displ in.
M1	-2.774	6.420	S1	-1.142	2.772
M2	-2.774	6.421	S2	-1.040	2.745
M3	-2.704	6.278	S3	-0.973	2.574
M4	-2.529	5.917	S4	-0.891	2.367
M5	-2.384	5.613	S5	-0.815	2.173
M6	-2.517	5.259	S6	-0.777	2.074
M7	-2.517	5.259	S7	-0.782	2.088
M8	-2.384	5.613	S8	-0.777	2.074
M9	-2.529	5.917	S9	-0.815	2.173
M10	-2.704	6.278	S10	-0.891	2.367
M11	-2.774	6.421	S11	-0.973	2.574
M12	-2.774	6.420	S12	-1.040	2.745

Displacements at end of Spars (Si)
And outer edge midpoint of Membrane (Mi)

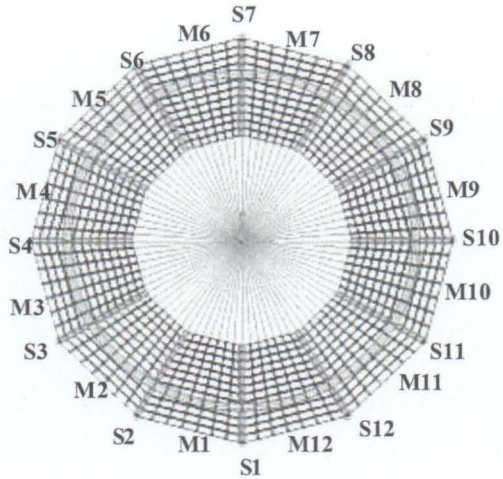

Figure 21. 7.5-m Deployable Aeroshell Displacements at 15 Deg AoA

B. Accuracy Analysis Results

The results of the mechanical and coupled aerodynamic study were incorporated into our closed-loop aeroassist simulation (CLAAS). This was the same Guidance Navigation and Control (GN&C) software utilized in Phase 1 of our AAT rigid aeroshell capture study (Reference 3). Where possible the same assumptions were used as in the rigid aeroshell study[3] to permit side-by-side comparisons of the results. The following assumptions were used for the inflatable aeroshell AID accuracy simulations:

- 1200 kg entry mass
- 7.5 m diameter
- 1700 km exit orbit apoapsis target (same as rigid study)
- 375 km Encounter periapsis (required to satisfy Items 1, 2, and 3) – this is in contrast to the 296 km used for the smaller (3.65 m) rigid aeroshell
- 2% Area change due to deflected shape
- 0.7 deg angle of attack shift due to deflected shape
- Aerodynamic coefficient change (Cd & Cl) due to 2.7 deg change in deflected average cone angle
- 5% overall aerodynamics uncertainty (vs. 2.5% used for rigids)
- 25% reduction in roll angular acceleration due to assumed reduction in torsional stiffness

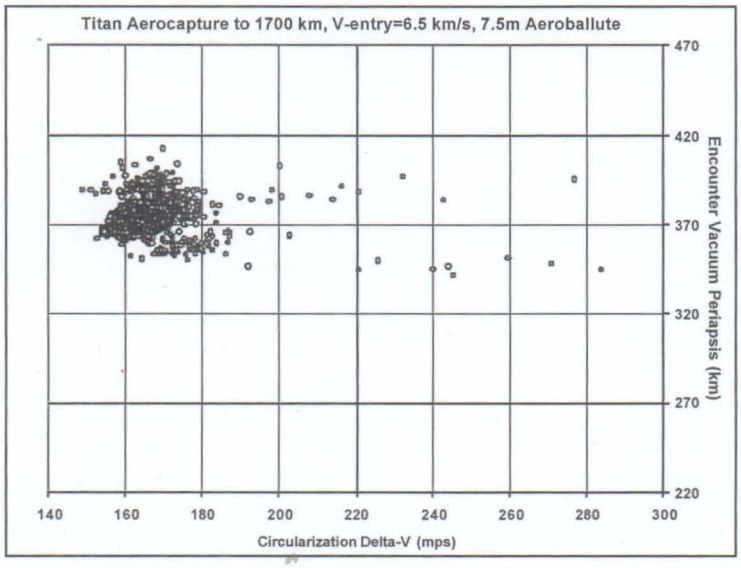

Figure 22. Aerocapture Circularization Velocities for 7.5-m

A 1000 case closed-loop Monte Carlo was performed using this list of inflatable aeroshell characteristics. The simulation utilized bank angle control of the positive lift vehicle in the presence of navigation and atmospheric errors (Reference 3) with the following two key results:

1) Apoapsis error had a standard deviation of 176 km. This is in contrast to a value of 97 km for the rigid vehicle.
2) Circularization trim delta-V requirements (fixing both apoapsis and periapsis errors) had a 99% maximum magnitude of 240 mps. The corresponding value for the rigid aeroshell was 238 mps[5]. These results are shown in Figure 22.

Although the inflatable aeroshell had aerocapture exit errors twice that of the rigid vehicle, the fact that its natural periapsis was 80 km higher in the Titan atmosphere saved it a corresponding amount of circularization delta-Velocity. Simply put, the 80 km of increased error was roughly balanced by the 80 km of higher periapsis achieved by the inflatable aeroshell's larger diameter.

Thus the closed-loop guidance study showed that even with larger natural errors inherent in the more flexible structure of a large inflatable aeroshell, the orbital mechanics gains of aerocapturing at higher altitude tended to balance out on average. Thus the circularization propellant required for the two systems was roughly equal.

C. Guidance Implementation Methods

Alternate lift vector control implementation methods can be used to provide the means for actively guiding our inflatable aeroshell during atmospheric capture. This section provides an overview of various lift vector control methods that could be use for our inflatable aeroshell concept. Further study of each method is needed before a final optimum down select can be determined.

1. Shape Morphing

Lift vector control is a method in which a fixed lifting configuration is controlled by rolling the body to point the lift vector up, down, or side to side as needed. A lifting configuration can be achieved by either a center of gravity (CG) offset or by an asymmetric shape. Since the effect of CG offset on trim angle is diluted by a large decelerator, a symmetric shape will be the most effective approach for inflatable aerocapture decelerators needing to generate lift.

The AID inflatable aeroshell concept suggests another possible control approach, known as lift modulation. A variety of lift modulation approaches are possible in association with the AID concept. In general they would all start with a deployed non-lifting configuration and then, when Guidance Navigation and Control (GN&C) determines that lift is needed for trajectory control, the shape could be "morphed" to a lifting configuration.

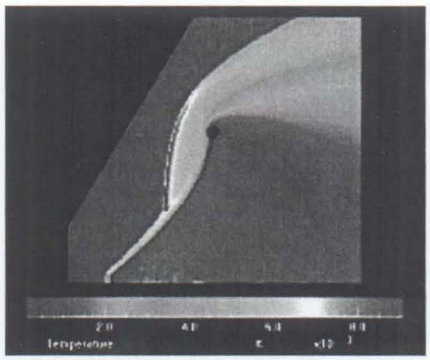

Figure 23. Shock Interactions on Concave Surface.

A number of shape-morphing approaches are possible, the simplest of which for discussion purposes, is to deflate one or more of the radial beams. This creates enough asymmetry to trim the spacecraft at some incidence and thereby generate lift. This is extremely simple and robust to implement, with the largest impact being designing for the change in temperature distribution in the morphed state. Other shape-morphing approaches are feasible, including actively bending selected radial beams using inflatable elements as pneumatic actuators.

Our inflatable aeroshell configuration is particularly well suited to shape morphing because the resulting lifting configurations do not result in forward surface wrinkling or concave surface contours. Increased concave curvature also has the unwanted consequence of producing shock-shock interactions and hot areas on the membrane surface as shown in Figure 23. The inflatable aeroshell configuration has the advantage that morphed shapes are possible without introducing concave surface curvature.

Conventional CG offset control methods, used in today's rigid body entry systems to produce lift during entry, can also be used with inflatable aeroshells.

VII. Applicability of Inflatable Aeroshell to Mars Direct Entry

Although our inflatable aeroshell was designed for a Titan aerocapture, Lockheed Martin performed a study to determine the aeroshell's applicability to a Mars direct entry. This study utilized our baseline Titan aerocapture spar with rim inflatable aeroshell configuration and simulated a single nominal entry trajectory using a state vector from the Mars Scout Phoenix program. Results from our nominal entry trajectory simulation determined the heat rate and entry loads for our inflatable aeroshell during a Mars entry descent. Table 5 presents the initial conditions used for the simulation and compares key parameters of our inflatable aeroshell with the Phoenix Mars Scout rigid aeroshell.

Table 5. Mars Entry Initial Conditions

	Inflatable Aeroshell	Rigid Phoenix Aeroshell
Total Entry Mass	500 kg	600 kg
Entry Angle-of-Attack	15.5 deg	0 deg
Flight Path Angle	-13 deg	-13 deg
Entry Altitude	125 km	125 km
Ballistic Coefficient	7.7	66
Aeroshell Diameter	7.5m	2.65m

A. Mars Entry Trajectory

Results of our Mars entry simulation determined that our inflatable aeroshell design is well suited for a Mars direct entry mission. Some modifications would be needed to adapt our inflatable aeroshell for Mars entry primarily due to the increased pressure loads on the larger aeroshell structure. Our inflatable aeroshell has the advantage of decelerating at much higher altitudes than is possible with a rigid aeroshell. The increased deceleration occurs primarily because of the inflatable aeroshell's lower ballistic coefficient when compared to a smaller rigid aeroshell.

Figure 24 presents the altitude and aerodynamic loads on the inflatable aeroshell vs. time during Mars entry. Maximum aerodynamic loads of 11.5 g's are experienced, which are considerably higher than the loads experienced during a Titan aerocapture. Therefore, higher inflation pressures and additional structural reinforcements would need to be applied to our inflatable aeroshell to withstand Mars entry loads.

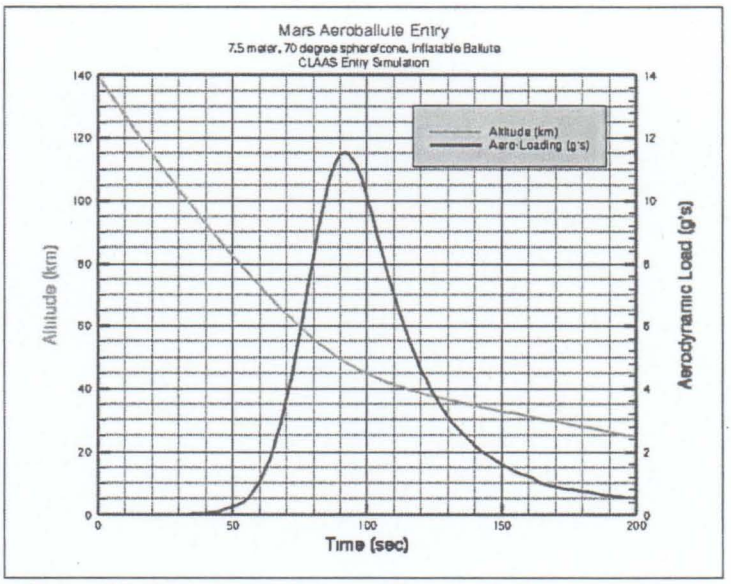

Figure 24. Altitude and Load vs. Time for Inflatable Aeroshell Mars Entry Trajectory

B. High Altitude and Mach Parachute Deployment Conditions

For our inflatable trajectory, the parachute deployment altitude is considerably higher than is possible for conventional rigid aeroshells. The Mars Viking Lander program performed parachute Balloon Launched Decelerator Tests (BLDT) to establish an acceptable Mach range for parachute deployment on Mars[6]. All Mars mission since Viking have remained within the parachute deployment Mach range defined by the Viking BLDT test program because none have been able to justify the added expense of re-visiting the possibility of deploying heavier payloads at higher Mach numbers. Even if parachute drop tests revealed that higher Mach deployments are possible, the interaction of the aeroshell/parachute dynamics at Mach>~2 preclude any advantage because the parachute does not supply the needed drag to slow the vehicle until lower velocities are attained.

In order to land heavier vehicles on Mars, a decelerator that reduces velocity at considerably higher altitudes is needed. An inflatable aeroshell provides this advantage because it's reduced ballistic coefficient increases drag at high altitudes, thus allowing heavier payloads to deploy their parachutes at very high altitudes and low Mach numbers. When using an inflatable aeroshell, the vehicle is at a lower velocity earlier in its trajectory, i.e. higher altitude because the inflatable has provided additional drag early in the entry phase. As a result, parachute deployment velocities of approximately Mach 1.5 are achieved at higher altitudes (~20.7 km) as shown in Figure 25, instead of a lower ~10 km parachute deployment altitude for the Phoenix rigid aeroshell entry. Since the velocities are lower early during descent, this opens the possibility of using larger parachutes, allowing heavier payloads to land on Mars than is currently possible with rigid aeroshells.

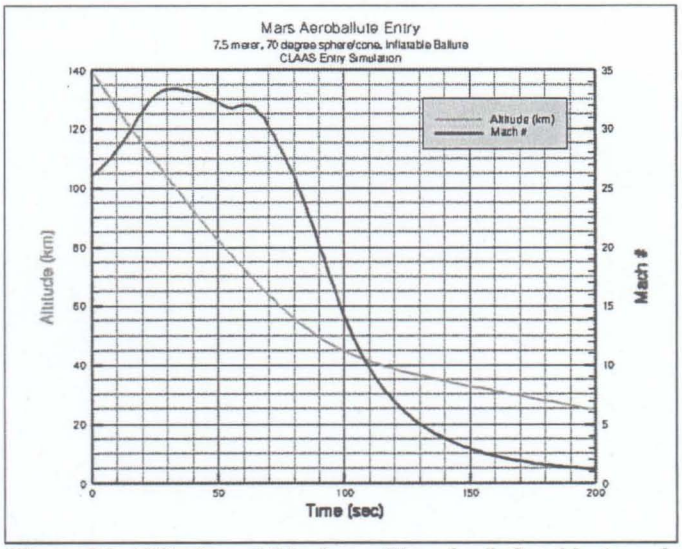

Figure 25. Altitude and Mach vs. Time for Inflatable Aeroshell Mars Entry

Heat rates experienced during Mars entry are within the limits of our inflatable aeroshell material as presented in Figure 26. Using our high TRL materials, the inflatable aeroshell can easily withstand the Mars entry heat flux of approximately 12.8 W/cm2. Our high TRL material has been tested to heat rates of 36 W/cm2 and temperatures of 1000 deg C[2].

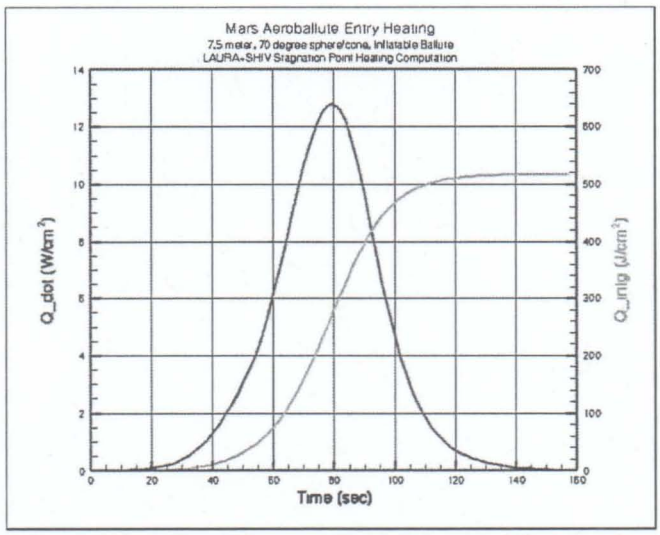

Figure 26. Heat Flux and Total Integrated Heating for Mars Entry

C. Structural Loads for Mars Entry

Our inflatable aeroshell structure was designed for Titan aerocapture loads of 2 to 3 g's. Considerably higher Mars entry loads of 11.5 g's are experienced during Mars entry. Such high entry loads translate into large forces (highlighted in yellow) on the inflatable aeroshell surface as presented in Table 6.

Table 6. Force on Inflatable Aeroshell During Mars Entry

Loads on Structure	
Fatot=	26400 lbf
Faaid=	19800 lbf
Aaid=	33.1 m^2
	51358 in^2
Pavg=	0.386 psi
N=	12
Fatot/N=	2200 lbf
Faaid/N=	1650 lbf

This force requires the inflatable structure be stiffened in order to withstand higher aerodynamic entry loads. One method to increase stiffness is to add pressure within the beams and torus, without necessarily increasing their diameters. Our design is flexible and scaleable therefore, pressure can be increased to provide the required structural stiffness. The pressure within the beams and torus would need to be increased from approximately 44 psi for a Titan aerocapture trajectory to a pressure of approximately 245 psi (Table 7) for a Mars entry. Such high pressure is within the maximum capability of our inflatable aeroshell design.

To accommodate the increased pressure, thicker materials would need to be utilized for the beams and torus. The additional mass of the spar and torus, along with the additional mass of a gas generator or gas container would increase the overall mass of the inflatable for a Mars entry from approximately 37.3 Kg to 71.1 Kg. Table 8 presents the increase in mass of the beams, torus, and gas for the 7.5m inflatable design compared with the Titan aerocapture mass. The majority of the mass increase is due to the additional fibers within the torus and beams and a larger gas container or gas generator that would be required to inflate the aeroshell to a higher pressure.

Table 7. Pressure Required for 7.5m Diameter Mars Entry Aeroshell

Pressure Required	
d_beam=	4 in
d_torus=	6 in
P_beam=	245.0 psi
P_torus=	243.6 psi

Table 8 assumes our high TRL 7.5m diameter baseline membrane material is adequate for a Mars entry mission. Test data from Reference 2 verifies that our high TRL membrane ML material can withstand heat rates of up to 36 W/cm^2, which are considerably higher than the expected 12.8 W/cm^2 for a Mars entry, therefore we did not increase the membrane mass for a Mars entry.

Table 8. Mass Increase for 7.5m Diameter Inflatable Aeroshell Mars Entry

Item	Titan AID Mass (kg)	Mars AID Mass (kg)
Torus	4	14
Beams	5.9	19
Surface Membrane	25.1	25.1
Gas	0.9	5
Inflation System	1.4	8
Total Mass	37.3	71.1

VIII. Conclusion

The Lockheed Martin team studied various aerocapture inflatable decelerators and compared a baseline inflatable aeroshell system to a rigid system for both a Titan and Mars aerocapture mission. We concluded that a relatively high TRL inflatable decelerator trades well with existing rigid decelerators. Even more promising was an inflatable decelerator made with advanced (lower TRL) materials[2].

After completing detailed trade studies of various inflatable aeroshell designs, our team selected a baseline inflatable aeroshell design that is flexible, robust, and provides a low risk solution for a Titan aerocapture. Our relatively high TRL 7.5m inflatable aeroshell offers significant mass savings over a rigid aeroshell when comparing at an aeroshell level and even more so at a system level. More advanced materials would allow additional mass savings if an increased 15m aeroshell diameter is utilized.

Our inflatable aeroshell design may result in the elimination of a backshell even when using modest forebody diameters. Elimination of the backshell would allow for existing orbiter subsystems including power, thermal, and

communication to be used during the cruise phase. The total number of spacecraft subsystems would be decreased, thus complexity and cost could be reduced.

Our inflatable aeroshell allows for extensive mission and destination flexibility and scalability. Forebody diameter and associated heat rates can easily be increased or decreased to accommodate multiple entry or capture scenarios. Alternate material options ranging from flight proven to advanced developments can be incorporated for both the spar/torus structure and the forebody fabric with minimal impact on the overall concept, however with potential for significant weight reduction.

CFD and thermal analyses indicate that "hot spots" due to uneven cross flow surfaces are manageable at angles of attack between zero to at least 15 degrees.

An orbit-insertion accuracy analysis based on deflected shapes of the down-selected AID inflatable aeroshell configuration, and concepts for membrane shape control/steering was completed. Results from the orbit-insertion accuracy analysis revealed the following: 1) highly efficient lift vector control guidance is feasible and attractive for our inflatable concept, 2) deflections associated with loads on the inflatable structure are relatively small and have minimum impact on guidance and control, 3) aerocapture injection accuracy is similar to that of a rigid aeroshell, 4) several promising concepts to achieve effective center of gravity (CG) offset are possible, and 5) lift vector control is effective for aerocapture as well as entry scenarios. Therefore conventional control and stability methods can be used to control the inflatable aeroshell during aerocapture or planetary entry.

Our inflatable aeroshell design is applicable for a Mars entry with relatively minor modifications. The use of an inflatable aeroshell is desirable for a Mars entry because current Entry Descent and Landing Systems (EDLS) technology does not allow heavy (greater than ~5 metric tons) payloads to land on Mars. High altitude high velocity decelerators such as our inflatable aeroshell provide the required deceleration at higher altitudes when compared to current rigid systems. This allows larger, more efficient parachutes to deploy at much higher altitudes and lower velocities, than is currently possible using rigid aeroshell technologies. Decelerating the vehicle early in the EDL phase provides an opportunity to land more mass and at higher elevations on the Martian surface. Mars mission such as the Mars Science Laboratory (MSL) are at the limit of using conventional rigid aeroshell/parachute technology, therefore new technologies such as inflatable aeroshells are important to consider for future science and eventual manned missions to Mars and beyond.

Acknowledgments

The work described in this paper was funded in whole or in part by the In-Space Propulsion Technology Program, which is managed by NASA's Science Mission Directorate in Washington, D.C., and implemented by the In-Space Propulsion Technology Project at Marshall Space Flight Center in Huntsville, Ala. The program objective is to develop in-space propulsion technologies that can enable or benefit near and mid-term NASA space science missions by significantly reducing cost, mass or travel times The authors would like to thank Bonnie James of NASA-MSFC, Michel Lesoinne of the University of Colorado, Boulder, and Richard Foss, Kevin Makowski and Ken Romeo of Lockheed Martin for their contribution to the AID program.

References

[1] Witkowski, A., and Brown, G.,, "Mars Deployable Decelerators Capability Roadmap Summary," IEEEAc Paper #1585, January 5, 2006.

[2] Kustas, F, et al, "Testing and Evaluation of Materials for an Aerocapture Inflatable Decelerator (AID)," to be presented at the Joint Army-Navy-NASA-Air Force (JANNAF) 54th Propulsion Meeting, May 14-17, 2007, Denver, Colorado.

[3] Willcockson, W, "Advanced Aeroshell Technology (AAT) Midterm Summary Report," DRD-1024MA-005, 19 Oct 2005

[4] Cheatwood, F. M., and Gnoffo, P. A., "A User's Manual for the Langley Aerothermodynamic Upwind Relaxation Algorithm (LAURA)," NASA TM 4674, 1995.

[5] Willcockson, W, "Final Summary Report, Aerocapture Aeroshell Technologies," AAT-06-0040, 31 January 2007

[6] Moog, R. D., Michel, F. C., "Balloon Launched Viking Decelerator Test Program Summary Report," NASA-CR-112288, 1973.