NASA/TM—2008-215056

# Halbach Magnetic Rotor Development

*Christopher A. Gallo*
*Glenn Research Center, Cleveland, Ohio*

February 2008

# NASA STI Program . . . in Profile

Since its founding, NASA has been dedicated to the advancement of aeronautics and space science. The NASA Scientific and Technical Information (STI) program plays a key part in helping NASA maintain this important role.

The NASA STI Program operates under the auspices of the Agency Chief Information Officer. It collects, organizes, provides for archiving, and disseminates NASA's STI. The NASA STI program provides access to the NASA Aeronautics and Space Database and its public interface, the NASA Technical Reports Server, thus providing one of the largest collections of aeronautical and space science STI in the world. Results are published in both non-NASA channels and by NASA in the NASA STI Report Series, which includes the following report types:

- TECHNICAL PUBLICATION. Reports of completed research or a major significant phase of research that present the results of NASA programs and include extensive data or theoretical analysis. Includes compilations of significant scientific and technical data and information deemed to be of continuing reference value. NASA counterpart of peer-reviewed formal professional papers but has less stringent limitations on manuscript length and extent of graphic presentations.

- TECHNICAL MEMORANDUM. Scientific and technical findings that are preliminary or of specialized interest, e.g., quick release reports, working papers, and bibliographies that contain minimal annotation. Does not contain extensive analysis.

- CONTRACTOR REPORT. Scientific and technical findings by NASA-sponsored contractors and grantees.

- CONFERENCE PUBLICATION. Collected papers from scientific and technical conferences, symposia, seminars, or other meetings sponsored or cosponsored by NASA.

- SPECIAL PUBLICATION. Scientific, technical, or historical information from NASA programs, projects, and missions, often concerned with subjects having substantial public interest.

- TECHNICAL TRANSLATION. English-language translations of foreign scientific and technical material pertinent to NASA's mission.

Specialized services also include creating custom thesauri, building customized databases, organizing and publishing research results.

For more information about the NASA STI program, see the following:

- Access the NASA STI program home page at *http://www.sti.nasa.gov*

- E-mail your question via the Internet to *help@sti.nasa.gov*

- Fax your question to the NASA STI Help Desk at 301–621–0134

- Telephone the NASA STI Help Desk at 301–621–0390

- Write to:
  NASA Center for AeroSpace Information (CASI)
  7115 Standard Drive
  Hanover, MD 21076–1320

NASA/TM—2008-215056

# Halbach Magnetic Rotor Development

*Christopher A. Gallo*
*Glenn Research Center, Cleveland, Ohio*

National Aeronautics and
Space Administration

Glenn Research Center
Cleveland, Ohio 44135

February 2008

*Level of Review*: This material has been technically reviewed by technical management.

Available from

NASA Center for Aerospace Information
7115 Standard Drive
Hanover, MD 21076–1320

National Technical Information Service
5285 Port Royal Road
Springfield, VA 22161

Available electronically at http://gltrs.grc.nasa.gov

# Halbach Magnetic Rotor Development

Christopher A. Gallo
National Aeronautics and Space Administration
Glenn Research Center
Cleveland, Ohio 44135

## Abstract

The NASA John H. Glenn Research Center has a wealth of experience in Halbach array technology through the Fundamental Aeronautics Program. The goals of the program include improving aircraft efficiency, reliability, and safety. The concept of a Halbach magnetically levitated electric aircraft motor will help reduce harmful emissions, reduce the Nation's dependence on fossil fuels, increase efficiency and reliability, reduce maintenance and decrease operating noise levels. Experimental hardware systems were developed in the GRC Engineering Development Division to validate the basic principles described herein and the theoretical work that was performed.

A number of Halbach Magnetic rotors have been developed and tested under this program. A separate test hardware setup was developed to characterize each of the rotors. A second hardware setup was developed to test the levitation characteristics of the rotors. Each system focused around a unique Halbach array rotor. Each rotor required original design and fabrication techniques. A 4 inch diameter rotor was developed to test the radial levitation effects for use as a magnetic bearing. To show scalability from the 4 inch rotor, a 1 inch rotor was developed to also test radial levitation effects. The next rotor to be developed was 20 inch in diameter again to show scalability from the 4 inch rotor. An axial rotor was developed to determine the force that could be generated to position the rotor axially while it is rotating. With both radial and axial magnetic bearings, the rotor would be completely suspended magnetically. The purpose of this report is to document the development of a series of Halbach magnetic rotors to be used in testing. The design, fabrication and assembly of the rotors will be discussed as well as the hardware developed to test the rotors.

## Introduction

The NASA John H. Glenn Research Center has a wealth of experience in Halbach array technology through the Fundamental Aeronautics Program. The goals of the program include improving aircraft efficiency, reliability and safety. The concept of a Halbach magnetically levitated electric aircraft motor will help reduce harmful emissions, reduce the Nation's dependence on fossil fuels, increase efficiency and reliability, reduce maintenance and decrease operating noise levels. The need for complex cooling systems and the mechanical bearings used in current aircraft designs are also eliminated in an electric Halbach aircraft engine. Problems with seals, leaks and friction loss are removed by the use of a magnetic suspension. Current jet engines rely on the internal combustion of jet fuel to drive massive turbines for propulsion. Such engines are expensive to run, have a high level of pollution associated with their operation and require extensive maintenance to run safely. The rising price of oil, along with recent advances in fuel cell development, has not only made all-electric jet engines a possibility, but has also sparked research in new pollution free, all-electric propulsor technologies. This technology has other potential applications in ultra-efficient motors, computer memory systems, manufacturing equipment, and space power systems.

A number of Halbach Magnetic rotors have been developed and tested under this program. The Halbach magnetically levitated motor concept uses permanent magnets attached to a rotor and coils mounted on a stator assembly adjacent to the rotor. A diagram of a series of magnets arranged in a Halbach array along with the adjacent coils is shown in figure 1. The coils in this figure are shown in the 0° orientation which was used on all the rotors. The permanent magnets are arranged in a Halbach array

which results in the production of a sinusoidally varying, periodic magnetic field in the vicinity of the levitation coils. Orienting the poles in this manner results in the magnet fields that combine on the coil side of the array and cancel on the back side. This magnetic array configuration was pioneered by Klaus Halbach for use in particle accelerators. This technique is inherently stable once the rotor reaches a critical speed requiring no active feedback control or superconductivity as seen in traditional implementations of magnetic suspension.

The objective of this work is to develop a rotor to be used in a Halbach array motor. This rotor will be suspended in the motor in both the radial and axial directions and driven within a magnetic field thus eliminating the need for conventional bearings. This will be accomplished by developing rotors of different sizes and performing a rotor characterization test and then a rotor levitation test. The hardware used to perform these tests will be described in this report. The overall design, fabrication and assembly of each of the rotors will also be described in detail in separate sections.

## Test Hardware

Experimental hardware systems were developed in the GRC Engineering Development Division to validate the basic principles described herein and the theoretical work that was performed. Each system focused around a unique Halbach array rotor. Each rotor required original design and fabrication techniques. Rotors of various diameters were developed to verify scalability. Rotor mass was minimized during the design process so that levitation occurs at the lowest possible speed since the rotation of the magnetic rotor past the stator coils generates a current and this current creates heat which increases with speed. Maximum lift is achieved when the amount of magnetic material is maximized and thus a continuous magnetic ring made up of multiple sectored magnets was designed. The field strength of the magnets is a function of the magnetic material density, the clearance between the rotor and stator and the rotor speed. A summary of the physical parameters for each rotor is included in table 1.

A separate test hardware setup was developed to characterize each of the rotors. The rotor is driven by an external motor through a coupling. A single coil of copper wire is located underneath the rotor and rests on a scale which is used to measure the downward force generated from the magnetic field in the rotor. The rotor is driven at various speeds to determine the relation between rotor speed and force. Different gauge wire was also investigated along with the number of turns of wire in the coil. An additional rotor was developed to investigate the thrust characteristics of the rotor in the axial direction. Axial bearing support can also be accomplished by using a magnetic Halbach array. As in the radial test, a coil of wire is located beneath the axial rotor. The coils were either wound along the face of the rotor in the 0° radial direction or, for the axial rotor only, rotated 90° and wound in the circumferential direction to determine which orientation generated the greater force. An image of the characterization hardware is shown in figure 2 for the 4 inch rotor, figure 3 for the 1 inch rotor, figure 4 for the 20 inch rotor and figure 5 for the axial rotor. Table 2 summarizes the pole piece wire sizes and wire turns used in testing for each rotor.

A second hardware setup was developed to test the levitation characteristics of the 1 and 4 inch rotors. The rotor is driven externally by a pair of motors identical to those used to characterize the rotors. The rotor is connected to these motors via a flexible shaft that allows the rotor to freely translate in the vertical direction. Mechanical stops prevent the rotor from translating horizontally. The rotor is placed within a stator housing with coils around the circumference with one coil per magnet. The rotation of the magnets past the coils results in levitation once a critical speed is reached. An image of this hardware is shown in figure 6 for the 4 inch rotor and figure 7 for the 1 inch rotor.

A small test hardware setup was developed for the 0.5 inch long rotor. This hardware held the rotor in place by clamping down on the bearings. A coil of wire was placed underneath the rotor which was energized by an electrical current. The torque that was created by the magnetic rotor due to this current was measured. An image of this hardware is shown in figure 8.

In addition to the force measurement, the hardware was instrumented with thermocouples to monitor the temperature of the coils during testing. The current flowing through the coils was also monitored. A

digital video recorder was set up to view the rotor shaft during levitation to determine when levitation occurred.

## Four Inch Radial Rotor

A 4 inch diameter rotor, as shown in figures 9 and 10, was developed to test the radial levitation effects for use as a magnetic bearing. The rotor parts consist of a shroud, hub, two end plates and 128 magnets. The stainless steel shroud contains the magnets in the radial direction. The magnets are held in the rotor axially by two aluminum endplates that are fastened to the hub with stainless steel screws. The magnet material is Neodymium Iron Boron B55. This material was selected for the magnets because of the high magnetic strength to weight ratio. This material also retains magnetic strength up to 200 °C. A diagram of the magnet is shown in figure 11. Reference 1 documents the results from testing this rotor.

The hub was wire electrical discharged machined (EDM) from aluminum. The EDM process allowed for tight tolerances on the flat surfaces due to the critical interference fit of the magnets between the hub and the shroud. The hub has 32 flat surfaces machined around the circumference to support the flat back side of the magnets. The fit of the magnets must be loose enough to allow the magnets to be inserted in the gap between the rotor and hub. Once the rotor is assembled, the magnets must also be under sufficient compression to prevent the rotor from separating due to radial growth during rotation.

The assembly of the rotor required the shroud and hub to be held concentric while the magnets were pressed into the space between. The orientation of the magnets around the circumference of the rotor is critical in order to create the Halbach array. The poles of the adjacent magnets are rotated 90° from each other which makes assembly difficult since the magnets are repelling. The assembled rotor is attached to the shaft with a clamping ring on each end to squeeze the hub on the shaft.

While operating the rotor in the levitation test hardware, the coils reached a high temperature due to the rotor speed required to achieve levitation. The higher the rotor speed, the more current being generated in the coils and thus the higher the temperature. In order to reduce the coil temperature, the rotor must be rotated at a slower speed. The two methods to accomplish this are to reduce the rotor weight and to move the magnets closer to the coils. Since the rotor must overcome the gravitational force to levitate, a lighter rotor will require a lower force for levitation. Also, locating the magnets closer to the coils will result in a greater repulsive magnetic force.

The rotor was redesigned to reduce weight by thinning the shroud and reducing mass from the hub. The thinner shroud allowed the magnets to be in closer proximity to the stator coils. The rotor weight was reduced by 14 percent which resulted in a 25 percent reduction in the speed required for levitation. Figures 12 and 13 show the hub cross section for each rotor.

Forced air convection was used to cool the coils initially by using axial fans. In order to reduce the coil temperature even further, the cooling system was converted to compressed air to allow for a greater volume of air at a higher velocity to flow past the coils. This will allow the levitation hardware to be operated long enough to obtain data before being shut down to allow the experiment to cool.

## One Inch Radial Rotor

To show scalability from the 4 inch rotor, a 1 inch rotor was developed as shown in figures 14 and 15. The magnetic field of this rotor was not sufficient to result in continuous levitation. The coils did not reach a high temperature since the resistance of the coils was lower and thus the rotor could be run continuously. But the temperature of the coils did rise enough to diminish the magnetic field required for levitation and thus the rotor would stop levitating. Reference 1 documents the results from testing this rotor.

The design, fabrication and assembly of the 1 inch rotor is identical to that of the 4 inch rotor. The 1 inch rotor contains 16 Neodymium Iron Boron B55 magnets around the circumference of the rotor. A

diagram of the magnet is shown in figure 16. The rotor is attached to the shaft by two roll pins installed through the hub and shaft.

## Twenty Inch Radial Rotor

The next rotor to be developed was 20 inch in diameter again to show scalability from the 4 inch rotor. This rotor was developed based on the theory that the linear velocity past the coils would be sufficient to produce the force necessary for levitation at a low enough rotational speed. The linear velocity of both the 4 and 1 inch rotors at levitation was approximately 3200 ft per second at 1800 and 6000 rpm, respectively and the corresponding speed of the 20 inch rotor would need to be 300 rpm to achieve this same velocity. This rotor was only characterized and was not levitated.

Containment of the magnets in the 20 inch rotor is of a different design than the other two rotors. The 20 inch rotor contains 128 Neodymium Iron Boron B55 magnets around the circumference. A diagram of the magnet is shown in figure 17. The fabrication and assembly of the rotor and the size of the magnets were the driving principles in this design. The rotor has a central circular disk that supports four 90° quadrants of 32 magnets. There are four assemblies so that the magnets can be easily assembled. The 20 inch rotor magnets are four times the size of the 4 inch rotor magnets and are more difficult to handle due to their higher strength.

The two side plates will be loosely assembled together and each of the 32 magnets will be slid into this assembly. The magnets are not press fit into the rotor but have a loose fit. A view of one assembled quadrant is shown in figure 18. Once complete, the quadrant will be fastened to the disk. The side plates are held together to the disk with 0.25 inch fasteners but the radial load on the rotor is supported by high strength dowel pins pressed axially through the parts. An exploded view of the complete 20 inch rotor is shown in figure 19. The rotor is attached directly to the shaft of the motor by a quick disconnect bushing that clamps down on the shaft when tightened.

## Half Inch Long Radial Rotor

A 0.5 inch long rotor was developed to compare a Halbach rotor using 16 Neodymium Iron Boron B55 magnets to a rotor from a commercial motor. This rotor is shown in figures 20 and 21 and a diagram of the magnet is shown in figure 22. The commercial rotor also utilized a Halbach array but the rotor was one continuous magnetic ring and the magnetic field strength was not as strong. Measurements were performed on each rotor and the fabricated rotor generated twice the magnetic field when compared to the commercial rotor. Both rotors were held in place in the test fixture described previously and shown in figure 8. A coil of wire underneath the rotor was energized by an electrical current. A torque on the rotor was generated due to the energized coil and this torque was measured. Only the magnet field and torque characteristics of this rotor were determined and this rotor was not levitated. Reference 3 documents the results from testing this rotor.

Assembly of the 0.5 inch long rotor was similar to the previous rotors. The magnets were press fit between the shroud and hub but the design of the parts was different. In order to maximize the magnet length, separate end plates were not used to contain the magnets axially. The shroud was machined with one end closed, except for an opening for the shaft, to contain the magnets axially on one end. The hub had a disk machined on one end to axially support the other end of the magnets. The rotor is attached to the shaft by a roll pin installed through the hub and shaft.

## Axial Rotor

An axial rotor, as shown in figures 23 and 24, was also developed to determine the force that could be generated to position the rotor axially while it is rotating. This would result in a rotor with a magnetic thrust bearing thus eliminating the need for mechanical bearings. With both radial and axial magnetic

bearings, the rotor would be completely suspended magnetically. The axial rotor was only characterized and was not levitated. Reference 2 documents the results from testing this rotor. Due to the axial layout of the magnets, an additional pole piece was designed so that the wires could be wound in the circumferential direction with the coil flat against the rotor. A diagram of the coils rotated in the 90° orientation is shown in figure 25.

The axial rotor has 32 Neodymium Iron Boron B55 magnets oriented in a disk shape with an outside diameter of 4 inch and inside diameter of 2 inch A diagram of the magnet is shown in figure 26. The Halbach array fields were oriented around the flat surface of the disk. The magnets are covered by eight 45° stainless steel segmented covers with each cover restraining four magnets. This cover design was necessary due to the difficulty in handling and assembling the 32 magnets into a Halbach array since adjacent magnets repel each other. Four magnets were oriented in a Halbach array and held in position in the hub while the cover segment was placed over them and secured with stainless steel screws. This process was repeated for the seven remaining covers. The rotor is attached to the shaft by a roll pin installed through the hub and shaft.

## Concluding Remarks

Much was learned about the fabrication and assembly techniques to result in a sophisticated rotor to perform the required experiments. The adjacent high strength magnets repel one another such that the rotor design is critical to facilitate assembly. The 4 inch rotors successfully levitated. The next step is the development of a bearingless Halbach motor that is driven using electrically energized propulsion coils and will levitate and be axially supported using separate levitation coils.

## References


1. Eichenberg, Dennis J., Gallo, Christopher A., and Thompson, William K., “Development and Testing of a Radial Halbach Magnetic Bearing,” NASA/TM—2006-214477, 2006.
2. Eichenberg, Dennis J., Gallo, Christopher A., and Thompson, William K., “Development and Testing of an Axial Halbach Magnetic Bearing,” NASA/TM—2006-214357, July 2006.
3. Eichenberg, Dennis J., Gallo, Christopher A., Thompson, William K., and Vrnak, Daniel R., “Torque Production in a Halbach Machine,” NASA/TM—2006-214478, 2006.

TABLE 1.—SUMMARY OF ROTOR PARAMETERS

| | | Rotor diameter | | | | | |
|---|---|---|---|---|---|---|---|
| | | 4 inch heavy | 4 inch light | 1 inch | 20 inch | 0.5 inch | Axial |
| Diameter | inch | 4.15 | 4.09 | 1.06 | 20.5 | 1.003 | 4.70 |
| Length | inch | 4.31 | 4.31 | 1.14 | 1.75 | 0.518 | 0.48 |
| Shroud thickness | inch | 0.070 | 0.040 | 0.030 | 0.048 | 0.024 | 0.030 |
| Overall weight | lb | 6.2 | 5.4 | 0.17 | 26.4 | 0.073 | 1.46 |
| Levitation speed | rpm | 1500 | 1200 | 6000 | n/a | n/a | n/a |
| Shaft diameter | | 3/8 inch | 3/8 inch | 5 mm | 24 mm | 8 mm | 0.5 inch |
| Magnet thickness | inch | 1/4 | 1/4 | 1/8 | 1/2 | 1/8 | 1/4 |
| Magnet length | inch | 1.0 | 1.0 | 1.0 | 1.0 | 1/2 | 1.0 |
| Magnets in axial direction | no. | 32 | 4 | 16 | 128 | 16 | 32 |
| Magnets in circumferential direction | no. | 32 | 4 | 1 | 1 | 1 | 1 |

TABLE 2.—SUMMARY OF TEST WIRE CONFIGURATIONS

| | | | Rotor diameter | | | | |
|---|---|---|---|---|---|---|---|
| Wire gauge | Number of wire turns | Coil orientation, degrees | 4 inch | 1 inch | 20 inch | 0.5 inch | Axial |
| 20 | 1 | 0 | X | X | X | | X |
| 20 | 6 | 0 | X | X | | | X |
| 20 | 20 | 0 | | | X | | |
| 24 | 20 | 0 | X | | | | |
| 24 | 10 | 0 | | | | X | |
| 20 | 1 | 90 | | | | | X |
| 20 | 6 | 90 | | | | | X |

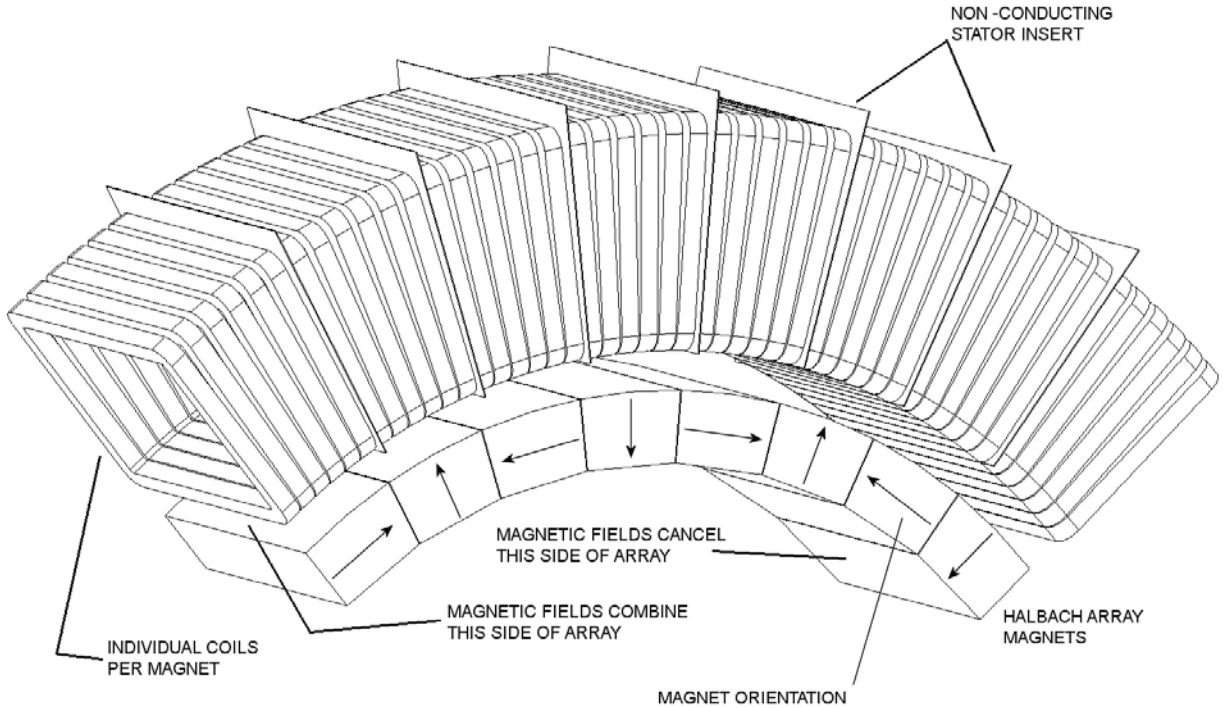


Figure 1.—Diagram of a Halbach array with coils in the 0° orientation.


Figure 2.—Four inch rotor characterization hardware setup.


Figure 3.—One inch rotor characterization hardware setup.


Figure 4.—Twenty inch rotor characterization hardware setup.

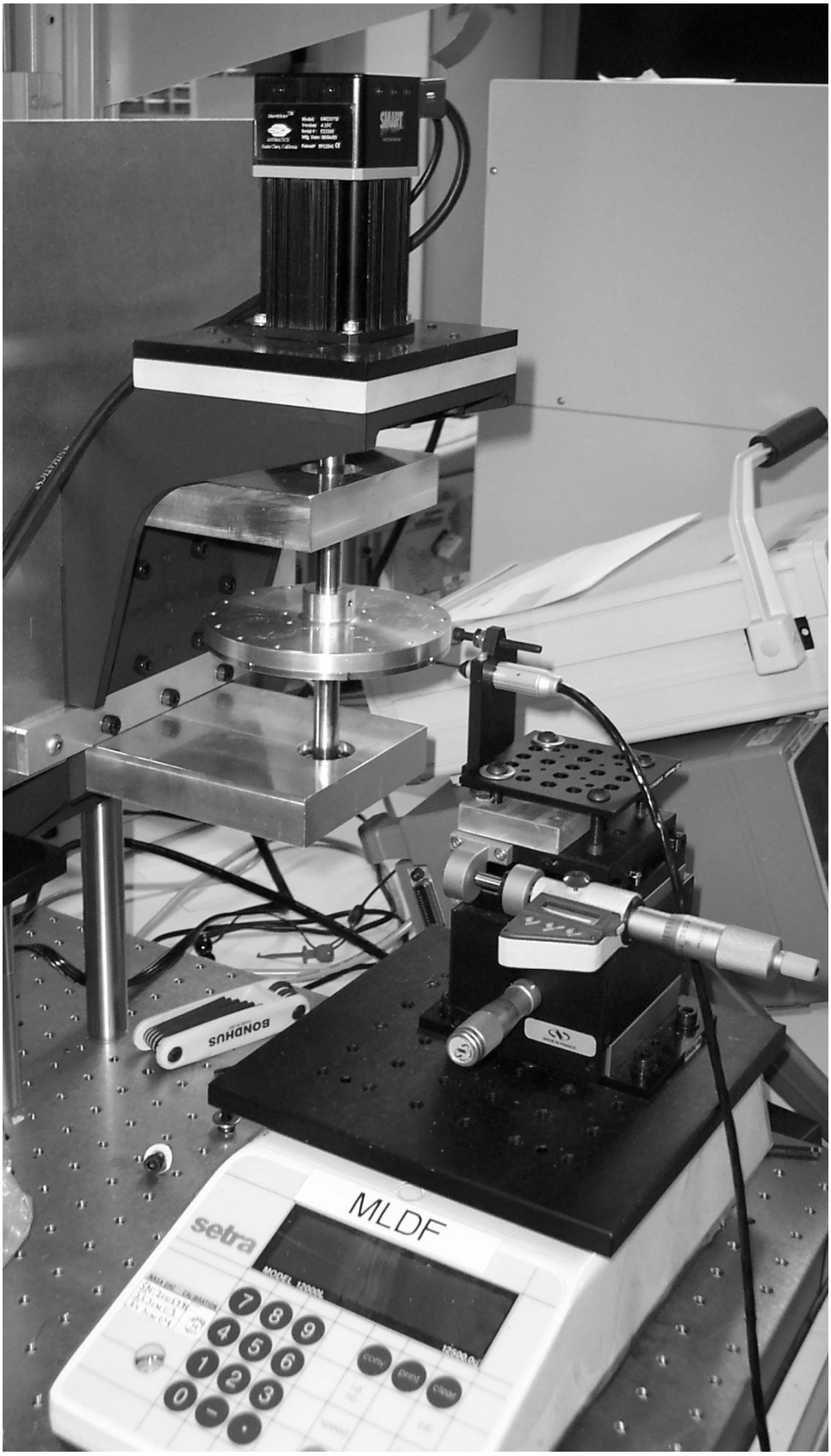


Figure 5.—Axial rotor characterization hardware setup.

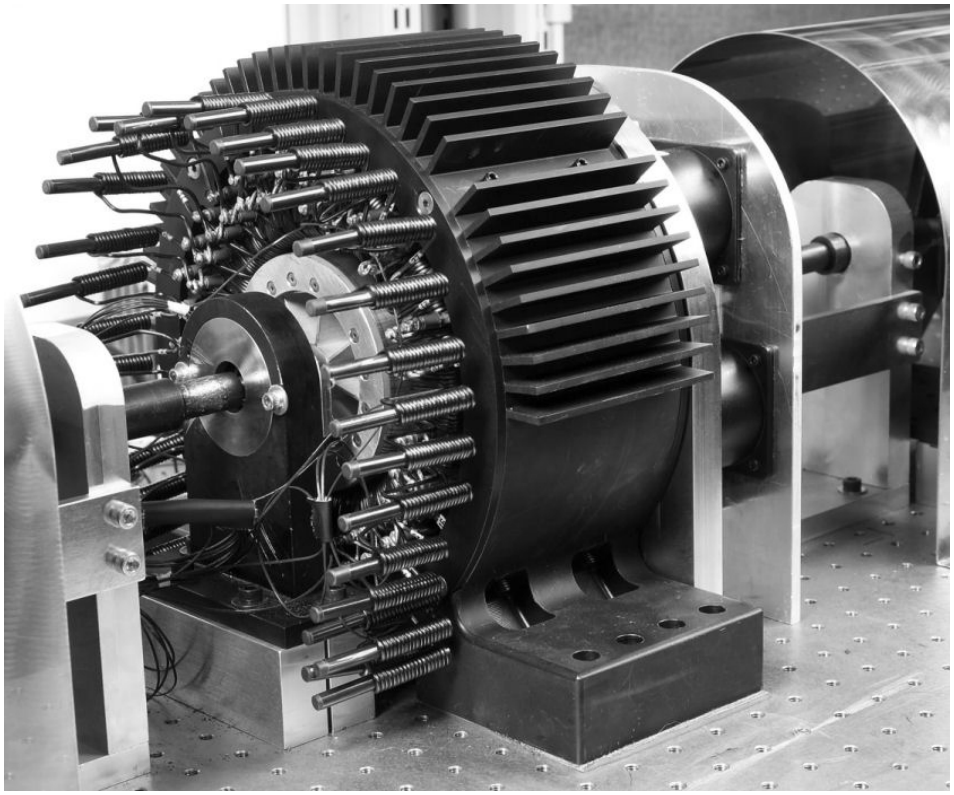

Figure 6.—Four inch rotor levitation hardware setup.

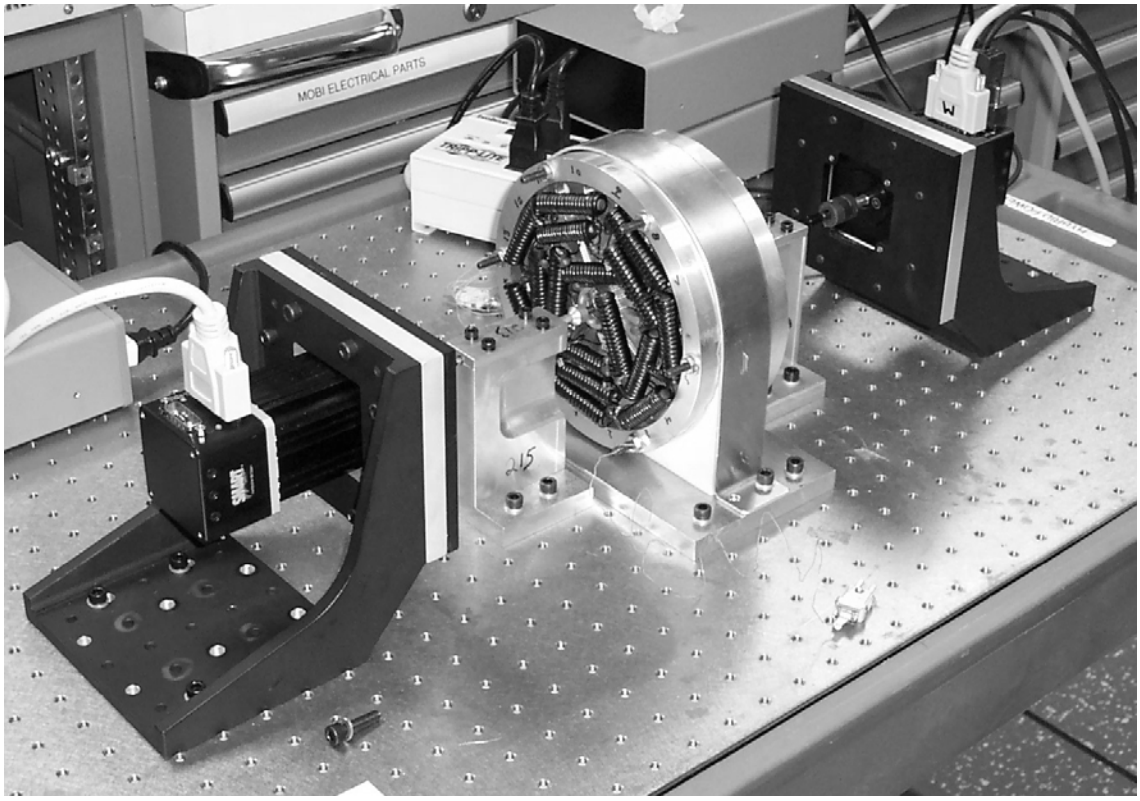


Figure 7.—One inch rotor characterization hardware setup.

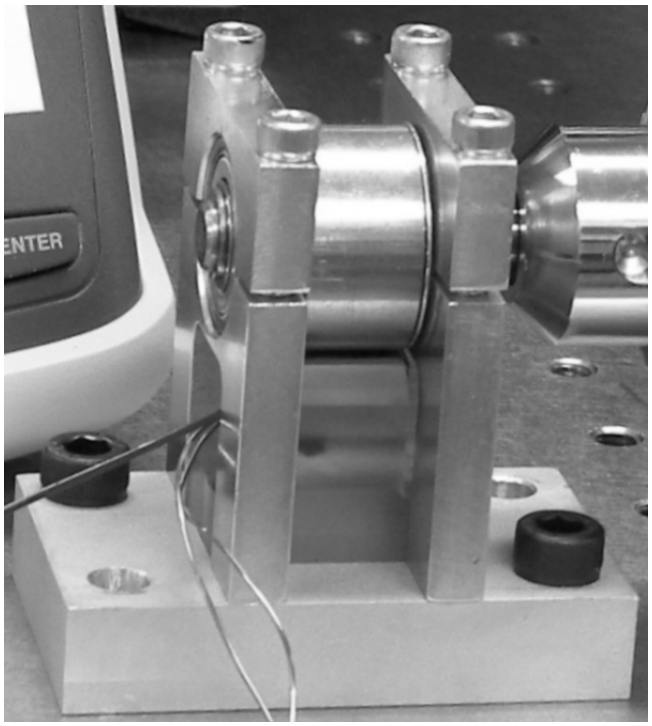


Figure 8.—Half inch long rotor test hardware setup.

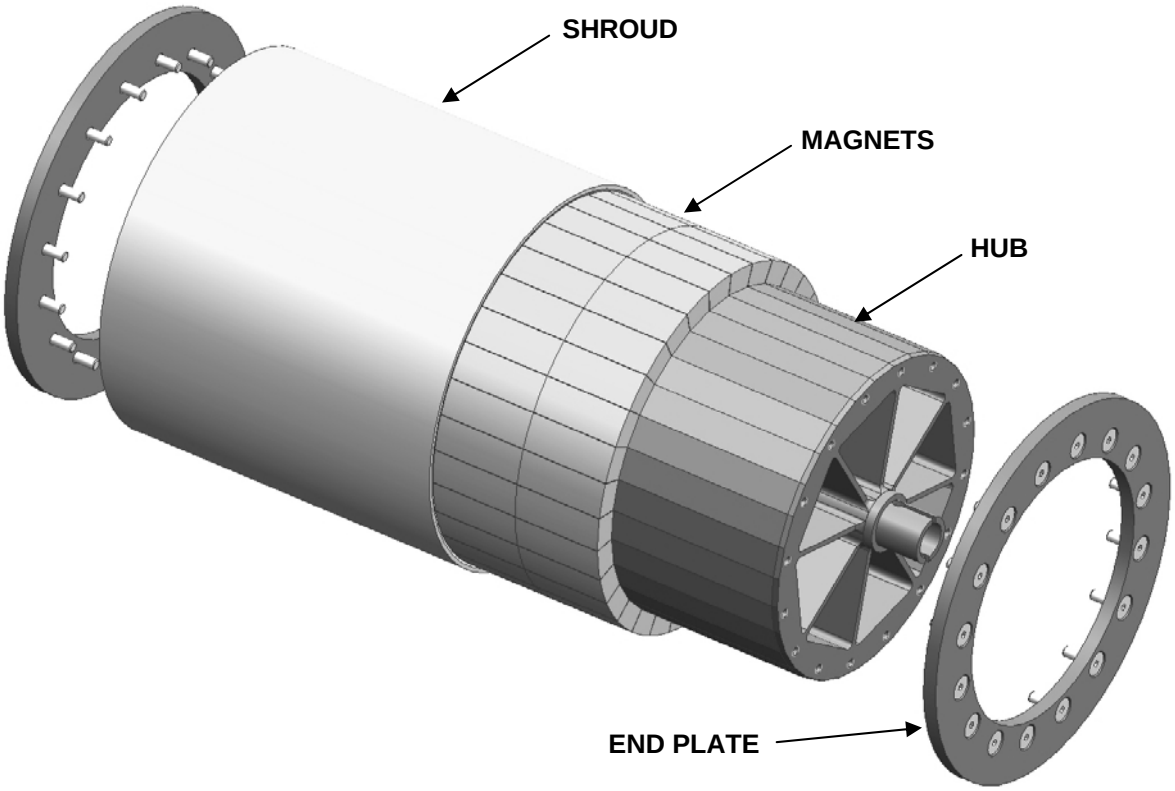


Figure 9.—Exploded view of four inch radial rotor model.

Figure 10.—Four inch radial Halbach magnetic bearing rotor.

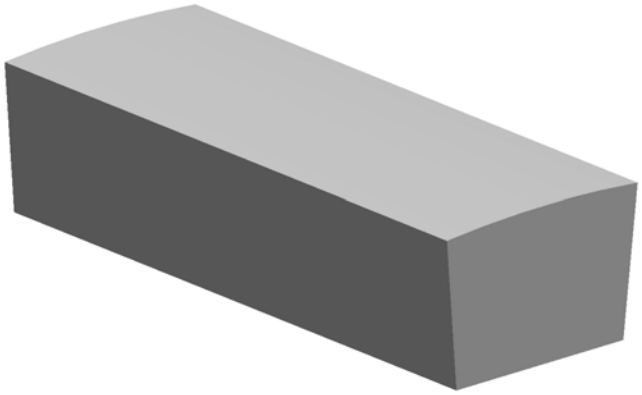

Figure 11.—Four inch rotor magnet.

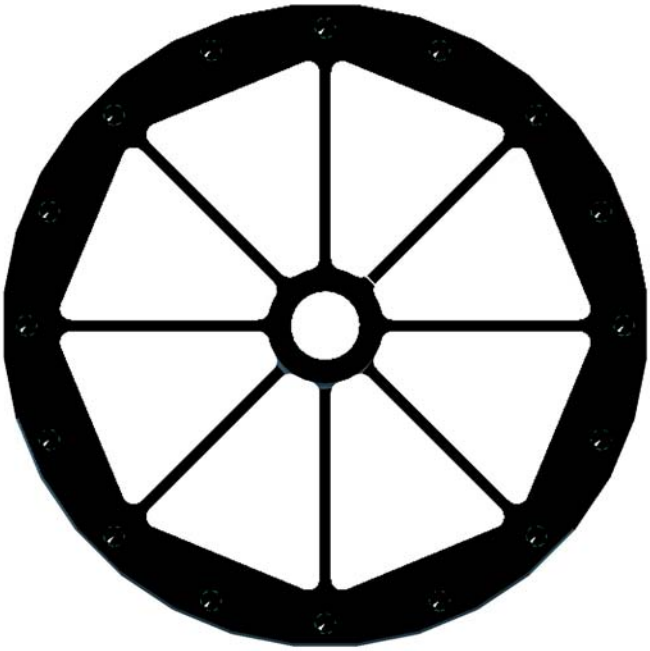

Figure 12.—Heavy four inch rotor hub.

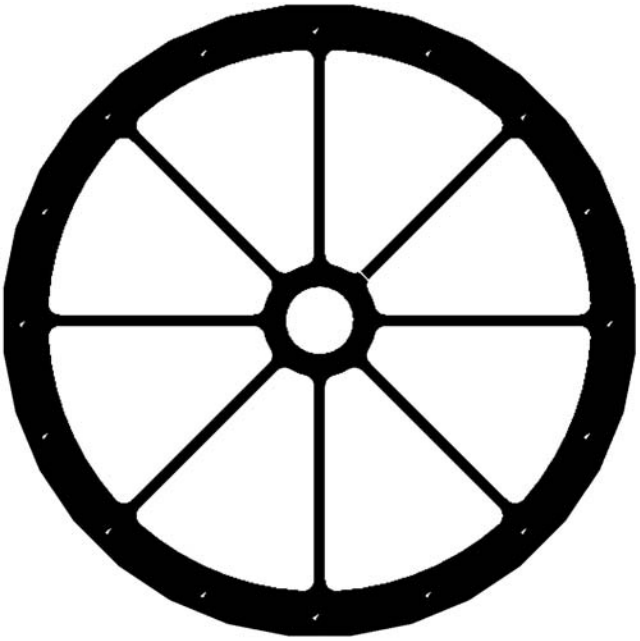

Figure 13.—Light four inch rotor hub.

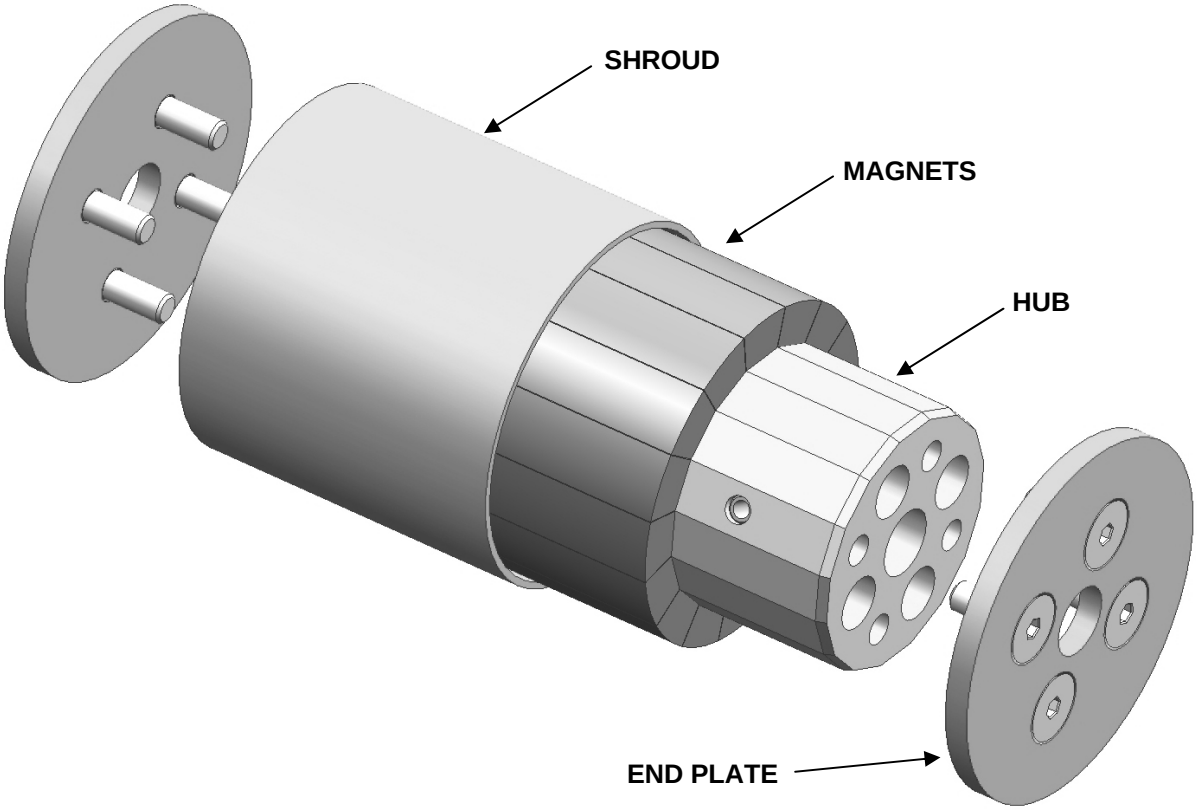


Figure 14.—Exploded view of one inch radial rotor.

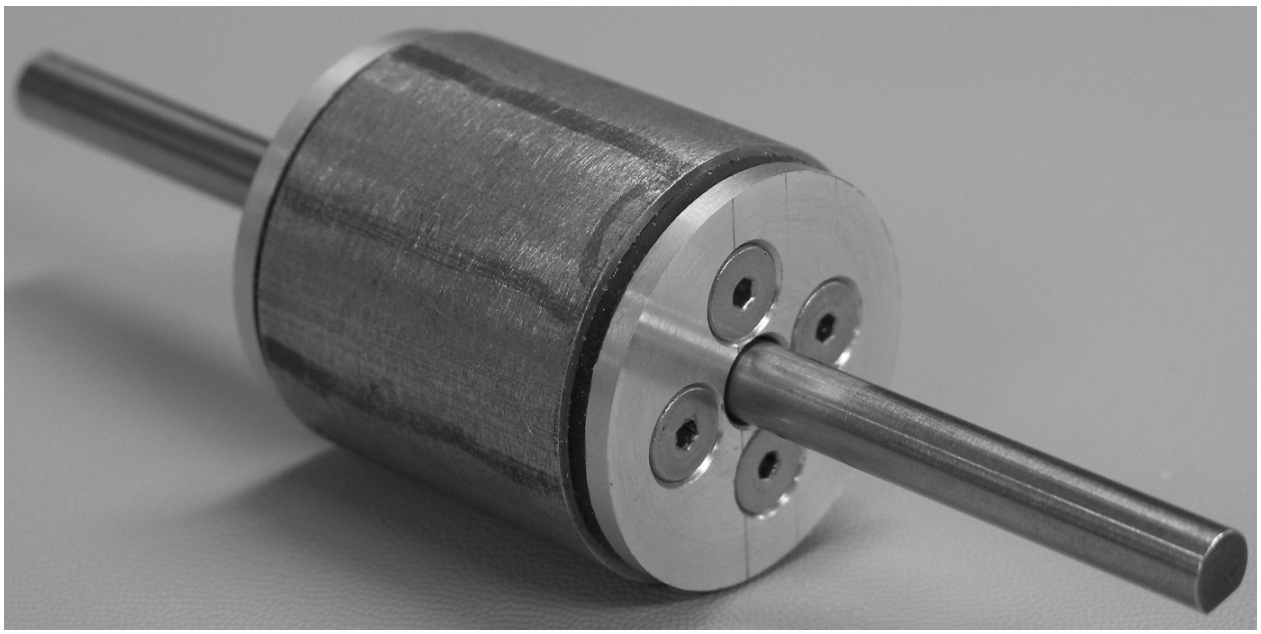

Figure 15.—One inch radial Halbach magnetic bearing rotor.

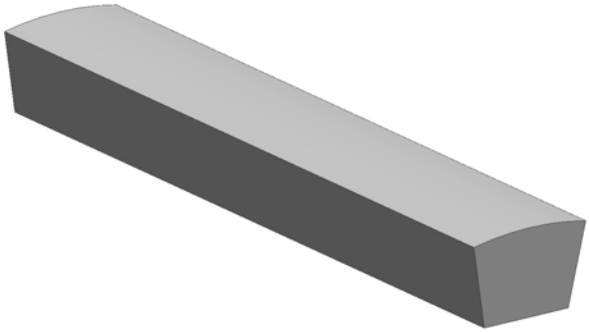

Figure 16.—One inch rotor magnet.

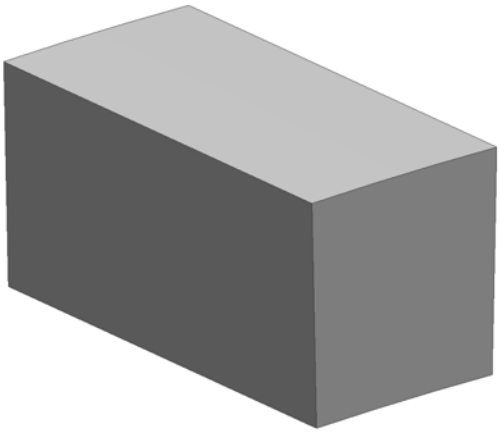

Figure 17.—Twenty inch rotor magnet.

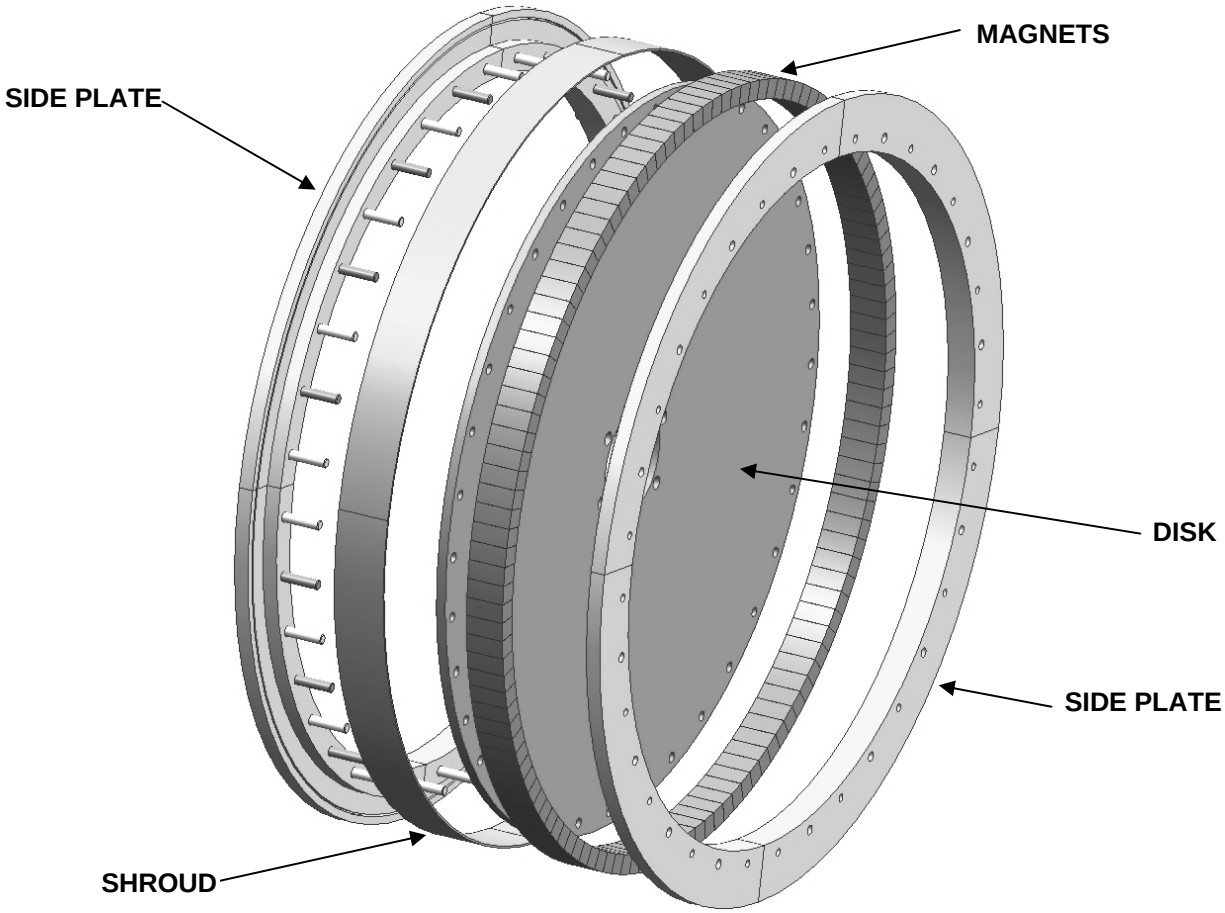


Figure 18.—Exploded view of twenty inch radial rotor model.

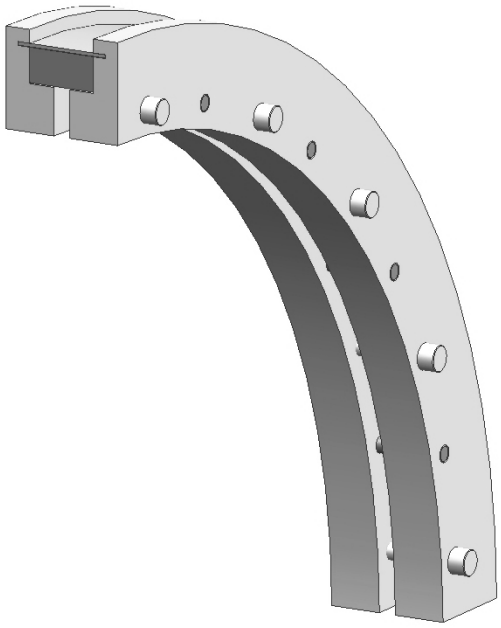

Figure 19.—Model of twenty inch radial rotor assembled quadrant.

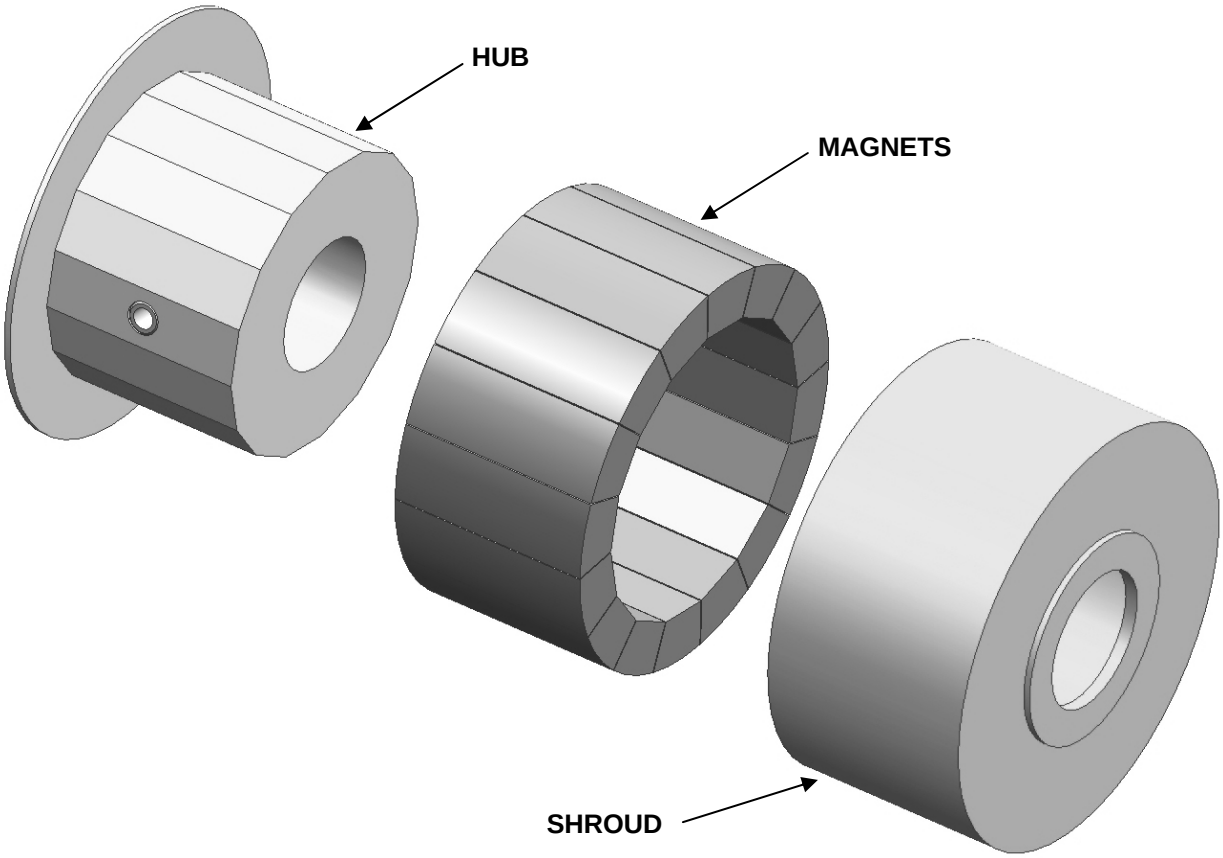


Figure 20.—Exploded view of half inch long rotor model.

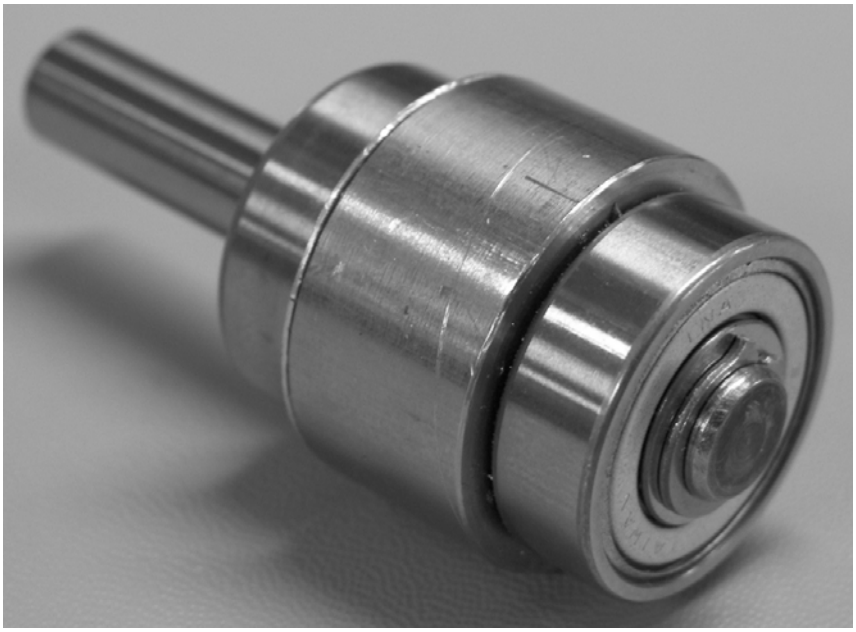

Figure 21.—Half inch long rotor mounted on shaft with bearings.

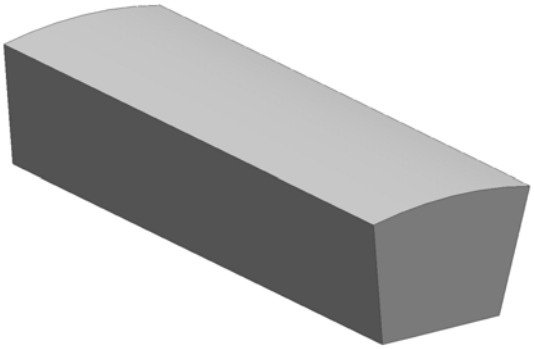

Figure 22.—Half inch long rotor magnet.

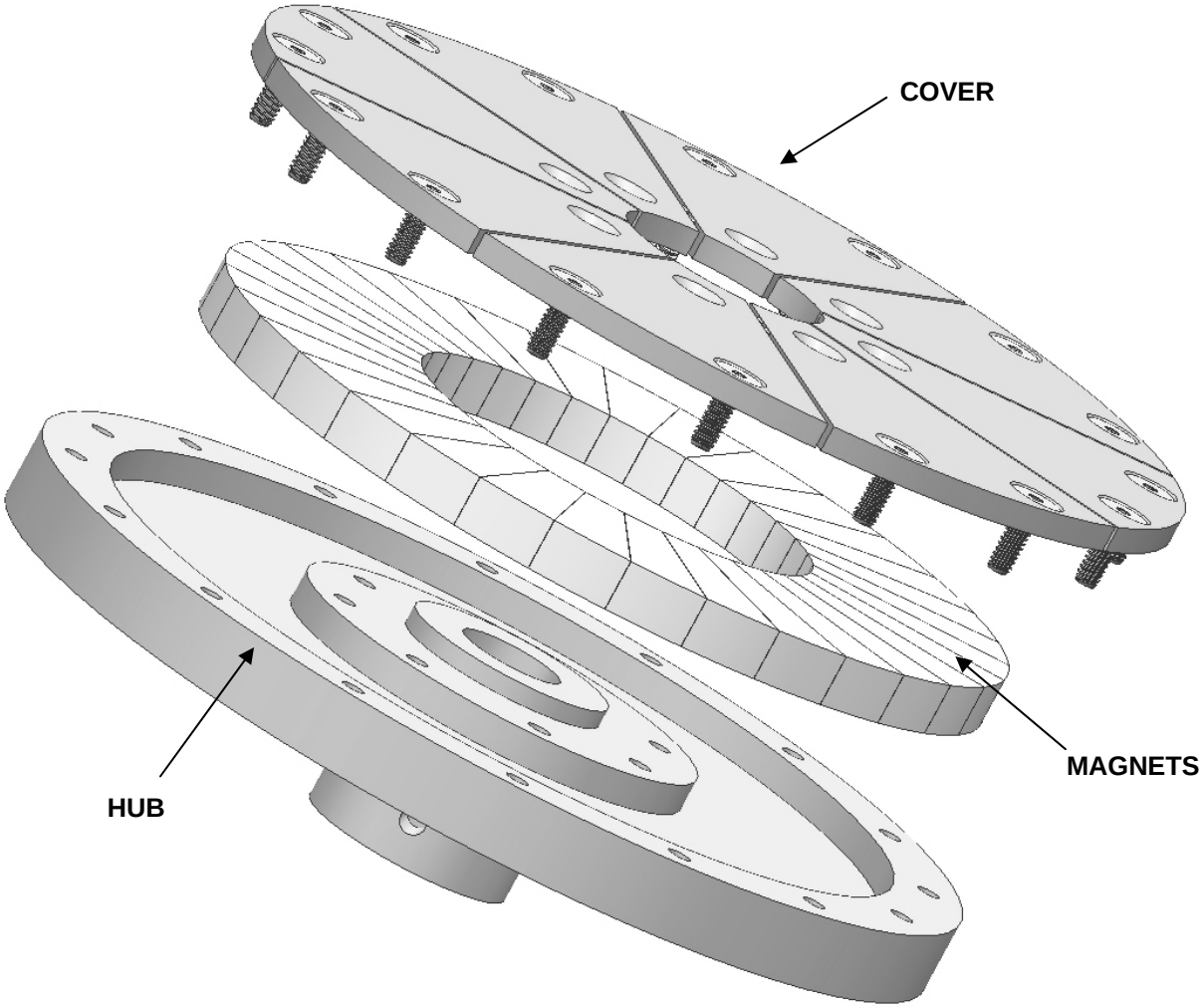


Figure 23.—Exploded view of axial rotor model.

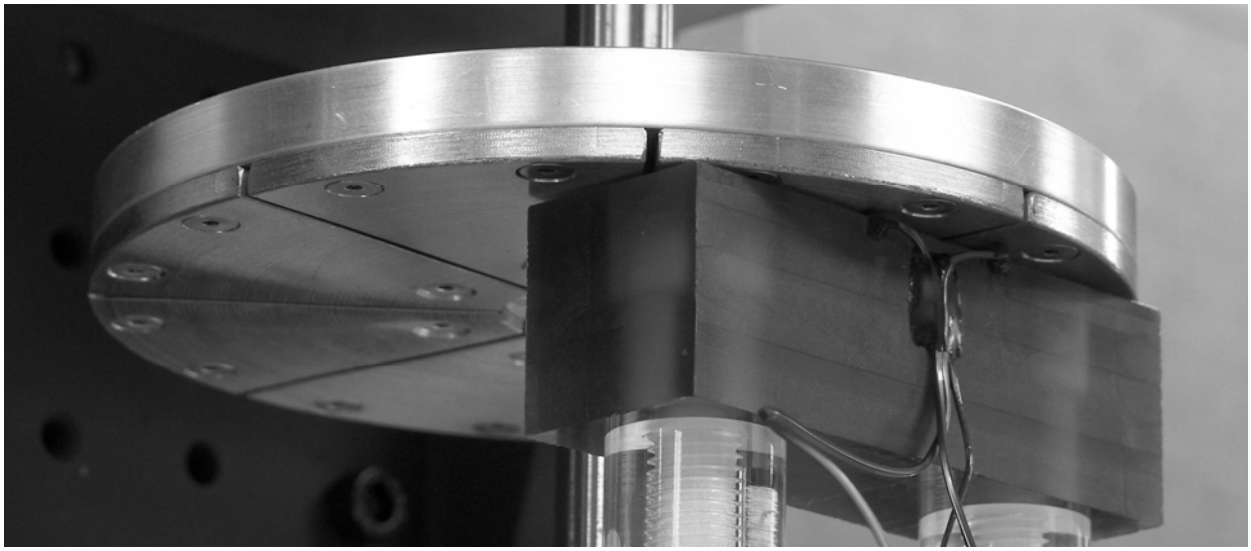

Figure 24.—Axial Halbach magnetic bearing rotor.

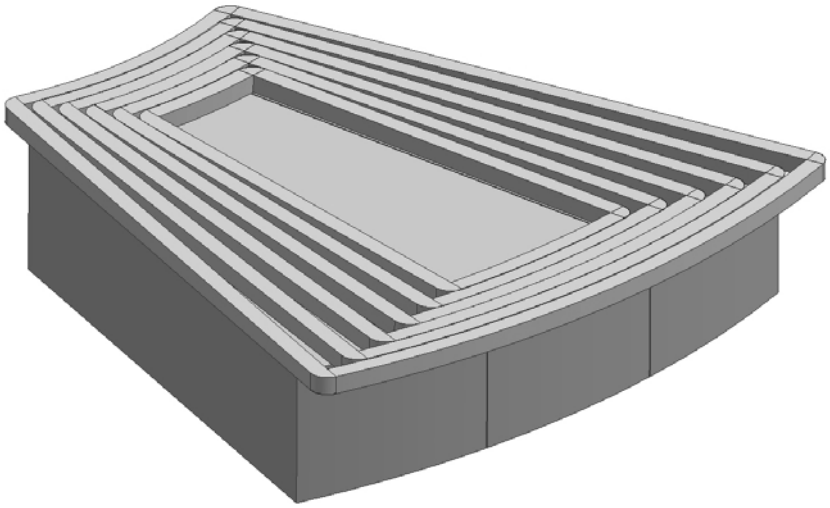

Figure 25.—Diagram of axial rotor magnets with coils in the 90° orientation.

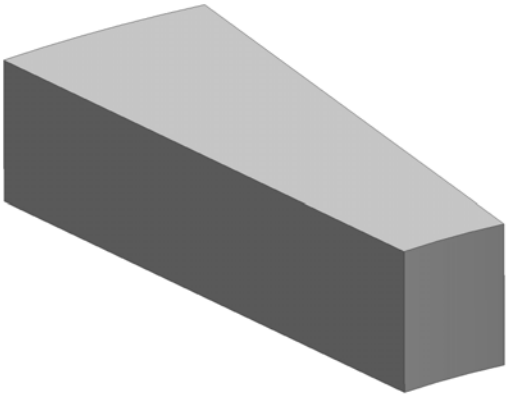

Figure 26.—Axial rotor magnet.

| REPORT DOCUMENTATION PAGE | Form Approved OMB No. 0704-0188 |
|---|---|



| | | |
|---|---|---|
| **1. REPORT DATE** *(DD-MM-YYYY)*<br>01-02-2008 | **2. REPORT TYPE**<br>Technical Memorandum | **3. DATES COVERED** *(From - To)* |
| **4. TITLE AND SUBTITLE**<br>Halbach Magnetic Rotor Development | | **5a. CONTRACT NUMBER**<br>**5b. GRANT NUMBER**<br>**5c. PROGRAM ELEMENT NUMBER** |
| **6. AUTHOR(S)**<br>Gallo, Christopher, A. | | **5d. PROJECT NUMBER**<br>**5e. TASK NUMBER**<br>**5f. WORK UNIT NUMBER**<br>WBS 599489.02.07.03.03.03.03 |
| **7. PERFORMING ORGANIZATION NAME(S) AND ADDRESS(ES)**<br>National Aeronautics and Space Administration<br>John H. Glenn Research Center at Lewis Field<br>Cleveland, Ohio 44135-3191 | | **8. PERFORMING ORGANIZATION REPORT NUMBER**<br>E-16281 |
| **9. SPONSORING/MONITORING AGENCY NAME(S) AND ADDRESS(ES)**<br>National Aeronautics and Space Administration<br>Washington, DC 20546-0001 | | **10. SPONSORING/MONITORS ACRONYM(S)**<br>NASA<br>**11. SPONSORING/MONITORING REPORT NUMBER**<br>NASA/TM-2008-215056 |

**12. DISTRIBUTION/AVAILABILITY STATEMENT**
Unclassified-Unlimited
Subject Category: 07
Available electronically at http://gltrs.grc.nasa.gov
This publication is available from the NASA Center for AeroSpace Information, 301-621-0390

**13. SUPPLEMENTARY NOTES**

**14. ABSTRACT**

The NASA John H. Glenn Research Center has a wealth of experience in Halbach array technology through the Fundamental Aeronautics Program. The goals of the program include improving aircraft efficiency, reliability, and safety. The concept of a Halbach magnetically levitated electric aircraft motor will help reduce harmful emissions, reduce the Nation's dependence on fossil fuels, increase efficiency and reliability, reduce maintenance and decrease operating noise levels. Experimental hardware systems were developed in the GRC Engineering Development Division to validate the basic principles described herein and the theoretical work that was performed. A number of Halbach Magnetic rotors have been developed and tested under this program. A separate test hardware setup was developed to characterize each of the rotors. A second hardware setup was developed to test the levitation characteristics of the rotors. Each system focused around a unique Halbach array rotor. Each rotor required original design and fabrication techniques. A 4 in. diameter rotor was developed to test the radial levitation effects for use as a magnetic bearing. To show scalability from the 4 in. rotor, a 1 in. rotor was developed to also test radial levitation effects. The next rotor to be developed was 20 in. in diameter again to show scalability from the 4 in. rotor. An axial rotor was developed to determine the force that could be generated to position the rotor axially while it is rotating. With both radial and axial magnetic bearings, the rotor would be completely suspended magnetically. The purpose of this report is to document the development of a series of Halbach magnetic rotors to be used in testing. The design, fabrication and assembly of the rotors will be discussed as well as the hardware developed to test the rotors.

**15. SUBJECT TERMS**
Magnetic bearing

| 16. SECURITY CLASSIFICATION OF: | | | 17. LIMITATION OF ABSTRACT | 18. NUMBER OF PAGES | 19a. NAME OF RESPONSIBLE PERSON |
|---|---|---|---|---|---|
| a. REPORT | b. ABSTRACT | c. THIS PAGE | | | STI Help Desk (email:help@sti.nasa.gov) |
| U | U | U | UU | 26 | **19b. TELEPHONE NUMBER** *(include area code)*<br>301-621-0390 |