Development of a Solar Array Drive Assembly for CubeSat

Mike Passaretti[*] and Ron Hayes[*]

Abstract

Small satellites and in particular CubeSats, have increasingly become more viable as platforms for payloads typically requiring much larger bus structures. As advances in technology make payloads and instruments for space missions smaller, lighter and more power efficient, a niche market is emerging from the university community to perform rapidly developed, low-cost missions on very small spacecraft - micro, nano, and picosatellites[i].

In just the last few years, imaging[ii], biological[iii] and new technology demonstration missions have been either proposed or have flown using variations of the CubeSat structure as a basis. As these missions have become more complex, and the CubeSat standard has increased in both size (number of cubes) and mass, available power has become an issue. Body-mounted solar cells provide a minimal amount of power; deployable arrays improve on that baseline but are still limited. To truly achieve maximum power, deployed tracked arrays are necessary. To this end, Honeybee Robotics Spacecraft Mechanisms Corporation, along with MMA of Nederland Colorado, has developed a solar array drive assembly (SADA) and deployable solar arrays specifically for CubeSat missions. In this paper, we discuss the development of the SADA.

Introduction

This SADA has been designed and prototyped specifically for CubeSat satellites. A CubeSat is a type of small satellite intended for cost-effective research in low Earth orbit space flights. A CubeSat comprises of a number of standardized modules or “U's” which measure exactly 10 cm^3, weigh no more than 1 kilogram and are well known to use readily available system components. CubeSats also follow a standard which was pioneered by the California Polytechnic University and Stanford University in 1999.

Implementation of an articulated solar array drive addresses the demand for maximal power transfer from a given solar array assembly. In conjunction with a solar array assembly, the SADA further increases the effectiveness of “low-cost” CubeSat missions. A prototype SADA unit has been developed for demonstration purposes. The prototype was developed using sound aerospace engineering practices that pave the way to future flight units. To further enhance the performance of this system, this SADA will also be able to support autonomous sun-tracking. The SADA described herein is a simple, self contained, ultra-thin, low-power, stackable single actuator drive system. This self-contained system is designed to operate on approximately 500 mW of power while articulating the arrays, and less than 1 mW while the actuators and system are inactive. The SADA power system will be supplied from existing CubeSat power bus and can accept a range of voltages.

All of this innovative technology is specifically designed to fit in what used to be wasted payload space, a 6.5-mm “slice” of the CubeSat bus. Refer to Figure 1 for the location on the bus where this system is designed to reside.

[*] Honeybee Robotics Spacecraft Mechanisms Corporation, New York, NY

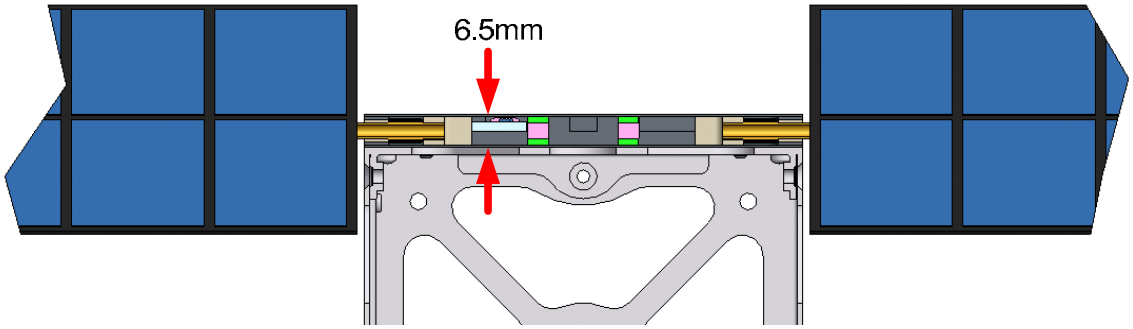

Figure 1: 6.5mm "slice" of CubeSat bus where SADA will integrate on the end of typical CubeSat structure.

Mechanical Description

The solar array drive assembly performs key system functions, rotating the solar arrays to keep them optimally oriented with respect to the Sun and providing a path for power transfer from the arrays to the CubeSat bus. The prototype system is shown in Figure 2. This prototype was specifically developed to make use of off-the-shelf technology to minimize the cost and complexity of the design.

Solar arrays are attached to either end of the SADA onto output shafts protruding from the unit. Cable-twists are used to carry power from the arrays and each wing has a dedicated cable-twist assembly. Cable-twists offer several advantages, but from an operational standpoint they need to be protected from over winding. To prevent over-winding, mechanical hard stops are implemented to limit the rotational travel of the output shafts. The SADA is designed to accommodate slip rings for continuous rotation if required, but the total number of circuits available for both power transfer options is limited due to the small height of the device. This became one of the major challenges in the electrical design.

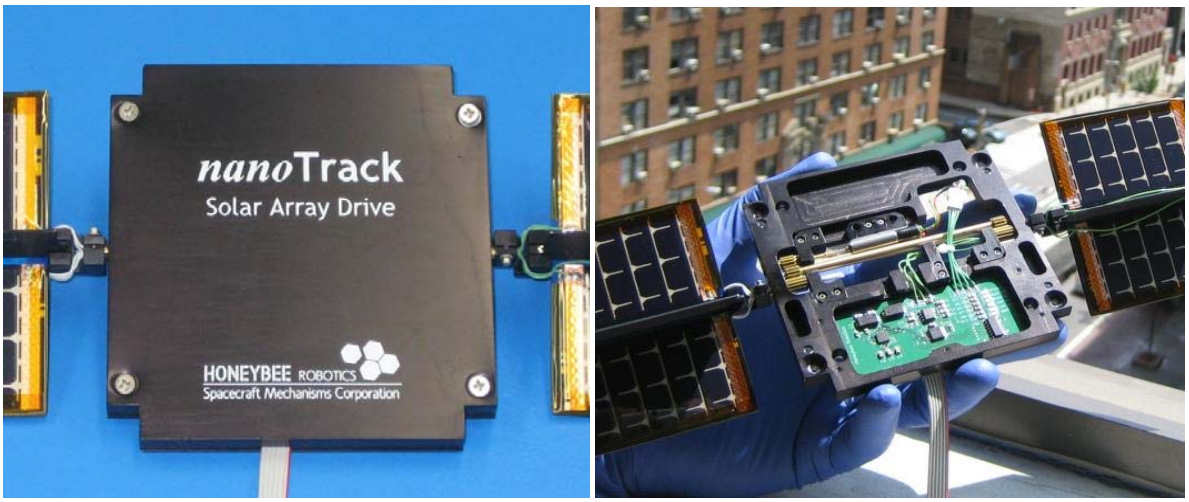

Figure 2: Prototype unit shown with cover on (left) and off (right) on top of Honeybee Robotics headquarters in Manhattan.

Small Satellite Electronics & Considerations

Very small cost-effective spacecraft such as CubeSats are well known to take advantage and are almost synonymous with employing the use of commercial-off-the-shelf electronic components. The benefits gained by designing from such volumes of commonly available and very inexpensive hardware, does not come without some added risk. The demanding environment of space in which all spacecraft are asked to operate in, brings with it exposure to several extreme factors, namely radiation.

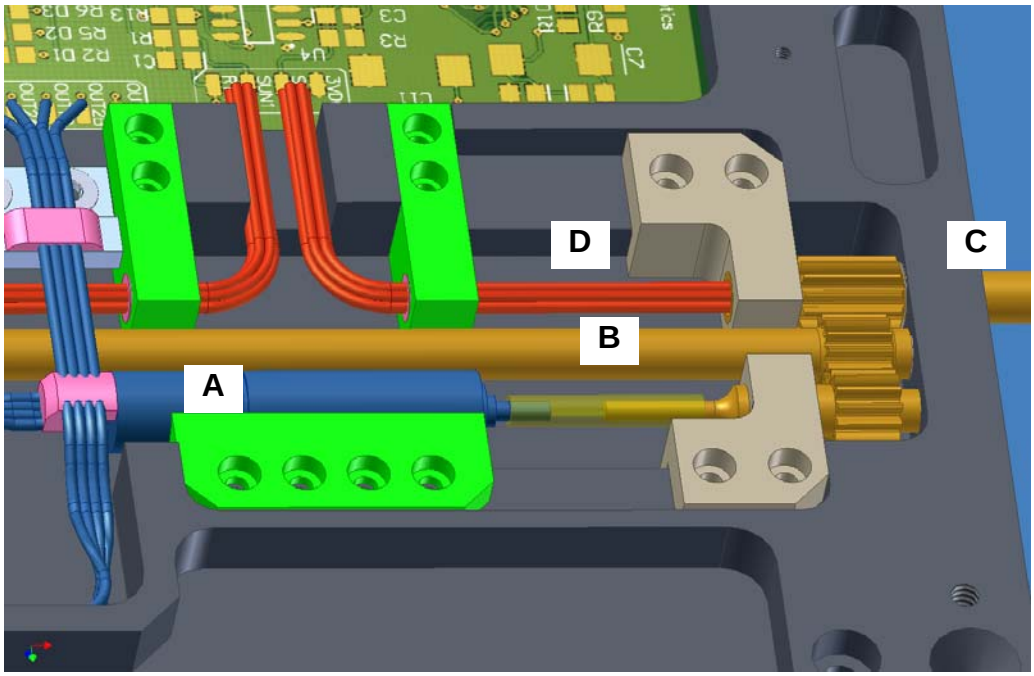

Figure 3: Details of drive train and power transfer sections. Stepper motor and multi-stage planetary transmission (A), idler gear shaft (B), output shaft and gear (C), and cable wrap (D).

Semiconductor based electronic components are inherently susceptible to unwanted effects of space radiation. These effects can be generally separated into two classes: cumulative and single event effects (SEE). The first class, cumulative effects are brought on gradually throughout the lifetime of exposure in a radiation rich environment. The upper limit on the cumulative amount of radiation a susceptible component can accept before failure is referred to as the total ionizing dose. Total ionizing dose is the measure of the cumulative dose of energy transferred into the material by radiation in the form of ionizing energy. Thorough testing and characterization of a component can be used to confidently assess its total ionizing dose. The second class, single event effects are quite different in that they can be attributed to the energy transferred by a single particle interacting with an electronic device. A device susceptible to SEE can therefore exhibit failure at any moment.

There are different types of SEE. Single event upsets are non-damaging soft errors. Single event upsets typically appear as transient signals, or as bit changes in memory stores. In contrast to single event upsets, which are only seen in software, there exists a counterpart in hardware, single event latch-up. Single event latch-ups can result in higher operating currents which can lead to component degradation and possible failure.

Radiation hardening, or “rad hard” for short, is a method of designing and testing electronic components such that they are resistant to the unwanted effects associated with the environment of high altitude flights above Earth or in outer space. The typical costs associated such “rad hard” devices are normally

high and are therefore only reserved for consideration when larger budgets are available. Traditionally space systems have been designed using a limited number of electronic components, whose limited variety can be attributed to availability of their radiation hardened versions. However, a migration from traditional rad hard components is currently underway, thanks to the commercialization of space. Space is no longer the sole domain of the world's largest governments, where programs are funded by enormous and eternal budgets aimed at fighting the cold war. Consequently, space manufacturers around the world are faced with a requirement to build satellites that are faster, better and cheaper than those made in the past.[iv]

Another way of dealing with the unwanted effects of radiation and thereby still achieving "rad hard," is through clever hardware & software designs. Common techniques include cold-redundancy (only one processor powered at a time thereby minimizing risk of a SEE). Other techniques such as hot-redundancy are also employed in the case of memory access. Hot-redundancy utilizes voting schemes where the contents of triplet and physically separate memory stores are compared and voted upon using a "majority-wins" rule to confidently obtain a valid result. Similar techniques can be implemented in software for an added level of radiation hardness. The principle of triplet techniques can be used with data variables.

Over the years since this migration has taken place, select groups of readily available electronic components have made their way onto satellites and into space. The Texas Instruments MSP430 family of microcontrollers is one example of typically sought after processors that have been used over and over on CubeSat missions. Another example is the Atmel ATmega64 microcontrollers. As CubeSats are becoming more attractive to organizations and institutions, more and more commercial-off-the-shelf (COTS) type electronics are emerging as viable small satellite system components. Companies like Pumpkin Inc[v] are now introducing products that are based on the widely available and commonly known 8051-, Microchip PIC24/dsPIC33 as possible design options for CubeSat engineers.

SADA Electrical System

The SADA's embedded control unit (ECU) was designed around a low-cost Texas Instruments MSP430F2013. The microcontroller (MCU) used was very simple but effective; having just enough memory to demonstrate the SADA's capabilities. While motor commutation was accomplished by the algorithm run on the MCU, the step sequences were translated to a motor driver IC. The motor driver IC was used to energize the coils of our bipolar stepper motor. The motor driver chosen was the Allegro MicroSystems A3906 low-voltage motor driver chip. Each output channel of this device is rated at 1A and the device itself can operate on voltages as low as 2.5VDC. The A3906 was chosen for its cost, availability and functionality and very small package (QFN-20, 4x4x1.5 mm). Other features of the device include internal thermal shutdown and under voltage lock-out. For power, a low-noise, low-drop-out (LDO) voltage regulator was chosen. The Linear Technologies LT1763 is capable of supplying 500 mA of output current with a LDO voltage of <300 mV. This LDO regulator is specifically designed for low power, battery applications.

The performance of the above mentioned electronic components are used to realize the core functions of the SADA's prototype ECU. The prototype ECU is comprised of the following major sub-systems: a spacecraft bus power translator module (LT1763), processor unit (MSP430) and the stepper motor translator (A3906). Refer to Figure 4 for the system block diagram. It should be noted that external memory stores as well as the spacecraft communication module were not implemented in the prototype ECU.

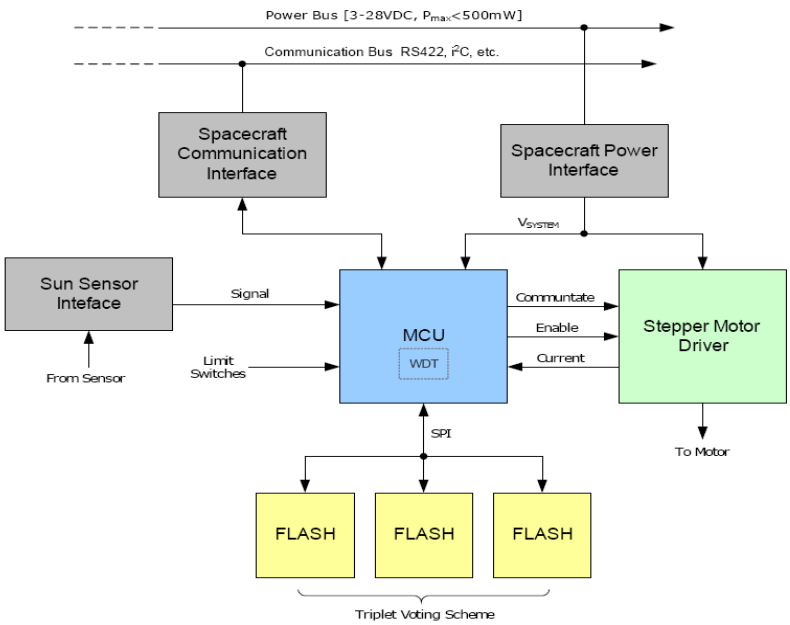

Figure 4: Block diagram of SADA drive and control electronics

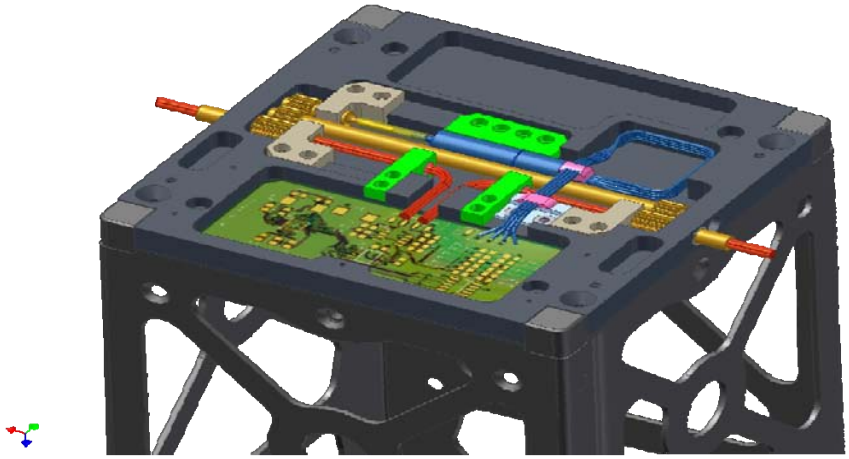

Figure 5: Inner workings of the prototype SADA shown on typical CubeSat structure. The drive fits into the typically unused space at the end of a standard frame (e.g. Pumpkin^{V}).

Electrical Controls

This SADA ECU is designed to enable Sun tracking in two possible modes of operation. While the spacecraft communication module was not included in the prototype, this first mode is intended to allow the SADA ECU to receive commands over the spacecraft communication bus for purposes such as Sun tracking. Typical Sun tracking are: “track”, “idle”, “stop” and “position.” If the ECU is not acting on commands via a host, it will default to an autonomous Sun tracking mode. In either mode of tracking, the host may request data from the SADA at any time. For the purposes of this first prototype, the device was always run in autonomous Sun tracking mode.

The SADA ECU is capable of entering into a “stand-by” mode while the system is inactive. In stand-by mode the system is still capable of receiving and reacting to commands from the host. This powerful

interrupt driven feature of the MCU unit chosen drastically reduces complexity of the software control system and greatly reduces the power consumption of the system. From a standpoint of consumption, the system will operate on approximately 500 mW while actively tracking and less than 1 mW while in stand-by.

The solar array position is controlled in an open-loop fashion. The motor current is limited by the stepper motor controller for thermal protection and power savings reasons. The motor current is also monitored by the MCU for increased perception from a controls standpoint. Motor steps are accumulated and limit switches (not shown in models) are used to reliably detect proximity of hard stops. The limit switches in conjunction with hard-stops are approximately 360° apart and allow for the angular position at the respective extremes to be known by the MCU. One of the limit-switch/hard-stops will be designated as the "home" position. This is the default starting point for rotation of the output shafts and attached solar arrays. The shaft is free to rotate and track the Sun (under command from either the host or via feedback from the Sun sensor) while under control of the MCU for approximately one full rotation. At the end of this rotation the next limit-switch/ hard-stop will be encountered. The system will recognize this limit and the array will be rotated back the "home" position to pick-up where it left off and begin tracking again. The process will be repeated on orbit, keeping the arrays pointed at the Sun to maintain optimal power levels on the solar arrays.

Sun Sensing

For purposes of the prototype, a very simple Sun sensor was created by using two inexpensive COTS photovoltaic (PV) cells. A "fence" or intra-bank barrier was positioned between the PV cells. In Figure 6, the action of the intra-bank barrier in determining Sun position is illustrated. In this diagram, it can be seen that as the angle of the light source (or Sun in this case) changes relative to the array it casts a shadow onto the cell bank furthest from it, causing a reduced output from that bank (or string). A photograph of the prototype sensor can be seen in Figure 7. A simple algorithm was written to interpret the overall effect of the system with an incident light source.

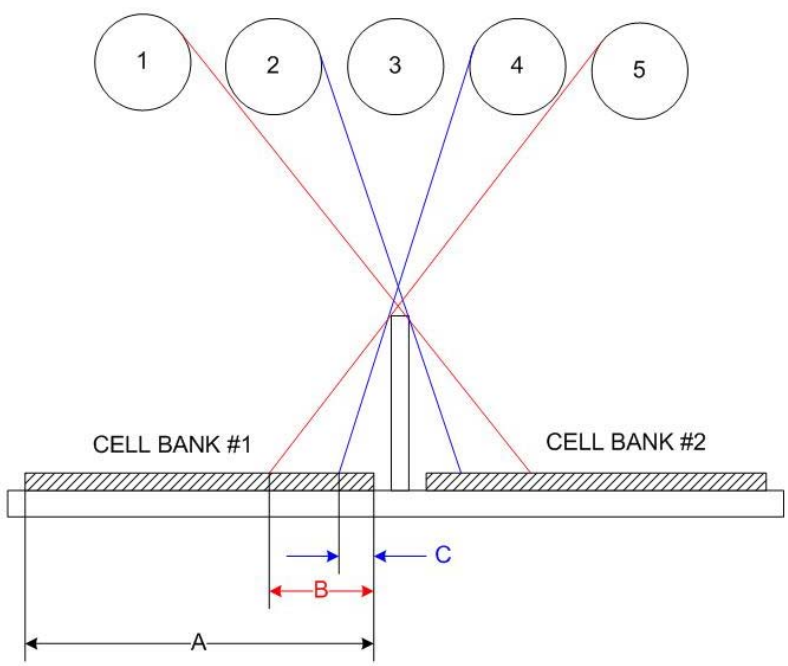

Figure 6: Illustration of Sun angle to obscured portion of cell banks. Note that of the total available area (represented by 'A') the obscured area ('B' and 'C') decreases as the light source becomes normal to the panel surface. By comparing the output of the two banks shown, we are able to determine gross array position relative to the Sun.

The algorithm was written and executed on the MSP430 MCU to accomplish a simple but effective Sun tracking mode. The 12-bit ADC on-chip peripheral provided by the MCU was used to sample and convert the loaded PV cell bank voltages. The ADC was called upon to sample both PV cell bank banks at approximately 1 kHz; this data product was then used by the algorithm to determine position. A “dead band” variable was defined and used to account for acceptable difference between the PV cell bank voltages. When the relative voltage between the two PV cell banks deviated by a value greater than the dead-band, the light-source’s angle of incidence is inferred and the direction in which the PV array is to be rotated is established. A sample of this algorithm is shown here:

```
GetDIRECTION( ) {
IF (SUNSENSE1 > (SUNSENSE2 + dead_band))
return CLOCKWISE;
IF (SUNSENSE1 < (SUNSENSE2 - dead_band))
return COUNTER_CLOCKWISE;
ELSE
return NO_MOTION;
}
```

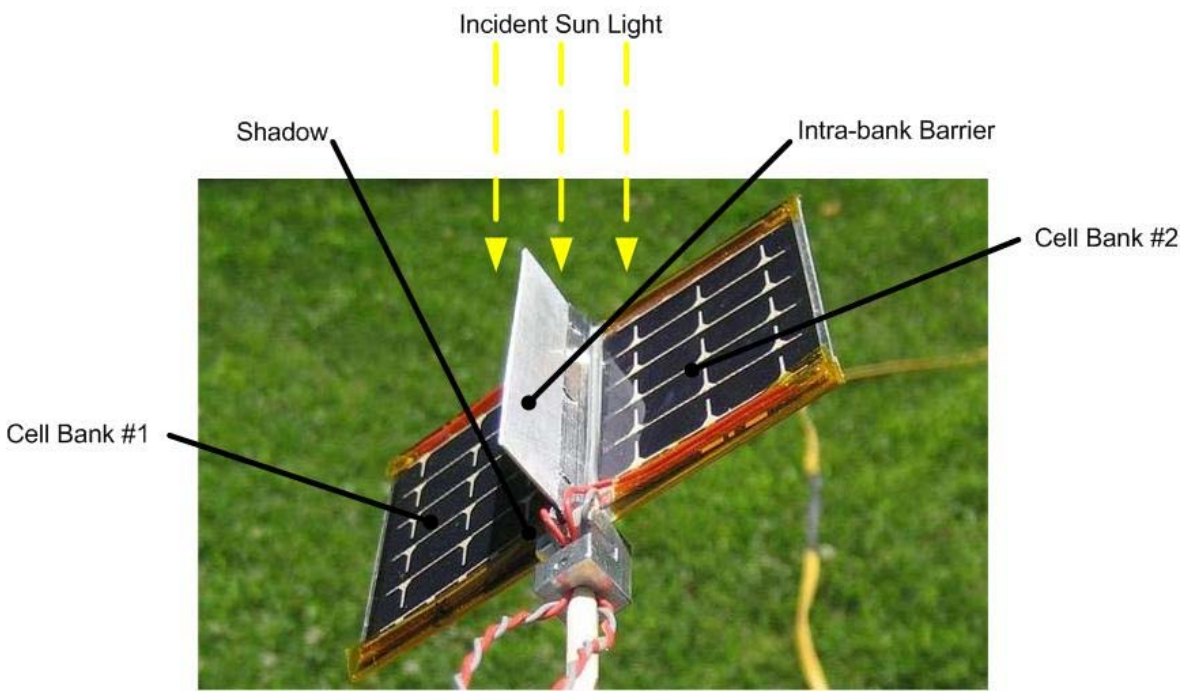

Figure 7: Prototype Intra-bank Barrier Test

Because the drive itself is so thin (6.5-mm thick) and so much is packed in the available space, there is little room for power transfer. Typically, devices used for transfer of power generated in the solar arrays into the body of a spacecraft have been either slip rings or twist capsules. Slip rings are devices that use sliding contacts on rotating rings to allow continuous rotation of the ring (typically it is this part that is connected to the arrays themselves). In this drive, the option exists to use either a slip ring or twist-device. Both are limited however, as the number of slip ring circuits and their current-carrying capacities are limited by the space available. Because of this, the method described above was developed to perform course sun tracking without additional sensors on the wing.

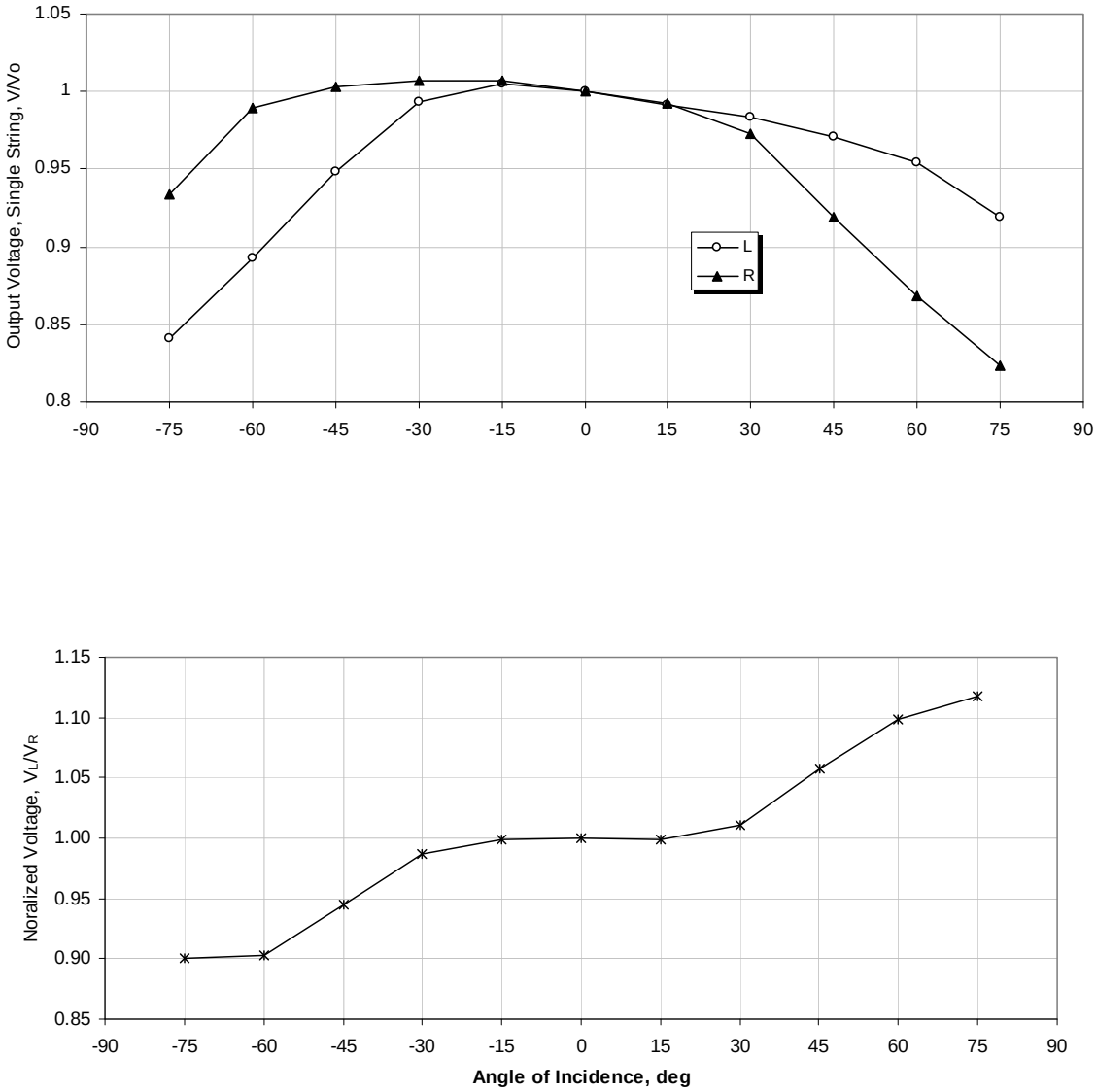

Figure 8: Characterization of breadboard solar array configuration with raised, intra-bank barrier. The top graph shows the output of the individual strings as a function of Sun (gimbal) position; the bottom graph shows the normalized voltage ratio.

Conclusions

The development of an application specific low-profile solar array drive assembly for CubeSats was successfully developed and demonstrated at SmallSat 2009. The problem of addressing the demand for increasingly more power on a CubeSat bus can be realized through implementation of this type of SADA.

The prototype ECU developed for the SADA described herein possessed only basic functionality and was done so intentionally for simplicity and demonstration-friendly purposes. It will be critical that future iterations of the ECU incorporate key sub-systems such as a communication bus, external memory stores, etc. Even further, these future ECU's should also include features also described herein; specifically for radiation hardening. While such aspects were decidedly foregone during the development of this first prototype, it is imperative that they be included in order for the electrical system to be tried as a viable flight unit.

A simplistic and cost-effective method for determining the angle of incidence of a light source (such as the Sun) was developed herein. Autonomous Sun tracking was realized by using PV cells (a common component to any satellite) and simple addition of a shadow-casting intra-bank barrier. While the method proved to be useful, it is acknowledged that a relatively large amount of error in achieving normal is unavoidable with such an effort. Higher accuracy COTS Sun sensors are available for the same purpose, with of course added but likely acceptable costs. Future work should include and effort to down-select and implement a COTS Sun sensor, while further work using the cost-effective

References

[i] Toorian, A. et al. "The CubeSat Approach to Space Access" Aerospace Conference, 2008 IEEE, March 2008.

[ii] Blocker, A., et.al., "TINYSCOPE – The Feasibility of a 3-Axis Stabilized Earth Imaging CubeSat from LEO", 22nd Annual AIAA/USU Conference on Small Satellites, 2008.

[iii] Lee, E., et.al., "The *.Sat CubeSat bus: When Three Cubes Meet", 19th Annual AIAA/USU Conference on Small Satellites, 2005.

[iv] Dowd, M. "How Rad Hard Do You Need? The Changing Approach to Space Parts Selection", Maxwell Technologies Microelectronics, 2002.

[v] http://www.cubesatkit.com/