AAS 14-038

SPACE LAUNCH SYSTEM ASCENT FLIGHT CONTROL DESIGN

Jeb S. Orr*

John H. Wall†

Tannen S. VanZwieten‡

Charles E. Hall§

A robust and flexible autopilot architecture for NASA's Space Launch System (SLS) family of launch vehicles is presented. The SLS configurations represent a potentially significant increase in complexity and performance capability when compared with other manned launch vehicles. It was recognized early in the program that a new, generalized autopilot design should be formulated to fulfill the needs of this new space launch architecture. The present design concept is intended to leverage existing NASA and industry launch vehicle design experience and maintain the extensibility and modularity necessary to accommodate multiple vehicle configurations while relying on proven and flight-tested control design principles for large boost vehicles.

The SLS flight control architecture combines a digital three-axis autopilot with traditional bending filters to support robust active or passive stabilization of the vehicle's bending and sloshing dynamics using optimally blended measurements from multiple rate gyros on the vehicle structure. The algorithm also relies on a pseudo-optimal control allocation scheme to maximize the performance capability of multiple vectored engines while accommodating throttling and engine failure contingencies in real time with negligible impact to stability characteristics. The architecture supports active in-flight disturbance compensation through the use of nonlinear observers driven by acceleration measurements. Envelope expansion and robustness enhancement is obtained through the use of a multiplicative forward gain modulation law based upon a simple model reference adaptive control scheme.

1 INTRODUCTION

The NASA Space Launch System (SLS) program will enable human access to space at an unprecedented scale, providing exploration-class mission capability to return humans to the moon, explore Mars, and rendezvous with near-earth asteroids. To that end, NASA's development of the SLS launch vehicle employs many new capabilities and responds to numerous challenges in the flight and operation of this large-scale launch system. The development of a robust, scalable, and extensible flight control system design has resulted in a safe and readily operable set of algorithms

*Senior Member of the Technical Staff, Dynamics and Control; The Charles Stark Draper Laboratory, Inc., Jacobs ESSSA Group, Huntsville, Alabama, 35806

†Engineer, Guidance, Navigation, and Control Group; Dynamic Concepts, Inc., Jacobs ESSSA Group, Huntsville, AL, 35806

‡Aerospace Engineer, Control Systems Design and Analysis Branch, NASA Marshall Space Flight Center, AL, 35812

§Senior Aerospace Engineer, Control Systems Design and Analysis Branch, NASA Marshall Space Flight Center, AL, 35812

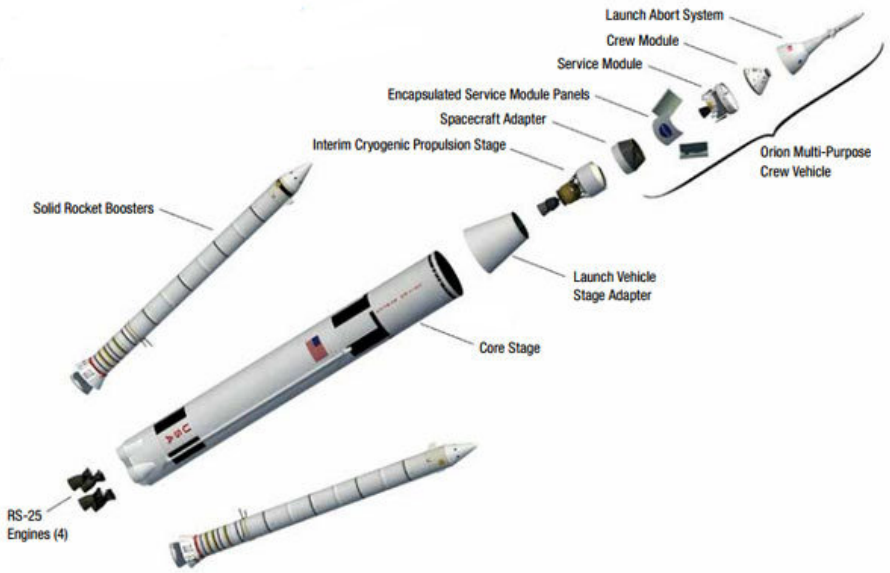

Figure 1. SLS Block I Configuration

that will act as a foundation for high-performance control of the SLS vehicle throughout the flight test and operational phases.

The SLS vehicle, based upon the more than fifty years of extensive NASA launch vehicle design experience, presents a new set of flight control challenges. The integrated vehicle is larger and more massive than any previously flown booster system, and relies on multiple fully vectorable engines to effect control moments. Owing to the high structural efficiency of the integrated system and the large integral propellant tanks, the effects of structural flexibility and sloshing dynamics on the control system are possibly more severe than any previous large-scale launch system. Finally, the stringent reliability and flight certification requirements of a human-rated booster place hard constraints on the types and scale of algorithms and analysis processes that can be applied.

The Space Launch System flight controls team has developed a scalable, modular flight control architecture that addresses the current and future challenges associated with this scale of launch system while maintaining compatibility with classical approaches for launch vehicle control algorithm flight certification. The present architecture leverages extensive NASA and industry design heritage, but relies upon a modern vector-matrix implementation paradigm that considerably simplifies the architecture when applied to the coupled three-axis control design problem. Furthermore, the SLS architecture employs an advanced in-flight load relief algorithm to minimize induced loads due to short-period changes in the wind velocity field along the ascent trajectory, a disturbance compensation algorithm that responds aggressively to bias moments, and a simple adaptive element that improves robustness via on-line modulation of the forward loop gain.

1.1 Space Launch System Overview

The Space Launch System consists of a series of vehicle configurations that leverage heritage Shuttle hardware and processes while enabling large-scale operational flexibility. Two primary configurations are currently in development, consisting of a *Block I* crewed vehicle with the Multi-

Purpose Crew Vehicle (MPCV) as a payload, and a larger cargo carrier configuration, the *Block II* vehicle. The Block I vehicle capability supports a payload mass of 70 metric tons to orbit while the Block II vehicle is designed with a lift capability of 130 metric tons. Both rely on domestically developed high-performance liquid engine technology, the RS-25E, commonly referred to as the Space Shuttle Main Engine (SSME). In addition, the Block I vehicle leverages the five-segment Reusable Solid Rocket Motor (RSRM-V) developed for the Constellation program. The Block II vehicle will utilize an advanced booster technology, possibly a composite case solid motor or a LOX/kerosene liquid engine. A component view of the Block I vehicle is shown in Figure 1.

The Block I vehicle utilizes the Interim Cryogenic Propulsion Stage (ICPS), a human-rated upper stage derived from the Delta Cryogenic Second Stage (DCSS). The larger Block II vehicle will achieve orbit and secondary mission objectives using a NASA-developed Cryogenic Propulsion Stage (CPS), leveraging the J-2X engine developed for the Constellation program.[1]

During the boost phase, ascent dynamics and control are marked by three distinct phases: liftoff and tower clear, high dynamic pressure, and booster thrust tailoff and separation. Guidance is open loop during the boost phase, with steering commands stored as lookup tables in the flight computer prior to launch. During liftoff and tower clear, control authority is allocated to both the boosters and the core engines and the task is to accomplish a near-vertical rise while avoiding contact with the launch tower or other structures and respecting plume impingement limits. The pad separation dynamics must be robust to ground winds; therefore, a "flyaway" maneuver is employed in an open-loop fashion to steer the vehicle away from the tower. This maneuver and the FCS reaction to winds are primary drivers of control power (gimbal angles) during this phase.

During the high dynamic pressure phase, open loop guidance initiates pitch and yaw steering to begin a zero load factor (gravity turn) trajectory while simultaneously rolling the vehicle to a crew heads-down orientation. During the period of maximum dynamic pressure, the vehicle is commanded to steer to zero angle of attack in accordance with the day-of-launch trajectory design that is based upon prelaunch wind measurements. Control power during this phase is driven by guidance maneuvers, particularly in roll, and by high altitude winds. Control allocation begins to blend in full-authority core engine thrust vector control (TVC) as the booster thrust decay event begins. During this phase, control power needs are dominated by yaw moment as a result of side-to-side variations in booster thrust.

Core stage flight may be divided into two phases marked by Encapsulated Service Module/Launch Abort System (ESM/LAS) jettison events. During core stage flight the guidance mode is closed-loop, utilizing the Shuttle-derived linear tangent steering algorithm known as Powered Explicit Guidance (PEG).[2] In the first phase of core stage flight (prior to ESM/LAS jettison) PEG begins to steer the vehicle to the ascent target and must compensate for trajectory errors that may have accumulated during boost. This mode is engaged as early in core stage flight as possible in order to minimize propellant reserves required to achieve the target orbit. As a result, pronounced steering commands and larger gimbal angles appear just after separation. After ESM/LAS jettison, the flight control system generally responds only to small disturbances in the vehicle dynamics due to the changes in the vehicle mass, stiffness, and sloshing propellant as the tanks are emptied.

1.2 Flight Control Design Paradigms

The present architecture was designed to be general, scalable, and extensible. Several considerations were drivers for the flight control design, including a capacity to handle large, non-

axisymmetric vehicles with multiple redundant control effectors, in-flight load relief (angle-of-attack reduction), adequate rejection of unpredictable external disturbances, and linearizable flight control system dynamics so as to allow evaluation using classical frequency-domain stability margin criteria.

All SLS vehicle configurations exhibit 3-axis TVC moment capability with multiple effectors; continuous roll control can be achieved via differential slew of the thrust vectors of nozzles not located on the vehicle centerline. As such, the architecture must accommodate arbitrary effector configurations, which are time-varying due to staging and throttling. The use of multiple effectors leads to a potentially overdetermined solution to inducing control forces on the vehicle, and requires some allocation mechanism to distribute effector commands such that the commanded moments are achieved while simultaneously minimizing some metric of control effort.

The open-loop system with autopilot dynamics must be linearizable such that classical stability margins (gain and phase margins) can be easily generated for robustness analysis. While the use of more advanced stability metrics has not been precluded, extracting or relating the system response to classical stability margins is considered a necessity.

Potential asymmetry in the vehicle geometry leads to the potential for interaction of control axes through nonlinear dynamic effects (gyroscopic coupling), external forces (aerodynamics), and internal dynamics (flexibility, propellant slosh). The design allows for asymmetrically coupled linear feedback gains so as to artificially orthogonalize the dynamic response if desired. Decoupled control is treated as a special case of the generalized, 3-axis control system; however, current SLS configurations do not require use of the cross-axis gain functionality.

Finally, the present system is designed to be compatible with specialized external inputs in addition to standard attitude and rate errors issued from the guidance subsystem. These include programmed test inputs for system identification and delta-command profiles for performing clearance maneuvers, such as during liftoff or staging events.

The fundamental design paradigms that shaped the development of the architecture are as follows:

1. *Rely on simple, proven, flight-tested algorithms and processes.* Based on a heritage of more than fifty years of successful NASA flight controls development for large boosters, the use of classical PID control, multi-station rate gyro blending, linear optimal bending filters, and gain scheduling is retained.

2. *Enhance algorithm capability when warranted with compact and verifiable methods.* The use of optimal reconfigurable linear control allocation has been employed to maximize control authority and enhance fault tolerance, and a novel mechanization of classical load relief has been applied. In addition, robustness enhancement is obtained through the use of a simple model reference adaptive control scheme.

3. *Maximize robustness to failures.* As a program requirement, tolerance of at least one engine failure at any point in the flight regime with negligible impact to flight control performance is supported by the architecture. Robustness to sensor failures and severe off-nominal conditions has been demonstrated through rigorous simulation analysis.

4. *Seamlessly integrate with the SLS program to facilitate flight certification.* In support of concise communication of the design margin from the flight controls element, new metrics, such

as the flight control Technical Performance Metric (TPM), are used to facilitate straightforward assessment of the design's merit and the vehicle capability at the system engineering level.

1.3 Flight Control Architecture Overview

For the purposes of flight control design, the integrated vehicle consists of the vehicle dynamics (attitude dynamics, nozzle and gimbal dynamics, elastic response, sloshing propellant, and aerodynamics), the hydraulic thrust vector control (TVC) actuator dynamics, and sensor dynamics. Based upon the current mission mode and the navigated state, the guidance function produces an inertial attitude command mechanized as a rate- and acceleration-limited quaternion eigenaxis rotation in terms of Euler angle errors. The development of the guidance, steering, and error calculation logic is outside of the scope of this paper but is detailed extensively elsewhere. An overview of the SLS flight control architecture is shown below in Figure 2.

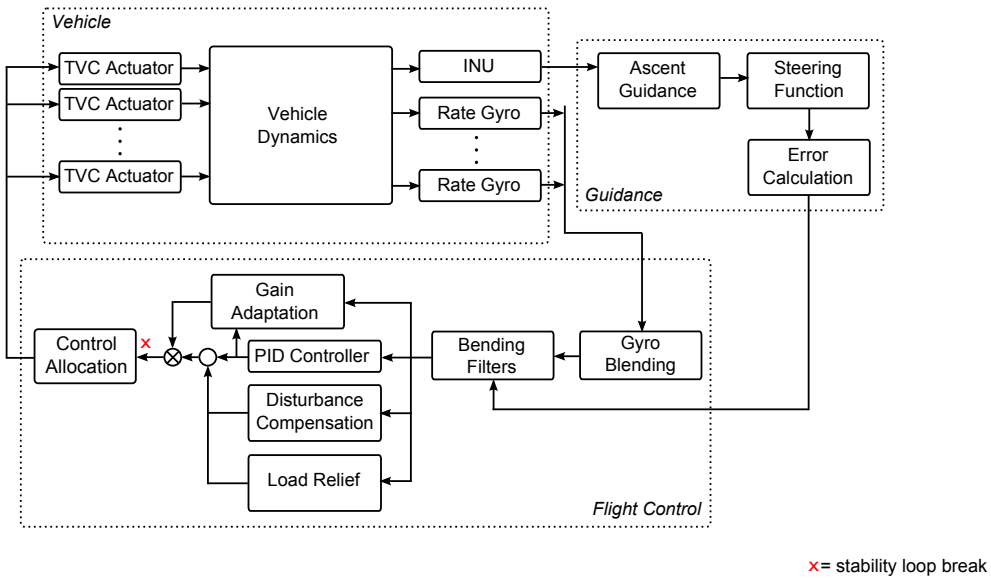

Figure 2. SLS Flight Control Top-Level Architecture

The core flight control algorithms consist of (1) a gyro blender that optimally weights rate measurements from multiple rate gyro stations, (2) an array of linear infinite impulse response (IIR) bending filters that provide frequency-domain shaping to provide active or passive stabilization of vehicle bending and sloshing dynamics, (3) a proportional-integral-derivative control law, (4) angular disturbance compensator and in-flight load relief algorithms, (5) an on-line gain adaptation algorithm, and (6) a real-time multi-effector control allocation law.

2 ALGORITHM DESIGN

The SLS controller is a matrix-vector proportional-integral-derivative algorithm augmented with disturbance compensation elements for translation and rotation. The primary mechanism is feedback control of the vehicle attitude dynamics via sensing of attitude errors and vehicle body rates while simultaneously rejecting parasitic elastic and propellant sloshing dynamic response. Small

perturbations of vehicle attitude are also used to control the vehicle translational state with respect to a trajectory-referenced equilibrium.

While deviations in the vehicle states from the desired states can be represented by small angles, attitude kinematics are fully accounted for in all error computations. The autopilot is driven by small errors that represent the eigenaxis maneuver required to bring the vehicle attitude quaternion into coincidence with the guidance-commanded quaternion.

Vehicle commands are issued in terms of angular acceleration. The choice of commanded angular acceleration (in units of $\mathrm{rad}/\mathrm{sec}^2$) rather than torque for an internal variable is convenient both in that proportional and derivative gains are directly related to the closed loop system natural frequency and damping, and that the resultant gain scaling substantially improves the numerical conditioning of the matrix operations in the control allocation algorithm.

The PID controller is prefaced by linear bending filters which provide appropriate phase shaping and gain attenuation such that vehicle flexibility and fuel sloshing dynamics remain adequately suppressed. Filters are implemented in a series fourth-order transfer function mechanization to avoid numerical difficulties encountered with high order IIR filters (e.g. coefficient truncation and state quantization). In order to eliminate initialization transients when coefficients are updated, a primary/backup filter transition algorithm is employed that allows filters to converge to their quasi-steady output values prior to transitioning them into the flight control command path.

Angular and translational disturbance compensation algorithms (DCA) borrow from the form of the in-flight load-relief / anti-drift algorithms used in the Ares I and Ares I-X autopilots. The DCA elements operate on the principle of constructing estimates of unmeasurable dynamical variables, like angular acceleration. These estimates are used to deduce the magnitude of external disturbances, which are then compensated with an appropriate lateral or angular acceleration command. Since the disturbance compensation algorithms rely on external measurements, filters are provided to remove the effects of observer convergence dynamics, noise, and structural flexibility.

2.1 Sensor Configuration

Adequate vehicle stabilization requires the use of pitch/yaw rate data from supplementary rate gyro assemblies (RGAs) in addition to the primary inertial measurement unit (IMU) located in the forward instrument ring. The location of these sensors is a design variable early in the development of the integrated flight control system. Relying on extensive numerical analysis derived from finite element models of the SLS structure, a set of final vehicle gyro locations was down-selected from candidate configurations based on compatibility with existing vehicle subsystem support for avionics, power, and environmental conditioning.

A configuration similar to the Space Shuttle was the point-of-departure (POD) configuration for this trade study, since it was assumed early in the development that the integrated stack would exhibit similar structural characteristics. In order to achieve substantial cost savings through reduction of the total number of sensors and interfaces, it was shown that adequate elastic mode attenuation could be achieved by eliminating the booster RGAs and utilizing an RGA package in the intertank region (between the primary oxidizer and fuel tanks) as well as an RGA package in the aft thrust structure region. This configuration was baselined for the SLS core vehicle for all block configurations.

2.2 Rate Gyro Blending

In-flight blending of rate signals from multiple gyros on the vehicle structure can provide beneficial attenuation of the sensed flexibility if the gyro locations are such that the rotational component of the eigenvectors are of opposite sign. It is often possible to choose the blending gains such that the modal response is essentially zero for a particular mode, but this condition can only be achieved if the modal eigenelements are known exactly. Due to parameter uncertainty in the elastic model, this condition can never be achieved in practice. Furthermore, the risk of adverse control-structure interaction is increased since the effective mode slope becomes very sensitive (and thus the elastic response changes phase by 180 degrees) near the critical values of the blending gains. The coefficients are therefore chosen using an optimization procedure that balances the competing objectives of modal gain attenuation and robustness with uncertainty in the bending dynamics.

Given a candidate sensor layout, the optimization of sensor blending proceeds from the determination of the attitude and rate channels' frequency response data. Along each controlled axis, the vehicle's SISO attitude channel frequency response is computed by integrating the rigid, elastic, sloshing, and effector dynamics and then re-orthgonalizing a linear model. Target modes in a frequency band of interest are then selected for analysis based upon a weighted modal gain metric. In order to robustly attenuate the frequency response over all ascent flight conditions, an optimal gain set maximizes the attenuation by minimizing the supremum of the maximum singular value of the blended open-loop frequency response. A typical result of response optimization is shown in Figure 3.

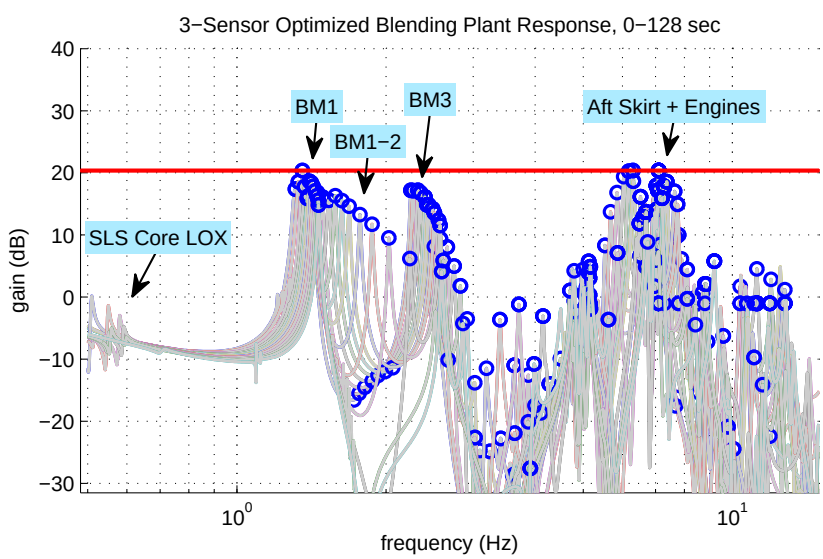

Figure 3. SLS Pitch Axis Spectrum With Blending Optimization

2.3 Bending Filters

The design of bending filters that robustly attenuate or actively stabilize parasitic structural modes is of paramount importance. In the present application, the various configurations admit either active (phase) or passive (gain) stabilization. A numerical optimization technique[3] is utilized to design infinite impulse response (IIR) filters that provide maximum robustness to structural mode

uncertainty while minimizing phase lag at critical control system and sloshing mode frequencies.

Based on conservative heritage design guidelines for boost vehicles,[4,5] filters are designed to attenuate structural flexibility, including all uncertainties, by a minimum of 6 dB below the critical gain in the case that bending modes are passively stabilized. All bending modes are assumed to have a viscous damping ratio not exceeding 0.5% since launch vehicle structural analysis and test has not demonstrated conclusive results supporting damping ratios above this level with flight-like boundary conditions.

Optimal bending filter designs are performed along various segments of the ascent trajectory; trajectory segments are determined based upon major changes in the flight environment. The bending filters are unique in roll, pitch, and yaw due to the dissimilar structural characteristics appearing about each of the control axes. For example, separate 3-axis bending filter sets are used at liftoff and during the maximum dynamic pressure condition, since the vehicle bending characteristics have changed sufficiently over approximately 70 seconds of elapsed burn time. In addition, bending filters are updated upon receipt of a sequencing trigger associated with a discrete change of some element of the vehicle structure such as during booster separation or Launch Abort System (LAS) jettison.

2.4 PID Control Law

Central to the SLS flight control system is a proportional-integral-derivative (PID) control law which provides basic command tracking and stability of the attitude dynamics. The proportional channel operates on the filtered attitude error signal after the DCA translational and auxiliary (flyaway) command inputs are added. The proportional action of the controller is required to maintain stability of the aerodynamically unstable rigid body.

The integral channel applies a scheduled gain to the same input as the proportional channel prior to integration. The integral gain of the system is relatively low with the intention of removing any residual steady state error without compromising command tracking response. The integral gain is scheduled at zero until just after the liftoff flyaway maneuver since the short-period dynamics do not benefit from disturbance rejection and faster flyaway maneuver command tracking can be achieved with pure proportional-derivative feedback. The integral gain is also scheduled to fade to zero during the booster thrust decay and hold until SRB separation to minimize the time over which the integral action reaches steady state during the core burn phase. The input to the integral channel is gained prior to integration to avoid wind-up and to allow faster response to changes in the gain schedule.

The derivative component of the PID control law multiplies a scheduled gain with the filtered rate error after the auxiliary command inputs are added. The derivative component adds damping to the rigid body attitude dynamics, enhances sloshing mode stability, and provides tracking of guidance and flyaway rate commands. The proportional, integral, and derivative channels are summed to produce an angular acceleration command which is passed to the control allocator and angular DCA.

2.5 Disturbance Compensation

The flight control design includes a disturbance compensation function which is divided into separate translation and angular components. The translation algorithm controls the trajectory-relative velocity of the vehicle by acting against disturbance forces with an attitude error bias. The

primary function of the lateral force balance action is to provide load relief by reducing vehicle angle of attack using measured acceleration. The design of the acceleration feedback loop is very similar to that of heritage lateral acceleration feedback designs for launch vehicle load relief, and is partially derived from the NASA Ares I / Ares I-X autopilot designs used during the Constellation program.

Using only proportional-derivative (PD) control of the launch vehicle, the steady state error with respect to guidance commands will be nonzero in the presence of disturbances, thrust vector misalignment, and center of mass deviations. Integral control provides the necessary feedback to drive the steady state error to zero. However, due to its inherent low-pass nature, the integral action is slow to respond to fast-varying disturbances such as thrust imbalance and misalignment during SRB tailoff. While higher integral feedback gains can improve the disturbance rejection bandwidth, this typically incurs significant penalties in attitude transient response performance. The angular DCA algorithm effects faster disturbance rejection in the attitude control loop by aiding the integral action in driving the steady state attitude error to zero.

The basic principle of operation of each channel of the disturbance compensation algorithm is the use of a scalar, nonlinear first-order state observer to provide an estimate of angular acceleration in lieu of having a sensed quantity for the body rate derivative. As the disturbance compensation bandwidth is limited due to higher frequency parasitic dynamics (especially elastic motion), the estimate of angular acceleration is derived only at low frequencies.

2.6 Adaptive Gain Law

The present architecture includes a simple adaptive gain law that acts as a supplemental mechanism to improve robustness to uncertainty in the vehicle dynamics. In order to fully realize the benefits of an adaptive element, the adaptive law has been carefully refined to specifically address the failure modes and uncertainties associated with launch vehicles.[6]

The adaptive concept has completed an extensive and successful development process starting with exploratory studies during the Constellation program. The design paradigm is such that the adaptive law has essentially no action in the vast majority of flight conditions; that is, the adaptation mechanism is not relied upon for successful execution of the flight control objectives in the event that vehicle performance characteristics are within the typically assumed bounds for classical gain-scheduled control design.

The principle of operation in the present system is an increase in system gain to minimize error with respect to a model reference, paired with a gain reduction capability based upon the frequency response characteristics of the closed-loop system. Other system features are included in the implementation to enforce strict adaptation limits that can be derived from the classical stability margins of the nominal system. Under the assumption of decoupled yaw, pitch, and roll control, one adaptation law is used per axis; each adaptation law is independently propagated and has different gain parameters, in general. The output of the adaptive law is an adaptive gain which is used to multiplicatively adjust the output of the baseline controller.

While the baseline controller always provides the basic feedback control action, the total loop gain ranges from the minimum gain to a prescribed upper bound. Both the upper and lower bounds are determined from the classical gain margins for the nominal system model.

2.7 Control Allocation

In order to maximize performance, it is desirable to employ a control allocation mechanism that is capable of effecting the maximum possible angular accelerations on the vehicle within the limits of the control actuators. However, achieving all theoretically feasible control moments requires the use of an online nonlinear optimization scheme[7,8] and such solutions preclude the use of conservative linear stability analysis techniques. Furthermore, the application of algorithms with variable convergence characteristics[9] raises concerns about computational feasibility, and many standard formulations (such as quadratic programming) are not compatible with the types of constraint geometries commonly used in thrust vector control.

The SLS control allocation scheme utilizes a specially parametrized weighted least squares (WLS) generalized inverse designed to maximize maneuvering authority in the pitch and yaw planes and accommodate changes in engine capability in real time. The algorithm effects simultaneous control of the three angular degrees of freedom of the rigid body via a linear transformation such that linear stability analysis techniques can still be applied. Determination of the extents of the maneuvering authority as a function of flight time can be accomplished using rigorous analytical and numerical methods.[10]

Weight computations are performed on-line in the flight software using tabulated *a priori* data detailing the engine locations, vehicle mass properties, and thrust profiles. Online computation allows the algorithm to reconfigure and accommodate a loss of engine thrust, guidance throttling, and the end of the booster burn with a negligible change in the rigid-body stability properties.

3 ANALYSIS METHODS

3.1 Stability Analysis

Data supporting flight certification of the present architecture is accomplished using industry-standard design guidelines for human rated flight control systems and relies heavily on conservative linear stability analysis. In fact, stability analysis is generally only tractable using linear, frequency-domain techniques due to the high order and nonminimum-phase characteristics of the integrated vehicle models when the requisite elastic models are included. Typical stability analyses yield models of orders exceeding 400 that include all first-order coupling effects among the vehicle rigid body modes, sloshing propellant modes, elastic modes, and servodynamics. The systems are reduced to single-input, single-output (SISO) for frequency domain analysis such that the Nyquist criterion can be applied. SISO reduction is accomplished via loop closures such that the loop to be analyzed is broken at the only SISO signal path, the angular acceleration command, as denoted in Figure 2.

Frequency-domain analysis is conducted using two independent methods and simulation results are cross-validated and correlated within acceptable margins of error. Both an analytic linearization of the motion equations and numerical linearizations of a nonlinear simulation are employed. The FRACTAL (Frequency Domain Analysis and Comparison Tool Assuming Linearity) software toolchain is used as the primary frequency-domain environment for design and stability analysis, and its companion tool ASAT (Ascent-vehicle Stability Analysis Tool) is used for in-space and supplementary analyses. FRACTAL and ASAT are based on a rigorous energy-conservative derivation of the perturbation equations of motion using a Lagrangian formulation.[11,12,13] FRACTAL and ASAT were developed and validated during the Constellation program and have heritage to classical frequency-domain analysis approaches for launch vehicles.[14]

Vehicle Type	Response Type	Rigid Body	Slosh (Phase Stabilized)	Slosh (Gain Stabilized)	Bending (Gain Stabilized)
Nominal	Nichols Disc Margin	Ellipse with axes ± 30 deg and ± 6 dB			
	Peak Amplitude	N/A	< +10 dB	N/A	< -10 dB
Dispersed	Nichols Disc Margin	Ellipse with axes ± 20 deg and ± 3 dB			
	Peak Amplitude	N/A	N/A	N/A	< -6 dB

Table 1. SLS Stability Margin Criteria

Both SAVANT[15,16] (Stability Aerospace Vehicle ANalysis Tool) and STARS (Space Transportation Analysis and Research Simulation) are time-domain nonlinear simulations implemented in the MATLAB/Simulink environment that are structured so as to support numerical linearization capability. SAVANT and STARS were originally developed to support the Constellation Ares I-X flight test program and leverage a rich body of flight test data that confirm their reliability as validated, critical math models. Both simulations are formulated using the Newton-Euler approach.

Typical stability margin criteria used during the design process are consistent with extensive NASA experience in the development of robust flight control designs for human-rated systems. Since the open-loop dynamics are at least conditionally stable in gain, several modes of stability must be simultaneously considered in the design. Each is associated with a different dynamic driver in the vehicle plant model. Stability criteria are evaluated both for the nominal parameter set (as design goals) and via the application of uncertainty models using Monte Carlo methods. Stability criteria associated with dispersed (uncertain) models are lower than those associated with the nominal system, but are nonzero so as to ensure a level of residual conservatism even after all uncertainties are applied. An elliptical closest approach (disc margin) criteria, derived from the classical stability margin criteria, is applied to maximize robustness to simultaneous perturbations in gain and phase uncertainty.

The design criteria applied to the SLS vehicle flight control design are summarized in Table 1. A typical 3-axis stability analysis result depicting the relevant metrics in the roll, pitch, and yaw channels is shown in Figure 4.

Assessing vehicle flight control capability at the systems engineering level is complicated by the many metrics of flight control performance that can be used to quantify the state of the design, i.e. classical stability margins, nonlinear time-domain envelopes, etc. This difficulty is compounded by the fact that development programs frequently use the term “margin” to describe a quantity which is allocated to an uncertain design element and expected to be near zero at the time the vehicle design is mature. In contrast, stability margin(s) are such that degradation of margin results in poor performance and some “margin” must be retained to ensure adequate robustness to uncertainty (see, for example, Table 1 above).

To better communicate the present state of the SLS vehicle flight control design during the program evolution, a disc margin criteria has been integrated into the Technical Metrics Plan for the SLS program. The Nichols disc margin is a single scalar metric of performance that quantifies the “margin” with respect to robustness and performance capability.

The concept of a disc margin is commonly associated with the analysis of stability of linear systems with nonlinear feedback.[17] In the usual robust control sense, the disc margin (and the

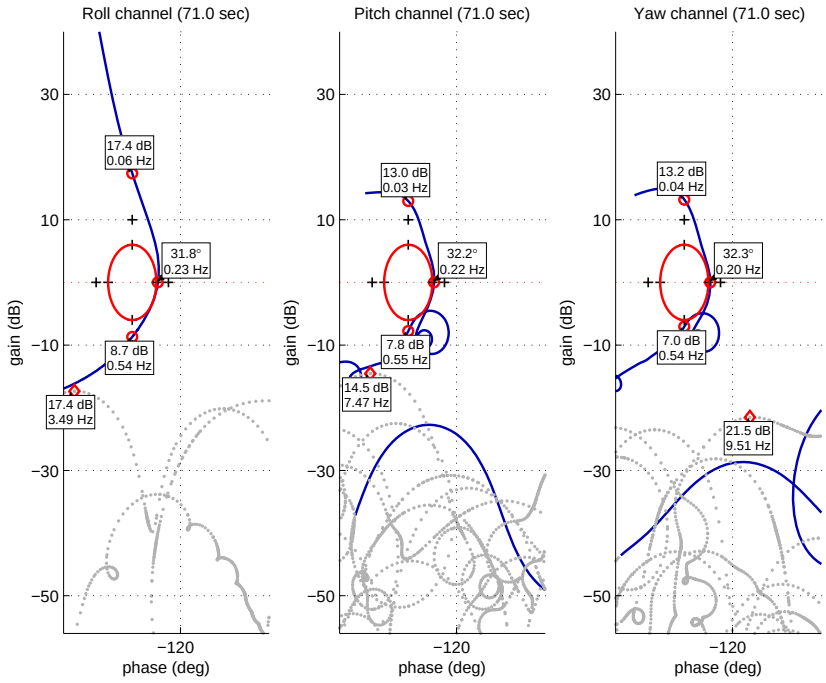

Figure 4. FRACTAL 3-Axis Stability Analysis Example

related circle criterion) defines a region in the complex plane that is an extension of the Nyquist criterion[18] for both SISO and MIMO systems. While the concepts are related, the Nichols disc margin is less analytically rigorous but better tailored to the present application. The flight control TPM provides a conservative lower bound for the classical gain and phase margins and an effective scalar metric to assess the dynamic capability of a launch vehicle.

The disc margin is calculated in the Nichols plane by computing the scale factor of the largest disc that can be inscribed in the interior of the frequency response near the midpoint of the low-frequency (aerodynamic) and high-frequency (rigid-body) crossings of -180 degrees of phase. The centroid of the disc is allowed to vary independently of the forward loop gain. This scale factor is compared with that of a reference disc (having unity scale factor) whose dimensions are based on industry-standard values of gain and phase margin.

3.2 Nonlinear Simulation

MAVERIC (MArshall VEhicle Representation In C)[19,20] is a versatile code used for simulating launch vehicles and spacecraft, at various levels of fidelity, to aid in engineering, design and development. Conceived and developed by NASA's Marshall Space Flight Center (MSFC) during the X-33 technology demonstrator program,[21] MAVERIC has been used extensively for Guidance, Navigation and Control (GN&C) development and the evaluation of numerous experimental spacecraft (X-33, X-37, X-43), launch vehicle concepts (Shuttle variants, reusable launch vehicles and expendables), spacecraft (Lunar Lander, ICPS/MPCV) as well as the more recent Ares I and Ares I-X launch vehicles.[22] While MAVERIC is used as a tool to evaluate vehicle designs and mission profiles for a variety of disciplines, its main purpose is to evaluate and advance the design of GN&C

algorithms for use in flight software. MSFC has the responsibility for the flight software for the SLS program, including GN&C and Mission and Fault Management algorithms.

The SLS Block I vehicle simulation used for ascent dynamics and control consists of two configurations; the integrated stack (core stage, boosters, ICPS and MPCV) for simulating boost stage flight from liftoff to booster separation and the integrated core-payload (core stage, ICPS, MPCV) for simulating core stage flight from booster separation to MECO, plus a coast phase before payload separation. Detailed models are used for propulsion, aerodynamics, winds, mass properties, vehicle flex, propellant slosh, TVC, and GN&C sensors. Parameter variations are supplied with each model to facilitate repeated dispersed simulations for Monte Carlo analysis using a rigorous sampling methodology similar to that used for the Constellation program.[20] The flight control algorithms are coded in the C programming language in an isolated segment of the software, integral with the guidance and navigation algorithms. The GN&C algorithms are mechanized such that they can be extracted from MAVERIC as a stand-alone model for flight software development, hardware in the loop simulations, and verification analyses. The MAVERIC flight control source code is integrated with extensive in-model documentation. This model-based design approach enables progression from the engineering development builds to the certified, fully evaluated flight software without requiring costly and error-prone intermediate algorithm description documents.

MAVERIC is used as the primary tool in the Monte Carlo flight control performance assessment workflow. Extensive statistical data are collected and analyzed each design cycle using several tens of thousands of simulated trajectories with the aforementioned uncertainty models applied. In addition to evaluating navigation, guidance, and flight control performance (navigation errors, attitude errors, rigid-body load indicators, and orbital insertion accuracy), these data are used to mature the vehicle design and assess various trajectory-related factors such as impact footprints, abort triggers, and flight performance reserves.

SUMMARY

NASA's Space Launch System represents a new large-scale space access capability for the United States that presents new and diverse technical challenges for successful, high-performance flight control, especially as they relate to the flexible-body dynamics, loads constraints, propellant slosh, and the allocation of multiple redundant control effectors. The Space Launch System flight controls discipline has leveraged a deep legacy of NASA experience in launch vehicle flight mechanics and analysis to develop a set of tools, algorithms, and processes that will support the SLS program during the next generation of human spaceflight operations.

ACKNOWLEDGMENTS

The authors gratefully acknowledge the substantial contributions of the NASA launch vehicle flight controls community to this work, especially those of Rob Hall, John Hanson, Steve Ryan, Jimmy Compton, Mark West, Don Krupp, and Mark Jackson. In addition, the authors thank Neil Dennehy and Ken Lebsock of the NASA Engineering and Safety Center (NESC) and Garry Lyles, SLS Program Chief Engineer, for ongoing support of adaptive control research and its application to launch vehicles. The authors extend additional gratitude to Jimmy Jang and Abran Alaniz of the Charles Stark Draper Laboratory and Jay Brandon et al. of the NASA Langley Research Center for their outstanding contributions to the state of the art during the Constellation program.

REFERENCES

[1] J. Snoddy, "Development of the J-2X Engine for the Ares I Crew Launch vehicle and the Ares V Cargo Launch Vehicle: Building on the Apollo Program for Lunar Return Missions," in *57th International Aeronautical Congress*, October 2006.

[2] W. T. Schliech, "The Space Shuttle Ascent Guidance and Control," in *AIAA Guidance and Control Conference, 82-1497*, 1982.

[3] J. Orr, "Optimal Recursive Digital Filters for Active Bending Stabilization," in *AAS Guidance, Navigation, and Control Conference, Breckenridge, CO*, 2013.

[4] NASA Space Vehicle Design Criteria (Guidance and Control), "Effects of Structural Flexibility on Launch Vehicle Control Systems," tech. rep., NASA, SP-8036, 1970.

[5] NASA Space Vehicle Design Criteria (Structures), "Structural Interaction with Control Systems," tech. rep., NASA Marshall Space Flight Center, SP-8079, 1971.

[6] J. Orr and T. VanZwieten, "Robust, Practical Adaptive Control for Launch Vehicles," in *AIAA Guidance, Navigation, and Control Conference, Minneapolis, MN, AIAA-2012-4549*, August 2012.

[7] W. Durham, "Constrained control allocation," *J. Guidance, Control, and Dynamics*, vol. 16, no. 4, pp. 717–725, 1993.

[8] W. Durham, "Constrained control allocation: Three-moment problem," *J. Guidance, Control, and Dynamics*, vol. 17, No. 2, pp. 330–336, 1994.

[9] M. Bodson, "Evaluation of optimization methods for control allocation," in *AIAA Guidance, Navigation, and Control Conference, Montreal, CA*, AIAA, August 2001.

[10] J. Orr, *High Efficiency Thrust Vector Control Allocation*. PhD thesis, University of Alabama in Huntsville, 2013.

[11] J. Orr, M. Johnson, J. Wetherbee, and J. McDuffie, "State Space Implementation of Linear Perturbation Dynamics Equations for Flexible Launch Vehicles," in *AIAA Guidance, Navigation, and Control Conference, Chicago, Illinois, AIAA-2009-5962*, 2009.

[12] J. Jang, A. Alaniz, R. Hall, N. Bedrossian, C. Hall, and M. Jackson, "Design of Launch Vehicle Flight Control Systems Using Ascent Vehicle Stability Analysis Tool," in *AIAA Guidance, Navigation, and Control Conference, Portland, OR*, August 2011.

[13] J. Orr, "A Flight Dynamics Model for a Multi-Actuated Flexible Rocket Vehicle," in *AIAA Atmospheric Flight Mechanics Conference, Portland, OR, AIAA-2011-6563*, 2011.

[14] J. Frosch and D. Vallely, "Saturn AS-501/S-IC Flight Control System Design," *J. Spacecraft*, vol. 4, no. 8, pp. 1003–1009, 1967.

[15] K. Betts, C. Rutherford, J. McDuffie, M. Johnson, M. Jackson, and C. Hall, "Time-Domain Simulation of the NASA Crew Launch Vehicle," in *AIAA Modeling and Simulation Technologies Conference, AIAA 2007-6621, Hilton Head, SC*, 2007.

[16] K. Betts, C. Rutherford, J. McDuffie, M. Johnson, M. Jackson, and C. Hall, "Stability Analysis of the NASA Ares I Crew Launch Vehicle Control System," in *AIAA Guidance, Navigation, and Control Conference, Hilton Head, SC*, August 2007.

[17] H. K. Khalil, *Nonlinear Systems, Second Ed.* Prentice Hall, 1996.

[18] J. D'Azzo and C. Houpis, *Feedback Control System Analysis and Synthesis*. McGraw-Hill, 1960.

[19] J. Hanson, C. D., G. Dukeman, J. Mulqueen, and J. McCarter, "Ascent, Transition, Entry, and Abort Guidance Algorithm Design for the X-33 Vehicle," in *AIAA Guidance, Navigation, and Control Conference, Boston, MA, AIAA-1998-4409*, August 1998.

[20] J. Hanson and C. Hall, "Learning About Ares I from Monte Carlo Simulation," in *AIAA Guidance, Navigation, and Control Conference, Honolulu, HI, AIAA-2008-6622*, 2008.

[21] C. Hall and H. Panossian, "X-33 Attitude Control Using the XRS-2200 Linear Aerospike Engine," in *AIAA/ASME/SAE/ASEE Joint Propulsion Conference and Exhibit, Los Angeles, CA, AIAA-1999-2936*, June 1999.

[22] C. Hall, C. Lee, M. Jackson, M. West, M. Whorton, J. Brandon, R. Hall, J. Jang, N. Bedrossian, J. Compton, and C. Rutherford, "Ares I Flight Control System Overview," in *AIAA Guidance, Navigation, and Control Conference, Honolulu, HI, AIAA-2008-6287*, August 2008.

SLS
Space Launch System

Space Launch System Ascent Flight Control Design

Jeb S. Orr, Ph.D.
The Charles Stark Draper Laboratory, Inc.
Jacobs ESSSA Group

John H. Wall
Dynamic Concepts, Inc.
Jacobs ESSSA Group

Tannen S. VanZwieten, Ph.D.
Charles E. Hall
NASA Marshall Space Flight Center
Control Systems Design and Analysis Branch (EV41)

2014 American Astronautical Society (AAS) Guidance, Navigation, and Control Conference
Breckenridge, CO Jan 31-Feb 5, 2014

Introduction

- **Space Launch System (SLS)**
  - NASA-developed launch vehicle for large-scale (exploration-class) crew and cargo access
  - Shuttle-derived hardware and processes leveraging Constellation program development experience (tanks, engines, boosters)
  - Primary development configurations are 70t crew and 130t cargo

Vehicle	Booster	Core Stage	Upper Stage	Cargo
70t (10002) *Block I*	5 segment RSRMV	ET derived, 4x RS-25	ICPS, RL-10	MPCV (crew)
130t (21002) *Block II*	Advanced booster	ET derived, 4x RS-25	CPS, 2x J-2X	TBD

- **Program schedule**
  - SRR/SDR Q2 FY12 *completed*
  - PDR ~Q3 FY13 *completed*
  - CDR ~Q3 FY14
    - Abort system tests ~Q4 FY15
    - Exploration Mission (EM-1) (uncrewed, Block I) – ~Q1 FY18
    - Exploration Mission (EM-2) (crewed, Block I) – ~Q1 FY22

SLS Flight Control Challenges

- **A new set of launch vehicle flight control design challenges**
  - Large, highly flexible vehicle structure with non-planar bending characteristics
  - Complex TVC system with multiple fully actuated engines
  - Massive propellant tanks with lightly damped lateral sloshing modes
  - Uncertain payload envelope with parasitic dynamics (elastic, slosh)
  - Highly optimized trajectories yielding widely varying operating conditions
  - Aggressive robustness and redundancy requirements driven by human rating

Flight Control System Overview

- **PID + linear bending filters is the architecture of choice**
  - Flight heritage, straightforward analysis, fundamentals understandable by non-controls engineers
- **Decoupled-axis duplicate pitch/yaw designs do not generalize**
  - MOI, control effectiveness varies with respect to body axis
  - Aerodynamic cross-coupling may be significant
- **Value added by augmenting PID/filters with a disturbance compensation algorithm**
  - Acceleration feedback (in some form) provides control over translational state of the system, which may be desirable for several reasons (load relief, drift reduction, lateral maneuvers, tower clearance)
  - Generalization of classical load relief (acceleration feedback) control
  - Includes a component that estimates bias angular accelerations
    - Better performance can be obtained than with integral control alone with respect to the same stability margin constraints

General Architecture Considerations

- **Use of multiple actuators necessitates an allocation algorithm**
  - Allocate actuator deflection to minimize some weighted figure of merit like total deflection (steering losses, control authority) or actuator rate (capabilities)
  - Can handle actuator failures based on external notification

- **Optimal allocation can be achieved with good accuracy based on combination of *a priori* data and flight-critical measurements**
  - Multiple phases, throttled engines
    - Control effectiveness is a function of time, propellant remaining, throttle, altitude, etc
  - Transport delay and actuator dynamics are variable with allocation
    - *Special feature of TVC & flex dynamics: mixing affects stability and loads!*

- **FCS design is more convenient in terms of angular acceleration than torque**
    - Eliminates some units and scaling issues in design of interacting parts
    - Well-conditioned matrix manipulations for control allocation

Flight Control Design Paradigms

- **Rely on simple, proven, flight-tested algorithms and processes**
  - Classical PID control, gyro blending, linear bending filters, gain scheduling
  - Extensive frequency-domain and time-domain robustness
  - Algorithm and flight software commonality across all SLS platforms (common autopilot)

- **Enhance algorithm capability when warranted with compact and verifiable methods**
  - On-line optimal linear control allocation
  - High-performance acceleration based in-flight load relief capability
  - Model reference gain adaptation with spectral feedback

- **Maximize robustness to failures**
  - Tolerate at least one engine failure at any point in the flight regime with negligible impact to flight control performance
  - Demonstrate robustness to sensor failures and severe off-nominal conditions

- **Seamlessly integrate with the SLS Program to facilitate flight certification**
  - Shift toward TPM (Technical Performance Metric) reporting rather than classical stability margins and transient response characteristics only
  - Opens the design space and burdens the flight control designer (rather than systems engineering) with assessing the quality of the design at the lowest possible level

SLS FCS Architecture

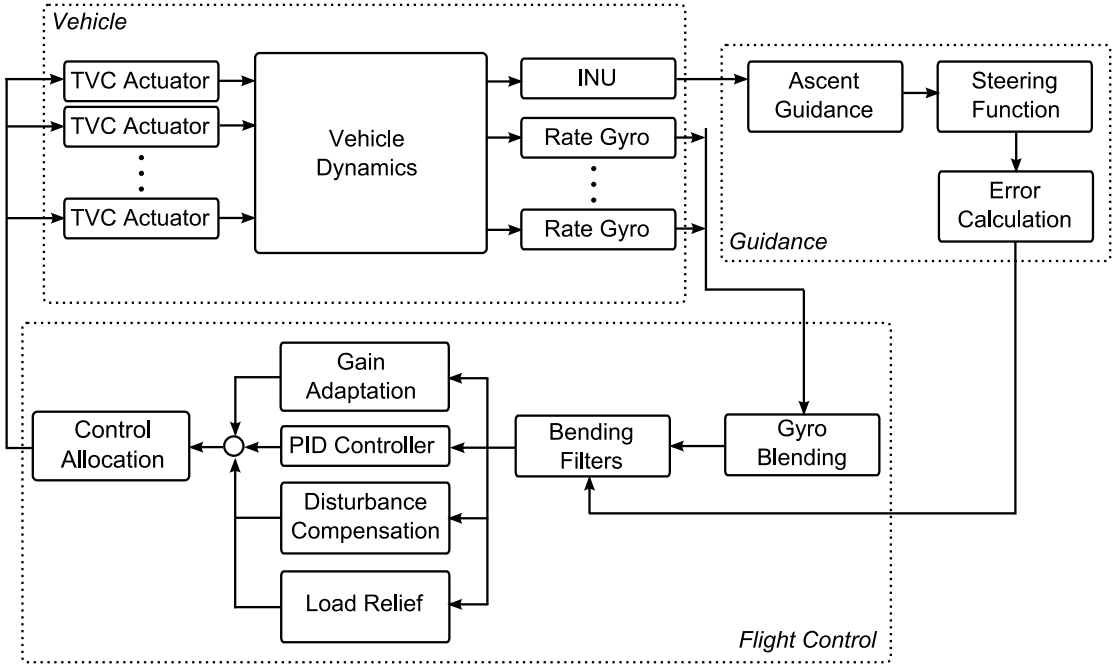

- **Integrated vehicle with control effectors and transducers**
  - Vehicle controlled and parasitic dynamics (rigid body rotation and translation, propellant slosh, elasticity), hydraulic thrust vector control actuators, IMU + multiple rate gyros
- **Guidance algorithms**
  - Open loop boost pitch program, Shuttle-derived linear tangent law (PEG) guidance, intelligent vehicle steering
- **Flight control algorithms**
  1. Rate gyro blender
  2. Bending filters
  3. PID controller
  4. Load relief and disturbance compensation
  5. Gain adaptation law
  6. Real-time fault-tolerant optimal control allocation (OCA) algorithm

Rate Gyro Blending

- **Blending of multiple rate gyro signals is a well-known approach to mitigating excessive structural response**
  - The positive and negative contributions of the modal elastic response at the sensor (mode slope or spatial shape function derivative) can be made to cancel at some nonzero positive weighting
  - This is an optimal zero placement problem
  - Practical blending must be robust to uncertainty in the structural dynamics
  - Location of sensors is a design variable
  - Numerical optimization is used to maximize robustness and preserve phase shape for certain modes (e.g. phase stable modes)

Design optimization methodology

Minimize

$$J(\alpha) = \sum_{t_k} \sup_{\omega} \left\{ \left| k_d^k \sum_{i=1}^{q} \alpha_i H_{\mathrm{rat},i}^k(j\omega) + k_p^k H_{\mathrm{att}}^k(j\omega) \right| \right\}$$

subject to

$$0 \le \alpha_i \le 1$$

$$\sum_{i=1}^{q} \alpha_i = 1$$

where k is the number of model times, q is the number of sensors, and $\alpha \in \mathbb{R}^q$.

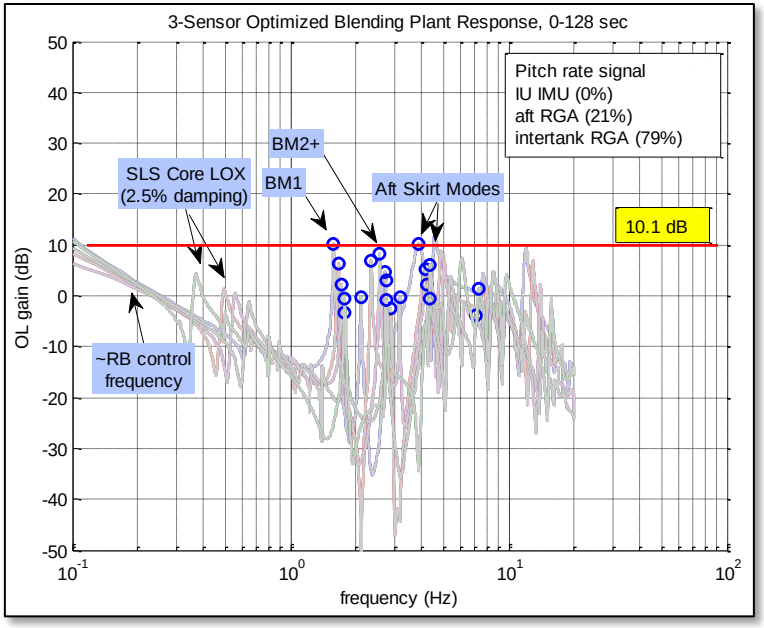

Sensor Trade Studies

- Various RGA locations considered to maximize robustness
- Configuration 2 POD (Shuttle derived), configuration 3 baselined

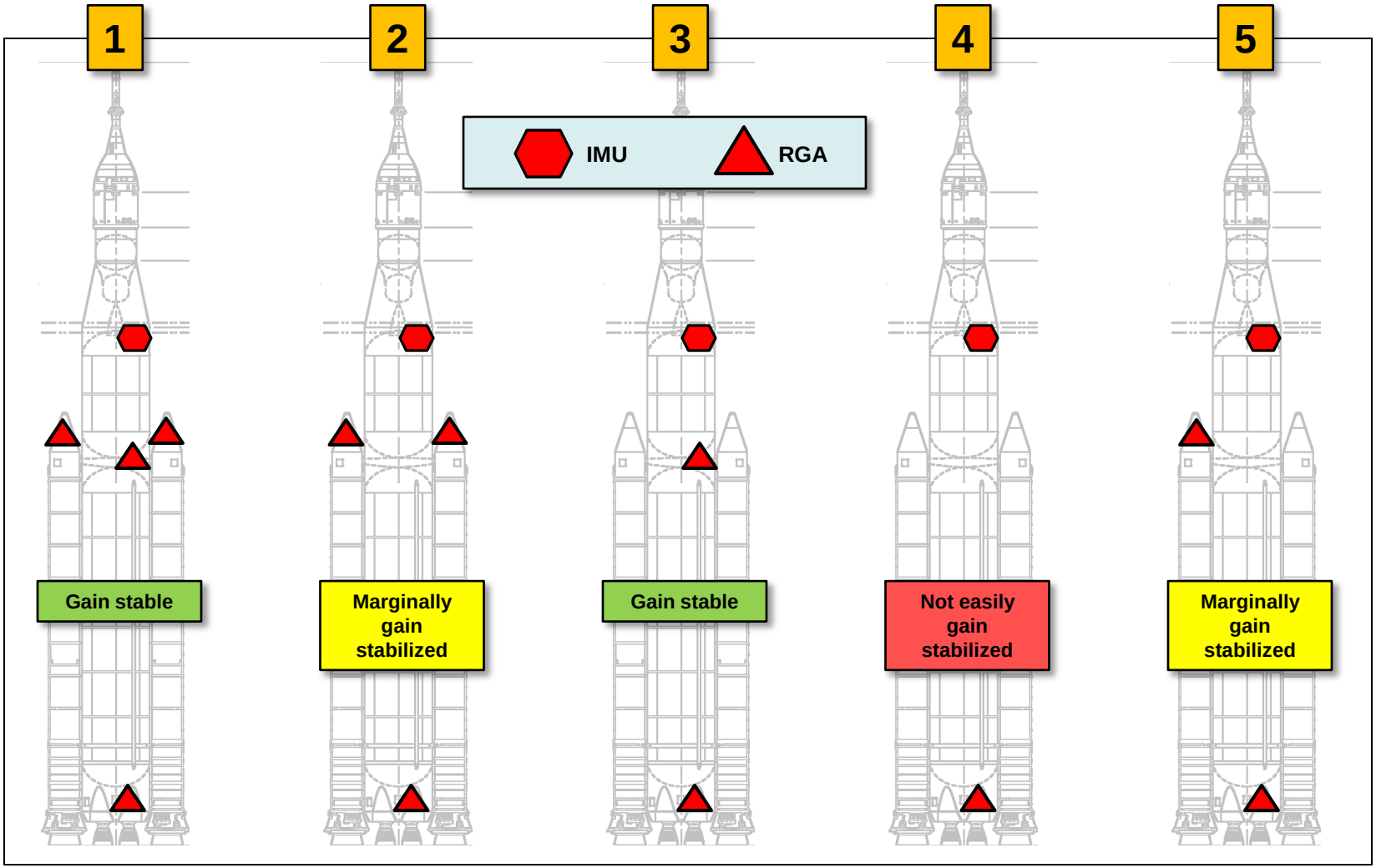

Bending Filters

- Autopilot bending filter design usually assumes 0.5%-1.0% structural damping for design
- Test data indicates lateral bending mode damping consistent with this assumption
- Ares I design: 0.5% (not dispersed)
- Ares I-X design: 1.0% (dispersed ±0.5%)
  - Tested at ~0.2% in VAB prior to flight
- Filters are designed to either phase-stabilize or attenuate flexibility with sufficient margin (~6-10 dB)

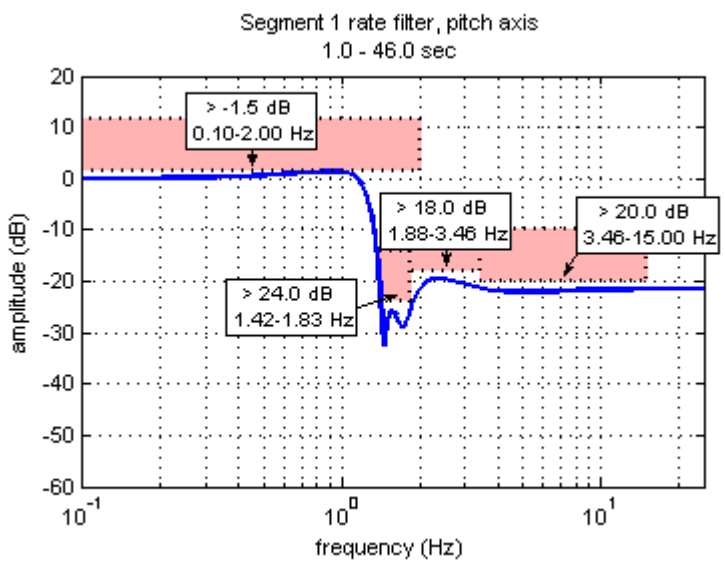

Vehicle	Closed-loop rigid-body frequency (Hz)	Vibration mode	Frequency* (Hz)	Damping† ratio	
Atlas/Able-4B	0.40	First	2.7		
		Second	6.3		
		Third	12.7		
Atlas/Agena/OAO	0.40	First	3.6	0.007	Test
		Second	7.2	—	
		Third	8.2	0.016	
		Fourth	9.5	0.012	
		Fifth	15.0	0.012	
Atlas/Centaur/ Surveyor	0.42	First	2.0	0.019	
		Second	5.2	0.013	
		Third	6.9	0.019	
Thor/Delta or Agena	0.20	First	2.2	0.007	Estimated
		Fourth	17.0	0.010	
Titan III-C Stage 0	0.25	First	1.8	0.008	
		Second	2.9	0.010	
		Third	5.4	0.010	
		Fourth	>6.5	0.015	
Upgraded Saturn I (SAD-6) (dynamic test vehicle)		First	1.7	0.008	Test
		Second	3.3	0.009	
		Third	4.1	0.014	
		Fourth	5.0	0.008	
		Fifth	5.6	0.006	
		Sixth	7.2	0.007	
Upgraded Saturn I (AS-205)	0.15	First	1.1	0.005	Estimated
		Second	2.2	0.005	
		Third	3.8	0.005	
		Fourth	5.8	0.005	
		Fifth	8.4	0.005	
		Sixth	10.0	0.005	
Saturn V/Apollo	0.20	First	1.0	0.005	Test
		Second	1.7	0.007	
		Third	2.3	0.006	
		Fourth	3.0	0.010	

Calculated

In-Flight Load Relief (IFLR) and Disturbance Compensation Algorithms (DCA)

- **IFLR has been generalized into angular/translational state observers**
  - The algorithms are in essence smooth differentiators.
  - We take quantities we know (commanded angular and lateral acceleration, angular rates) …and estimate quantities we don't know and can't measure
  - The concept of disturbance estimation and compensation is not new for launch vehicles – similar (linear) implementations were used on Ares, Shuttle, etc.

- **Translational DCA example: for LR feedback, we want $\ddot{r}_B$, the acceleration at the CG**
  - The sensed acceleration, $\ddot{r}_S$, neglecting high-order and elastic effects, is given by

$$\ddot{r}_S = \ddot{r}_B + \dot{\omega}^{\times} r_{BS} + \omega^{\times}\omega^{\times} r_{BS}$$

  - We want to extract the body acceleration. We can subtract the last term, but the second term requires a measurement of $\dot{\omega}$ which we do not have.
  - A nonlinear observer is used to estimate $\dot{\omega}$ from ω, and extract the CG acceleration:

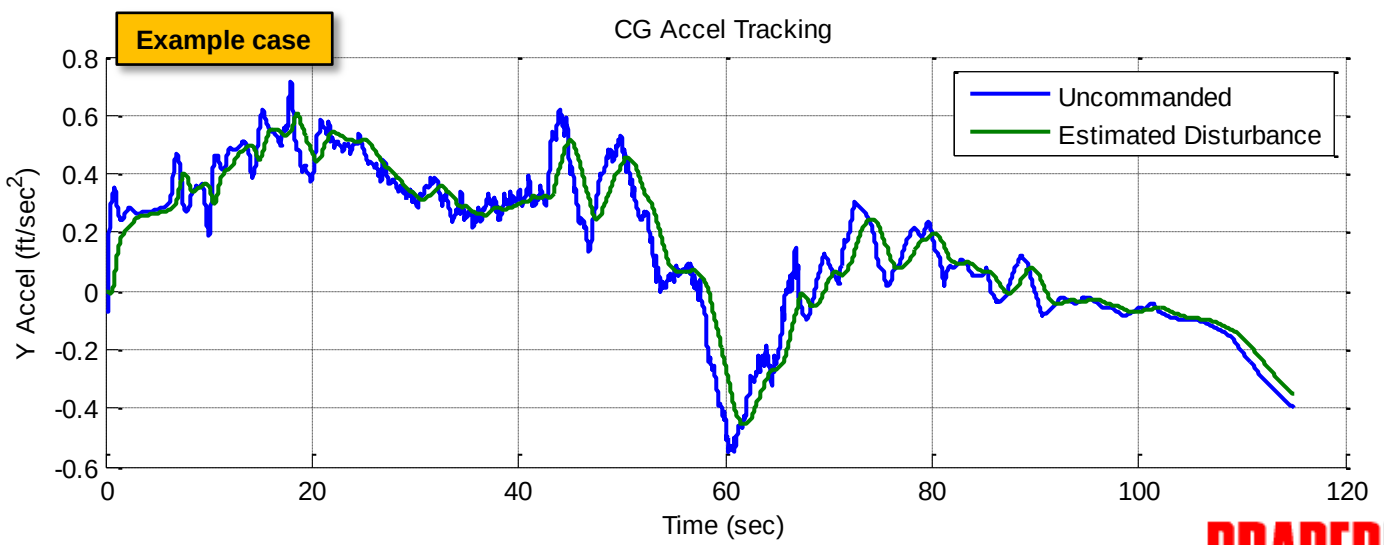

Adaptive Gain Augmentation

- **In the absence of vehicle or environmental uncertainty, a fixed-gain controller is optimized prior to flight (no motivation for adaptation)**
  - Conservatism in launch vehicle design generally yields well-performing classical controllers
  - There is no desire to improve on the well-tuned baseline control system design for nominal cases
- **Adaptive control provides additional robustness by using sensed data to adjust the gain on-line**

AAC Objectives

- "Do no harm"
  - Maintain consistency with classical design approach
  - Protect nominal control gains
- Increase robustness; prevent / delay loss of vehicle (LOV)

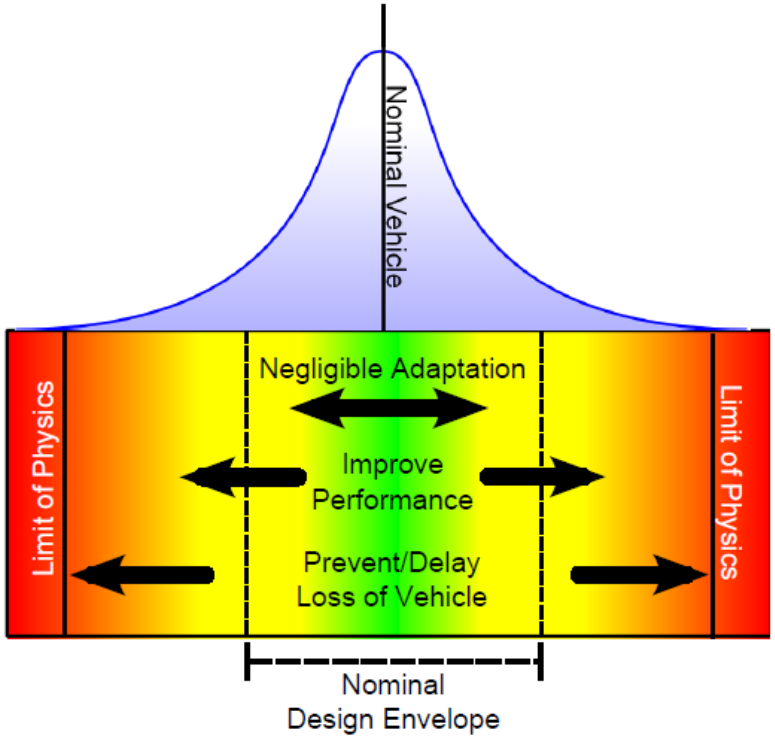

Adaptive Gain Modulation

- Launch vehicles are often conditionally stable due to competing objectives of *unstable aerodynamics* and *parasitic internal dynamics*
- Because of uncertainty in models, we have to design with sufficient *gain margins*

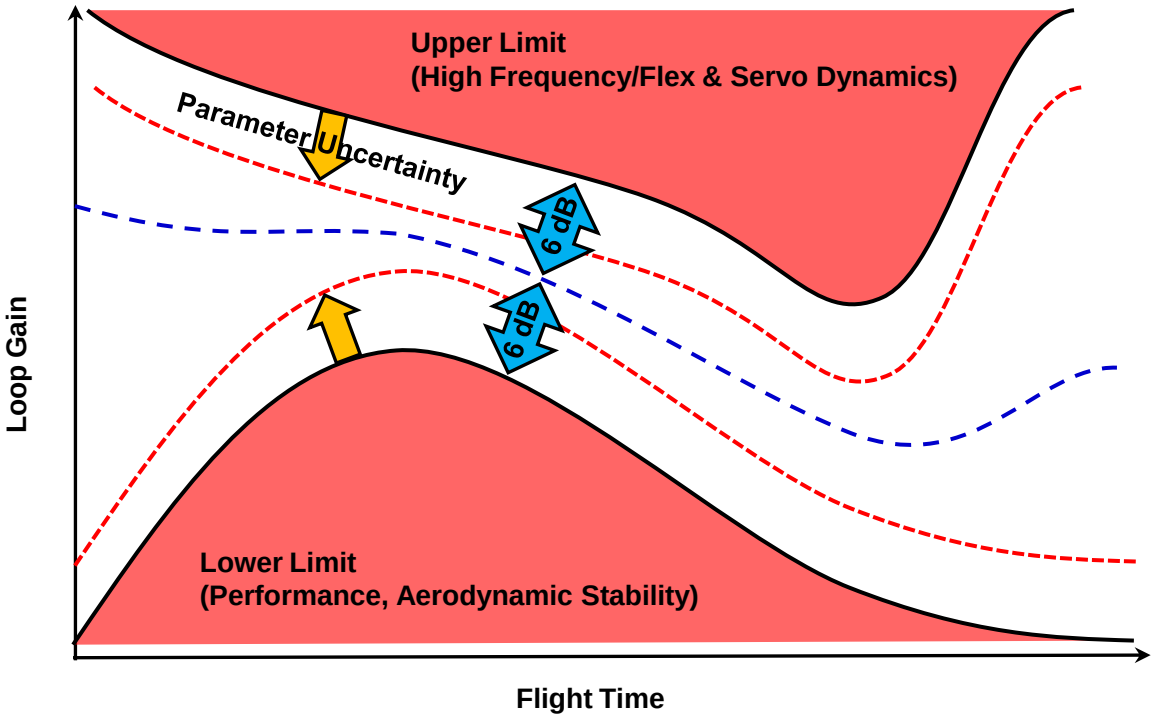

- *Adaptive gain augmentation senses off-nominal upper and lower limits in real time*

Spectral Damper Concept

- **High-frequency closed-loop spectrum under high forward loop gain can be readily deduced from the open-loop frequency response**
  - Correlation allows design of spectral damper filters
  - Used directly to determine high-pass cutoff frequency specification

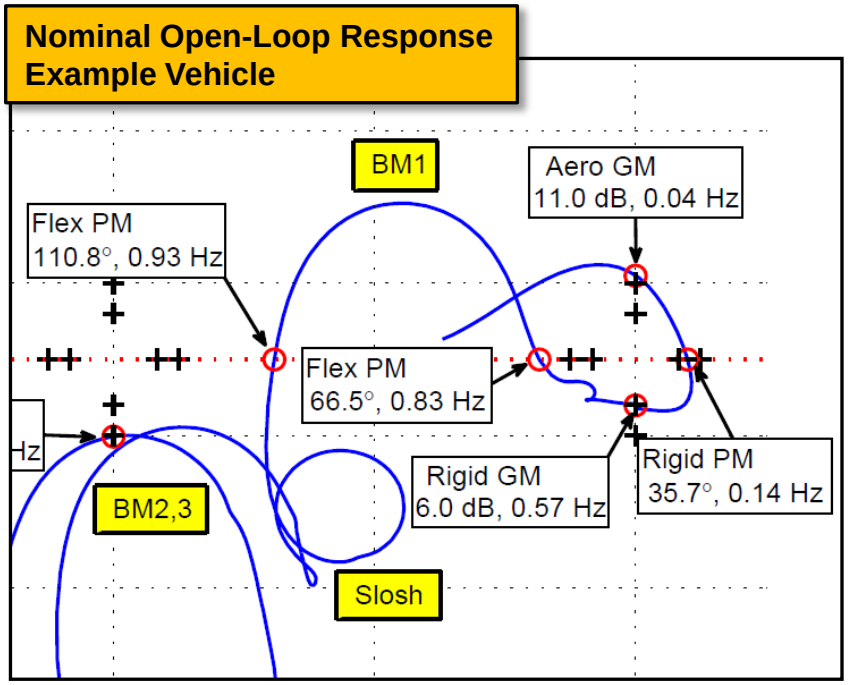

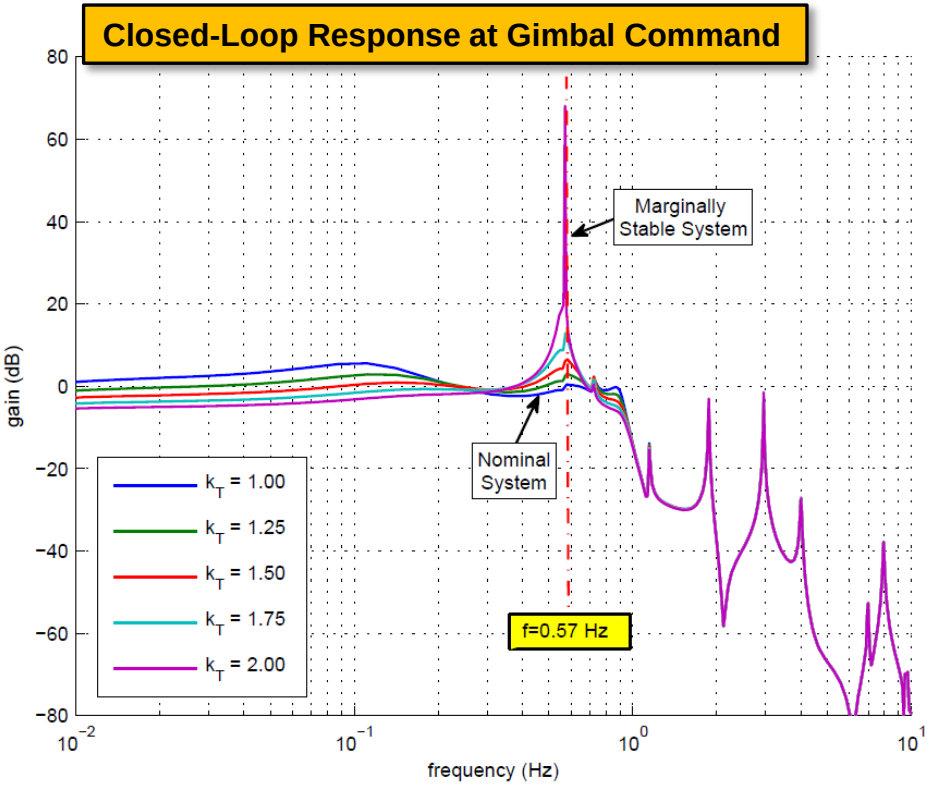

Adaptive Augmenting Concept

- **Assume a well-tuned classical controller for the nominal system**
  - The forward loop gain k_T is augmented by a signal k_a
    - The total gain is formed from a fixed minimum gain and the augmenting gain;

$$k_T = k_0 + k_a$$

  - Multiplicative augmentation is easy to assess in terms of gain margin
  - The update law for the augmenting signal depends on the command, sensed attitude and rate, and the baseline controller output

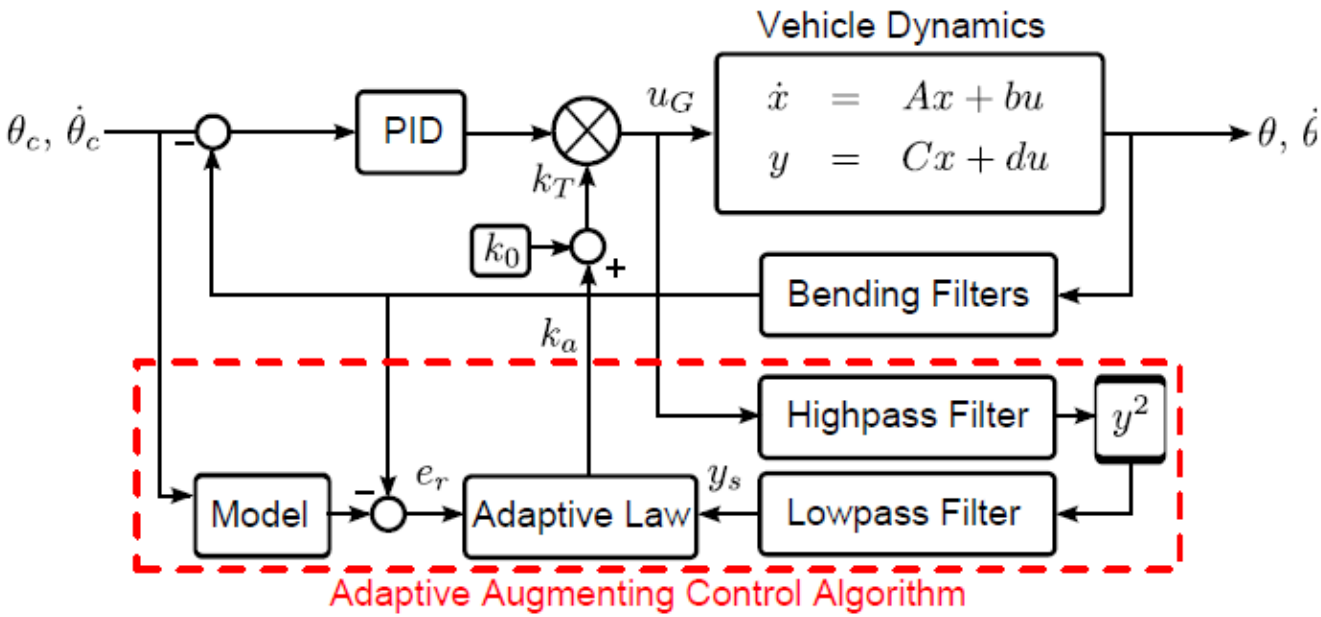

Example: Recovery From Unstable Bending

- **Demonstration case where baseline controller induces structural resonance**
  - Bending parameters are well-outside 3-sigma bounds for robust design
  - Adaptive controller reduces gain to bring bending to stable limit cycle
  - System slowly recovers lost performance as BM1 shifts up in frequency during flight

Example Vehicle

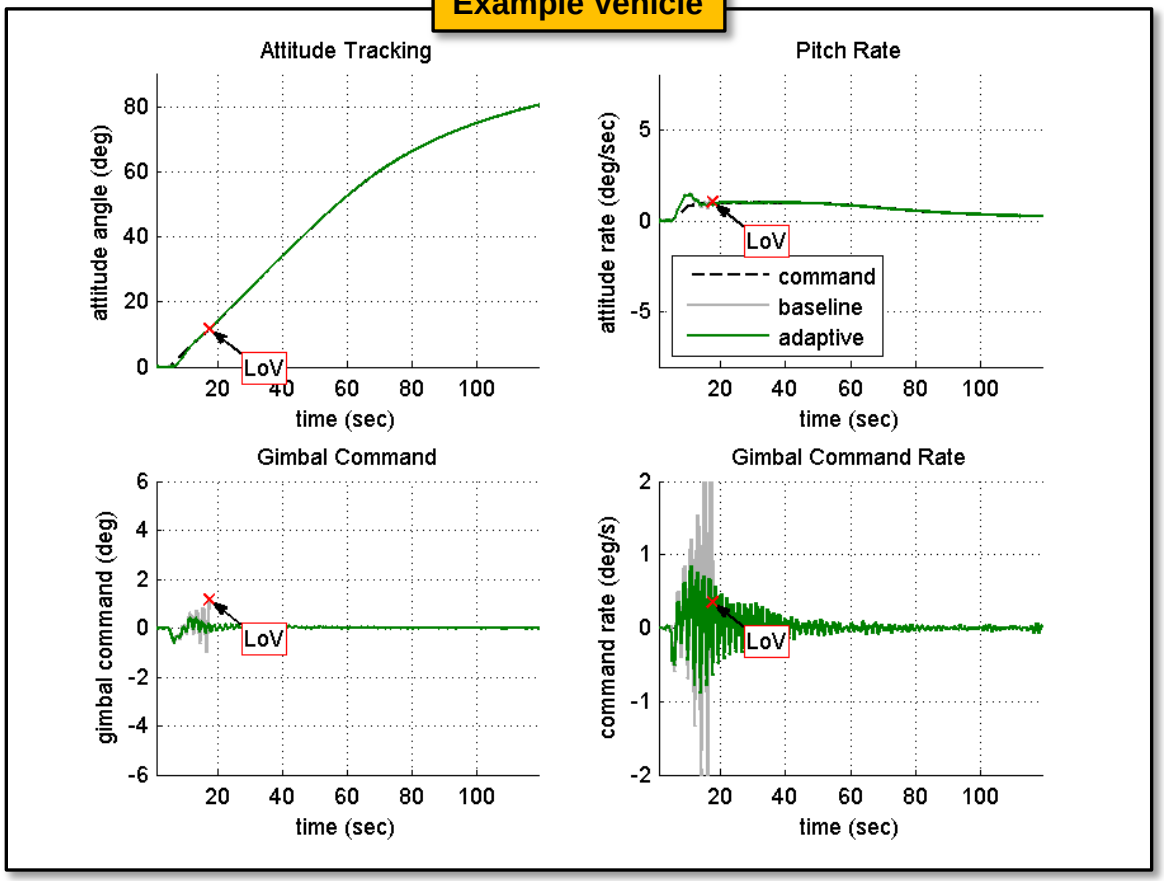

Optimal Control Allocation

- **Multi-actuated thrust vector controlled systems are well-posed for control allocation**
  - Redundant control authority in three axes with two or more nozzles
  - Some configurations may have nine or more nozzles, each with two degrees of freedom
- **Solutions to the constrained allocation problem exist and can be implemented online**
  - In the face of constraints, we must solve an LQ or LP using an iterative algorithm
  - May not yield a moment collinear with command
  - Other constrained solutions include daisy chaining, etc.
  - A nonlinear solution: does not directly admit linear stability analysis
- **The constrained thrust vector control allocation problem differs from the aircraft problem**
  - Each control input has two degrees of freedom
  - Saturation constraints are insufficient to represent the constraint boundary. Coupled constraints apply to **two** degrees of freedom each
  - Due to significant servoelastic coupling, the **choice of effector mixing** at a given flight condition **affects the stability of the closed-loop structural-dynamic system**
  - **Linear allocators** are preferred to enable **linear stability analysis** of the short period dynamics for flight certification
  - **A linear allocator can be computed online** based on optimal parameterization (e.g., a weighting matrix)

Candidate Allocator Approaches

- **On-line Optimization**
  - LQ/LP
  - Must consider convergence, stability analysis, computational expense
- **Generalized Inverse Matrix Lookup**
  - Interpolation of matrix do not give exact results
  - Requires substantial data storage for sufficient resolution
- **Fixed polarity allocator with Vehicle/Engine Properties Scaling**
  - Shuttle-like approach
  - Does not maximize the attainable moment
  - Can adjust to guidance throttling
- **Fixed Allocator (Polarity Matrix)**
  - Gains contain engine & vehicle properties
  - Does not maximize the attainable moment
  - Steering loss & local thrust structure loads

- **Weighted Least Squares Cyclic Computation**
  - The best solution for launch vehicle application
  - Reconfigurable In-flight to anomalies for which the system is prepared (engine out)
  - Can adjust to guidance throttling
  - Can maintain high allocation efficiency for many geometries

Primary Design Tools and Processes

- **POST *[Program for Optimizing Simulated Trajectories]* (LaRC / MSFC)**
  - 3-DoF trajectory optimization, guidance design, performance analysis
- **MAVERIC *[Marshall Aerospace VEhicle Representation in C]* (MSFC)**
  - 3-DoF / 6-DoF flight mechanics simulation with high-fidelity elastic, slosh, actuator, atmospheric models
- **FRACTAL *[Frequency Response Analysis and Comparison Tool Assuming Linearity]* (MSFC)**
  - High-fidelity 6+-DoF perturbation analysis engine with parametric optimization capability

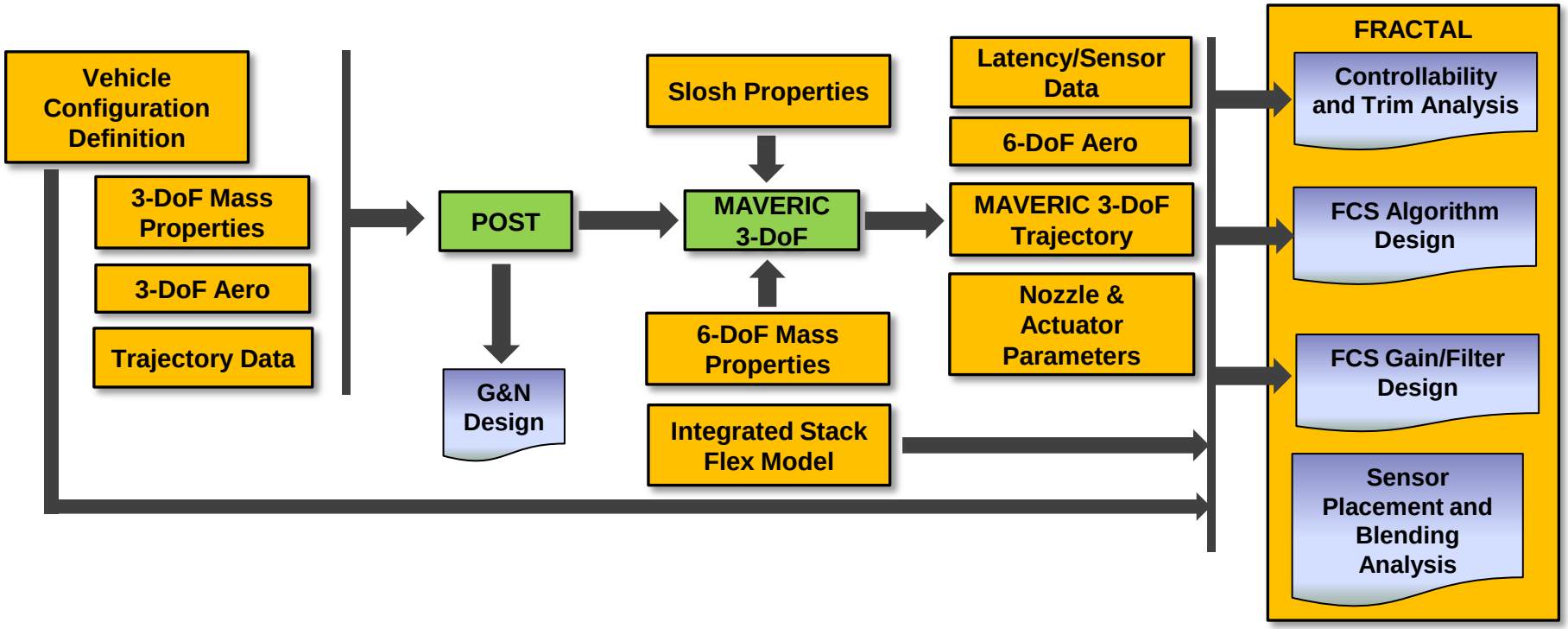

Supporting Design Tools and Processes

- **CLVTOPS *[TREETOPS-derived]* (MSFC)**
  - Multiple flexible body dynamic simulation, separation analysis, liftoff clearance analysis
- **SAVANT *[Stability Aerospace Vehicle ANalysis Tool]* (MSFC)**
  - 6+-DoF *Simulink*®-based flight mechanics simulation supporting numerical linear stability analysis
- **FRACTAL *[Frequency Response Analysis and Comparison Tool Assuming Linearity]* (MSFC)**
  - Large scale Monte Carlo frequency domain analysis

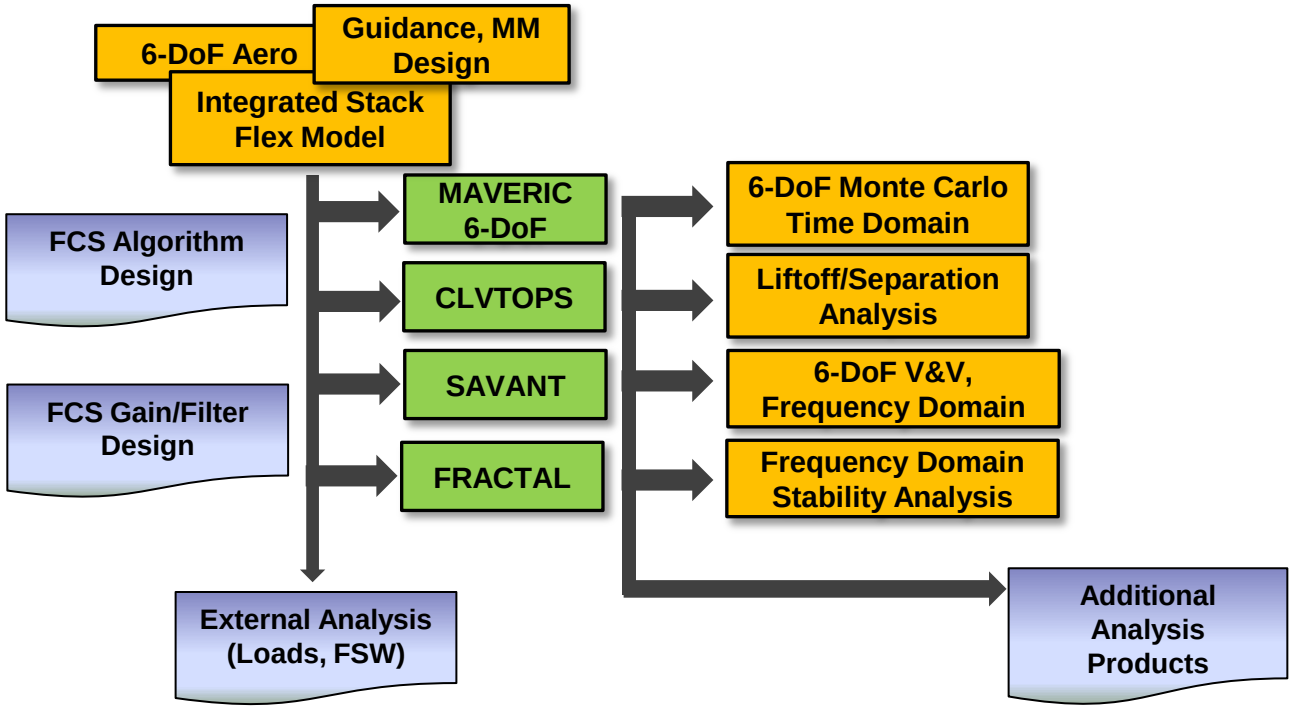

Summary

- NASA and contractor teammates have developed a robust, scalable design philosophy for SLS flight control
- A careful balance of modern and heritage design principles maximizes performance and overall mission capability
- The present architecture will provide robust flight control for the next generation of NASA manned launch vehicles