Low Speed Wind Tunnel Test

9x15 LSWT

9x15 Tunnel Installation with Historical Baseline Blade set

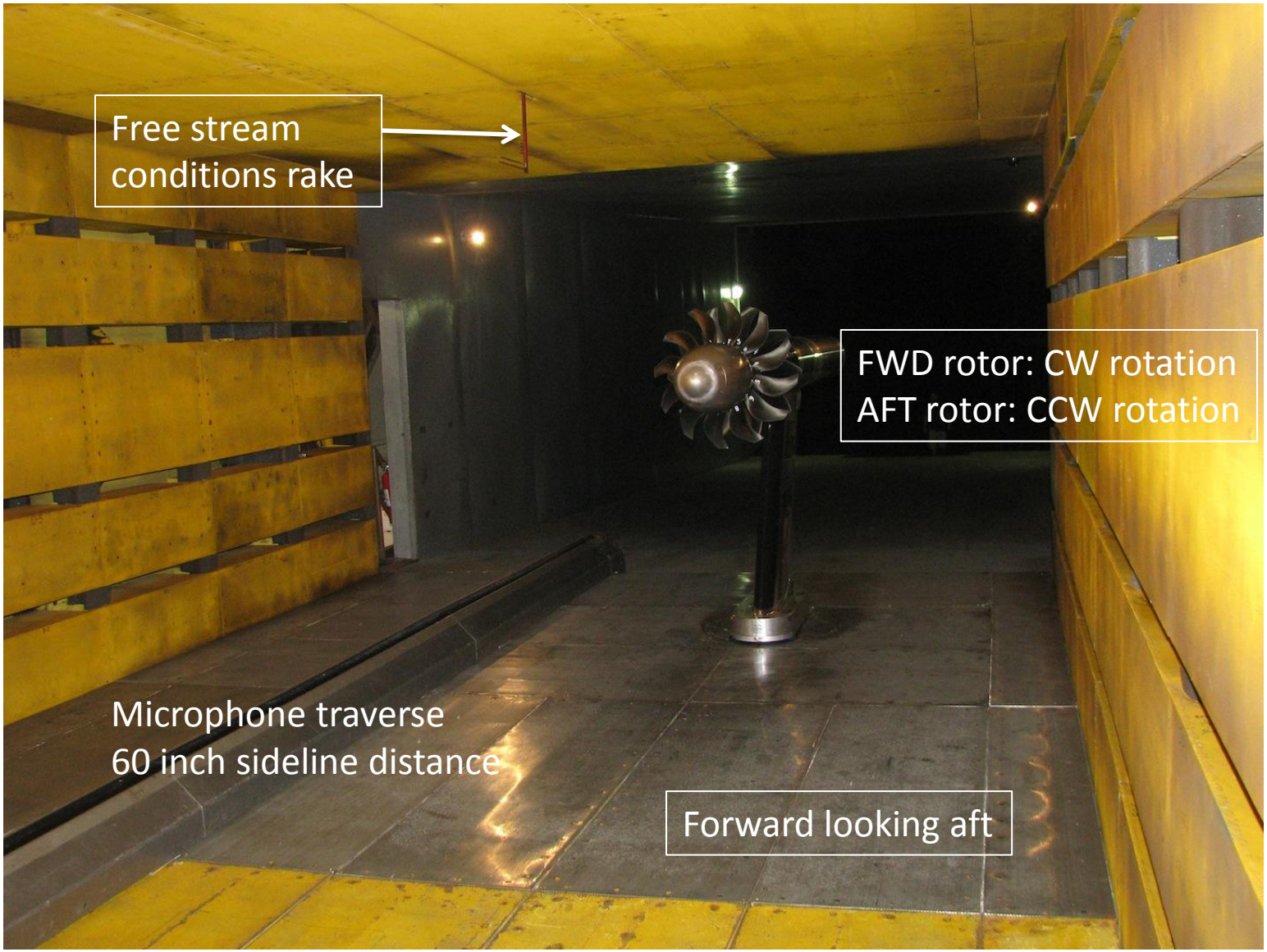

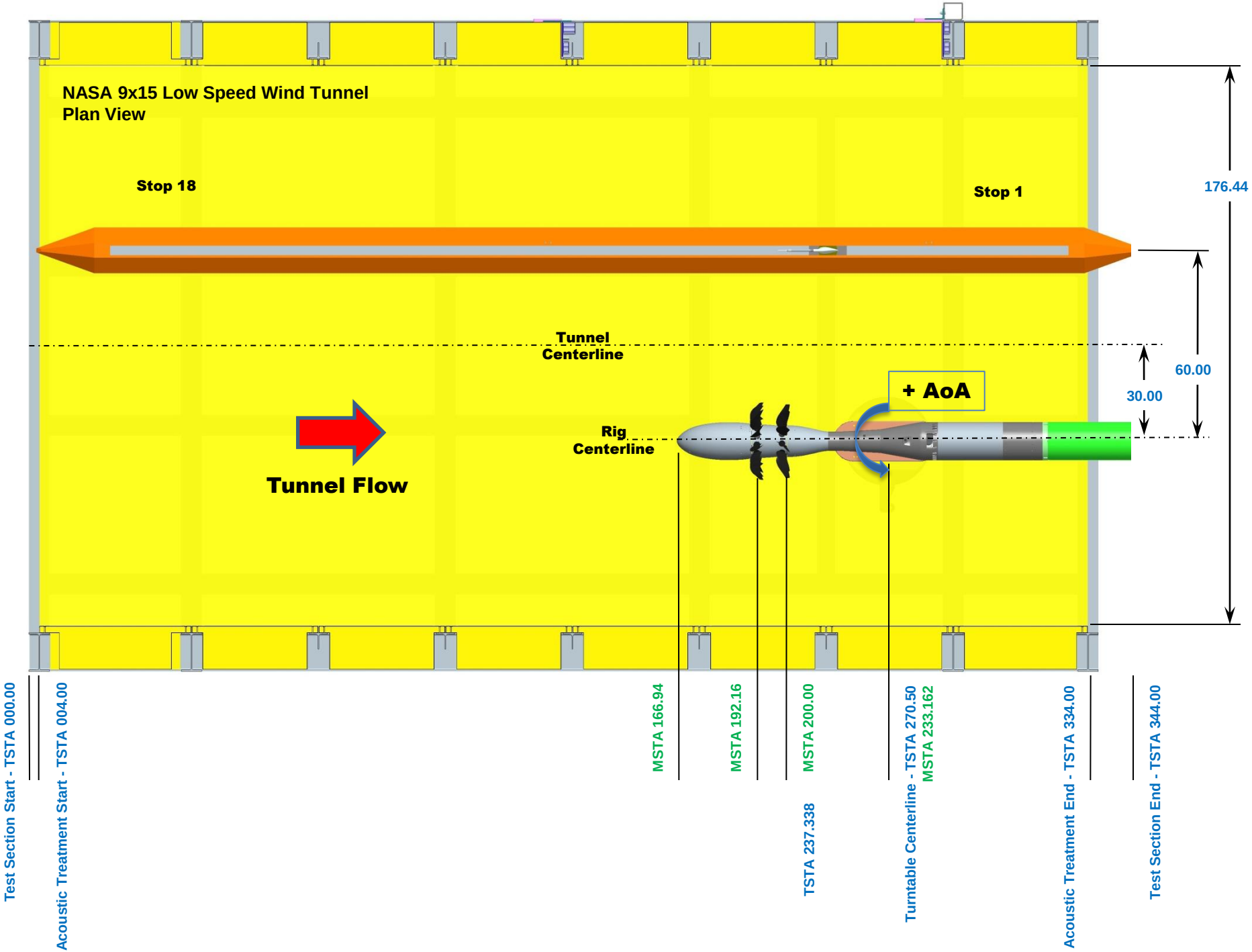
NASA 9x15 Low Speed Wind Tunnel
Plan View
Stop 18
Stop 1
176.44
Tunnel
Centerline
60.00
30.00
+ AoA
Rig
Centerline
Tunnel Flow
Test Section Start - TSTA 000.00
Acoustic Treatment Start - TSTA 004.00
MSTA 166.94
MSTA 192.16
MSTA 200.00
TSTA 237.338
Turntable Centerline - TSTA 270.50
MSTA 233.162
Acoustic Treatment End - TSTA 334.00
Test Section End - TSTA 344.00

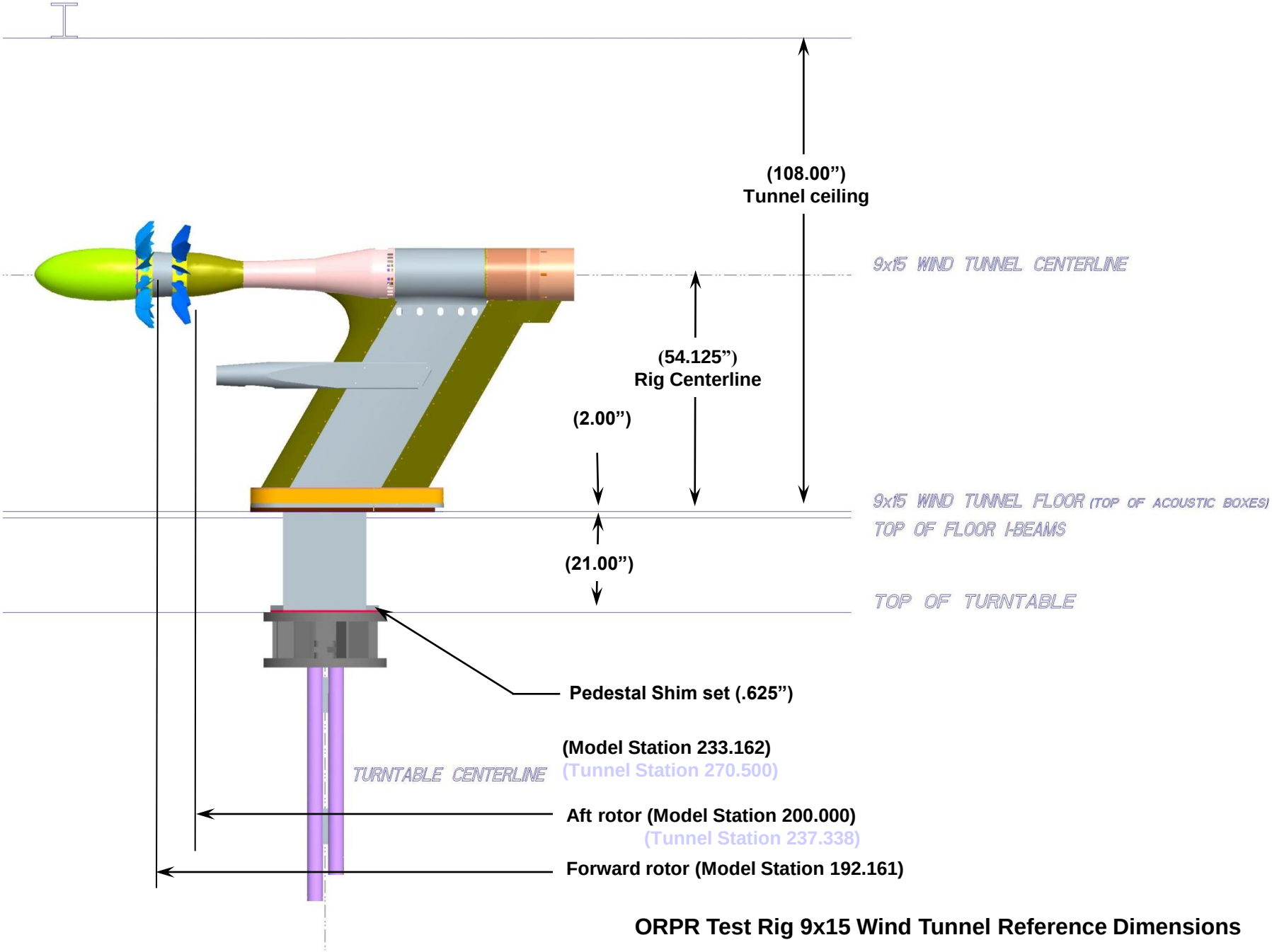

ORPR Test Rig 9x15 Wind Tunnel Reference Dimensions

Geometric Angles for Acoustic Traverse Stops

Stop Number	Angle from Upstream, Relative to Aft Rotor Pitch Change Axis	Axial Distance from Aft Rotor Pitch Change Axis (feet)
1	140.0	-6.0
2	135.0	-5.0
3	127.5	-3.8
4	120.0	-2.9
5	112.5	-2.1
6	105.0	-1.3
7	97.5	-0.7
8	90.0	0.0
9	82.5	0.7
10	75.0	1.3
11	67.5	2.1
12	60.0	2.9
13	52.5	3.8
14	45.0	5.0
15	37.5	6.5
16	30.0	8.7
17	22.5	12.1
18	17.6	15.7

0 degrees is upstream
180 degrees is downstream

Typical Tare/Background Acoustics Model Configuration

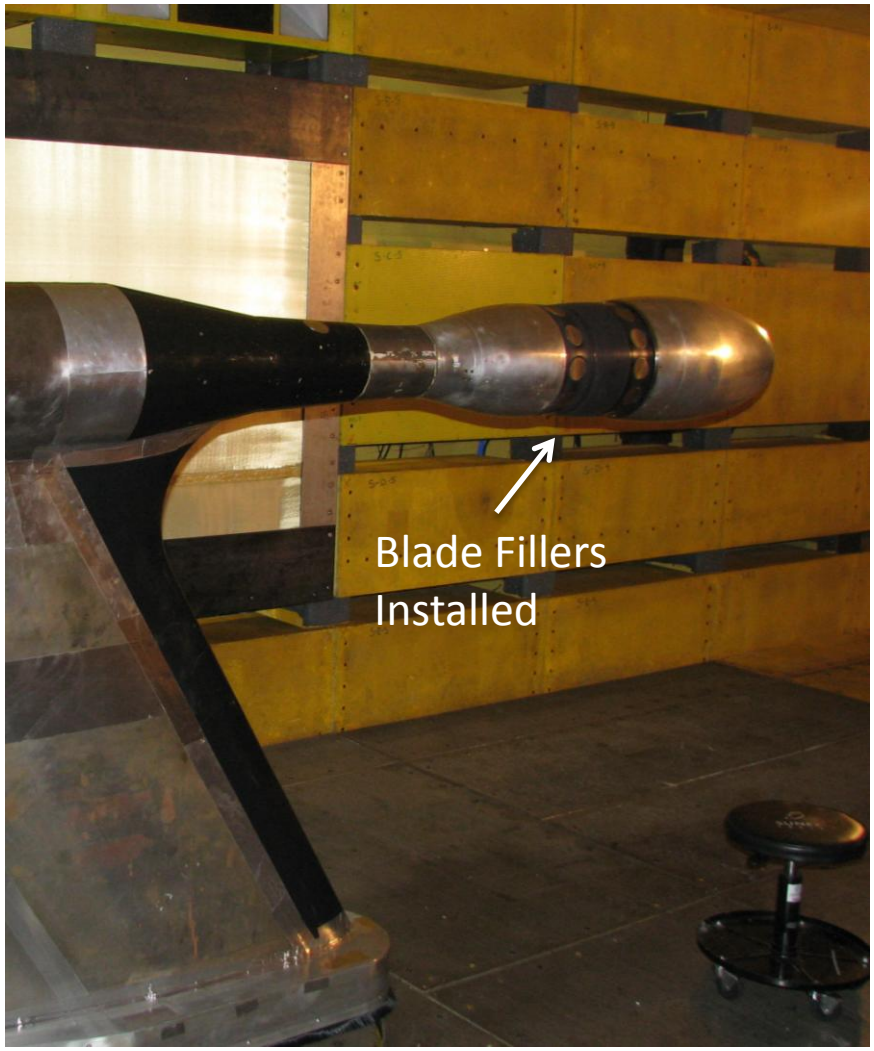

Angles for surface statics are defined as Aft Looking Forward (ALF)

FOREBODY SHELL STATICS - 5 (58021-101-3, -10)			
ANGLE ALF	MODEL STATION	RADIAL STATION	NASA NAME
0°	169.930	3.440	PSFB(5)
90°	169.930	3.440	PSFB(20)
165°	169.930	3.440	PSFB(35)
195°	169.930	3.440	PSFB(50)
270°	169.930	3.440	PSFB(65)

FOREBODY SHELL STATICS - 4 (58021-101-3, -10)			
ANGLE ALF	MODEL STATION	RADIAL STATION	NASA NAME
0°	168.440	2.383	PSFB(4)
90°	168.440	2.383	PSFB(19)
165°	168.440	2.383	PSFB(34)
195°	168.440	2.383	PSFB(49)
270°	168.440	2.383	PSFB(64)

FOREBODY SHELL STATICS - 3 (58021-101-3, -10)			
ANGLE ALF	MODEL STATION	RADIAL STATION	NASA NAME
0°	167.593	1.507	PSFB(3)
90°	167.593	1.507	PSFB(18)
165°	167.593	1.507	PSFB(33)
195°	167.593	1.507	PSFB(48)
270°	167.593	1.507	PSFB(63)

FOREBODY SHELL STATICS - 2 (58021-101-3, -10)			
ANGLE ALF	MODEL STATION	RADIAL STATION	NASA NAME
0°	167.107	0.715	PSFB(2)
90°	167.107	0.715	PSFB(17)
165°	167.107	0.715	PSFB(32)
195°	167.107	0.715	PSFB(47)
270°	167.107	0.715	PSFB(62)

FOREBODY SHELL STATICS - 1 (58021-101-3, -10)			
ANGLE ALF	MODEL STATION	RADIAL STATION	NASA NAME
0°	166.943	0.000	PSFB(1)
0° (90)	166.943	0.000	PSFB(16)
0° (165)	166.943	0.000	PSFB(31)
0° (195)	166.943	0.000	PSFB(46)
0° (270)	166.943	0.000	PSFB(61)

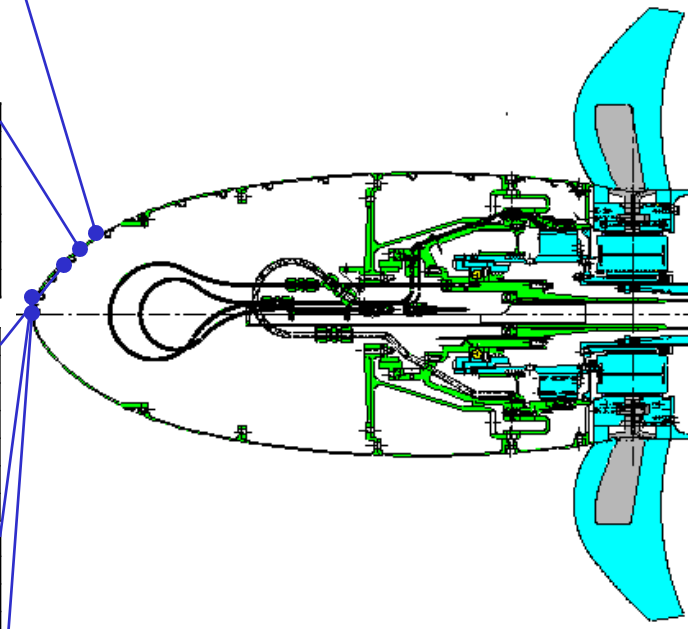

Forebody Static Pressures (1)

Rev. 0

FOREBODY SHELL STATICS - 10 (58021-101-3, -10)			
ANGLE ALF	MODEL STATION	RADIAL STATION	NASA NAME
0°	179.370	5.813	PSFB(10)
90°	179.370	5.813	PSFB(25)
165°	179.370	5.813	PSFB(40)
195°	179.370	5.813	PSFB(55)
270°	179.370	5.813	PSFB(70)

FOREBODY SHELL STATICS - 9 (58021-101-3, -10)			
ANGLE ALF	MODEL STATION	RADIAL STATION	NASA NAME
0°	177.010	5.552	PSFB(9)
90°	177.010	5.552	PSFB(24)
165°	177.010	5.552	PSFB(39)
195°	177.010	5.552	PSFB(54)
270°	177.010	5.552	PSFB(69)

FOREBODY SHELL STATICS - 8 (58021-101-3, -10)			
ANGLE ALF	MODEL STATION	RADIAL STATION	NASA NAME
0°	175.040	5.225	PSFB(8)
90°	175.040	5.225	PSFB(23)
165°	175.040	5.225	PSFB(38)
195°	175.040	5.225	PSFB(53)
270°	175.040	5.225	PSFB(68)

FOREBODY SHELL STATICS - 7 (58021-101-3, -10)			
ANGLE ALF	MODEL STATION	RADIAL STATION	NASA NAME
0°	173.330	4.834	PSFB(7)
90°	173.330	4.834	PSFB(22)
165°	173.330	4.834	PSFB(37)
195°	173.330	4.834	PSFB(52)
270°	173.330	4.834	PSFB(67

FOREBODY SHELL STATICS - 6 (58021-101-3, -10)			
ANGLE ALF	MODEL STATION	RADIAL STATION	NASA NAME
0°	171.580	4.255	PSFB(6)
90°	171.580	4.255	PSFB(21)
165°	171.580	4.255	PSFB(36)
195°	171.580	4.255	PSFB(51)
270°	171.580	4.255	PSFB(66)

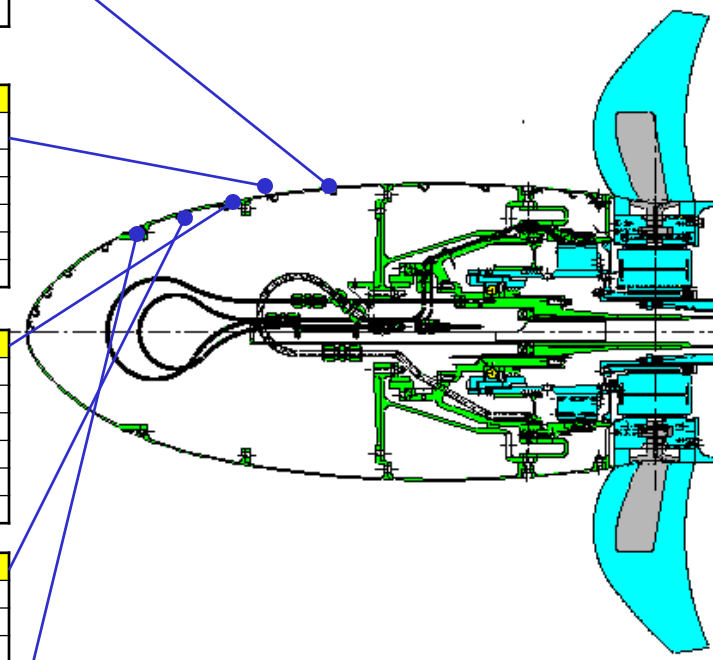

Forebody Static Pressures (2)

Rev. 0

FOREBODY SHELL STATICS - 15 (58021-101-3, -10)			
ANGLE ALF	MODEL STATION	RADIAL STATION	NASA NAME
0°	189.870	5.542	PSFB(15)
90°	189.870	5.542	PSFB(30)
165°	189.870	5.542	PSFB(45)
195°	189.870	5.542	PSFB(60)
270°	189.870	5.542	PSFB(75)

FOREBODY SHELL STATICS - 14 (58021-101-3, -10)			
ANGLE ALF	MODEL STATION	RADIAL STATION	NASA NAME
0°	189.000	5.661	PSFB(14)
90°	189.000	5.661	PSFB(29)
165°	189.000	5.661	PSFB(44)
195°	189.000	5.661	PSFB(59)
270°	189.000	5.661	PSFB(74)

FOREBODY SHELL STATICS - 13 (58021-101-3, -10)			
ANGLE ALF	MODEL STATION	RADIAL STATION	NASA NAME
0°	187.250	5.836	PFSB(13)
90°	187.250	5.836	PSFB(28)
165°	187.250	5.836	PSFB(43)
195°	187.250	5.836	PSFB(58)
270°	187.250	5.836	PSFB(73)

FOREBODY SHELL STATICS - 12 (58021-101-3, -10)			
ANGLE ALF	MODEL STATION	RADIAL STATION	NASA NAME
0°	185.500	5.929	PSFB(12)
90°	185.500	5.929	PSFB(27)
165°	185.500	5.929	PSFB(42)
195°	185.500	5.929	PSFB(57)
270°	185.500	5.929	PSFB(72)

FOREBODY SHELL STATICS - 11 (58021-101-3, -10)			
ANGLE ALF	MODEL STATION	RADIAL STATION	NASA NAME
0°	183.050	5.968	PSFB(11)
90°	183.050	5.968	PSFB(26)
165°	183.050	5.968	PSFB(41)
195°	183.050	5.968	PSFB(56)
270°	183.050	5.968	PSFB(71)

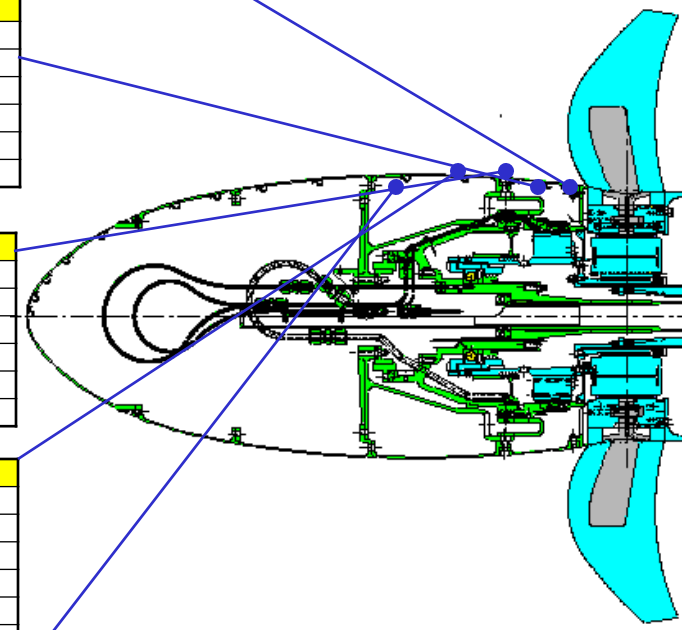

Forebody Static Pressures (3)

Rev. 0

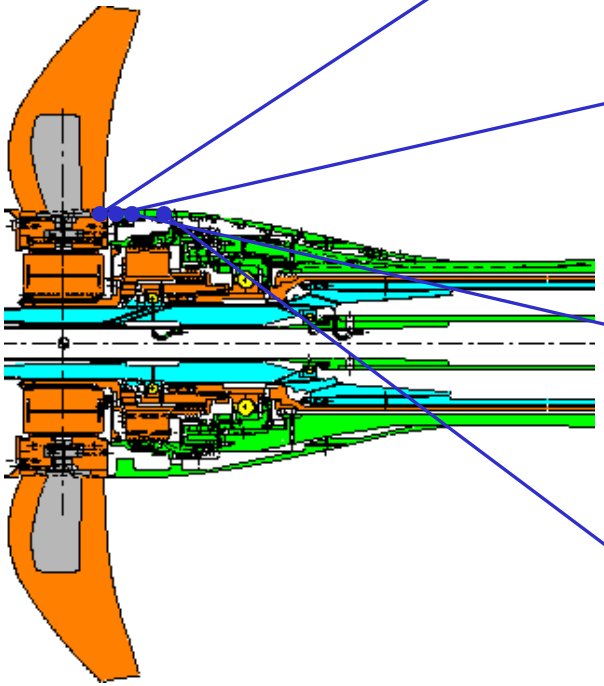

AFTERBODY SHELL STATICS - 1 (5802D-618-2, -3)			
ANGLE ALF	MODEL STATION	RADIAL STATION	NASA NAME
0°	202.300	4.981	PSAB(1)
90°	202.300	4.981	PSAB(13)
180°	202.300	4.981	PSAB(25)
270°	202.300	4.981	PSAB(37)

AFTERBODY SHELL STATICS - 2 (5802D-618-2, -3)			
ANGLE ALF	MODEL STATION	RADIAL STATION	NASA NAME
0°	203.000	4.969	PSAB(2)
90°	203.000	4.969	PSAB(14)
180°	203.000	4.969	PSAB(26)
270°	203.000	4.969	PSAB(38)

AFTERBODY SHELL STATICS - 3 (5802D-618-2, -3)			
ANGLE ALF	MODEL STATION	RADIAL STATION	NASA NAME
0°	203.700	4.935	PSAB(3)
90°	203.700	4.935	PSAB(15)
180°	203.700	4.935	PSAB(27)
270°	203.700	4.935	PSAB(39)

AFTERBODY SHELL STATICS - 4 (5802D-618-2, -3)			
ANGLE ALF	MODEL STATION	RADIAL STATION	NASA NAME
0°	204.710	4.852	PSAB(4)
90°	204.710	4.852	PSAB(16)
180°	204.710	4.852	PSAB(28)
270°	204.710	4.852	PSAB(40)

Afterbody Shell Pressure Statics (1)

Rev. 0

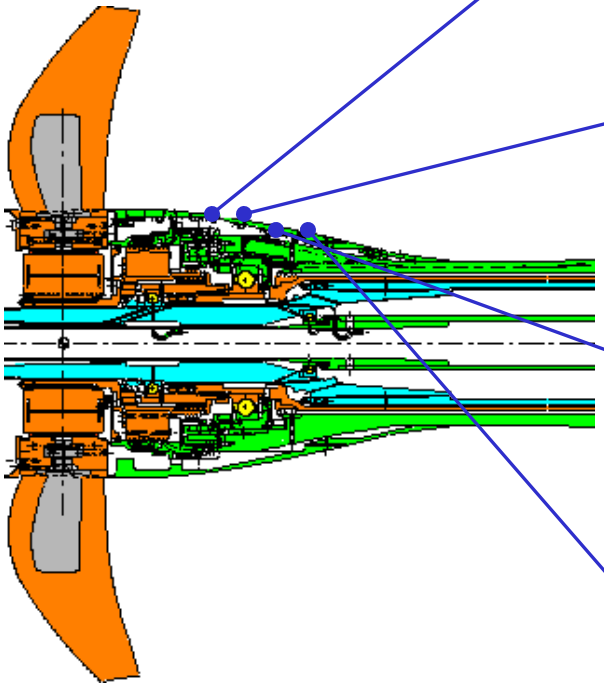

AFTERBODY SHELL STATICS - 5 (5802D-618-2, -3)			
ANGLE ALF	MODEL STATION	RADIAL STATION	ESCORT NAME
0°	205.720	4.725	PSAB(5)
90°	205.720	4.725	PSAB(17)
180°	205.720	4.725	PSAB(29)
270°	205.720	4.725	PSAB(41)

AFTERBODY SHELL STATICS - 6 (5802D-618-2, -3)			
ANGLE ALF	MODEL STATION	RADIAL STATION	ESCORT NAME
0°	206.720	4.571	PSAB(6)
90°	206.720	4.571	PSAB(18)
180°	206.720	4.571	PSAB(30)
270°	206.720	4.571	PSAB(42)

AFTERBODY SHELL STATICS - 7 (5802D-618-2, -3)			
ANGLE ALF	MODEL STATION	RADIAL STATION	ESCORT NAME
0°	207.730	4.367	PSAB(7)
90°	207.730	4.367	PSAB(19)
180°	207.730	4.367	PSAB(31)
270°	207.730	4.367	PSAB(43)

AFTERBODY SHELL STATICS - 8 (5802D-618-2, -3)			
ANGLE ALF	MODEL STATION	RADIAL STATION	ESCORT NAME
0°	208.740	4.154	PSAB(8)
90°	208.740	4.154	PSAB(20)
180°	208.740	4.154	PSAB(32)
270°	208.740	4.154	PSAB(44)

Afterbody Shell Pressure Statics (2)

Rev. 0

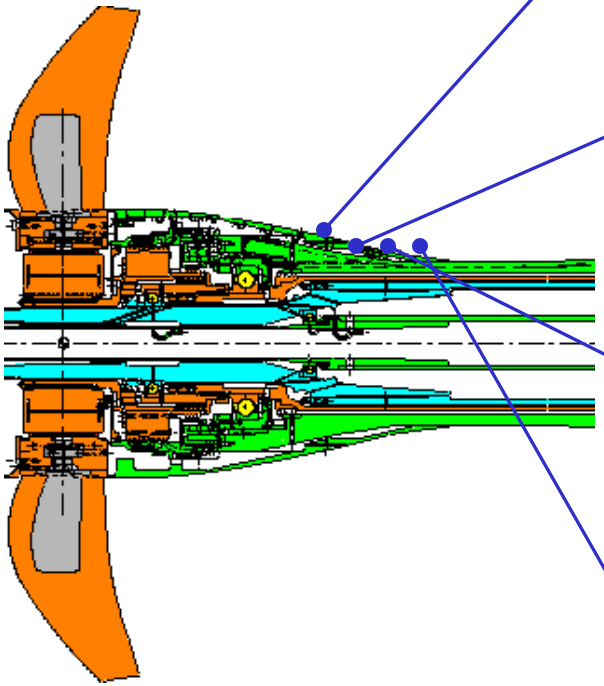

AFTERBODY SHELL STATICS - 9 (5802D-618-2, -3)			
ANGLE ALF	MODEL STATION	RADIAL STATION	ESCORT NAME
0°	209.990	3.877	PSAB(9)
90°	209.990	3.877	PSAB(21)
180°	209.990	3.877	PSAB(33)
270°	209.990	3.877	PSAB(45)

AFTERBODY SHELL STATICS - 10 (5802D-618-5, -6)			
ANGLE ALF	MODEL STATION	RADIAL STATION	ESCORT NAME
0°	211.500	3.521	PSAB(10)
90°	211.500	3.521	PSAB(22)
180°	211.500	3.521	PSAB(34)
270°	211.500	3.521	PSAB(46)

AFTERBODY SHELL STATICS - 11 (5802D-618-5, -6)			
ANGLE ALF	MODEL STATION	RADIAL STATION	ESCORT NAME
0°	213.000	3.210	PSAB(11)
90°	213.000	3.210	PSAB(23)
180°	213.000	3.210	PSAB(35)
270°	213.000	3.210	PSAB(47)

AFTERBODY SHELL STATICS - 12 (5802-201-1)			
ANGLE ALF	MODEL STATION	RADIAL STATION	ESCORT NAME
0°	216.500	3.000	PSAB(12)
90°	216.500	3.000	PSAB(24)
180°	216.500	3.000	PSAB(36)
270°	216.500	3.000	PSAB(48)

Afterbody Shell Pressure Statics (3)

Rev. 0

C-2010-3604

Pylon Installation (side view, pressure side)

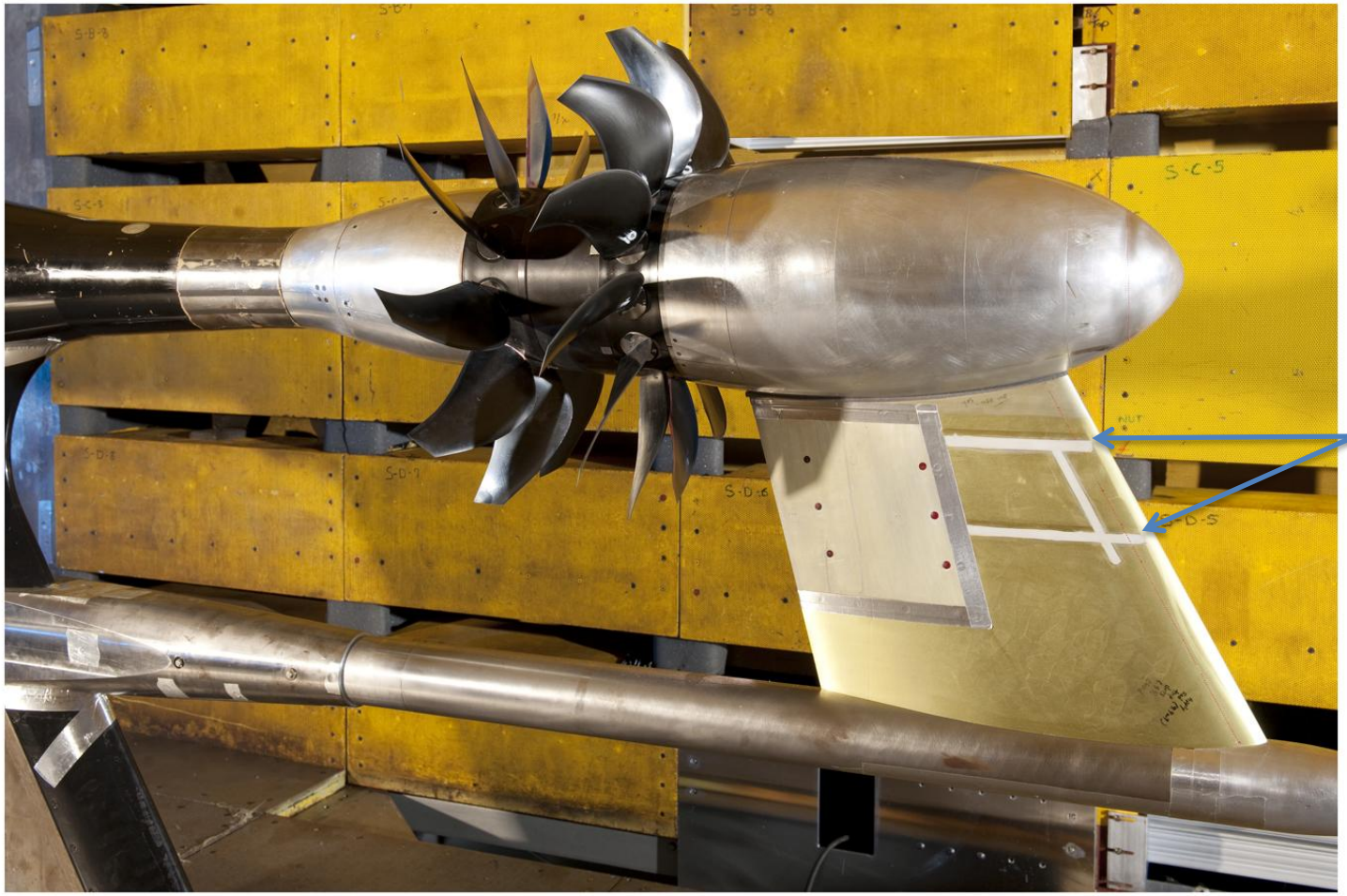

Data file variables (D074)

ESCORT Word Number	ESCORT Channel Name	Description
	ICRDG	Reading number
	DATE	
	TIME	
	BETAF	Forward Rotor Pitch Angle (degrees)
	BETAA	Aft Rotor Pitch Angle (degrees)
65	ALPHA	Angle of Attack (+ Right FLA), degrees
56	TTTR(1)	Tunnel Test Rig Total Temperature, deg. F
57	TTTR(2)	Tunnel Test Rig Total Temperature, deg. F
58	TTTR(3)	Tunnel Test Rig Total Temperature, deg. F
621	PTTR(1)	Tunnel Test Rig Total Pressure, psia
622	PTTR(2)	Tunnel Test Rig Total Pressure, psia
623	PTTR(3)	Tunnel Test Rig Total Pressure, psia
624	PTTR(4)	Tunnel Test Rig Total Pressure, psia
2470	PTO	Freestream (Test Section) Total Pressure, psia
2471	PSO	Freestream (Test Section) Static Pressure, psia
2472	TTO	Freestream (Test Section) Total Temperature, deg. R
2480	TSO	Freestream (Test Section) Static Temperature = tto / (1.+ mo**2 / 5.)
2477	MO	Test Section Mach Number
2483	VO	Freestream (Test Section) Velocity = 49.021 * mo * (tso)**0.5, ft/s
2497	PCTHUM	Relative humidity, %
2500	DELTA	Correction using Tunnel Freestream Static Press = pso / 14.696
2501	THETA	Correction Value using Tunnel Freestream Static Temp = tso/518.67
1489	RPMF	Physical RPM - FWD
2638	RPMFC	Corrected RPM - FWD = rpmf / (theta)**0.5
1491	RPMA	Physical RPM - AFT
2654	RPMAC	Corrected RPM - AFT = rpma / (theta)**0.5
2711	TAPF	Apparent Thrust - FWD Rotor, lbf
2722	TAPA	Apparent Thrust - AFT Rotor, lbf
2727	TAPT	Total Apparent Thrust, lbf
2575	TQF	Balance TQ - FWD Rotor, ft-lb
2612	TQA	Balance TQ - AFT Rotor, ft-lb
2669	SHPT	Total Shaft Horsepower, hp
2808	ETAAPT	Total Apparent Efficiency = vo * tapt / (shpt * 550)

Data file variables (D074)

ESCORT Word Number	ESCORT Channel Name	Description	Model Station	Below rig C/L
1139	ppyp01	Pylon Static Pressure #1- Port Side (Fwd. Looking Aft)	2.5% chord	7.438 inches
1140	ppyp02	Pylon Static Pressure #2- Port Side (Fwd. Looking Aft)	5.0	
1141	ppyp03	Pylon Static Pressure #3- Port Side (Fwd. Looking Aft)	15.0	
1142	ppyp04	Pylon Static Pressure #4- Port Side (Fwd. Looking Aft)	25.0	
1143	ppyp05	Pylon Static Pressure #5- Port Side (Fwd. Looking Aft)	42.5	
1144	ppyp06	Pylon Static Pressure #6- Port Side (Fwd. Looking Aft)	65.0	
1145	ppyp07	Pylon Static Pressure #7- Port Side (Fwd. Looking Aft)	95.0	
1170	ppyp08	Pylon Static Pressure #8- Port Side (Fwd. Looking Aft)	2.5% chord	11.725 inches
1171	ppyp09	Pylon Static Pressure #9- Port Side (Fwd. Looking Aft)	5.0	
1172	ppyp10	Pylon Static Pressure #10- Port Side (Fwd. Looking Aft)	15.0	
1173	ppyp11	Pylon Static Pressure #11- Port Side (Fwd. Looking Aft)	25.0	
1174	ppyp12	Pylon Static Pressure #12- Port Side (Fwd. Looking Aft)	45.0	
1175	ppyp13	Pylon Static Pressure #13- Port Side (Fwd. Looking Aft)	65.0	
1176	ppyp14	Pylon Static Pressure #14- Port Side (Fwd. Looking Aft)	95.0	
1146	ppys01	Pylon Static Pressure #1- Starboard Side (Fwd. Looking Aft)	2.5% chord	7.438 inches
1147	ppys02	Pylon Static Pressure #2- Starboard Side (Fwd. Looking Aft)	5.0	
1148	ppys03	Pylon Static Pressure #3- Starboard Side (Fwd. Looking Aft)	10.0	
1149	ppys04	Pylon Static Pressure #4- Starboard Side (Fwd. Looking Aft)	15.0	
1150	ppys05	Pylon Static Pressure #5- Starboard Side (Fwd. Looking Aft)	20.0	
1151	ppys06	Pylon Static Pressure #6- Starboard Side (Fwd. Looking Aft)	25.0	
1152	ppys07	Pylon Static Pressure #7- Starboard Side (Fwd. Looking Aft)	35.0	
1153	ppys08	Pylon Static Pressure #8- Starboard Side (Fwd. Looking Aft)	42.5	
1154	ppys09	Pylon Static Pressure #9- Starboard Side (Fwd. Looking Aft)	55.0	
1155	ppys10	Pylon Static Pressure #10- Starboard Side (Fwd. Looking Aft)	65.0	
1156	ppys11	Pylon Static Pressure #11- Starboard Side (Fwd. Looking Aft)	75.0	
1157	ppys12	Pylon Static Pressure #12- Starboard Side (Fwd. Looking Aft)	85.0	
1158	ppys13	Pylon Static Pressure #13- Starboard Side (Fwd. Looking Aft)	95.0	
1177	ppys14	Pylon Static Pressure #14- Starboard Side (Fwd. Looking Aft)	2.5% chord	11.725 inches
1178	ppys15	Pylon Static Pressure #15- Starboard Side (Fwd. Looking Aft)	5.0	
1179	ppys16	Pylon Static Pressure #16- Starboard Side (Fwd. Looking Aft)	10.0	
1180	ppys17	Pylon Static Pressure #17- Starboard Side (Fwd. Looking Aft)	15.0	
1181	ppys18	Pylon Static Pressure #18- Starboard Side (Fwd. Looking Aft)	20.0	
1182	ppys19	Pylon Static Pressure #19- Starboard Side (Fwd. Looking Aft)	25.0	
1183	ppys20	Pylon Static Pressure #20- Starboard Side (Fwd. Looking Aft)	35.0	
1184	ppys21	Pylon Static Pressure #21- Starboard Side (Fwd. Looking Aft)	42.5	
1185	ppys22	Pylon Static Pressure #22- Starboard Side (Fwd. Looking Aft)	55.0	
1186	ppys23	Pylon Static Pressure #23- Starboard Side (Fwd. Looking Aft)	65.0	
1187	ppys24	Pylon Static Pressure #24- Starboard Side (Fwd. Looking Aft)	75.0	
1188	ppys25	Pylon Static Pressure #25- Starboard Side (Fwd. Looking Aft)	85.0	
1189	ppys26	Pylon Static Pressure #26- Starboard Side (Fwd. Looking Aft)	95.0	

Data RDGS

RDG		Config
Aero	Acoustic	
351	352	Pylon
354	355	Pylon
356	357	Pylon
358	359	Pylon
360	361	Pylon
364	365	Pylon
366	367	Pylon
368	369	Pylon
372	373	Pylon
374	375	Pylon
381	382	Pylon
383	384	Pylon
385	386	Pylon
387	388	Pylon
389	390	Pylon
393	394	Pylon
395	396	Pylon
397	398	Pylon
401	402	Pylon
403	404	Pylon
405	406	Pylon
409	410	Pylon
411	412	Pylon
413	414	Pylon

RDG		Config
Aero	Acoustic	
421	422	Isolated
423	424	Isolated
425	426	Isolated
427	428	Isolated
429	430	Isolated
433	434	Isolated
435	436	Isolated
437	438	Isolated
441	442	Isolated
443	444	Isolated
445	446	Isolated
449	450	Isolated
451	452	Isolated
453	454	Isolated
461	462	Isolated
463	464	Isolated
465	466	Isolated
467	468	Isolated
469	470	Isolated
471	472	Isolated
475	476	Isolated
477	478	Isolated
479	480	Isolated
483	484	Isolated
485	486	Isolated
487	488	Isolated
491	492	Isolated
493	494	Isolated
495	496	Isolated
801	802	Tare
809	810	Tare
813	814	Tare
817	818	Tare

RDG		Config
Aero	Acoustic	
503	504	Long Wall FWD
505	506	Long Wall FWD
509	510	Long Wall FWD
511	512	Long Wall FWD
520	521	Long Wall AFT
522	523	Long Wall AFT
526	527	Long Wall AFT
528	529	Long Wall AFT
1053	1054	Short Wall FWD
1055	1056	Short Wall FWD
1057	1058	Short Wall FWD
1060	1061	Short Wall FWD
1062	1063	Short Wall FWD
1064	1065	Short Wall FWD
1070	1071	Short Wall AFT
1072	1073	Short Wall AFT
1074	1075	Short Wall AFT
1077	1078	Short Wall AFT
1079	1080	Short Wall AFT
1081	1082	Short Wall AFT

NASA Standard Acoustic Data Processing

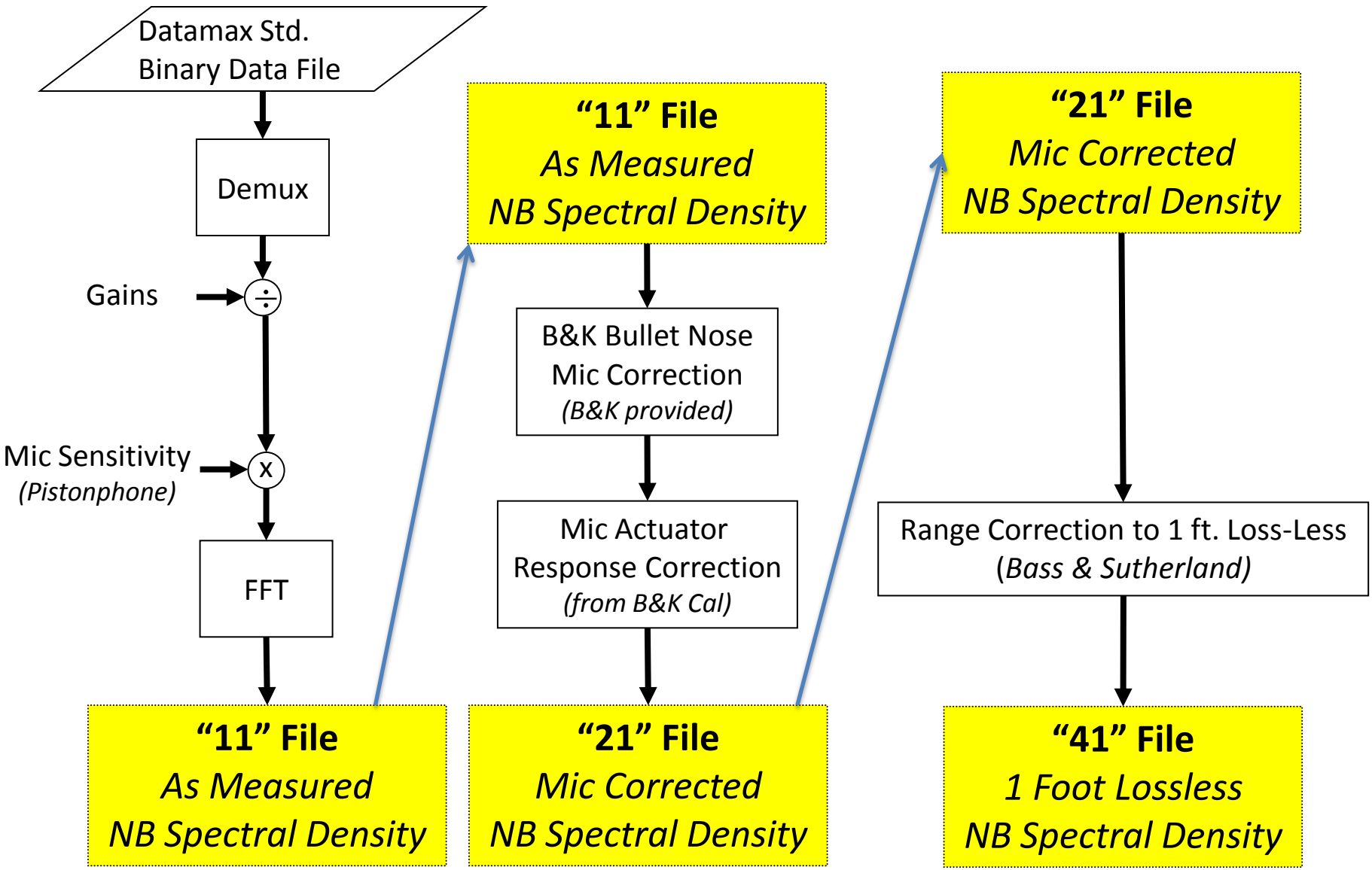

High Speed Wind Tunnel Test

8x6 SWT

C-2011-619

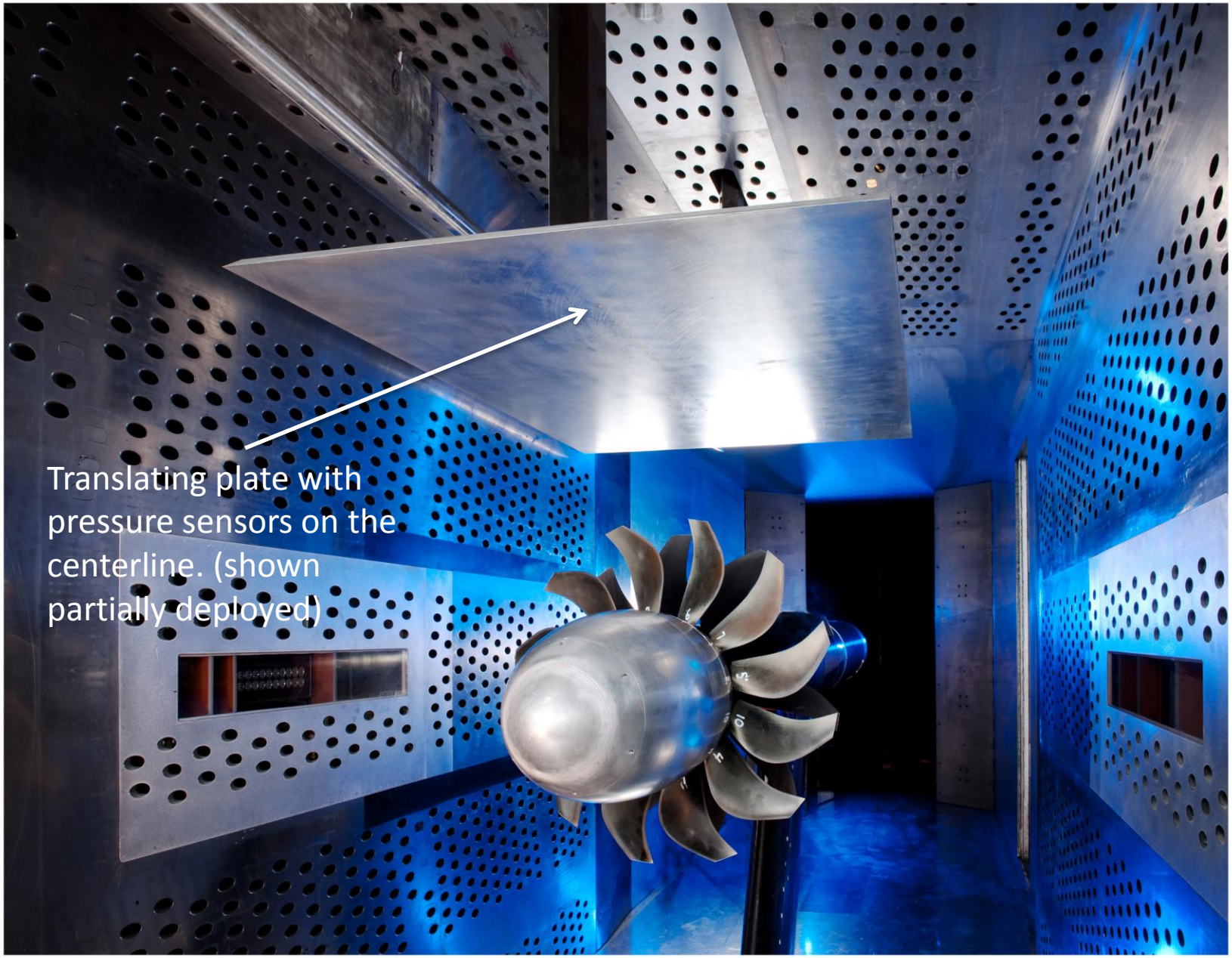

National Aeronautics and Space Administration
Glenn Research Center at Lewis Field

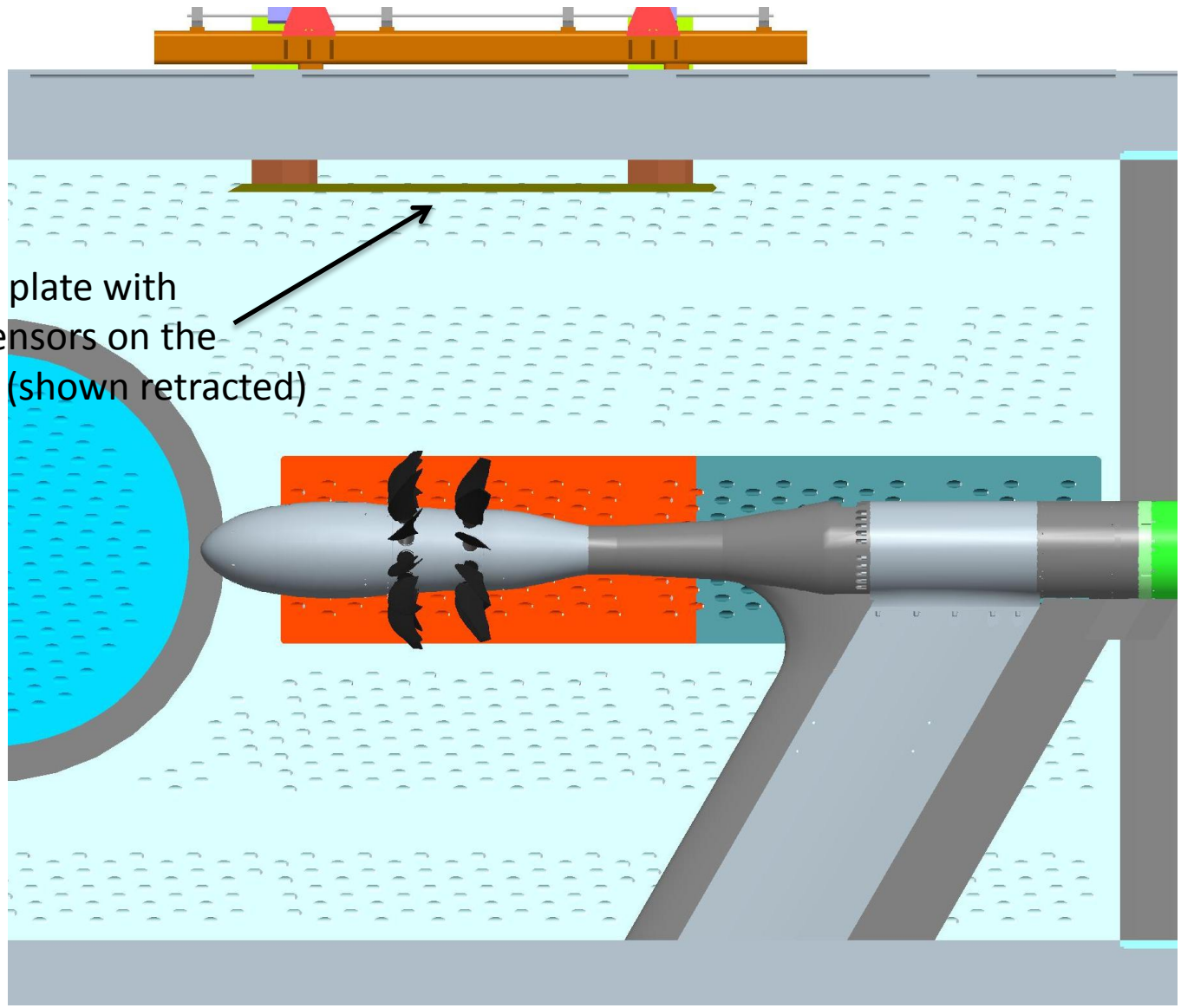
Translating plate with
pressure sensors on the
centerline. (shown retracted)

Processing for 8x6 ORPR Kulite Data

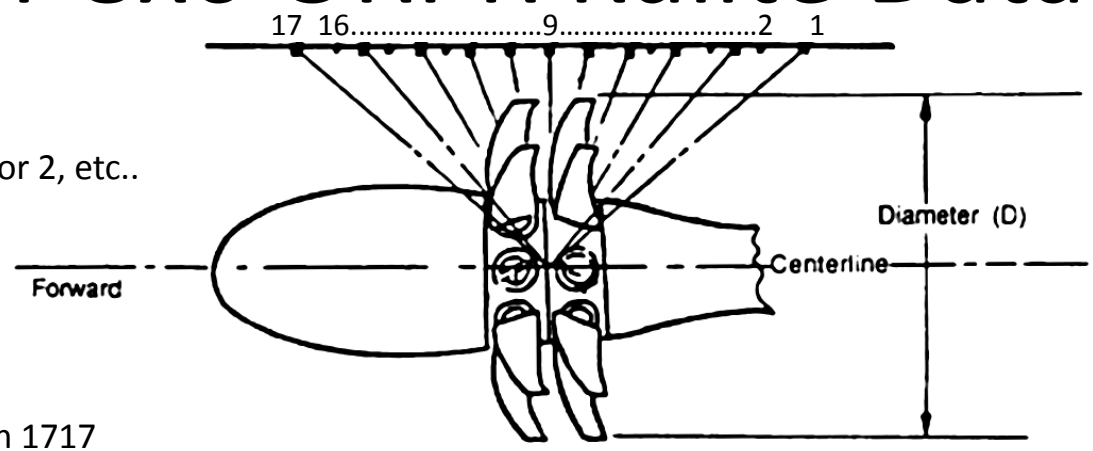

PSD – Auto-Pressure Spectral Density

- Files for each RDG
- Columns are: Frequency, Sensor 1, Sensor 2, etc..
- Decibels ref 20e-6 Pa

CPSD – Cross Pressure Spectral Density

- Folders for each RDG
- CPSD is in pairs of sensors, 0101 through 1717
- Decibels ref 20e-6 Pa
- Only "upper-triangular" portion of CPSD matrix is included
  - For example, 0102 is included, but 0201 is excluded
  - CPSD 0201 can be calculated as the complex conjugate of CPSD 0102
- Magnitude Squared Coherence can be calculated as

$$C_{xy}(f) = \frac{|P_{xy}(f)|^2}{P_{xx}(f)P_{yy}(f)}$$

Kulite Number	Inches from Rotor Center	Centimeters from Rotor Center
1	-18.4	-46.7
2	-15.3	-38.9
3	-13.4	-34.0
4	-11.6	-29.5
5	-9.2	-23.4
6	-7.4	-18.8
7	-5.8	-14.7
8	-2.8	-7.1
9	0	0.0
10	2.8	7.1
11	5.8	14.7
12	7.4	18.8
13	9.2	23.4
14	11.6	29.5
15	13.4	34.0
16	15.3	38.9
17	18.4	46.7

Data File Variables (D106)

ESCORT Word Number	ESCORT Channel Name	Description
	ICRDG	Reading number
	DATE	
	TIME	
115	HPLATE	Hight of Kulite plate above model (and tunnel) centerline
	BETAF	Forward Rotor Pitch Angle (degrees)
	BETAA	Aft Rotor Pitch Angle (degrees)
95	STANG	(Supersonic) Strut Angle (Equiv. to Angle of Attack, AOA - in degrees)
59	TTBM(2)	Tunnel Total Temp. 2 DEDICATED
61	TTBM(4)	Tunnel Total Temp. 4 DEDICATED
309	PTBM(1)	Tunnel Bellmouth Rake - North Rake DEDICATED
310	PTBM(2)	Tunnel Bellmouth Rake - North Rake DEDICATED
311	PTBM(3)	Tunnel Bellmouth Rake - North Rake DEDICATED
312	PTBM(4)	Tunnel Bellmouth Rake - North Rake DEDICATED
313	PTBM(5)	Tunnel Bellmouth Rake - South Rake DEDICATED
314	PTBM(6)	Tunnel Bellmouth Rake - South Rake DEDICATED
315	PTBM(7)	Tunnel Bellmouth Rake - South Rake DEDICATED
316	PTBM(8)	Tunnel Bellmouth Rake - South Rake DEDICATED

Data File Variables (D106)

ESCORT Word Number	ESCORT Channel Name	Description
2345	PTO	Test Section Total Pressure Including Blockage Effects, psia
2348	PSO	Freestream (Test Section) Static Pressure, psia
2349	TTO	Freestream (Test Section) Total Temperature, deg. R
2352	TSO	Freestream (Test Section) Static Temperature = tto / (1.+ mo**2 / 5.)
2347	MO	Test Section Mach Number Including Blockage Effects
2353	VO	Freestream (Test Section) Velocity = 49.021 * mo * (tso)**0.5, ft/s
2363	PCTHUM	Relative humidity, %
2366	DELTA	Correction using Tunnel Freestream Static Press = pso / 14.696
2367	THETA	Correction Value using Tunnel Freestream Static Temp = tso/518.67
1033	RPMF	Physical RPM - FWD
2499	RPMFC	Corrected RPM - FWD = rpmf / (theta)**0.5
1035	RPMA	Physical RPM - AFT
2515	RPMAC	Corrected RPM - AFT = rpma / (theta)**0.5
2572	TAPF	Apparent Thrust - FWD Rotor, lbf
2583	TAPA	Apparent Thrust - AFT Rotor, lbf
2588	TAPT	Total Apparent Thrust, lbf
2436	TQF	Balance TQ - FWD Rotor, ft-lb
2473	TQA	Balance TQ - AFT Rotor, ft-lb
2530	SHPT	Total Shaft Horsepower, hp
2669	ETAAPT	Total Apparent Efficiency = vo * tapt / (shpt * 550)

Data File Variables (D106)

ESCORT Word Number	ESCORT Channel Name	Description	Angle, deg.	Model Station, inches	Radius, inches
836	PSFB(1)	Nacelle Forebody Static Pressure, psia	0	166.943	0
837	PSFB(2)	Nacelle Forebody Static Pressure, psia	0	167.107	0.715
838	PSFB(3)	Nacelle Forebody Static Pressure, psia	0	167.593	1.507
839	PSFB(4)	Nacelle Forebody Static Pressure, psia	0	168.44	2.383
840	PSFB(5)	Nacelle Forebody Static Pressure, psia	0	169.93	3.44
841	PSFB(6)	Nacelle Forebody Static Pressure, psia	0	171.58	4.225
842	PSFB(7)	Nacelle Forebody Static Pressure, psia	0	173.33	4.834
843	PSFB(8)	Nacelle Forebody Static Pressure, psia	0	175.04	5.225
844	PSFB(9)	Nacelle Forebody Static Pressure, psia	0	177.01	5.552
845	PSFB(10)	Nacelle Forebody Static Pressure, psia	0	179.37	5.813
846	PSFB(11)	Nacelle Forebody Static Pressure, psia	0	183.05	5.968
847	PSFB(12)	Nacelle Forebody Static Pressure, psia	0	185.5	5.929
848	PSFB(13)	Nacelle Forebody Static Pressure, psia	0	187.25	5.836
849	PSFB(14)	Nacelle Forebody Static Pressure, psia	0	189	5.661
850	PSFB(15)	Nacelle Forebody Static Pressure, psia	0	189.87	5.542

Data File Variables (D106)

ESCORT Word Number	ESCORT Channel Name	Description	Angle, deg.	Model Station, inches	Radius, inches
851	PSFB(16)	Nacelle Forebody Static Pressure, psia	90	166.943	0
852	PSFB(17)	Nacelle Forebody Static Pressure, psia	90	167.107	0.715
853	PSFB(18)	Nacelle Forebody Static Pressure, psia	90	167.593	1.507
854	PSFB(19)	Nacelle Forebody Static Pressure, psia	90	168.44	2.383
855	PSFB(20)	Nacelle Forebody Static Pressure, psia	90	169.93	3.44
856	PSFB(21)	Nacelle Forebody Static Pressure, psia	90	171.58	4.225
857	PSFB(22)	Nacelle Forebody Static Pressure, psia	90	173.33	4.834
858	PSFB(23)	Nacelle Forebody Static Pressure, psia	90	175.04	5.225
859	PSFB(24)	Nacelle Forebody Static Pressure, psia	90	177.01	5.552
860	PSFB(25)	Nacelle Forebody Static Pressure, psia	90	179.37	5.813
861	PSFB(26)	Nacelle Forebody Static Pressure, psia	90	183.05	5.968
862	PSFB(27)	Nacelle Forebody Static Pressure, psia	90	185.5	5.929
863	PSFB(28)	Nacelle Forebody Static Pressure, psia	90	187.25	5.836
864	PSFB(29)	Nacelle Forebody Static Pressure, psia	90	189	5.661
865	PSFB(30)	Nacelle Forebody Static Pressure, psia	90	189.87	5.542
866	PSFB(31)	Nacelle Forebody Static Pressure, psia	165	166.943	0
867	PSFB(32)	Nacelle Forebody Static Pressure, psia	165	167.107	0.715
868	PSFB(33)	Nacelle Forebody Static Pressure, psia	165	167.593	1.507
869	PSFB(34)	Nacelle Forebody Static Pressure, psia	165	168.44	2.383
870	PSFB(35)	Nacelle Forebody Static Pressure, psia	165	169.93	3.44

Data File Variables (D106)

ESCORT Word Number	ESCORT Channel Name	Description	Angle, deg.	Model Station, inches	Radius, inches
871	PSFB(36)	Nacelle Forebody Static Pressure, psia	165	171.58	4.225
872	PSFB(37)	Nacelle Forebody Static Pressure, psia	165	173.33	4.834
873	PSFB(38)	Nacelle Forebody Static Pressure, psia	165	175.04	5.225
874	PSFB(39)	Nacelle Forebody Static Pressure, psia	165	177.01	5.552
875	PSFB(40)	Nacelle Forebody Static Pressure, psia	165	179.37	5.813
876	PSFB(41)	Nacelle Forebody Static Pressure, psia	165	183.05	5.968
877	PSFB(42)	Nacelle Forebody Static Pressure, psia	165	185.5	5.929
878	PSFB(43)	Nacelle Forebody Static Pressure, psia	165	187.25	5.836
879	PSFB(44)	Nacelle Forebody Static Pressure, psia	165	189	5.661
880	PSFB(45)	Nacelle Forebody Static Pressure, psia	165	189.87	5.542
881	PSFB(46)	Nacelle Forebody Static Pressure, psia	195	166.943	0
882	PSFB(47)	Nacelle Forebody Static Pressure, psia	195	167.107	0.715
883	PSFB(48)	Nacelle Forebody Static Pressure, psia	195	167.593	1.507
884	PSFB(49)	Nacelle Forebody Static Pressure, psia	195	168.44	2.383
885	PSFB(50)	Nacelle Forebody Static Pressure, psia	195	169.93	3.44
886	PSFB(51)	Nacelle Forebody Static Pressure, psia	195	171.58	4.225
887	PSFB(52)	Nacelle Forebody Static Pressure, psia	195	173.33	4.834
888	PSFB(53)	Nacelle Forebody Static Pressure, psia	195	175.04	5.225
889	PSFB(54)	Nacelle Forebody Static Pressure, psia	195	177.01	5.552
890	PSFB(55)	Nacelle Forebody Static Pressure, psia	195	179.37	5.813
891	PSFB(56)	Nacelle Forebody Static Pressure, psia	195	183.05	5.968

Data File Variables (D106)

ESCORT Word Number	ESCORT Channel Name	Description	Angle, deg.	Model Station, inches	Radius, inches
892	PSFB(57)	Nacelle Forebody Static Pressure, psia	195	185.5	5.929
893	PSFB(58)	Nacelle Forebody Static Pressure, psia	195	187.25	5.836
894	PSFB(59)	Nacelle Forebody Static Pressure, psia	195	189	5.661
895	PSFB(60)	Nacelle Forebody Static Pressure, psia	195	189.87	5.542
896	PSFB(61)	Nacelle Forebody Static Pressure, psia	270	166.943	0
897	PSFB(62)	Nacelle Forebody Static Pressure, psia	270	167.107	0.715
898	PSFB(63)	Nacelle Forebody Static Pressure, psia	270	167.593	1.507
899	PSFB(64)	Nacelle Forebody Static Pressure, psia	270	168.44	2.383
900	PSFB(65)	Nacelle Forebody Static Pressure, psia	270	169.93	3.44
901	PSFB(66)	Nacelle Forebody Static Pressure, psia	270	171.58	4.225
902	PSFB(67)	Nacelle Forebody Static Pressure, psia	270	173.33	4.834
903	PSFB(68)	Nacelle Forebody Static Pressure, psia	270	175.04	5.225
904	PSFB(69)	Nacelle Forebody Static Pressure, psia	270	177.01	5.552
905	PSFB(70)	Nacelle Forebody Static Pressure, psia	270	179.37	5.813
906	PSFB(71)	Nacelle Forebody Static Pressure, psia	270	183.05	5.968
907	PSFB(72)	Nacelle Forebody Static Pressure, psia	270	185.5	5.929
908	PSFB(73)	Nacelle Forebody Static Pressure, psia	270	187.25	5.836
909	PSFB(74)	Nacelle Forebody Static Pressure, psia	270	189	5.661
910	PSFB(75)	Nacelle Forebody Static Pressure, psia	270	189.87	5.542
495	PSAB(1)	Nacelle Afterbody Static Pressure,psia	0	202.3	4.981

Data File Variables (D106)

ESCORT Word Number	ESCORT Channel Name	Description	Angle, deg.	Model Station, inches	Radius, inches
496	PSAB(2)	Nacelle Afterbody Static Pressure,psia	0	203	4.969
497	PSAB(3)	Nacelle Afterbody Static Pressure,psia	0	203.7	4.935
498	PSAB(4)	Nacelle Afterbody Static Pressure,psia	0	204.71	4.852
499	PSAB(5)	Nacelle Afterbody Static Pressure,psia	0	205.72	4.725
500	PSAB(6)	Nacelle Afterbody Static Pressure,psia	0	206.72	4.571
501	PSAB(7)	Nacelle Afterbody Static Pressure,psia	0	207.73	4.367
502	PSAB(8)	Nacelle Afterbody Static Pressure,psia	0	208.74	4.154
503	PSAB(9)	Nacelle Afterbody Static Pressure,psia	0	209.99	3.877
504	PSAB(10)	Nacelle Afterbody Static Pressure,psia	0	211.5	3.521
505	PSAB(11)	Nacelle Afterbody Static Pressure,psia	0	213	3.21
506	PSAB(12)	Nacelle Afterbody Static Pressure,psia	0	216.5	3
507	PSAB(13)	Nacelle Afterbody Static Pressure,psia	90	202.3	4.981
508	PSAB(14)	Nacelle Afterbody Static Pressure,psia	90	203	4.969
509	PSAB(15)	Nacelle Afterbody Static Pressure,psia	90	203.7	4.935
510	PSAB(16)	Nacelle Afterbody Static Pressure,psia	90	204.71	4.852
511	PSAB(17)	Nacelle Afterbody Static Pressure,psia	90	205.72	4.725
512	PSAB(18)	Nacelle Afterbody Static Pressure,psia	90	206.72	4.571
513	PSAB(19)	Nacelle Afterbody Static Pressure,psia	90	207.73	4.367
514	PSAB(20)	Nacelle Afterbody Static Pressure,psia	90	208.74	4.154
515	PSAB(21)	Nacelle Afterbody Static Pressure,psia	90	209.99	3.877

Data File Variables (D106)

ESCORT Word Number	ESCORT Channel Name	Description	Angle, deg.	Model Station, inches	Radius, inches
516	PSAB(22)	Nacelle Afterbody Static Pressure,psia	90	211.5	3.521
517	PSAB(23)	Nacelle Afterbody Static Pressure,psia	90	213	3.21
518	PSAB(24)	Nacelle Afterbody Static Pressure,psia	90	216.5	3
519	PSAB(25)	Nacelle Afterbody Static Pressure,psia	180	202.3	4.981
520	PSAB(26)	Nacelle Afterbody Static Pressure,psia	180	203	4.969
521	PSAB(27)	Nacelle Afterbody Static Pressure,psia	180	203.7	4.935
522	PSAB(28)	Nacelle Afterbody Static Pressure,psia	180	204.71	4.852
523	PSAB(29)	Nacelle Afterbody Static Pressure,psia	180	205.72	4.725
524	PSAB(30)	Nacelle Afterbody Static Pressure,psia	180	206.72	4.571
525	PSAB(31)	Nacelle Afterbody Static Pressure,psia	180	207.73	4.367
526	PSAB(32)	Nacelle Afterbody Static Pressure,psia	180	208.74	4.154
527	PSAB(33)	Nacelle Afterbody Static Pressure,psia	180	209.99	3.877
528	PSAB(34)	Nacelle Afterbody Static Pressure,psia	180	211.5	3.521
529	PSAB(35)	Nacelle Afterbody Static Pressure,psia	180	213	3.21
530	PSAB(36)	Nacelle Afterbody Static Pressure,psia	180	216.5	3
531	PSAB(37)	Nacelle Afterbody Static Pressure,psia	270	202.3	4.981
532	PSAB(38)	Nacelle Afterbody Static Pressure,psia	270	203	4.969
533	PSAB(39)	Nacelle Afterbody Static Pressure,psia	270	203.7	4.935
534	PSAB(40)	Nacelle Afterbody Static Pressure,psia	270	204.71	4.852
535	PSAB(41)	Nacelle Afterbody Static Pressure,psia	270	205.72	4.725

Data File Variables (D106)

ESCORT Word Number	ESCORT Channel Name	Description	Angle, deg.	Model Station, inches	Radius, inches
536	PSAB(42)	Nacelle Afterbody Static Pressure,psia	270	206.72	4.571
537	PSAB(43)	Nacelle Afterbody Static Pressure,psia	270	207.73	4.367
538	PSAB(44)	Nacelle Afterbody Static Pressure,psia	270	208.74	4.154
539	PSAB(45)	Nacelle Afterbody Static Pressure,psia	270	209.99	3.877
540	PSAB(46)	Nacelle Afterbody Static Pressure,psia	270	211.5	3.521
541	PSAB(47)	Nacelle Afterbody Static Pressure,psia	270	213	3.21
542	PSAB(48)	Nacelle Afterbody Static Pressure,psia	270	216.5	3

Escort Readings (D106)

- Refer to D106 Data file for Mach/Hplate combinations

Run	Start RDG	Stop RDG	Config
4	530	548	Tare
4	550	609	Tare
4	613	677	Tare
7	753	757	43.0/43.5
7	766	770	43.0/43.5
7	775	779	43.0/43.5
15	1380	1389	54.1/53.5
15	1391	1394	54.1/53.5
16	1429	1431	54.1/53.5
38	2843	2923	60.5/59.0
39	2927	2992	64.4/61.8
40	2997	3001	62.9/60.5
40	3003	3051	62.9/60.5
40	3053	3059	62.9/60.5
40	3061	3062	62.9/60.5
40	3064	3070	62.9/60.5

Open Rotor papers based on the GE/NASA work at Glenn Research Center.

Elliott, David M., "Initial Investigation of the Acoustics of a Counter Rotating Open Rotor Model With Historical Baseline Blades in a Low Speed Wind Tunnel," AIAA 2011-2760, 17th AIAA/CEAS Aeroacoustics Conference, Portland, Oregon, June 2011.

Stephens, David and Envia, Edmane, "Acoustic Shielding for a Model Scale Counter-rotation Open Rotor," AIAA 2011-2940, 17th AIAA/CEAS Aeroacoustics Conference, Portland, Oregon, June 2011.

Berton, Jeffery J., "Empennage Noise Shielding Benefits for an Open Rotor Transport," AIAA 2011-2764, 17th AIAA/CEAS Aeroacoustics Conference, Portland, Oregon, June 2011.

Hendricks, Eric, "DEVELOPMENT OF AN OPEN ROTOR CYCLE MODEL IN NPSS USING A MULTI-DESIGN POINT APPROACH," GT2011-46694, ASME Turbo Expo 2011, Vancouver, BC, June 2011.

Van Zante, Dale, Gazzaniga, John, Eliott, David, and Woodward, Richard, "An Open Rotor Test Case: F31/A31 Historical Baseline Blade Set," ISABE-2011-1310, Gothenburg, Sweden, September 2011.

Van Zante, Dale E. and Wernet, Mark P., "Tip Vortex and Wake Characteristics of a Counterrotating Open Rotor," AIAA-2012-4039, 48th AIAA/ASME/SAE/ASEE Joint Propulsion Conference, Atlanta, GA, 29 July – August 1, 2012.

Hendricks, Eric S. and Tong, Michael T., "Performance and Weight Estimates for an Advanced Open Rotor Engine," AIAA-2012-3911, 48th AIAA/ASME/SAE/ASEE Joint Propulsion Conference, Atlanta, GA, 29 July – August 1, 2012.

Stephens, David B., "Nearfield Unsteady Pressures at Cruise Mach Numbers for a Model Scale Counter-Rotation Open Rotor," AIAA-2012-2264, 18th AIAA/CEAS Aeroacoustics Conference, Colorado Springs, CO, June 2012.

Guynn, M., Berton, J., Hendricks, E., Tong, M., Haller, W., & Thurman, D. (2011). Initial Assessment of Open Rotor Propulsion Applied to an Advanced Single-Aisle Aircraft. 10th AIAA Aviation Technology, Integration, and Operations (ATIO) Conference, AIAA-2011-7058. Virginia Beach, VA.