Fundamental Aeronautics Program/ Supersonics Project
Airport Noise Tech Challenge
Status Fall 2011

NASA lead: James Bridges

Presented at Acoustics Technical Working Group

18 October 2011, Langley Research Center

Supported by NASA Fundamental Aero Program/Supersonics Project

Measuring Progress:
Airport Noise Technical Challenge

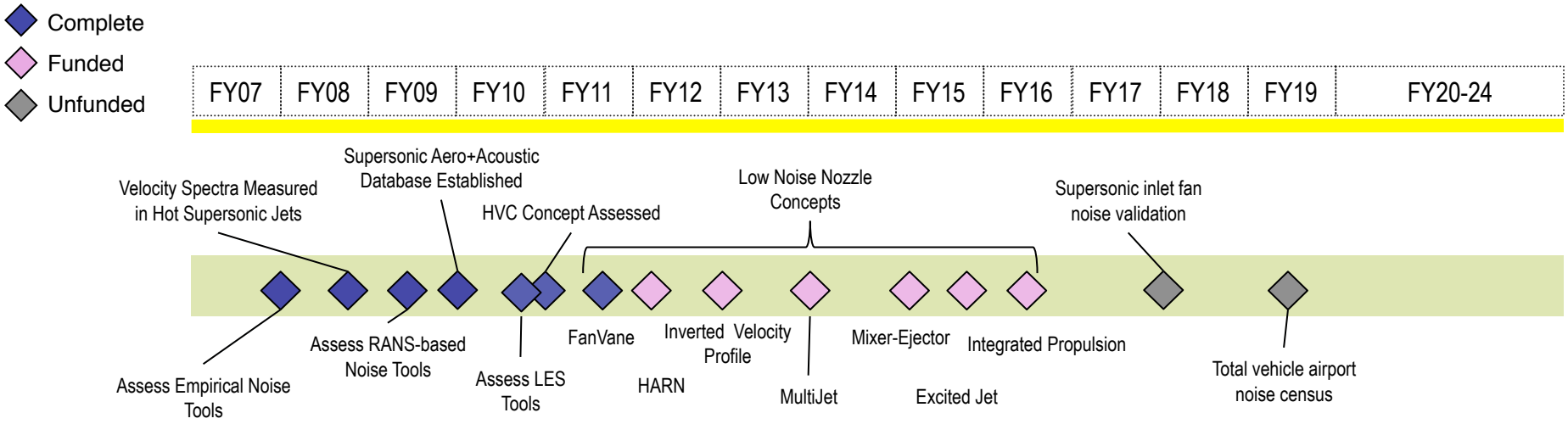

Recent Progress Toward Technical Challenges	Intermediate and Final Exams to Check for Success

• Tool Development
  • Expt
  • Empirical
  • RANS-based
  • LES
• Concept Development
  • FanVane
  • High Aspect Ratio Nozzles
  • Inverted Velocity Profile
  • Multi-jet
  • Mixer-Ejector
  • Plasma Actuator
  • Integrated Propulsion
	• Milestones 2006-2010 were tied to **tool** development
	• Milestones 2011-2015 are tied to low-noise **concepts**
	• Near-term Deliverables:
	  • Suite of **empirical** noise prediction modules in system analysis toolset.
	  • **High-fidelity** acoustic prediction tools for unique exhaust system concepts.
	• Final Deliverables
	  • **Concepts** and physics-based **Tools demonstrated** on detailed design of integrated nozzle validation test.

Supersonics/Airport Noise: Exhaust Noise Reduction Technologies

Concepts	Tools			
	Experimental	Empirical	RANS-based	LES
•Offset stream	Ready	Ready	Ready	
•Inverted velocity profile	Ready	Ready	Ready	Ready
•High aspect ratio nozzles	Ready	Ready	Ready	Ready
•Multiple Jets	Ready	Ready	Ready	
•Mixer-ejector	Ready	Ready	Ready	
•Jet Excitation	Ready	Needs Development		Ready
•Integrated Propulsion	Needs Development	Needs Development	Needs Development	Needs Development

Tool Development Scale

Needs Development | Ready

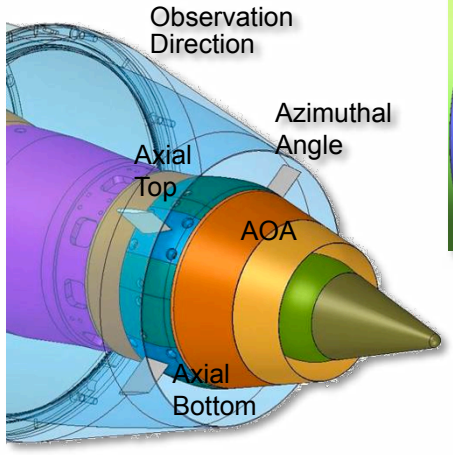

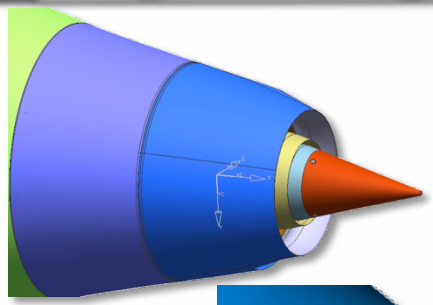

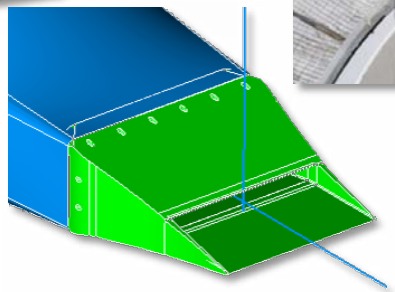

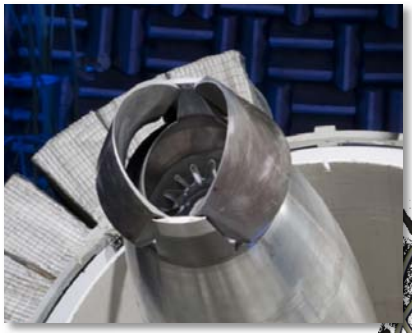

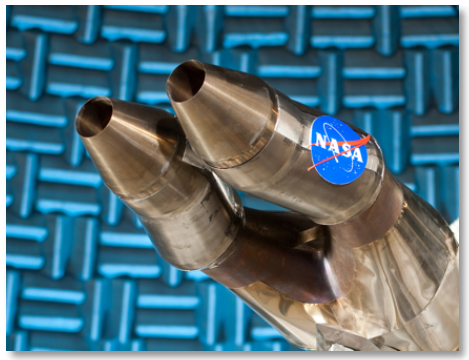

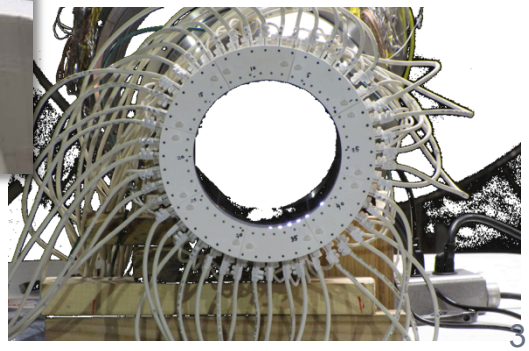

N+2 GE IVP—Experiments

Acoustic and Flow Diagnostic Tests (June—August 2011)

- Full matrix + single-flow reference nozzle
- Far-field acoustics; PIV flow diagnostics; phased array source diagnostics
- Delivered data to GE for final report.

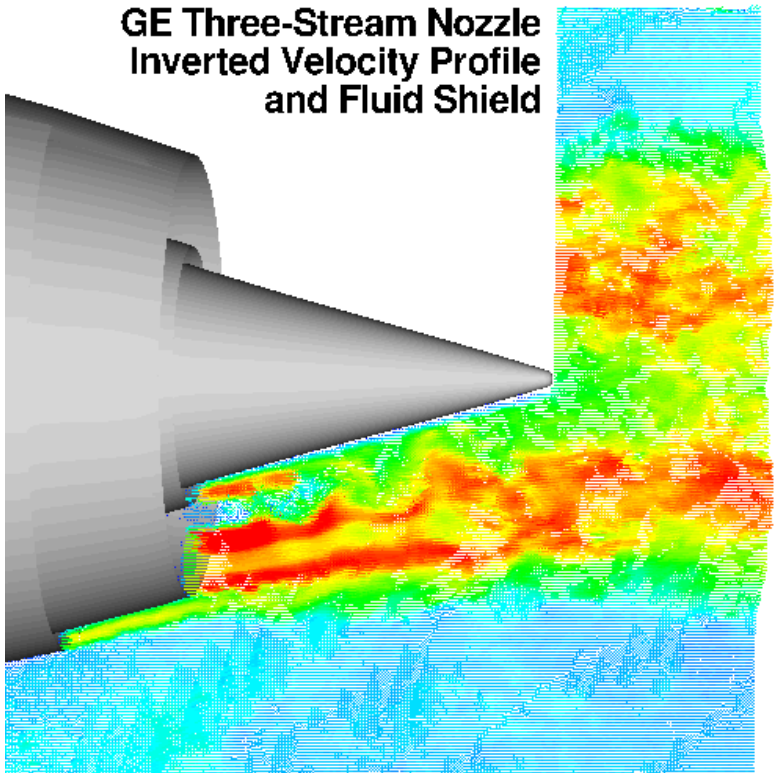

PIV Instantaneous Velocity Vectors

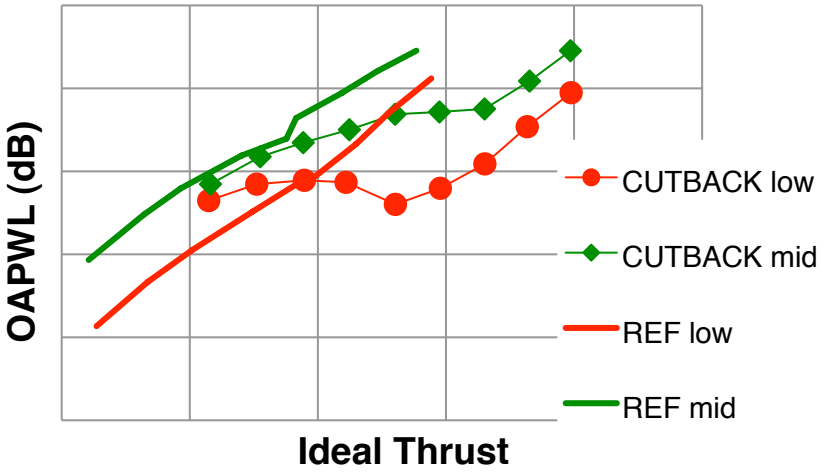

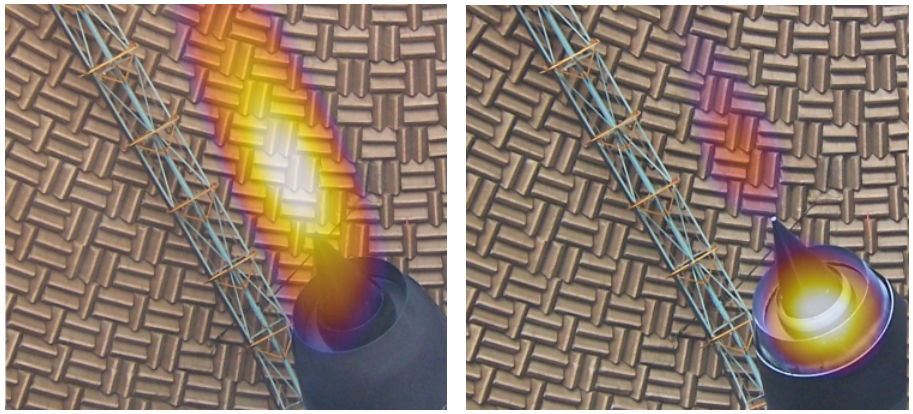

Phased Array Acoustic Source Distributions

N+2 GE IVP—Empirical Tools

djet Predictions (June 2011)

- Simple code based on approximating multi-stream jet by equivalent shear layers
- Developed for conventional velocity profiles—applied to IVP.
- Assumed convergent nozzles—did not account for separation noise!

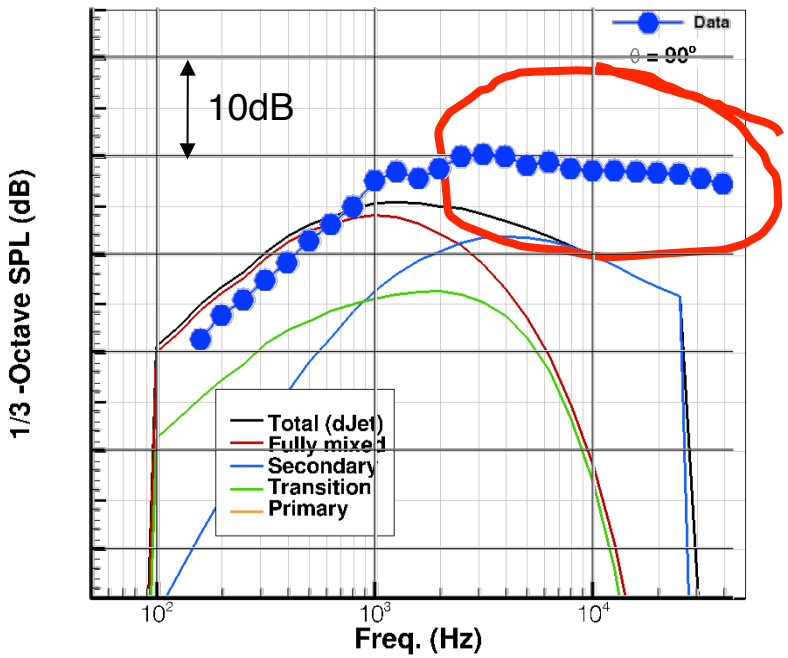

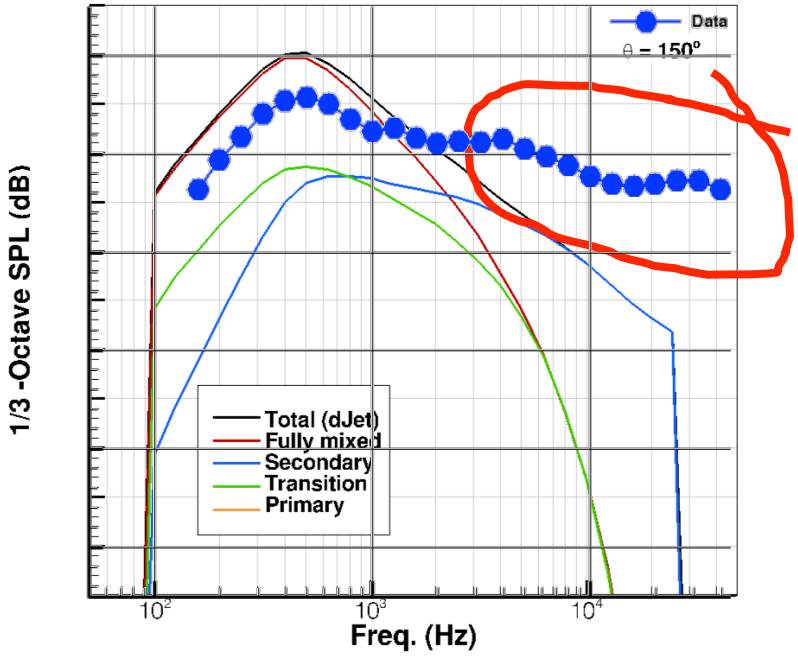

N+2 GE IVP—RANS-based Tools

Fluent/JeNo* (June 2011)

Turbulent Kinetic Energy

GE RANS CFD

NASA PIV

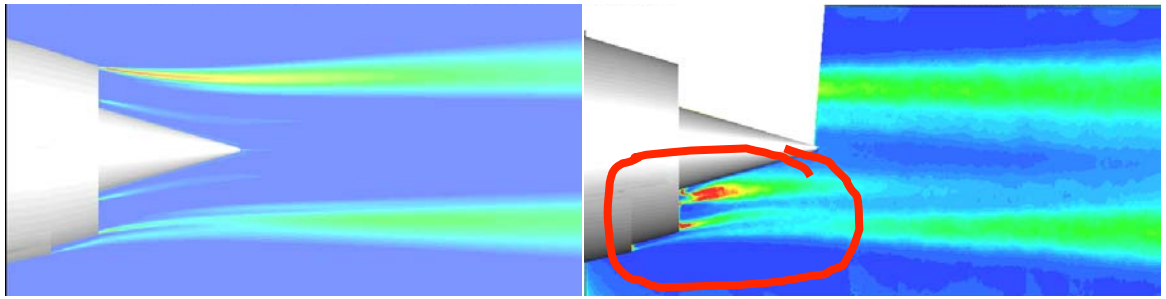

Causes for mismatch:

- JeNo calibrated for cold jet only
- Significant TKE near nozzle

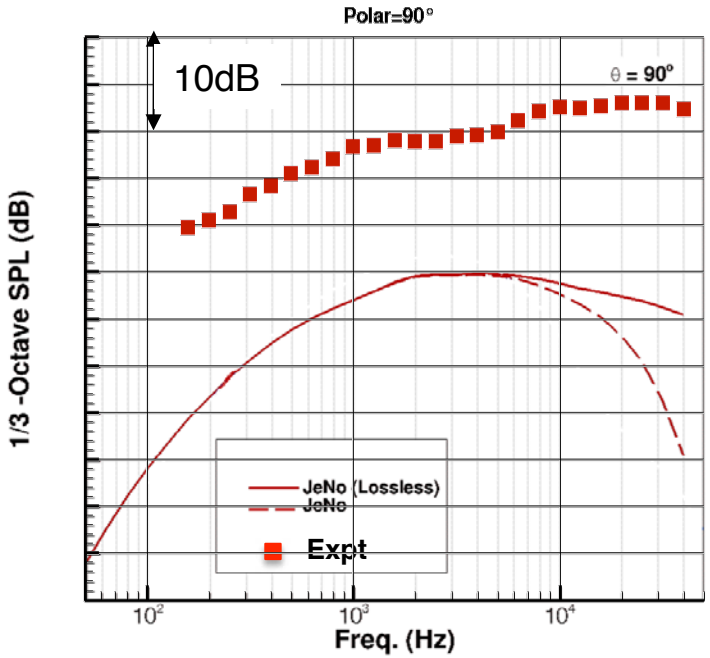

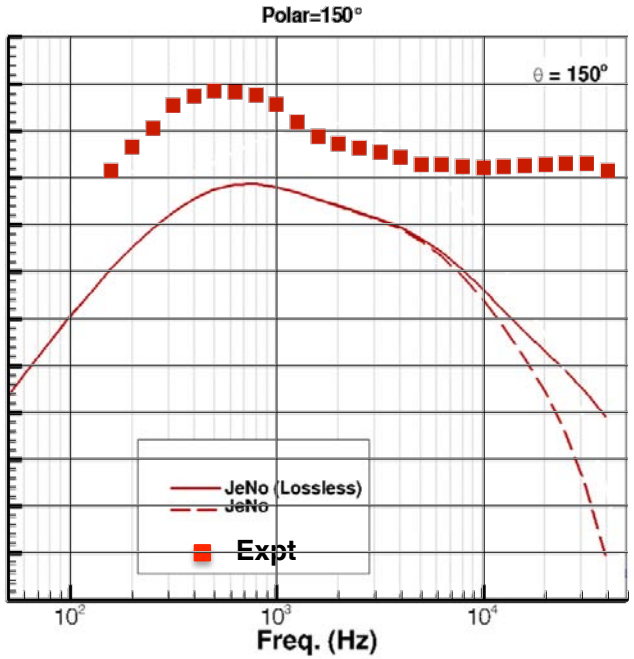

N+2 GE IVP—LES

GE-Global (Sept 2011)

In process—GE has not delivered yet

High Aspect Ratio Nozzle—Experiments

Extensible Rectangular Nozzle (ERN11) (Feb 2011)

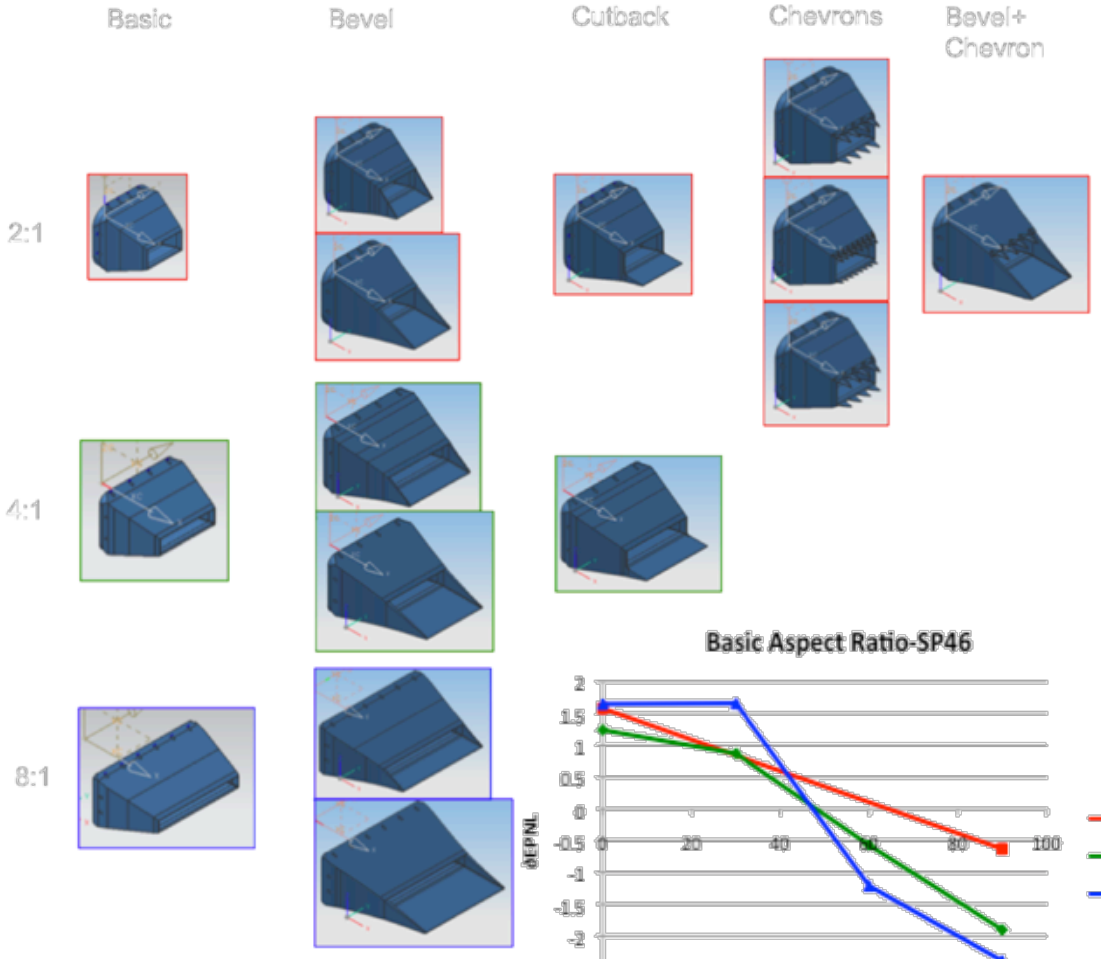

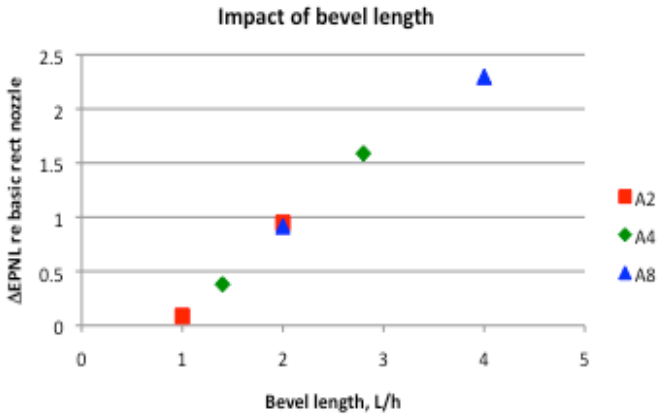

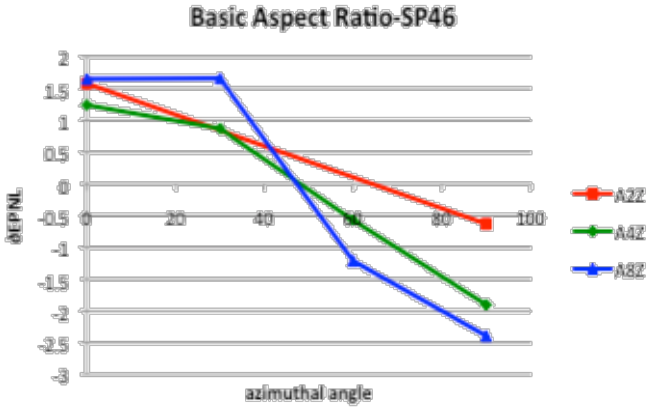

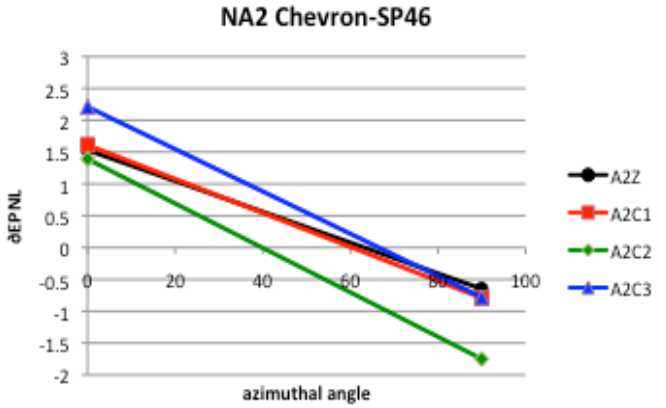

High Aspect Ratio Nozzle—Experiments

Extensible Rectangular Nozzle (ERN) 2nd gen

- Take existing 2:1 and 8:1 nozzles…

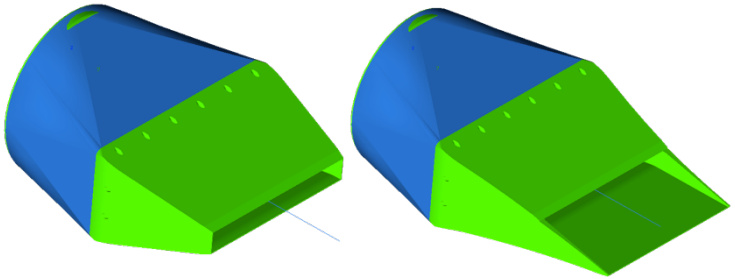

- Create new concepts based on ERN11 findings

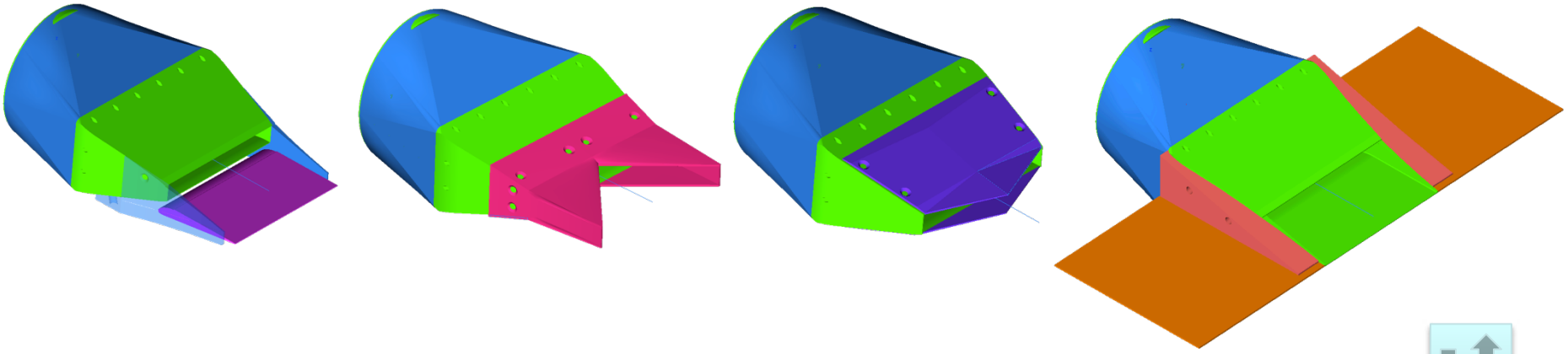

High Aspect Ratio Nozzles—Empirical Modeling

Aspect Ratio-Bevel Length Model (April 2011)

- An empirical model was constructed for the spectral directivity of the ERN11 data relative to an axisymmetric nozzle.
- Coefficients for Aspect Ratio and Bevel Length as a function of frequency and spherical directivity.
- Shown: Fitted coefficients for two frequencies, one observer location versus data.

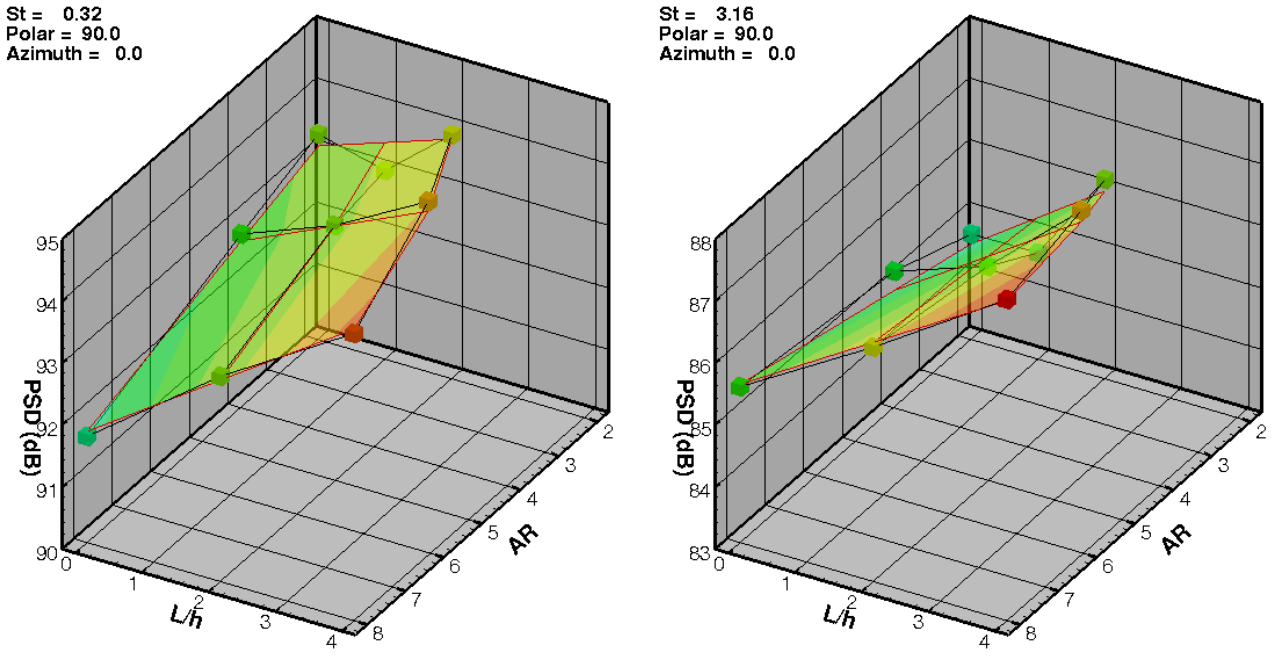

High Aspect Ratio Nozzles—RANS-based Tools

Elliptic Approximate Green Function (2011)

- Conformal mapping of Elliptic mean plume profiles to create Green's functions for propagation of sound through high-aspect-ratio plumes.
- Use in existing Acoustic Analogy jet noise codes.

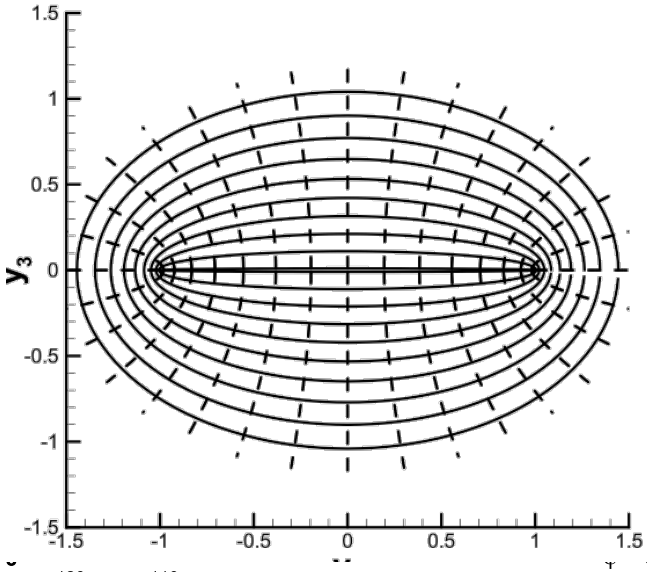

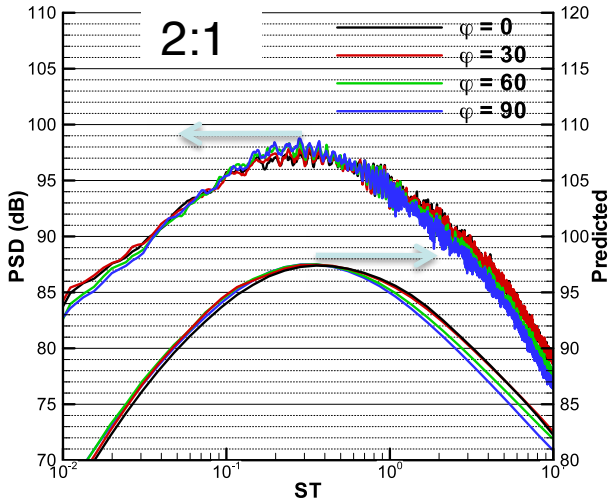

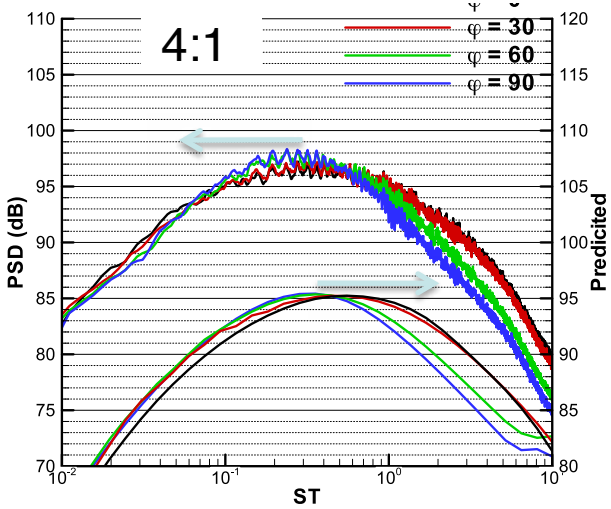

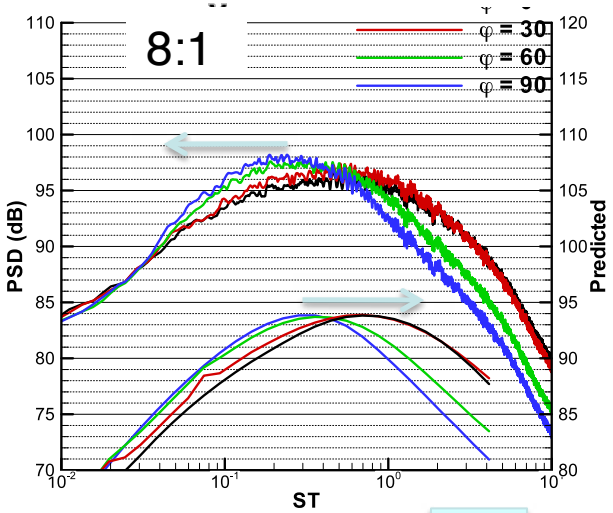

High Aspect Ratio Nozzles—Large Eddy Simulations

Stanford NRA/CharLES

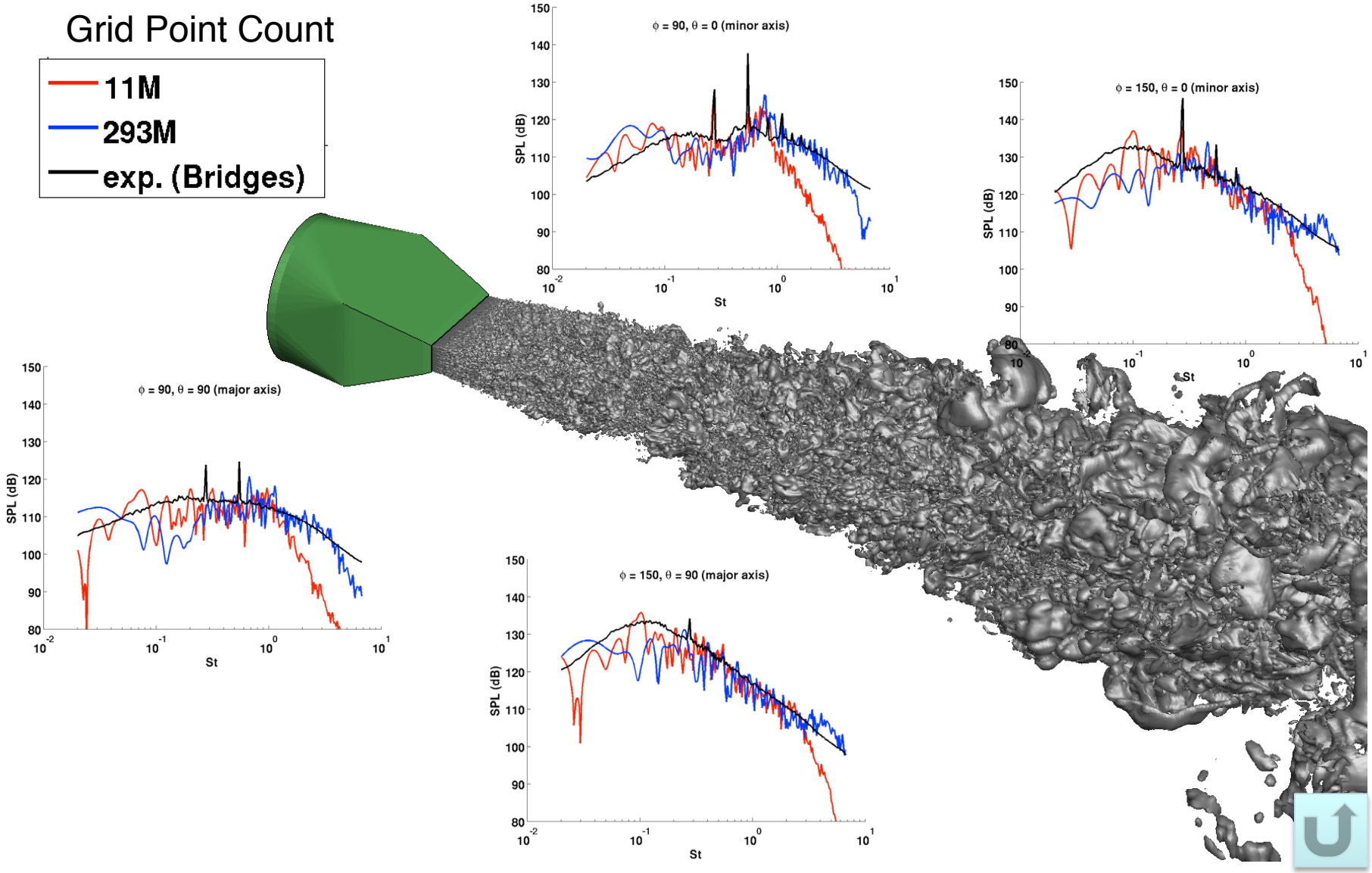

Multiple Jet Effects—Experiments

Twn10 and Twn12 Tests (May 2010)

- TWN10 using axisymmetric nozzles, diameter D, varying center-to-center spacings s over the range $2 < s/D < 5$.
- Mapped out spherical directivity for range of flows with and without forward flight.

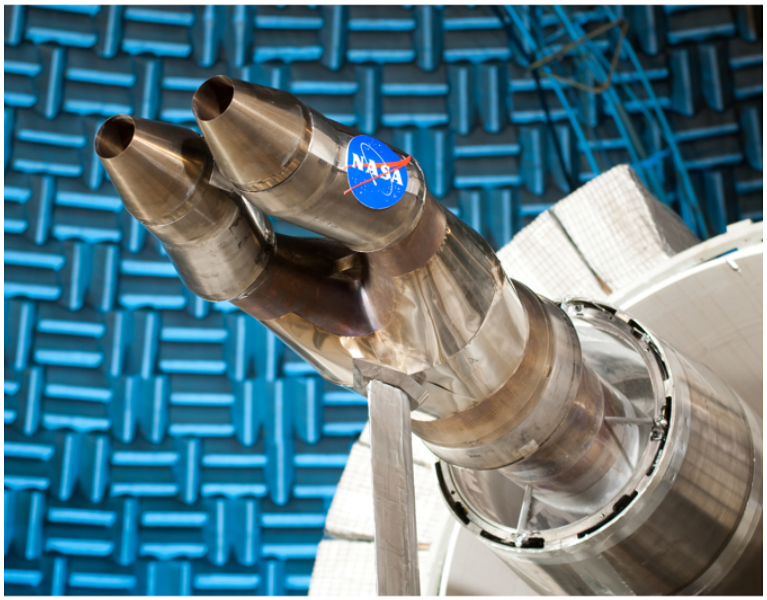

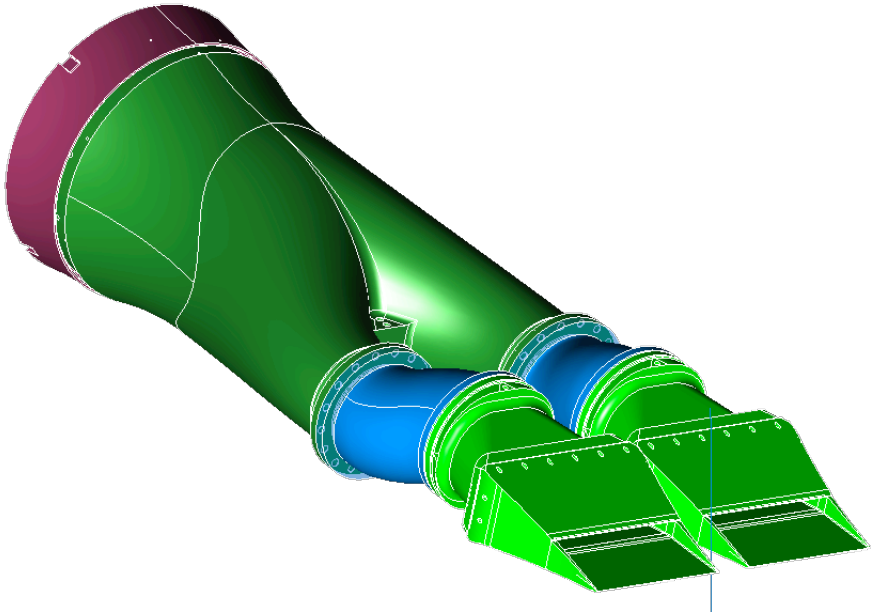

- Next test is Twn12 using rectangular nozzles from the ERN11 test (Spring 2012).
- Aspect ratios 2:1 and 8:1 with varying bevel length will be tested.
- PIV will also be acquired during Twn12 for both twin round, single rectangular, and twin rectangular configurations.

Multiple Jet Effects—Empirical Tools

Twin Jet ANOPP module (Coming 2012)

- Expect to use data from Twn10 and Twn12 tests to produce an empirical dataset for spectral directivity differences from single jet
- Parametrically vary jet spacing.

Multiple Jet Effects—RANS-based Tools

Approximate Green's Function for Twin Jet (Dec 2011)

- Conformal mapping of TwinJet mean plume profiles to create Green's functions for propagation of sound through twin plumes.
- Use in existing Acoustic Analogy jet noise codes.

$W(z) = u(y_2,y_3) + iv(y_2,y_3) = \ln(z^2-C^2)$
$z=y_2+iy_3$, C is a real constant

•Maps region $-\infty < u < \infty$, $-\pi < v < 3\pi$ to Cassinian ovals (constant u) in y_2, y_3.
•Approximate mean velocity and temperature contours.

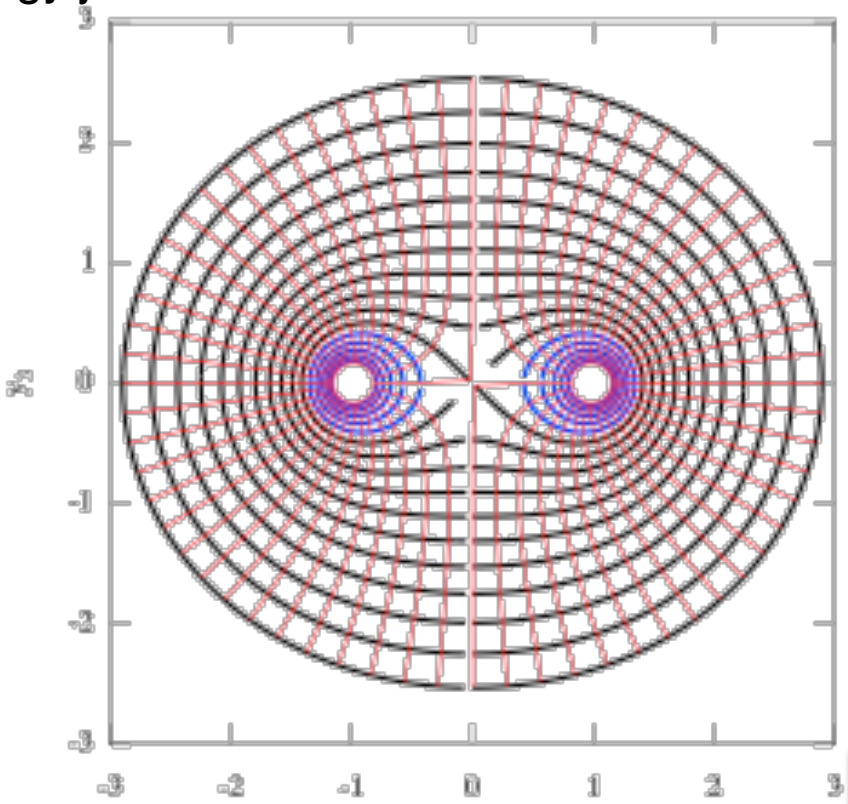

Mixer-Ejector—Experiments

N+2 RRLW Mixer-Ejector Test (April 2011)

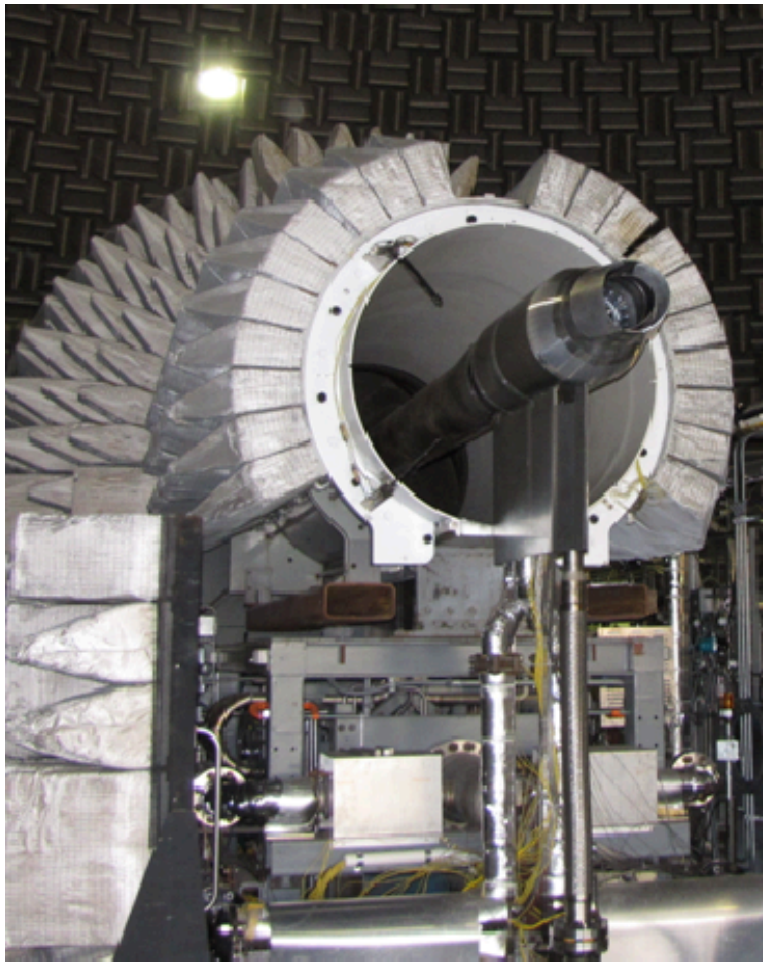

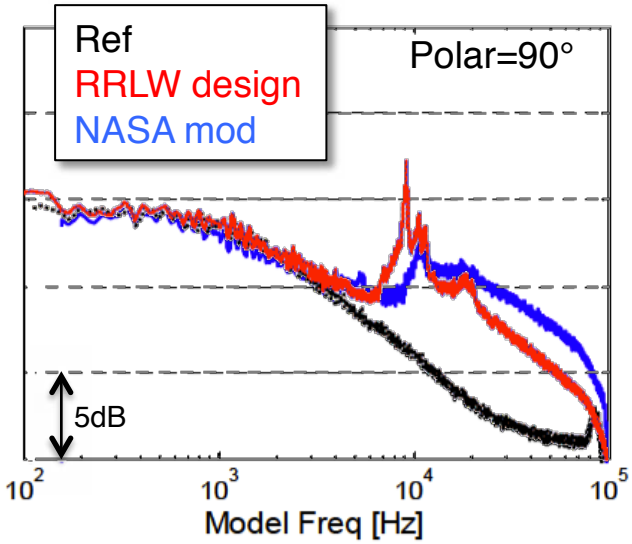

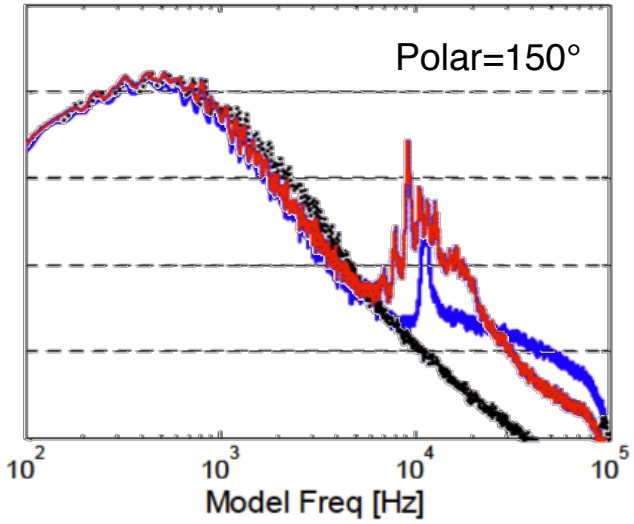

Mixer-Ejector—Experiments

Parametric Mixer-Ejector Test (Summer 2013)

- Objective: Design a series of Mixer-Ejector nozzles to provide parametric acoustic performance data for empirical and RANS-based prediction codes.
- Base parametric designs on (1) RTM performance code predictions, (2) RANS-based CFD with existing empirical acoustic predictions.
- Currently envisioning axisymmetric designs, possibly with enhanced mixer. Parametrically vary mixer/ejector area ratio, ejector length, primary flow and flight speed.
- Schedule:
  - Flow lines in Q2-Q3/FY12
  - Model mechanical design in Q4/FY12
  - Model fab in Q1-Q2/FY13 with test Q4/FY13

Mixer-Ejector—Empirical Tool

- To be based on Parametric Mixer-Ejector testing and RTM Mixer-Ejector performance codes

Mixer-Ejector—RANS-based Tools

HVC10 Mixer-Ejector—NASA-Generated RANS solution

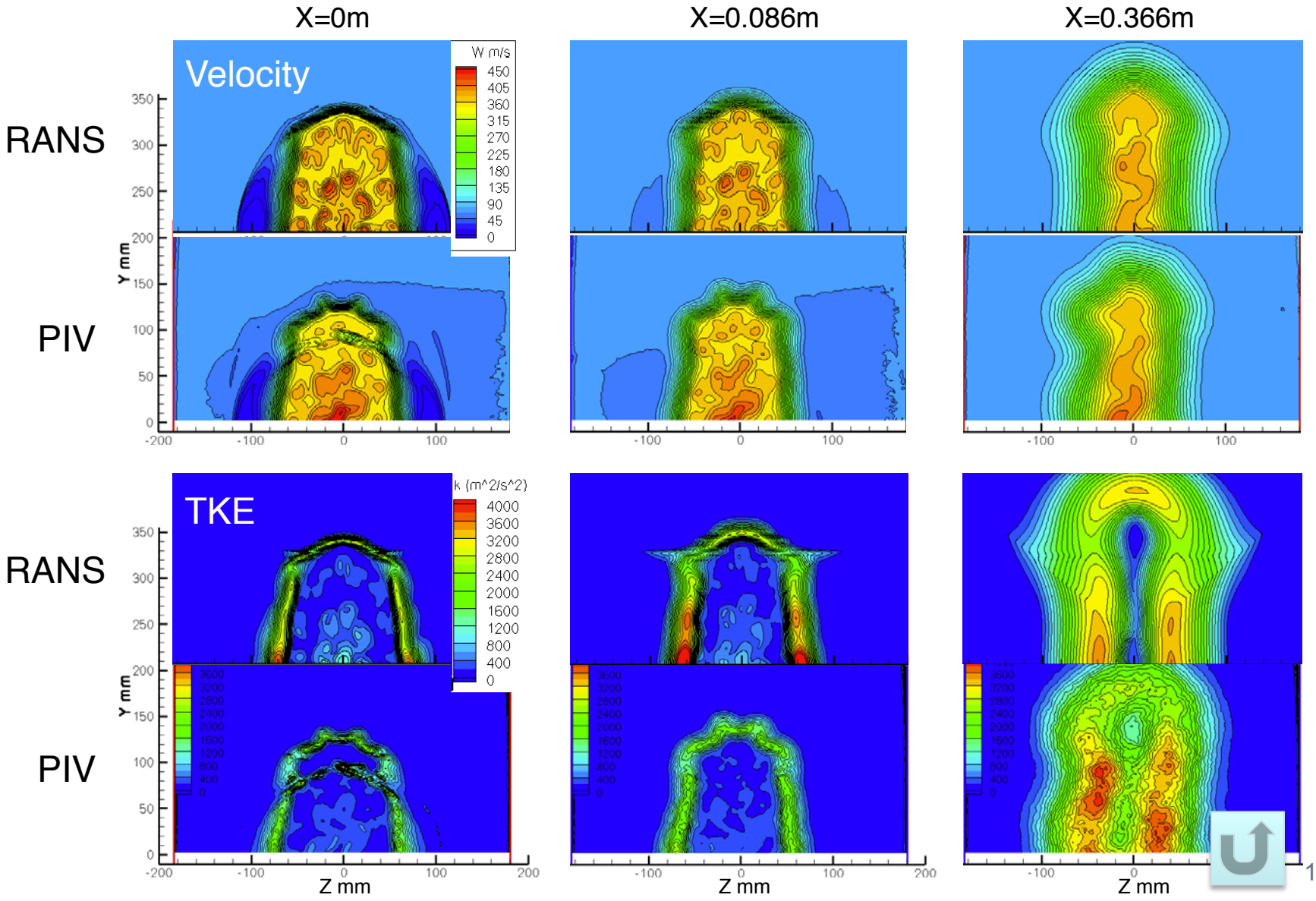

Plasma Actuator for Jet Control—Experiments

PAJE11 (March 2011)

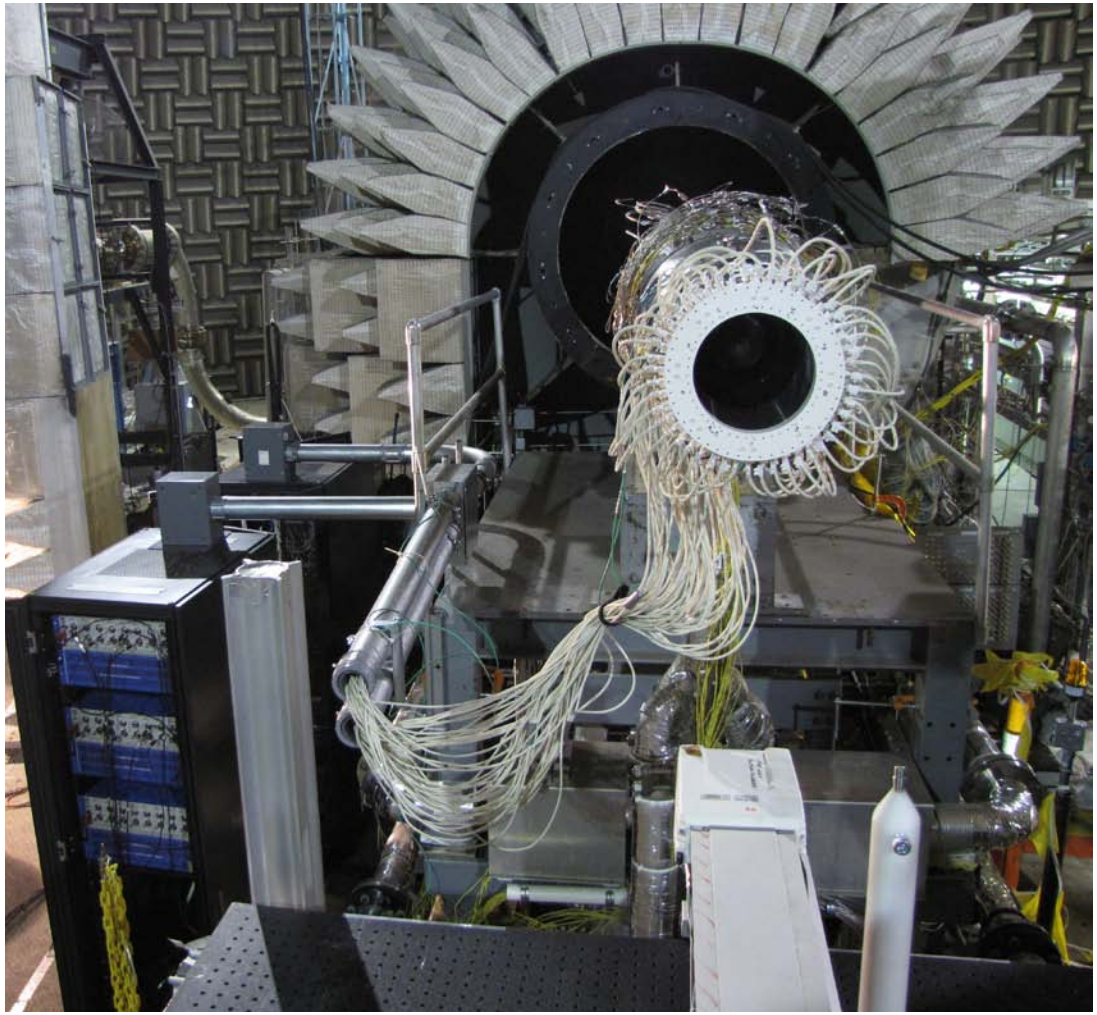

- Linear scale-up of 1”Ø C-D nozzle experiment at OSU.
- 48 Plasma Arc Actuators on 6.5”Ø, M_d=1.3 nozzle mounted on NASA GRC’s High Flow Jet Exit Rig.
- Used new OSU-designed electronics.
- Measured near-field instability wave and far-field acoustic response to input excitation.
- Found minimal effect.

Plasma Actuator for Jet Control—Experiments

PAJE12 (Fall 2011)

- Will reproduce OSU result exactly
- Scale up incrementally
  - Use existing ARN1 (1”Ø), ARN2 (2”Ø), and ARN3 (3”Ø) nozzles
- OSU design and fab ceramic collars + electrodes
- OSU modify/fix plasma actuator electronics
- Test in November/December on NASA GRC’s Small Hot Jet Acoustic Rig.

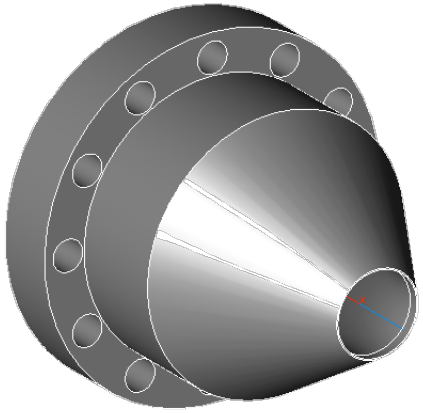

Original ARN2

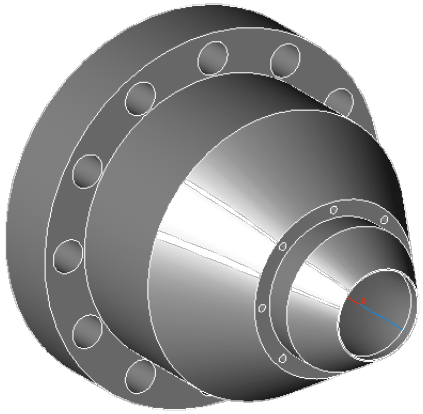

Modified ARN2

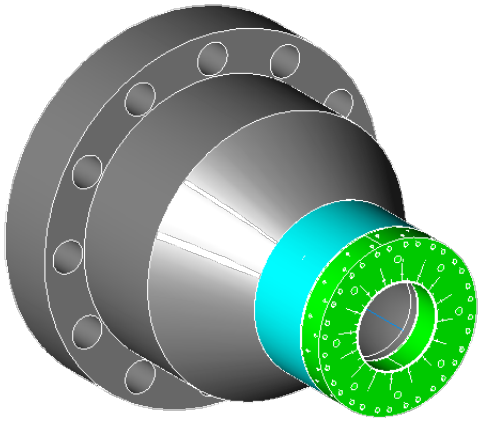

With ceramic extension

Plasma Actuator for Jet Control—LES

- LES solution coupled with Adjoint-based optimizer to minimize sound pressure using body forces at nozzle exit.
- UIUC/Bodony & Freund

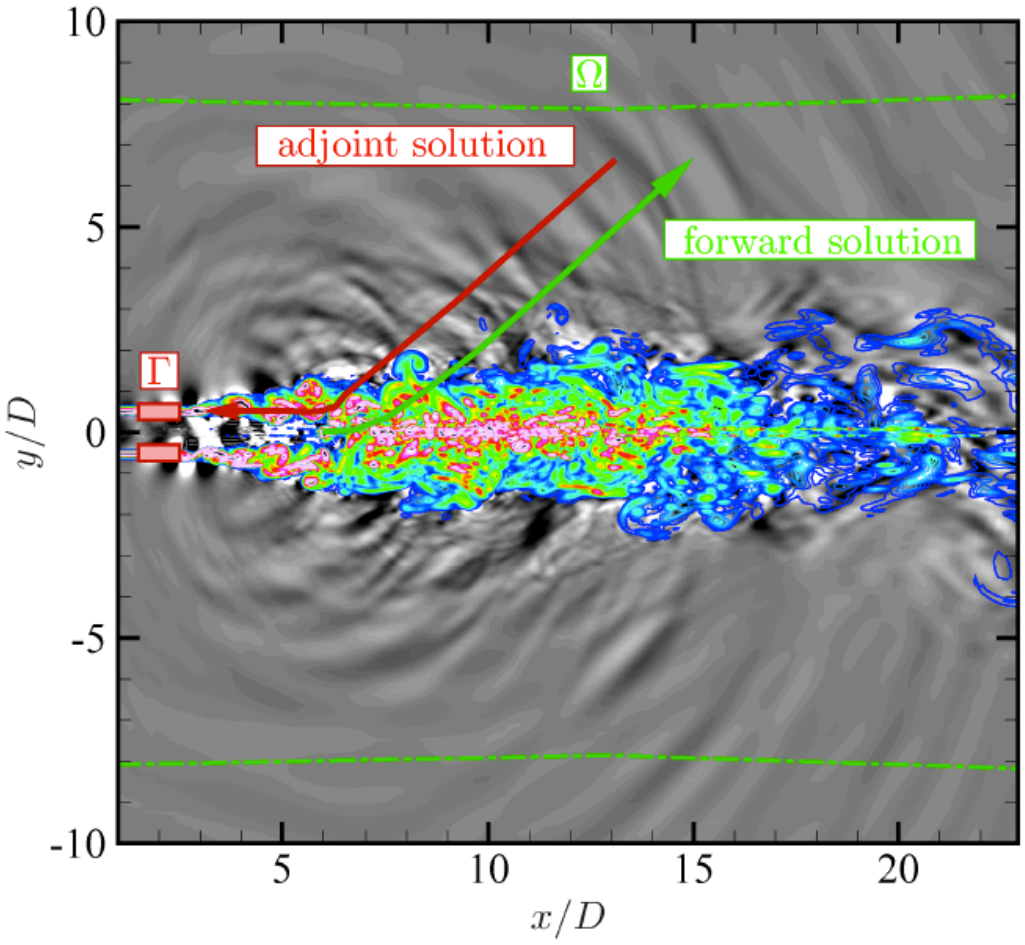

NASA

- Synopsis: An overview of the Airport Noise Technical Challenge area research is presented, first in milestones and second by task. A 'home page' containing the matrix of Concepts and Tools is used as a launching ground for pages that give brief status of each task in the Technical Challenge area. Tasks cover the low noise nozzle concepts of Offset Stream, Inverted Velocity Profile, High Aspect-Ratio, Multiple Jets, Mixer-Ejector, and Plasma Actuators. Tools being deployed to develop and document these Concepts are Experiments, Empirical codes, Reynolds-Averaged Navier-Stokes-based codes, and Large Eddy Simulations.