US009970781B2

(12) **United States Patent**
Christian et al.

(10) **Patent No.: US 9,970,781 B2**
(45) **Date of Patent: May 15, 2018**

(54) **APPARATUS FOR THREE-AXIS IMU CALIBRATION WITH A SINGLE-AXIS RATE TABLE**

(71) Applicant: **West Virginia University**, Morgantown, WV (US)

(72) Inventors: **John A. Christian**, Morgantown, WV (US); **Drew E. Bittner**, Greencastle, PA (US)

(73) Assignee: **WEST VIRGINIA UNIVERSITY**, Morgantown, WV (US)

(*) Notice: Subject to any disclaimer, the term of this patent is extended or adjusted under 35 U.S.C. 154(b) by 283 days.

(21) Appl. No.: **15/057,658**

(22) Filed: **Mar. 1, 2016**

(65) **Prior Publication Data**

US 2017/0199054 A1 Jul. 13, 2017

Related U.S. Application Data

(60) Provisional application No. 62/127,493, filed on Mar. 3, 2015.

(51) **Int. Cl.**
G01C 25/00 (2006.01)

(52) **U.S. Cl.**
CPC ***G01C 25/00*** (2013.01)

(58) **Field of Classification Search**
CPC G01C 25/00; G01C 25/005
See application file for complete search history.

(56) **References Cited**

U.S. PATENT DOCUMENTS

2,539,713 A * 1/1951 Wilkenson G01C 25/005 318/675
2,761,306 A * 9/1956 McNutt G01C 25/005 73/1.78
3,143,893 A * 8/1964 Jorgensen G01C 21/18 33/323
3,164,978 A * 1/1965 Sharman G01C 25/005 73/1.77

(Continued)

FOREIGN PATENT DOCUMENTS

CN 103278177 A 9/2013

OTHER PUBLICATIONS

Aggarwal, P., et al., A Standard Testing and Calibration Procedure for Low Cost MEMS Inertial Sensors and Units, The Journal of Navigation (2008), vol. 61, pp. 323-336.

(Continued)

Primary Examiner — David Bolduc
(74) *Attorney, Agent, or Firm* — Thomas | Horstemeyer, LLP

(57) **ABSTRACT**

Various methods and apparatuses are provided for calibrating a three-axis IMU sensor package using a single-axis rate table. In one embodiment, a method includes adjusting an x-axis position of a sensor by rotating an inner assembly along the circumference of the inner surface of the circular frame, adjusting a y-axis position of the sensor by rotating a portion of the inner assembly, spinning the single-axis rate table to generate z-axis rotation of the apparatus which results in simultaneous stimulation of all three axes of the sensor assembly, and obtaining measurements from the sensor corresponding to the x-axis position, the y-axis position, and the z-axis rotation of the apparatus.

20 Claims, 10 Drawing Sheets

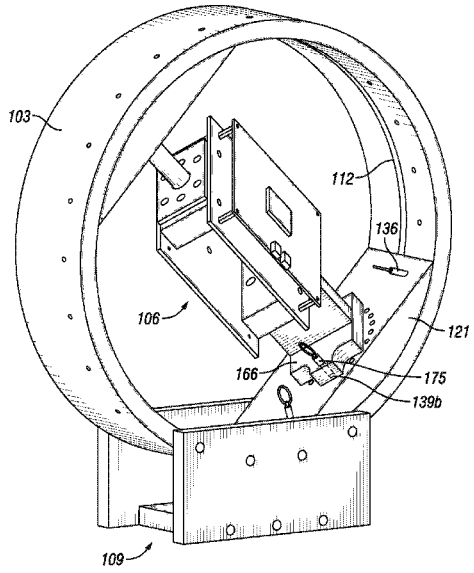

(56) **References Cited**

U.S. PATENT DOCUMENTS

3,253,472 A * 5/1966 Klemes G01C 25/00 33/318
3,508,832 A * 4/1970 Schroeder G01C 25/00 356/138
3,583,205 A * 6/1971 Erle F16C 32/0622 384/100
3,584,513 A * 6/1971 Gates G01C 19/02 73/504.18
3,795,784 A * 3/1974 Moll G01C 25/005 219/121.62
3,935,746 A * 2/1976 Moll G01C 25/005 73/462
4,028,524 A * 6/1977 Moll B23K 26/0823 219/121.69
4,583,178 A * 4/1986 Ameen G01C 25/005 244/3.2
6,209,383 B1 * 4/2001 Mueller G01C 19/72 73/1.37
6,234,799 B1 5/2001 Lin
7,030,968 B2 * 4/2006 D'Aligny G01B 11/002 356/139.1
8,527,228 B2 9/2013 Panagas
9,091,606 B2 * 7/2015 Fitz-Coy B64G 1/286
2002/0134154 A1 * 9/2002 Hsu G01C 19/5719 73/504.04
2003/0084704 A1 * 5/2003 Hanse G01C 25/005 73/1.38
2003/0115930 A1 * 6/2003 Kappi G01C 19/56 73/1.37
2006/0090357 A1 * 5/2006 Wuersch G01C 15/004 33/290
2006/0191148 A1 * 8/2006 Lippuner G01C 1/02 33/290
2007/0032951 A1 * 2/2007 Tanenhaus G01C 21/16 702/151
2007/0277586 A1 * 12/2007 Kamiya G01P 15/18 73/1.38
2008/0115562 A1 * 5/2008 Haino G01C 25/005 73/1.37
2008/0210025 A1 * 9/2008 Goossen F16M 11/041 74/5.34
2010/0024560 A1 * 2/2010 Shcheglov G01C 19/5684 73/649
2011/0077891 A1 3/2011 Koenig
2011/0202300 A1 * 8/2011 Udagawa G01B 21/045 702/95
2012/0130667 A1 * 5/2012 Fukushima G01C 19/00 702/96
2012/0203487 A1 8/2012 Johnson et al.
2014/0372063 A1 12/2014 Niu et al.
2015/0121989 A1 * 5/2015 Orzechowski G01C 25/00 73/1.38
2016/0223357 A1 * 8/2016 Frey, Jr. G01C 25/005

OTHER PUBLICATIONS

Wang, et al., "Intelligent Calibration Method of Low Cost MEMS Inertial Measurement Unit for an FPGA-based Navigation System," International Journal of Intelligent Engineering & Systems, vol. 4, No. 2, 2011.

Bittner D. Christian, et al., "Development of Alignment Technique for a Large Number of Redundant Inertial Measurement Units," 65th International Astronautical Congress, Toronto, Canada, IAC-14-C1.5.8, 2014.

Drew E. Bittner, "Advances in MEMS IMU Cluster Technology for Small Satellite Applications," Thesis submitted to The Benjamin M. Statler College of Engineering and Mineral Resources of West Virginia University, Morgantown, WV, 2015.

Jixin Lv, et al. "A Method of Low-Cost IMU Calibration and Alignment," Proceedings of the 2016 IEEE/SICE International Symposium on System Integration, Sapporo Convention Center, Sopporo, Japan, Dec. 13-15, 2016, pp. 373-378.

Sitank Bhatia, et al., "Development of an Analytical Method of IMU Calibration," 13th International Multi-Conference on Systems, Signals, Devices, pp. 131-135, 2016.

* cited by examiner

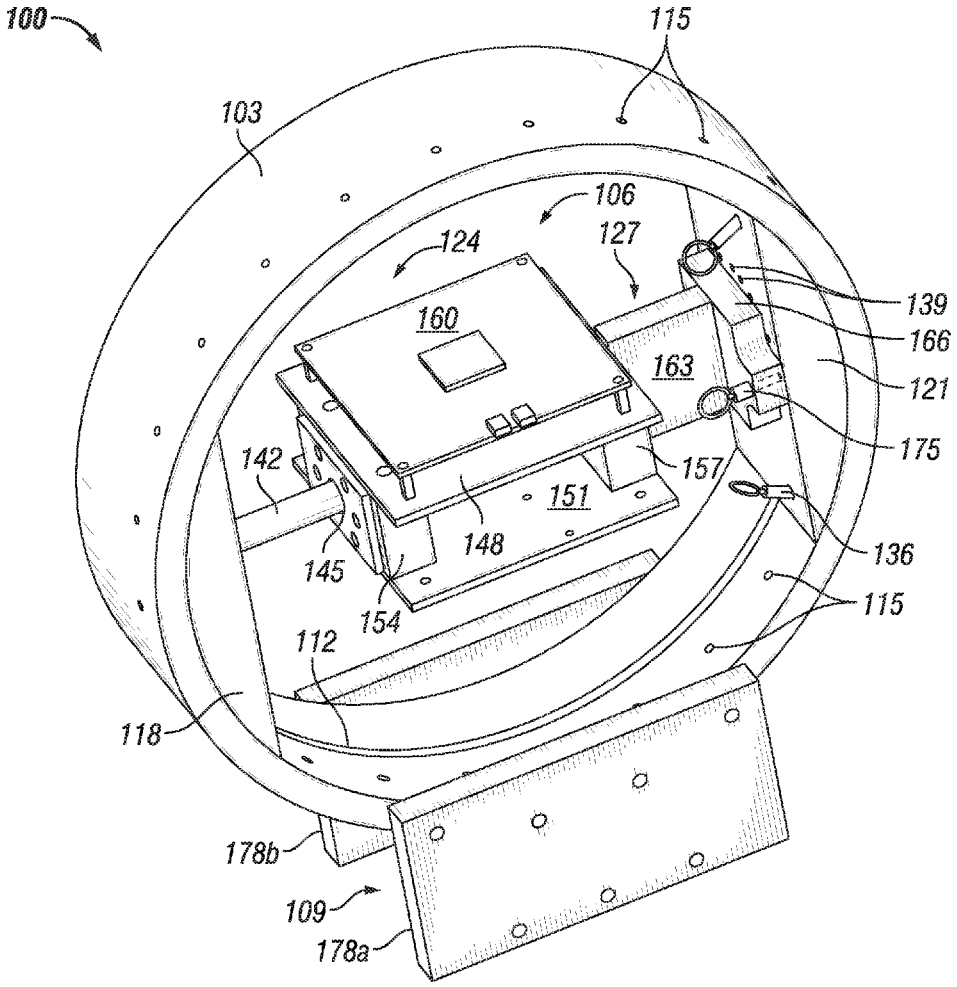
100
115
103
106
124
127
139
166
160
163
121
175
142
157
151
148
136
145
154
115
112
118
178b
109
178a

FIG. 1

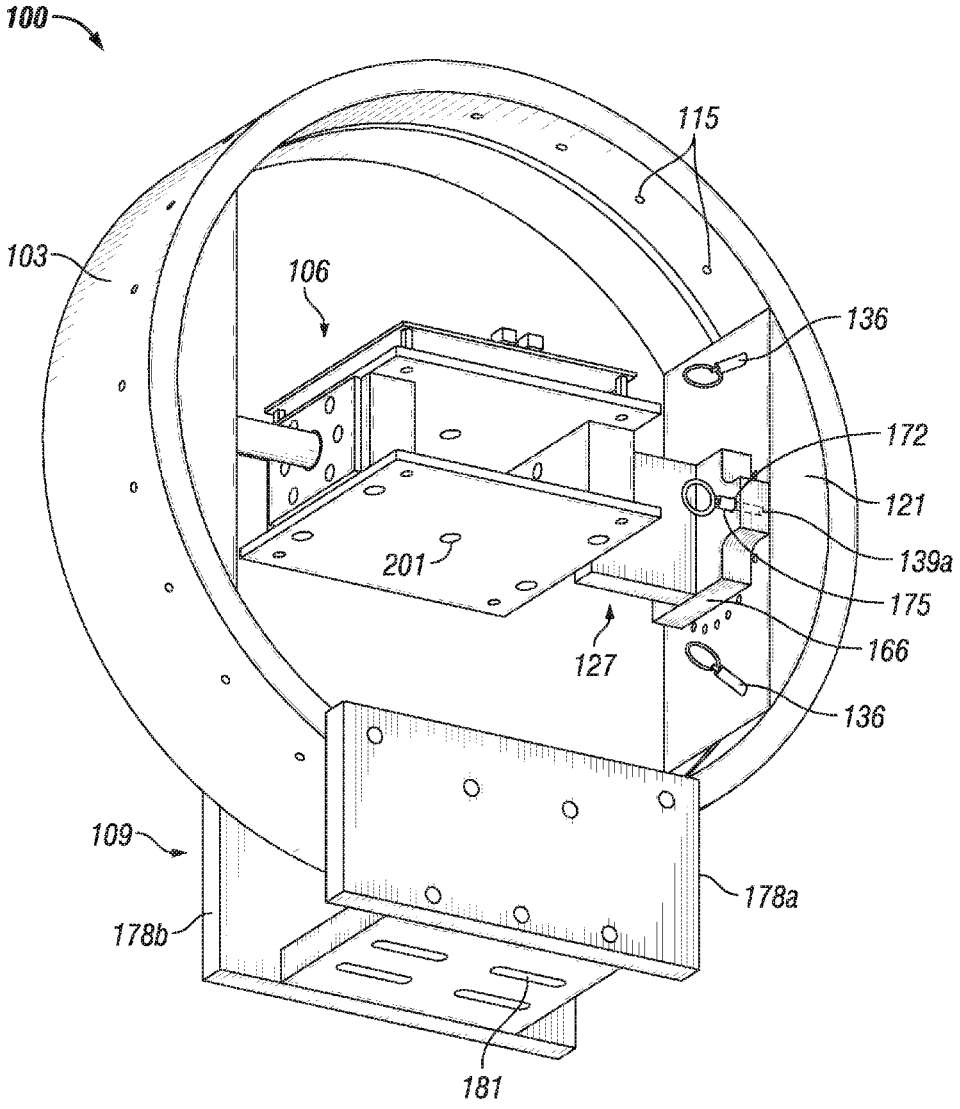
100
115
103
106
136
172
121
139a
175
166
136
201
127
109
178a
178b
181

FIG. 2

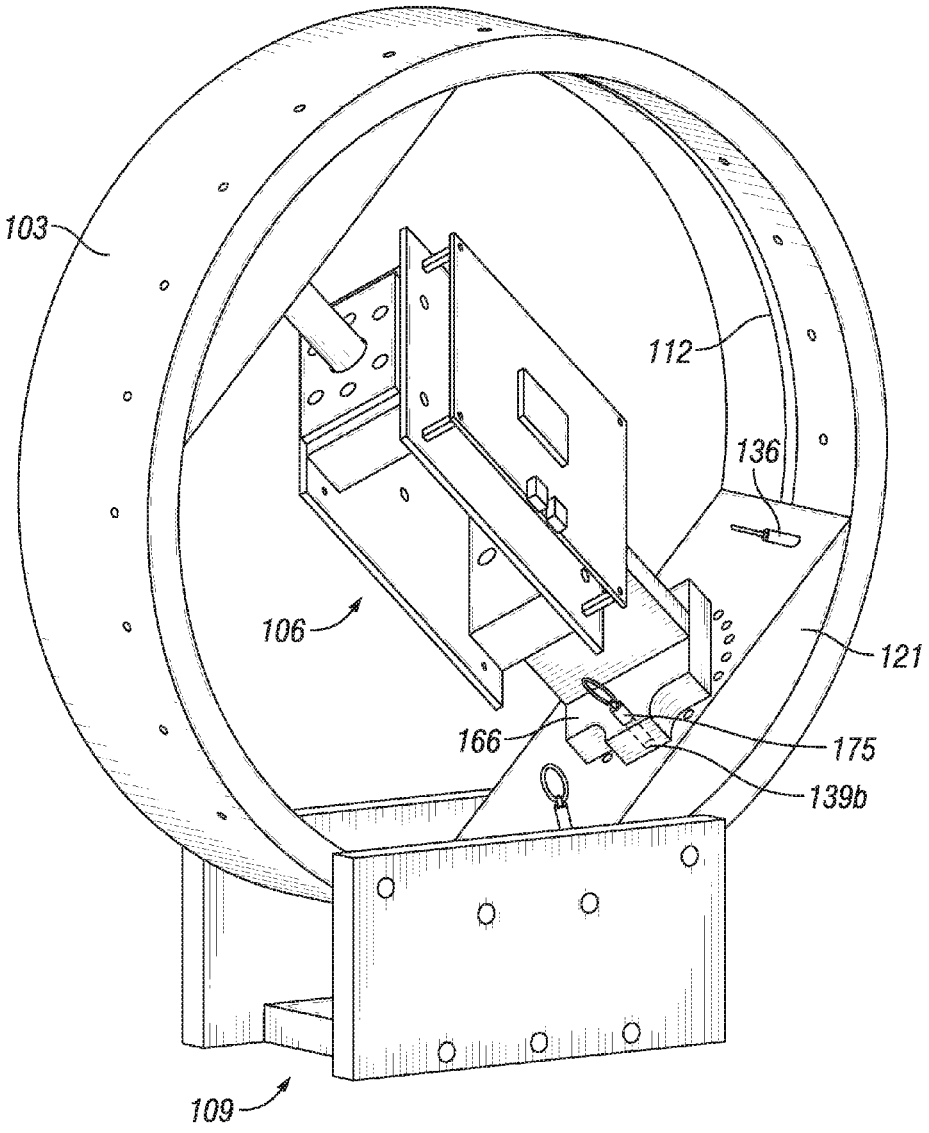

FIG. 3

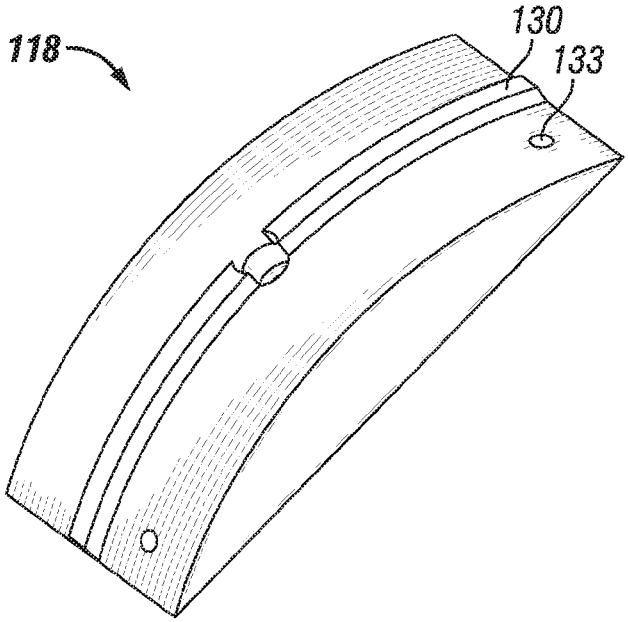

FIG. 4A

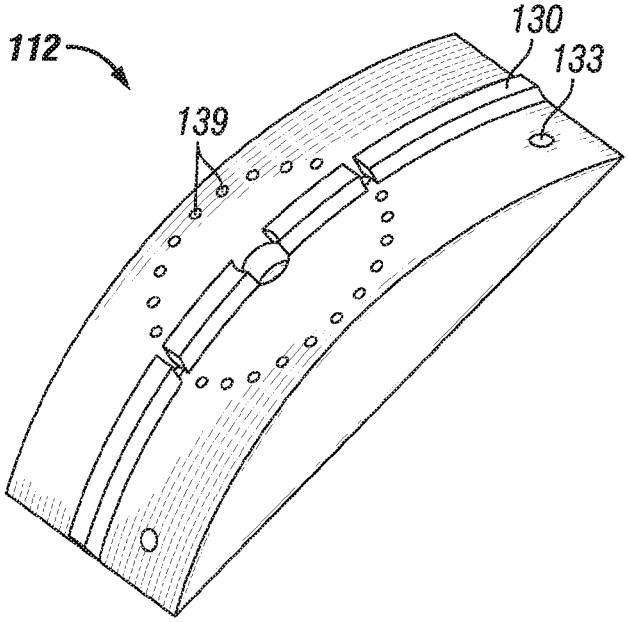

FIG. 4B

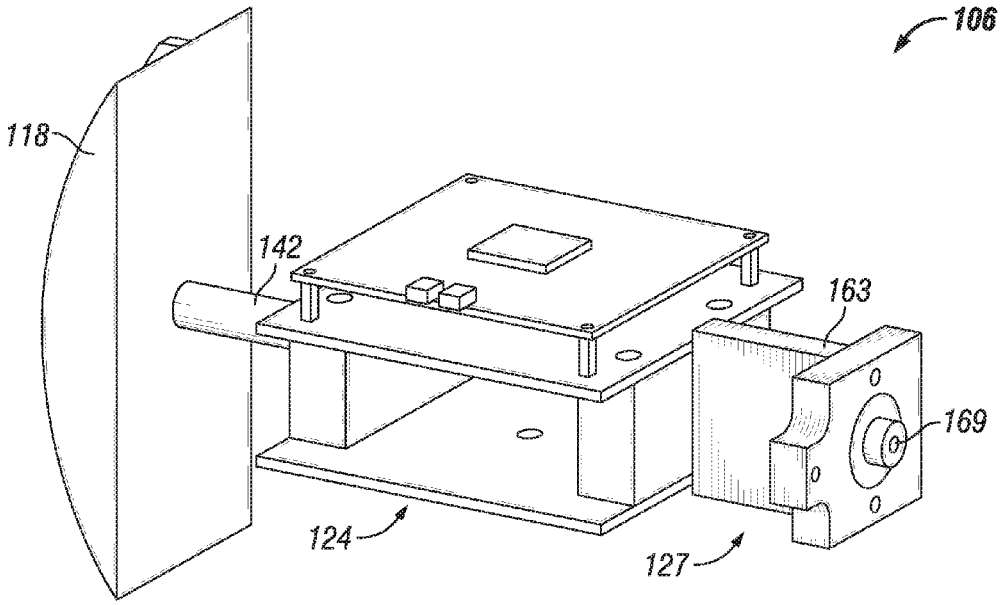

FIG. 5

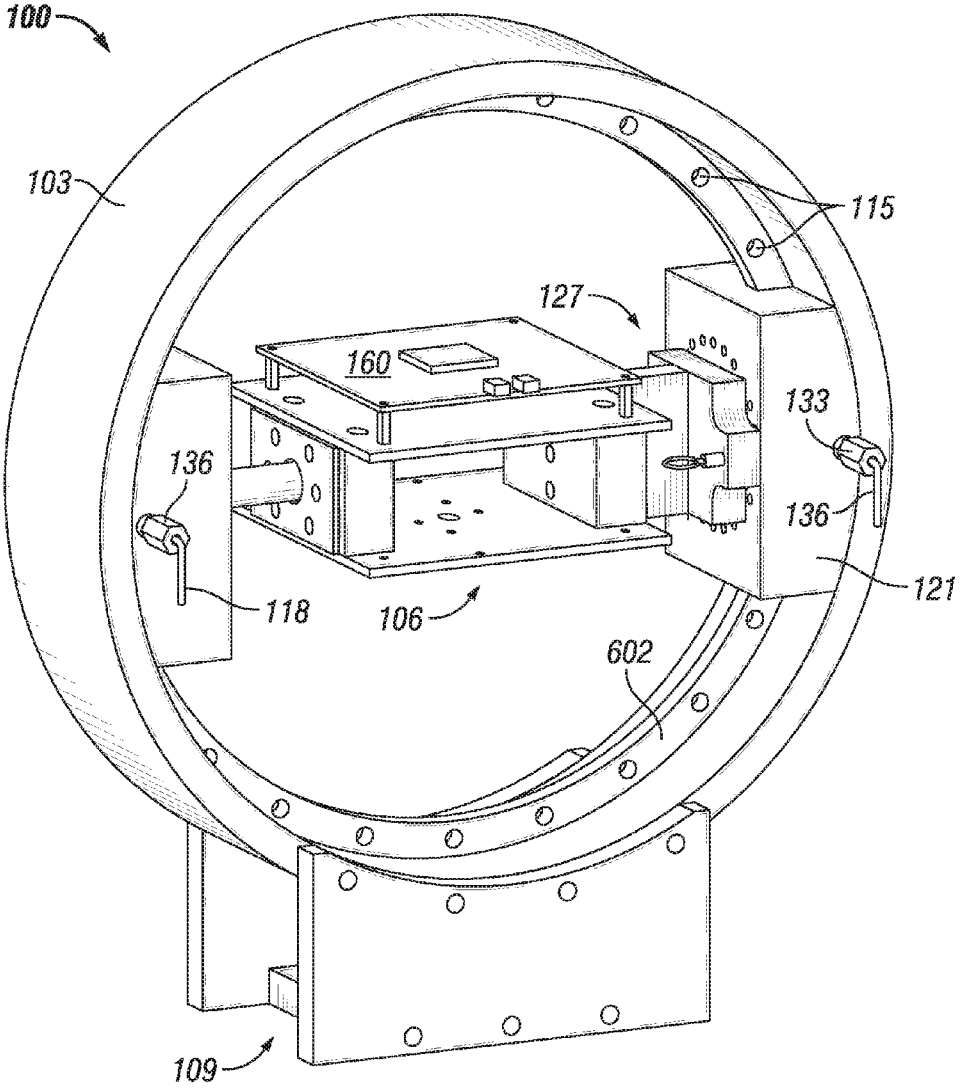

FIG. 6

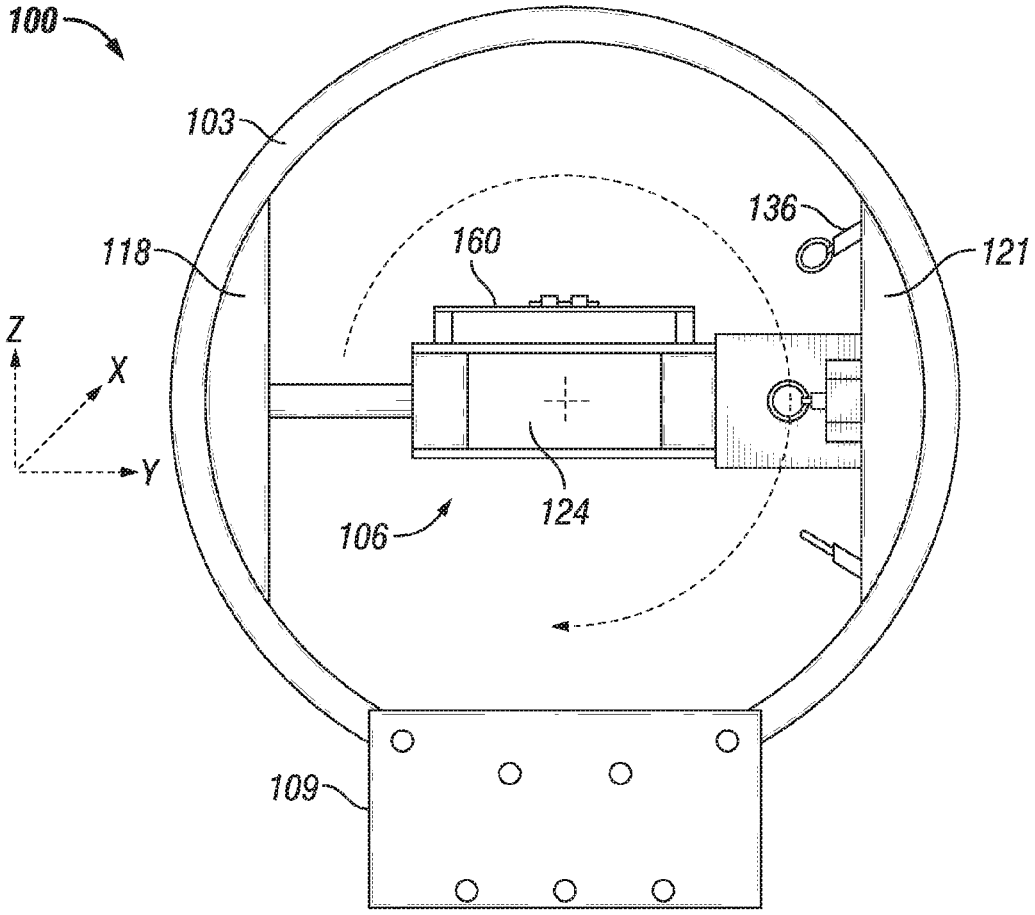

FIG. 7

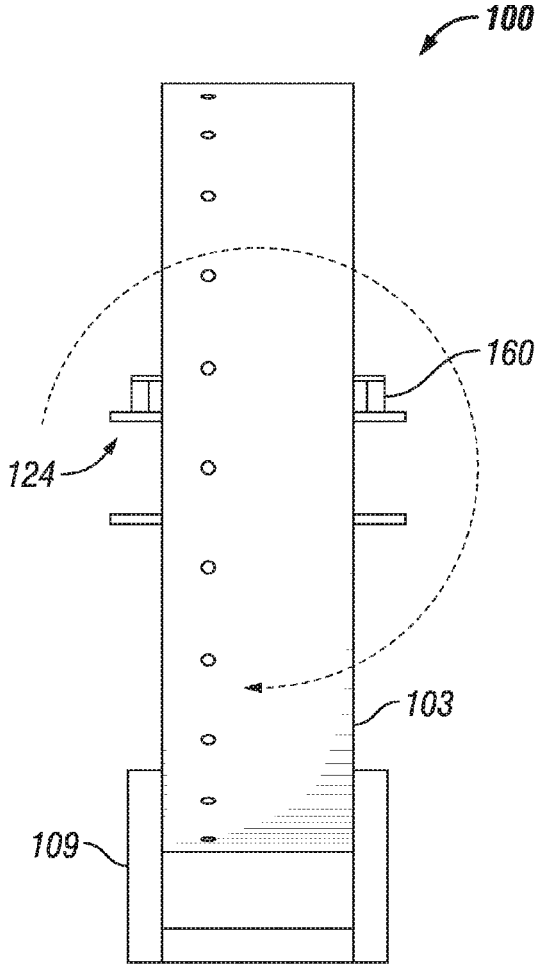

FIG. 8

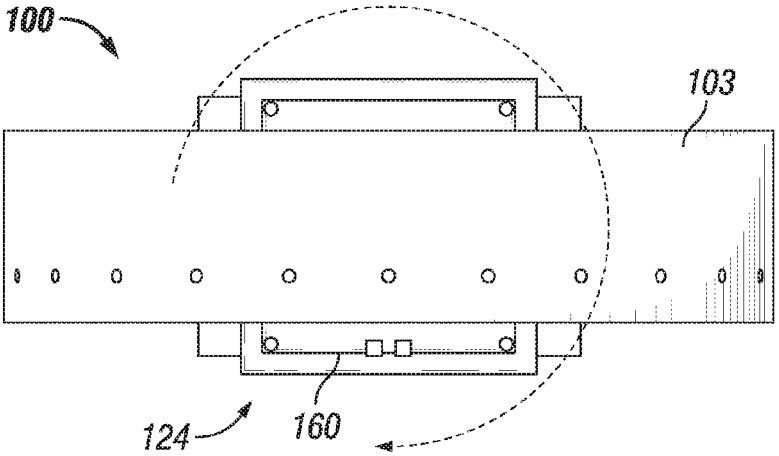

FIG. 9

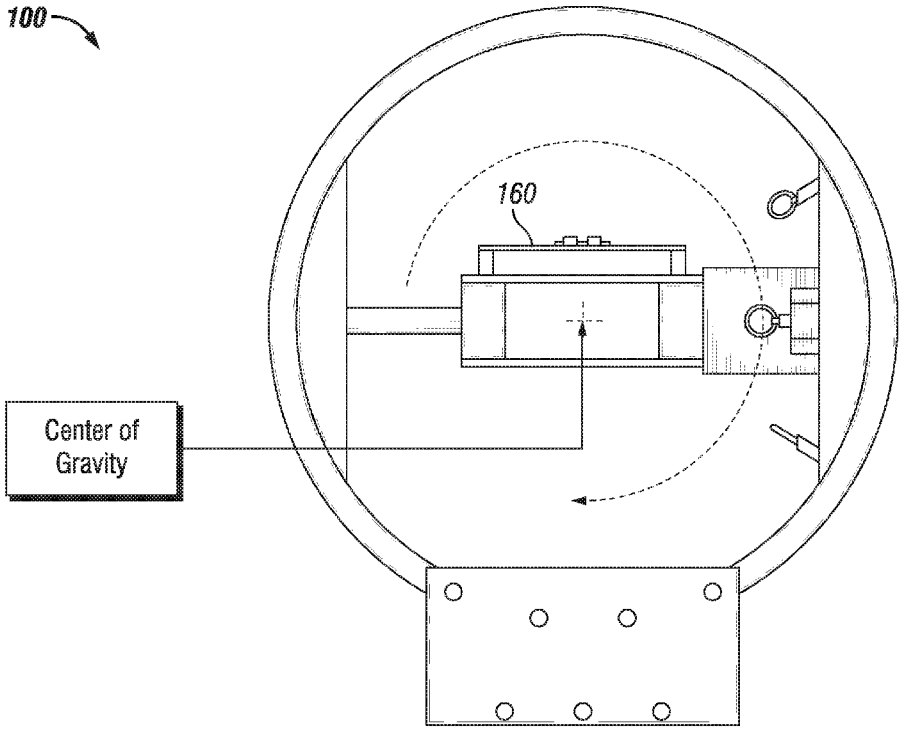

FIG. 10

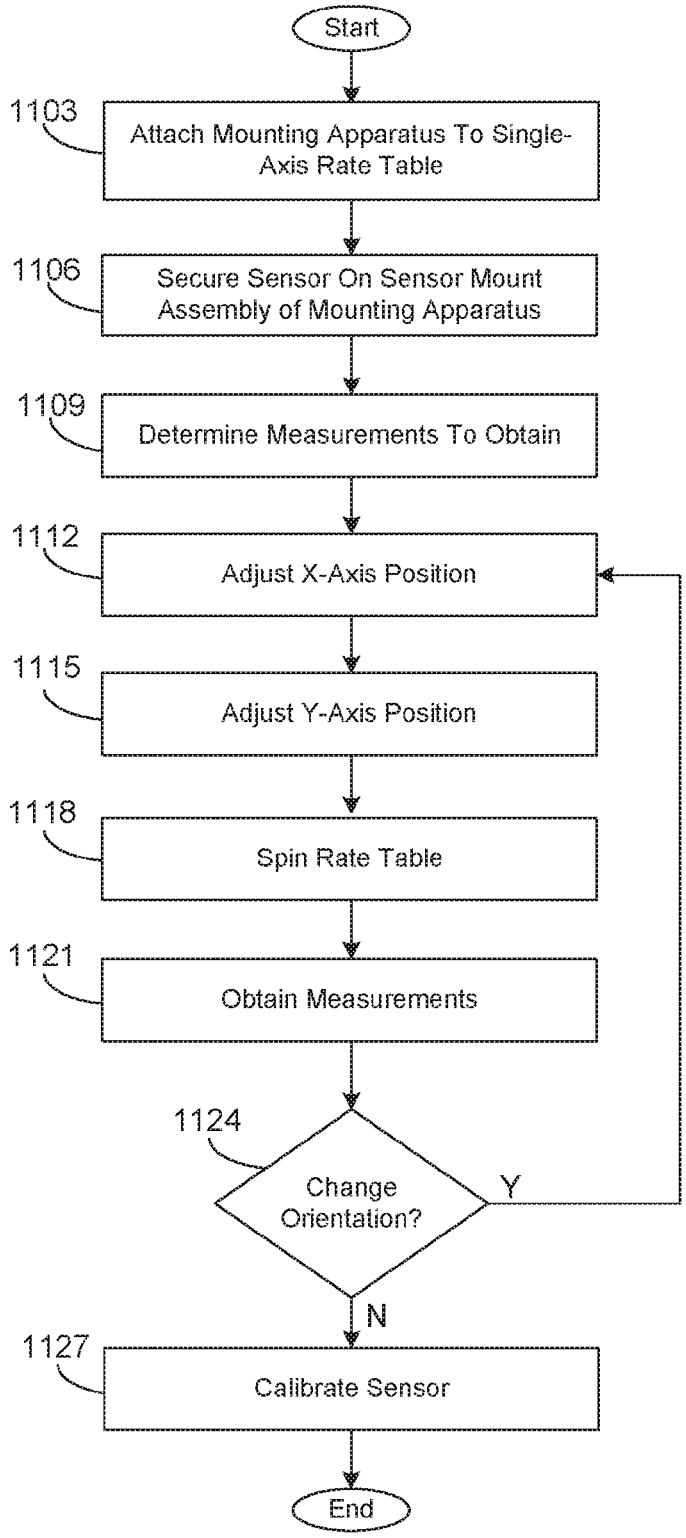
Start
1103
Attach Mounting Apparatus To Single-Axis Rate Table
1106
Secure Sensor On Sensor Mount Assembly of Mounting Apparatus
1109
Determine Measurements To Obtain
1112
Adjust X-Axis Position
1115
Adjust Y-Axis Position
1118
Spin Rate Table
1121
Obtain Measurements
1124
Change Orientation?
Y
N
1127
Calibrate Sensor
End

FIG. 11

APPARATUS FOR THREE-AXIS IMU CALIBRATION WITH A SINGLE-AXIS RATE TABLE

CROSS-REFERENCE TO RELATED APPLICATIONS

This application claims priority to U.S. Provisional Application No. 62/127,493 filed on Mar. 3, 2015 and entitled "APPARATUS FOR THREE-AXIS IMU CALIBRATION WITH A SINGLE-AXIS RATE TABLE," which is incorporated herein by reference in its entirety.

STATEMENT REGARDING FEDERALLY SPONSORED RESEARCH OR DEVELOPMENT

This invention was made with Government support under Contract/Grant No. NNX13AQ79A awarded by NASA. The Government has certain rights in this invention.

BACKGROUND

Inertial Measurement Units (IMUs) are sensor packages that typically contain three-axis gyroscopes and three-axis accelerometers to measure the change in acceleration and orientation of a vehicle or other object along different axes. A three-axis IMU measures the acceleration and rotation along all three axes. Three-axis IMUs are widely used in a variety of applications ranging from navigation, machining, robotics, industrial equipment, aerospace, defense, consumer electronics, and testing apparatus. In navigation applications, IMUs are used for GPS-denied and GPS-assisted navigation of manned and unmanned aircraft, spacecraft, and surface, marine, and underwater vehicles. For machining and for robotics applications, IMUs are used for tracking the motion of components and systems with respect to a reference frame. Several consumer electronics devices such as smartphones, gaming controllers and fitness products have incorporated IMUs for tracking motion. In addition, IMUs may be made for aerospace applications include tracking of satellites, missiles and other high-accuracy requirements. Accordingly, IMUs need to be calibrated to the desired level of accuracy since the IMU calibrations are critical for the effective practical use of an IMU. Such calibration requires the ability to stimulate the sensor with precisely controlled and repeatable inertial motion.

SUMMARY

Included are various embodiments of apparatuses and methods related to calibrating an IMU sensor package using a single-axis rate table. One embodiment of an apparatus, among others, includes a mounting apparatus for calibrating a three-axis IMU sensor package using a single-axis rate table, the mounting apparatus comprising a circular frame; an inner assembly slidably coupled to the circular frame and extending along a diameter of the circular frame, where the inner assembly is configured to secure the IMU sensor package, and rotation of the inner assembly about an inner circumference of the circular frame corresponds to an x-axis position of the IMU sensor package; and a bracket mount attached to a portion of the circular frame, the bracket mount being configured for mounting the mounting apparatus onto the single-axis rate table.

Another embodiment is a method, among others, that includes the following steps: attaching a mounting apparatus comprising a sensor to a single-axis rate table; adjusting an x-axis position of the sensor by rotating an inner assembly along a circumference of a circular frame of the mounting apparatus, the sensor being mounted to the inner assembly; adjusting a y-axis position of the sensor by rotating a portion of the inner assembly, the sensor being coupled to the portion of the inner assembly; spinning the single-axis rate table to generate z-axis rotation of the mounting apparatus and stimulating a combination of the x-axis, y-axis, and z-axis of the sensor based at least in part on the x-axis position, the y-axis position, and the z-axis rotation.

Another embodiment of an apparatus, among others, includes an apparatus for calibrating a three axis IMU sensor package on a single-axis rate table, the apparatus comprising: means for rotating the IMU sensor package along an x-axis; means for rotating the IMU sensor package along a y-axis; and means for mounting the IMU sensor package to the single-axis rate table, the rotation of the IMU sensor package coinciding with rotation of the single axis.

Other systems, methods, features, and advantages of the present disclosure will be or become apparent to one with skill in the art upon examination of the following drawings and detailed description. It is intended that all such additional systems, methods, features, and advantages be included within this description, be within the scope of the present disclosure, and be protected by the accompanying claims.

BRIEF DESCRIPTION OF THE DRAWINGS

Many aspects of the present disclosure can be better understood with reference to the following drawings. The components in the drawings are not necessarily to scale, emphasis instead being placed upon clearly illustrating the principles of the present disclosure. Moreover, in the drawings, like reference numerals designate corresponding parts throughout the several views.

FIG. **1** is a drawing of an example of a perspective view of a mounting apparatus according to various embodiments of the present disclosure.

FIG. **2** is a drawing of an example of another perspective view of the mounting apparatus of FIG. **1** according to various embodiments of the present disclosure.

FIG. **3** is a drawing of an example of a perspective view of the mounting apparatus of FIG. **1** where the inner assembly has been rotated about the x-axis and the y-axis according to various embodiments of the present disclosure.

FIG. **4**A is a drawing of an example of the first slide member of the mounting apparatus of FIG. **1** according to various embodiments of the present disclosure.

FIG. **4**B is a drawing of an example of the second slide member of the mounting apparatus of FIG. **1** according to various embodiments of the present disclosure.

FIG. **5** is a drawing of an example of a portion of the inner assembly of the mounting apparatus of FIG. **1** according to various embodiments of the present disclosure.

FIG. **6** is a drawing of an example of a perspective view of the mounting apparatus according to various embodiments of the present disclosure.

FIG. **7** is a drawing of an example of a front view of the mounting apparatus of FIG. **1** showing the rotation along the x-axis according to various embodiments of the present disclosure.

FIG. **8** is a drawing of an example of a side view of the mounting apparatus of FIG. **1** showing the rotation along the y-axis according to various embodiments of the present disclosure.

FIG. **9** is a drawing of an example of a top view of the mounting apparatus of FIG. **1** showing the rotation along the z-axis according to various embodiments of the present disclosure.

FIG. **10** is a drawing of an example of a front view of the mounting apparatus of FIG. **1** showing the center of gravity according to various embodiments of the present disclosure.

FIG. **11** is a flowchart illustrating one example of a method of calibrating an IMU sensor package using the mounting apparatus of FIGS. **1** and **6** according to various embodiments of the present disclosure.

DETAILED DESCRIPTION

Disclosed herein are various embodiments of apparatuses and methods related to calibrating a three-axis inertial measurement unit (IMU) using a single-axis rate table for repeatable calibrations at different orientations with minimal user intervention. Specifically, disclosed herein is a mounting apparatus for the IMU sensor package that allows for the adjustment of the orientation along all three-axis without removal of the sensor package. In various embodiments, the mounting apparatus can be mounted onto a single-axis rate table to perform repeatable calibration of all three axes of the IMU, thereby reducing the cost and size of a typical three-axis IMU calibration apparatus. Further, according to various embodiments of the present disclosure, the mounting apparatus can place an IMU sensor package in different, repeatable orientations, such that a three-axis calibration may be performed using only a single-axis rate table.

There are several known methods for calibrating multi-axis IMUs. One known method of calibrating three-axis IMUs is by using a two-axis or three-axis rate table where multi-axis motion profiles may be reconstructed accurately. By using this method, all axes can be properly measured or spun during calibration simultaneously. Simultaneously stimulating the IMU along all three axes can yield information about errors between axes. This method is fast because a single programmed run of a multi-axis table can yield all the necessary measurements needed for a proper calibration. As such, this method is capable of calibrating the error between the axes, and improving the speed of the calibration by providing all the necessary calibration measurements in just a few programmed movements. However, these benefits come at a significant cost due to the substantial price difference between the cost of a three-axis rate table and the cost of a single-axis rate table. Other disadvantages include the cost of programming precise motion profiles and the extra lab space needed for a multi-axis rate table.

Another method of calibrating an IMU is to use a six-point tumble test where the sensor package is mounted on a leveled surface along each of the three axes alternately pointing up and down. Specifically, calibrating the IMU with this method involves placing the IMU in six different positions (each axis pointing up and down while spinning on a single axis rate table). For example, a user may place the IMU on the single-axis rate table with the x-axis pointing up, spin the IMU at a known rate, and collect the corresponding measurements. Next, the IMU is flipped 180 degrees with the x-axis pointing down, and the rate-table is spun once again to collect measurements at the new position. This process is repeated two more times (four more measurements) for the other two axes (y and z). As can be observed, the IMU must be physically handled during the calibration and flipping the axis at an exact 180 degrees can be quite troublesome. Because this calibration does not yield angled measurements, no information can be taken about errors between axes (misalignment and non-orthogonality errors). Therefore, a separate calibration must be performed to estimate these errors. As such, this calibration method is not only time-consuming, but also non-repeatable.

Another known way to calibrate a three-axis IMU is by mounting the sensor package at different angles on a single-axis rate table to calibrate the error between the axes. This is analogous to the six-point tumble test with some additional intermediate points to provide information on the error between the axes. In one implementation of this technique, angled blocks may be used for changing the mounting angle. However, the drawbacks of this method are the cost of machining angled blocks of different sizes, the repeatability of measurements as a result of remounting the sensor for every angle, and the time to change the blocks between measurements. In addition, the use of angled brackets may cause additional issues such as, for example, noticeable play in adjustments leading to repeatability issues, non-repeatable positions due to imprecise adjustments, a need for special tools for the adjustments, and inability for z-axis adjustments without removal of the sensor.

The present disclosure overcomes the limitations of the previously mentioned techniques. The key advantages of the mounting apparatus and methods disclosed herein as opposed to other single-axis rate table techniques are repeatability, cost, time, ease of repositioning, and minimization of user intervention. Further, the main advantages of the present disclosure with respect to using multi-axis rate tables is a large reduction in the cost and size of equipment and an elimination of the need for programming complicated motion profiles.

Reference will now be made in detail to the description of the embodiments as illustrated in the drawings, wherein like reference numbers indicate like parts throughout the several views.

Referring now to FIG. **1**, shown is an example of a drawing of a perspective view of a mounting apparatus **100** according to various embodiments of the present disclosure. The mounting apparatus **100** comprises a circular frame **103**, an inner assembly **106**, and a table mounting bracket **109**. In various embodiments, the circular frame **103** can be ring-shaped having an inner surface and an outer surface. The circular frame **103** further comprises an inner guide slot **112** recessed along the circumference of the inner surface of the circular frame **103** and a plurality of x-rotation holes **115** spaced along the circumference of the circular frame **103** and extending from the outer surface to the inner surface of the circular frame **103**. The x-rotation holes **115** are configured to allow for rotation of the inner assembly **106** along the x-axis. In some embodiments, the x-rotation holes are uniformly spaced along the circumference of the circular frame **103**. For example, the x-rotation holes **115** may be spaced at fifteen degree increments, twenty degree increments, and/or any other variation of incremental spacing along the circumference of the circular frame **103**. In other embodiments, the spacing of the x-rotation holes **115** along the circumferences of the circular frame **103** may be non-uniformly spaced.

In some embodiments, the inner assembly **106** can be slidably attached to the inner surface of the circular frame **103** extending along the diameter of the inner surface of the circular frame **103**. In various embodiments, the inner assembly **106** comprises a first slide member **118**, a second slide member **121**, a sensor mount assembly **124**, and a y-axis assembly **127**. The first slide member **118** and the second slide member **121** are positioned at opposing ends of the inner assembly **106**. Accordingly, when the first slide

member **118** is positioned along one portion of the inner surface of the circular frame **103**, the second slide member **121** is positioned along an opposite portion of the inner surface of the circular frame **103**.

In some embodiments, the first slide member **118** and the second slide member **121** are semi-circle shaped and comprise a convex surface and a substantially flat surface. The convex surface is shaped to follow the curvature of the inner surface of the circular frame **103**. In other embodiments, the first slide member and the second slide member **121** may comprise other shapes (e.g., rectangular, square, circular, etc.) so long as the first slide member **118** and second slide member **121** comprise a surface shaped to move along the interior circumference of the circular frame **103** as can be appreciated.

The first slide member **118** and the second slide member **121** each comprise a male slot **130** (FIGS. **4**A and **4**B) extending outwardly from the respective convex surface such that the male slot **130** on each slide member **118**,**121** engages with the inner guide slot **112** recessed within the inner surface of the circular frame **103**. Once engaged with the inner guide slot **112**, the first slide member **118** and the second slide member **121** can move along the interior circumference of the circular frame **103**.

In various embodiments, the first slide member **118** and the second slide member **121** can each comprise one or more x-mounting holes **133** (FIGS. **4**A and **4**B) for placement of one or more x-mounting pins **136** used to secure the respective slide member **118**, **121** to a desired position along the circular frame **103**. The x-mounting holes **133** are configured to align with a respective x-rotation hole **115** such that a respective x-mounting pin **136** may be inserted into a respective x-mounting hole **133** and through a respective x-rotation hole **115** to secure placement of the respective slide member **118**, **121** to the circular frame **103**. The one or more x-mounting pins **136** may comprise a locking pin and/or any other suitable connector that can be used to secure placement of the first slide member **118** and/or the second slide member **121** to the circular frame **103**. Accordingly, rotation of the inner assembly **106** along the x-axis is capable via the adjustments and placement of the first slide member **118** and the second slide member **121** along the inner surface of the circular frame **103**. In some embodiments, a respective x-mounting pin **136** may be used to secure both the first slide member **118** and the second slide member **121**. In other embodiments, the one or more x-mounting pins **136** are inserted into either the first slide member **118** or the second slide member **121**.

The second slide member **121** differs from the first slide member **118** in that the second slide member **121** further comprises a plurality of y-rotation holes **139** disposed in a circular configuration on the substantially flat portion of the second slide member **121**. In some embodiments, the plurality of y-rotation holes **139** are evenly spaced in a circular configuration. For example, while the y-rotation holes **139** are spaced at about fifteen degree increments in FIG. **1**, the degree increments between the y-rotation holes **139** may be spaced at greater or lesser degrees. In other embodiments, the y-rotation holes **139** are not spaced evenly. The y-rotation holes **139** are disposed along the second slide member **121** to allow for rotation of the sensor mount assembly **124** along the y-axis.

The first slide member **118** is connected to a first end of the sensor mount assembly **124** via a shaft **142** extending outwardly from and substantially perpendicular to the substantially flat surface of the first slide member **118**. The shaft **142** comprises a first end connected to the first slide member **118** and a second end that is coupled to the sensor mount assembly **124** via a first ball bearing **145** that allows for rotation of the sensor mount assembly **124** about the y-axis of the shaft **142**.

The sensor mount assembly **124** comprises a top plate **148**, a bottom plate **151**, a first side **154**, and a second side **157**. The top plate **148** is configured to secure the IMU sensor package **160** to the sensor mount assembly **124**. The IMU sensor package **160** may be connected to the top plate **148** by brackets, screws, an adhesive, and/or any other appropriate type of connector to securely mount the IMU sensor package **160** to the top plate **148**. The bottom plate **151** is positioned substantially parallel and below the top plate **148**. Although the top plate **148** and the bottom plate **151** of the sensor mount assembly **124** of FIG. **1** are shown as being rectangular-shaped, the shapes of the top plate **148** and the bottom plate **151** may be circular, triangular, pentagonal, octagonal and/or any other appropriate type of shape. Further, the size and shape of the sensor mount assembly **124** of FIG. **1** may be customized for different shaped and sized IMU sensor packages **160**.

The first side **154** of the sensor mount assembly **234** is disposed between the top plate **148** and the bottom plate **151** and comprises a first ball bearing **145** that is disposed along the second end of the shaft **142** extending from the first slide member **118**. The second side **157** of the sensor mount assembly **124** is opposite of the first side of the sensor mount assembly **124** and disposed between the top plate **148** and the bottom plate **151**.

The y-axis assembly **127** is disposed between the second side **157** of the sensor mount assembly **124** and the second slide member **121**. In some embodiments, the y-axis assembly **127** comprises a first member **163** coupled to a second member **166**. In some embodiments, the y-axis assembly **127** is t-shaped configuration. The first member **163** of the y-axis assembly **127** is coupled to the second side **157** of the sensor mount assembly **124**. The second member **166** of the y-axis assembly **127** is rotationally coupled to the substantially flat surface of the second slide member **121** via a second ball bearing **169** such that the second member **166** can rotate along the y-axis in a full 360 degree rotation. The second member **166** of the y-axis assembly **127** comprises a y-mounting hole **172** that is configured to align with a respective y-rotation hole **139** of the second slide member **121**. The position of the second member **166** along the y-axis is secured in place by a y-mounting pin **175** inserted in the y-mounting hole **172** and into the respective y-rotation hole **139** of the second slide member **121**.

According to various embodiments, when the y-mounting pin **175** is removed and/or unlocked, the y-axis assembly **127** (and sensor mount assembly **124**) may be rotated along the y-axis in a full 360 degree rotation. The y-mounting pin **175** may comprise a locking pin and/or any other connector that can secure the position of the y-axis assembly **127** along the y-axis. Accordingly, the position of the y-axis assembly **127** along the y-axis can be rotated along the y-axis based at least in part on a respective y-mounting hole **172** location. In addition, the one or more x-mounting pins **136** and the y-mounting pin **175** are independent from one another, adding to the versatility of the mounting apparatus **100**.

The table mount bracket **109** is coupled to a portion of the circular frame **103**. The table mount bracket **109** may comprise one or more side brackets **178** (e.g., **178***a*, **178***b*) coupled to at least one side of the portion of the circular frame **103**. The table mount bracket **109** may further comprise a bottom bracket **181** (FIG. **2**) disposed between the one or more side brackets **178**. The bottom bracket **181** may

be used to mount the mounting apparatus **100** to a single-axis rate table (not shown). The size and shape of the table mount bracket **109** may be customized for various types of rate tables. The rotation of the mounting apparatus **100** about the z-axis coincides with rotation along the axis of the rate table.

When assembled, the mounting apparatus **100** may be used to adjust the position of a mounted IMU sensor package **160** at various orientations along the three axes to allow for three-axis calibration. For example, using the configuration shown in FIG. **1**, the x-rotation holes **115** are uniformly spaced every fifteen degrees to allow for rotation of the inner assembly **106** to twenty-four discrete positions along the full 360 degree orientation along the x-axis using the x-mounting pins **136** that are inserted through respective x-mounting holes **133** in the first slide member **118** and/or the second slide member **121** into the one or more x-rotation holes **115** of the circular frame **103**.

In the configuration shown in FIG. **1**, the y-rotation holes **139** are uniformly spaced at fifteen degree increments to allow for rotation of the inner assembly **106** to twenty-four discrete positions along the full 360 degree orientation along the y-axis. Specifically, the orientation of the sensor mount assembly **124** along the y-axis may be rotated and secured by aligning the y-mounting hole **172** with a respective y-rotation hole **139** and inserting the y-mounting pin **175** through the y-mounting hole **172** and respective y-rotation hole **139**. In one non-limiting example, using the example configuration as shown in FIG. **1**, the mounting apparatus **100** of FIG. **1** allows for 576 unique orientations at fifteen degree increments along the three axes.

In some embodiments of the mounting apparatus, the x-axis and y-axis orientations are adjusted manually. In other embodiments, the mounting apparatus **100** may further comprise one or more motor devices (not shown) and/or controller devices (not shown) that are configured to automatically adjust the x-axis orientation and/or the y-axis orientation as can be appreciated. For example, the inner assembly **106** may comprise a motor, a controller, and/or other appropriate devices that allow for the inner assembly **106** to automatically change orientation by automatically aligning the x-mounting holes **133** with respective x-rotation holes **115** and secure the position by automatically inserting a x-mounting pin **136** through the x-mounting holes **133** and into the x-rotation holes **115**. Similarly, the y-axis orientation of the sensor mount assembly **124** may be adjusted automatically as can be appreciated.

Turning now to FIG. **2**, shown is an example of a drawing of another perspective view of the mounting apparatus **100** according to various embodiments of the present disclosure. In FIG. **2**, the inner assembly **106** is secured to the circular frame **103** via the one or more x-mounting pins **136** inserted into the x-mounting holes **133** of the second slide member **121**. In addition, the y-axis assembly **127** is secured to a specific position along the y-axis defined by the y-mounting pin **175** being inserted into the y-mounting hole **172** at a respective y-rotation hole **139***a* on the second slide member **121**.

In FIG. **2**, the bottom plate **151** of the sensor mount assembly **124** is shown. In some embodiments, the bottom plate **151** may comprise at least one tapped hole **201** configured to receive one or more weights that may be used to compensate for sensor weight to maintain the appropriate center of gravity. FIG. **2** also shows the bottom bracket **181** of the table mounting bracket **109**. As previously noted, the bottom bracket **181** may be customized for mounting onto a variety of rate tables.

Moving on to FIG. **3**, shown is an example of a drawing of another perspective view of the mounting apparatus **100** where the inner assembly **106** has been rotated according to various embodiments of the present disclosure. In FIG. **3**, the position of the sensor mount assembly **124** along the x-axis and y-axis has been rotated from the position shown in FIGS. **1** and **2**. Specifically, the inner assembly **106** is secured in place at different x-rotation holes **115** on the circular frame **103**. In changing the orientation along the x-axis, the x-mounting pins **136** were removed and the inner assembly was repositioned along the x-axis by sliding the first slide member **118** and the second slide member **121** along the inner guide slot **112** so that the x-mounting holes **133** are aligned with the appropriate x-rotation holes **115**. According to various embodiments, the x-mounting holes **133** of the first slide member **118** and the second slide member **121** are aligned with respective x-rotation holes **115** of the circular frame **103**. Accordingly, the x-axis position of the inner assembly **106** is secured in place on the circular frame **103** via the one or more x-mounting pins **136** being inserted through both the x-mounting holes **133** and the respective x-rotation holes **115**.

In FIG. **3**, the orientation of the sensor mount assembly **124** along the y-axis has also been rotated from the orientation shown in FIGS. **1** and **2**. To modify the orientation of the sensor mount assembly **124** along the y-axis as shown in FIG. **3**, the y-mounting pin **175** may be removed to allow rotation of the y-axis assembly **127** along the y-axis. During rotation, the y-mounting hole **172** may be aligned with a different y-rotation hole **139**. The new orientation is secured by use of the y-mounting pin **175** which is inserted into the y-mounting hole **172** and the different y-rotation hole **139**.

Turning now to FIGS. **4**A and **4**B, shown are examples of drawings of the convex surface of the first slide member **118** and the convex surface of the second slide member **121** according to various embodiments of the present disclosure. As shown in FIG. **4**A, the first slide member **118** of inner assembly **106** comprises the male slot **130** for engaging with the inner guide slot **112** (FIG. **1**) of the circular frame **103** (FIG. **1**) of the mounting apparatus **100**. FIG. **4**B illustrates the male slot **130** on the second slide member **121**. In addition, FIG. **4**B shows the plurality of y-rotation holes **139** in a circular configuration.

Referring next to FIG. **5**, shown is an example of a drawing of a perspective view of a portion of inner assembly **106** of the mounting apparatus **100** according to various embodiments of the present disclosure. FIG. **5** illustrates the y-axis assembly **127** coupled to the sensor mount assembly **124**. To allow for smooth rotation along the y-axis, the inner assembly **106** comprises a first ball bearing **145** (FIG. **1**) and a second ball bearing **169**. In various embodiments, the first ball bearing **145** may be disposed between the shaft **142** extending from the first slide member **118** and the first side **154** of the sensor mount assembly **124**. In various embodiments, the second ball bearing **169** can protrude outwardly from the outer surface of the second member **166** of the y-axis assembly **127**. According to various embodiments, the y-axis assembly **127** can be coupled to the second slide member **121** via the second ball bearing **169**.

Moving on to FIG. **6**, shown is an example of a drawing of a perspective view of the mounting apparatus **100** according to various embodiments of the present disclosure. The mounting apparatus **100** shown in FIG. **6** differs from the mounting apparatus **100** shown in FIG. **1** according to how the inner assembly **106** rotates along the x-axis of the mounting apparatus **100**. The mounting apparatus **100** of FIG. **6** comprises a circular frame **103**, an inner assembly

106, and a table mount bracket 109. According to various embodiments, the circular frame 103 is ring-shaped comprising an inner surface and an outer surface. A ring-shaped track 602 is coupled to and extends outwardly from to the inner surface of the circular frame 103. The ring-shaped track 602 is positioned along the entire circumference of the inner surface of the circular frame 103. The ring-shaped track 602 comprises a plurality of x-rotation holes 115 spaced along the side portions of the ring-shaped track 602. In some embodiments, the x-rotation holes 115 are evenly spaced (e.g., 15 degree iterations, etc.). In other embodiments, the x-rotation holes 115 are not evenly spaced.

The inner assembly 106 of FIG. 6 differs from the inner assembly 106 of FIG. 1 in that the first slide member 118 and the second slide member 121 each comprise a respective slot 604 recessed within the convex surface of the first slide member 118 and the second slide member 121 and extending from a respective top surface to a respective bottom surface. Accordingly, the respective slots 604 of the first slide member 118 and the second slide member 121 are engaged with the ring-shaped track 602 on the circular frame 103. In addition, the first slide member 118 and the second slide member 121 of FIG. 6 each comprise one or more x-mounting holes 133 extending from a respective first side to a respective second side of the respective slide member 118, 121. In various embodiments, the x-mounting holes 133 can be aligned with a respective x-rotation hole 115 of the ring-shaped track 602. Accordingly, the one or more x-mounting pins 136 can be inserted within the one or more x-mounting holes 133 and respective x-rotation holes 115 to secure the position of the inner assembly 106 along the circular frame 103.

The table mount bracket 109 is coupled to a portion of the circular frame. The table mount bracket 109 may comprise one or more side brackets 178 coupled to at least one side of the portion of the circular frame 103. The table mount bracket 109 may further comprise a bottom bracket 181 (FIG. 2) disposed between the one or more side brackets 178. The bottom bracket 181 may be used to mount the mounting apparatus 100 to a single-axis rate table (not shown). The size and shape of the table mount bracket 109 may be customized for various types of rate tables as can be appreciated. The rotation of the mounting apparatus 100 about the z-axis coincides with the rotation of the rate table.

Turning now to FIG. 7, shown is an example of a front view of the mounting apparatus 100 illustrating a rotation of the inner assembly 106 along the x-axis according to various embodiments of the present disclosure. To rotate the inner assembly 106, and thus, the sensor mount assembly 124, about the x-axis of the mounting apparatus 100, the one or more x-mounting pins 136 securing the inner assembly 106 to a particular position along the circular frame 103 may be unlocked and/or removed. If there are multiple x-mounting pins 136, all of the x-mounting pins 136 must be unlocked and/or removed from the x-rotation holes 115 before rotation along the x-axis is possible. In one non-limiting example, the x-rotation holes 115 may be spaced every fifteen degrees in the configuration, as shown in FIG. 1. In this non-limiting configuration, the mounting apparatus 100 of FIG. 1 is capable of locking in positions along the x-axis at every fifteen degrees for a full rotation of 360 degrees. However, as previously noted, the configuration of the x-rotation holes 115 is not limited to fifteen degree increments. As such, there may be more or less than twenty-four x-rotation holes 115 along the circular frame 103.

To allow for rotation along the x-axis, the respective male slots 130 (FIGS. 4A-4B) on the first slide member 118 and the second slide member 121 of the inner assembly 106 may mate with the inner guide slot 112 (FIG. 1) and slide along the circumference of the circular frame 103 via the inner guide slot 112. In some embodiments, the inner guide slot 112 can be greased to allow for ease of rotation along the x-axis. The inner guide slot 112 can limit rotation of the inner assembly 106 along any other axis (e.g., y-axis, z-axis) when rotating along the x-axis. In addition, the inner guide slot 112 holds the inner assembly 106 in the circular frame 103 during testing. It should be noted that while the mounting apparatus 100 of FIG. 1 and the mounting apparatus 100 of FIG. 6 differ in structure for rotating along the x-axis, the rotation along the x-axis is the same.

Referring next to FIG. 8, shown is an example of a drawing of a side view of the mounting apparatus 100 illustrating a rotation of the sensor mount assembly 124 along the y-axis of the mounting apparatus 100 according to various embodiments of the present disclosure. Rotation about the y-axis of the mounting apparatus 100 occurs by removing and/or unlocking the y-mounting pin 175 and rotating the y-axis assembly 127 (and sensor mount assembly 124) to align the y-mounting hole 172 with a different y-rotation hole 139. When the desired alignment is reached, the y-mounting pin 175 can be inserted into the y-mounting hole 172 and the different y-rotation hole 139 to secure the position. For the configuration shown in FIG. 1 where the y-rotation holes 139 are spaced at fifteen degree increments, the y-axis assembly 127 (and sensor mount assembly 124) may be rotated along the y-axis every fifteen degrees for a full 360 degree rotation. To allow for smooth rotation in y-axis, a first ball bearing 145 and a second ball bearing 169 may be used in the assembly of the inner assembly 106 as discussed with respect to FIGS. 1 and 5. It should be noted that while the mounting apparatus 100 of FIG. 1 and the mounting apparatus 100 of FIG. 6 differ in structure for rotating along the x-axis, the rotation along the y-axis is the same.

Turning now to FIG. 9, shown is an example of a drawing of a top view of the mounting apparatus 100 illustrating rotation of the mounting apparatus 100 along the z-axis of the mounting apparatus 100 according to various embodiments of the present disclosure. The z-axis rotation is stimulated by the rotation of a rate table (not shown) attached to the mounting apparatus 100. When the rate table is spun at a known rate, the entire mounting apparatus 100 will begin spinning counter-clockwise or clockwise as shown in FIG. 9. It should be noted that while the mounting apparatus 100 of FIG. 1 and the mounting apparatus 100 of FIG. 6 differ in structure for rotating along the x-axis, the rotations along the y-axis and z-axis are the same.

Moving on to FIG. 10, shown is an example of a front view of the mounting apparatus 100 of FIG. 1 according to various embodiments of the present disclosure. An important component of the mounting apparatus 100 is the center of gravity (CG) of the mounting apparatus. The CG must be kept very near the axis of rotation of the rate table. If the CG is not near the axis of rotation there is a moment arm that may cause wobble during testing. Any wobble or vibrations in the table are unwanted and may corrupt sensor calibration. The CG is shown in FIG. 10 by the cross shown between the top plate 148 (FIG. 1) and the bottom plate 151 (FIG. 1) of the sensor mount assembly 124 of the mounting apparatus 100. The CG is about 0.1" to the right of the center of rotation. In order to prevent the sensor package 160 (FIG. 1) coupled to the sensor mount assembly 124 from wobbling during rotation, the center of gravity of the mounting apparatus 100 may be adjusted using balancing weights (not

shown) for alignment with the axis of rotation of the rate table. In some embodiments, a small tapped hole **201** (FIG. **1**) on the bottom plate **151** of the sensor mount assembly **124** can be configured to receive small weights to compensate for the sensor weight.

Moving on to FIG. **11**, shown is a flowchart that provides one example of a method for calibrating a mounting apparatus **100** mounted on a single-axis rate table (not shown). It is understood that the flowchart of FIG. **11** provides merely an example of the many different types of functional arrangements that may be employed to implement the operation of the methods as described herein.

At reference numeral **1103**, the mounting apparatus **100** is mounted onto a single-axis rate table. The mounting apparatus **100** may be mounted onto the single-axis rate table via the table mounting bracket **109** and any appropriate hardware required to secure the table mounting bracket **109** of the mounting apparatus **100** on the single-axis rate table. At reference numeral **1106**, the IMU sensor package **160** (FIG. **1**) is secured on the sensor mount assembly **124** (FIG. **1**) of the mounting apparatus **100**. At reference numeral **1109**, the required measurements to obtain are determined. The measurements may comprise x-axis accelerometer measurements, y-axis accelerometer measurements, z-axis accelerometer measurements, x-axis gyroscope measurements, y-axis gyroscope measurements, z-axis gyroscope measurements, sensor temperature, and/or any other type of measurement as can be appreciated. The required measurements may be determined arbitrarily or may be determined based on previous measurements, a predetermined set of orientations, a particular need, etc. At reference numeral **1112**, the x-axis position of the sensor package **160** is adjusted according to a desired position for a desired measurement. Accordingly, if the one or more x-mounting pins **136** are inserted to the x-mounting holes **133** and the respective x-rotation holes **115**, the one or more x-mounting pins **136** are removed and/or unlocked. The inner assembly **106** is rotated to the desired position such that the x-mounting holes **133** on the first slide member **118** and/or the second slide member **121** are aligned with the desired x-rotation holes **115** of the circular frame **103** of the mounting apparatus **100**. Once proper alignment has occurred, the one or more x-mounting pins **136** are inserted into the one or more x-mounting holes **133** and desired x-rotation holes **115** to secure the new position along the x-axis.

At reference numeral **1115**, the y-axis position of the sensor package **160** is adjusted according to a desired measurement. If the y-mounting pin **175** is inserted in the y-mounting hole **172** and a respective y-rotation hole **139**, the y-mounting pin **175** is removed and/or unlocked. Then the y-axis assembly **127**, and thus the sensor mount assembly **124** holding the sensor package **160**, is rotated to align the y-mounting hole **172** with the desired y-rotation hole **139**. Once aligned, the y-mounting pin **175** is inserted into the y-mounting hole **172** and the desired y-rotation hole **139** to secure the desired y-axis position of the sensor package **160**.

At reference numeral **1118**, the rate table is spun. The z-axis rotation of the mounting apparatus **100** coincides with the rotation of the rate table. At reference numeral **1121**, the measurements are obtained that correspond to the configured orientation of the sensor package **160**. At reference numeral **1124**, it is determined whether the orientation is to be changed to obtain additional measurements. If measurements at an alternate orientation are desired, the method may proceed to reference numeral **1112**. At reference numeral **1127** the sensor package **160** may be calibrated according to the obtained measurements.

Although the flowchart of FIG. **11** shows a specific order of execution, it is understood that the order of execution may differ from that which is depicted. For example, the order of execution of two or more steps may be scrambled relative to the order shown. Also, two or more steps shown in succession in FIG. **11** may be executed concurrently or with partial concurrence. Further, in some embodiments, one or more of the blocks shown in FIG. **11** may be skipped or omitted. It is understood that all such variations are within the scope of the present disclosure.

It should be emphasized that the above-described embodiments of the present disclosure are merely possible examples of implementations set forth for a clear understanding of the principles of the disclosure. Many variations and modifications may be made to the above-described embodiment(s) without departing substantially from the spirit and principles of the disclosure. All such modifications and variations are intended to be included herein within the scope of this disclosure and protected by the following claims.

It should be noted that ratios, concentrations, amounts, and other numerical data may be expressed herein in a range format. It is to be understood that such a range format is used for convenience and brevity, and thus, should be interpreted in a flexible manner to include not only the numerical values explicitly recited as the limits of the range, but also to include all the individual numerical values or sub-ranges encompassed within that range as if each numerical value and sub-range is explicitly recited. To illustrate, a concentration range of "about 0.1% to about 5%" should be interpreted to include not only the explicitly recited concentration of about 0.1 wt % to about 5 wt %, but also include individual concentrations (e.g., 1%, 2%, 3%, and 4%) and the sub-ranges (e.g., 0.5%, 1.1%, 2.2%, 3.3%, and 4.4%) within the indicated range. The term "about" can include traditional rounding according to significant figures of numerical values. In addition, the phrase "about 'x' to 'y'" includes "about 'x' to about 'y'".

Therefore, at least the following is claimed:

1. A mounting apparatus for calibrating a sensor package using a single-axis rate table, the mounting apparatus comprising:

a circular frame;

an inner assembly slidably coupled to the circular frame and extending along a diameter of the circular frame, the inner assembly being configured to secure the sensor package, and rotation of the inner assembly about an inner circumference of the circular frame corresponding to an x-axis position of the sensor package; and

a bracket mount attached to a portion of the circular frame, the bracket mount being configured for mounting the mounting apparatus onto the single-axis rate table.

2. The mounting apparatus of claim **1**, wherein the circular frame comprises a plurality of x-rotation holes positioned around the inner circumference of the circular frame.

3. The mounting apparatus of claim **2**, wherein the plurality of x-rotation holes are uniformly spaced along the inner circumference of the circular frame.

4. The mounting apparatus of claim **2**, wherein a position of the inner assembly along the circular frame is based at least in part on one or more of the plurality of x-rotation holes, the inner assembly being secured to the circular frame

at the position via one or more x-mounting pins inserted into one or more x-mounting holes on the inner assembly aligned with the one or more of the plurality of x-rotation holes, the one or more x-mounting pins extending into the one or more of the plurality of x-rotation holes.

5. The mounting apparatus of claim **1**, wherein the rotation of the mounting apparatus about a z-axis coincides with rotation of the single-axis rate table.

6. The mounting apparatus of claim **1**, wherein the inner assembly comprises a first slide member and a second slide member, the first slide member being slidably coupled to the circular frame at a first location and the second slide member being slidably coupled to the circular frame at a second location, the first location being opposite of the second location.

7. The mounting apparatus of claim **6**, wherein the inner assembly further comprises a sensor mount assembly coupled to a y-axis assembly, the y-axis assembly being rotationally coupled to the second slide member.

8. The mounting apparatus of claim **7**, wherein a y-axis rotation of the sensor package corresponds to a rotation of the y-axis assembly about the second slide member.

9. The mounting apparatus of claim **7**, wherein the second slide member comprises a plurality of y-rotation holes spaced in a circular configuration, wherein a y-axis orientation of the sensor mount is based at least in part on an alignment of a y-mounting hole on the y-axis assembly with a respective y-rotation hole.

10. The mounting apparatus of claim **1**, wherein the sensor comprises a three-axis Inertial Measurement Unit (IMU) sensor package.

11. A method, comprising:

attaching a mounting apparatus comprising a sensor to a single-axis rate table;

adjusting an x-axis position of the sensor by rotating an inner assembly along a circumference of a circular frame of the mounting apparatus, the sensor being mounted to the inner assembly;

adjusting a y-axis position of the sensor by rotating a portion of the inner assembly, the sensor being coupled to the portion of the inner assembly; and

spinning the single-axis rate table to generate z-axis rotation of the mounting apparatus and stimulating a combination of the x-axis, y-axis, and z-axis of the sensor based at least in part on the x-axis position, the y-axis position, and the z-axis rotation.

12. The method of claim **11**, further comprising obtaining one or more measurements from the sensor corresponding to the x-axis position, the y-axis position, and the z-axis rotation of the mounting apparatus.

13. The method of claim **12**, wherein the one or more measurements comprise at least one of an x-axis accelerometer measurement, a y-axis accelerometer measurement, a z-axis accelerometer measurement, an x-axis gyroscope measurement, a y-axis gyroscope measurement, a z-axis gyroscope measurement, or a sensor package temperature measurement.

14. The method of claim **11**, wherein the inner assembly is slidably coupled to an inner surface of the circular frame.

15. The method of claim **11**, further comprising aligning one or more x-mounting holes on the inner assembly with one or more x-rotation holes on the circular frame, the one or more x-rotation holes being associated with the x-axis position.

16. The method of claim **15**, further comprising securing the x-axis position by inserting one or more locking pins into the one or more x-mounting holes aligned with the one or more x-rotation holes on the inner assembly.

17. The method of claim **11**, further comprising aligning a y-mounting hole on a y-axis assembly of the inner assembly with a specific y-rotation hole on a slide member of the inner assembly, the specific y-rotation hole being associated with the y-axis position.

18. The method of claim **17**, further comprising securing the y-axis position by inserting a locking pin into the y-mounting hole and the specific y-rotation hole when the y-mounting hole is aligned with the specific y-rotation hole.

19. The method of claim **11**, wherein the sensor comprises an Inertial Measurement Unit (IMU) sensor package.

20. An apparatus for calibrating a three axis Inertial Measurement Unit (IMU) sensor package on a single-axis rate table, the apparatus comprising:

means for rotating the IMU sensor package along an x-axis;

means for rotating the IMU sensor package along a y-axis; and

means for mounting the IMU sensor package to the single-axis rate table, the rotation of the IMU sensor package coinciding with rotation of the single-axis rate table and resulting an a controlled and simultaneous stimulation of all three axes of the IMU sensor package.

* * * * *