Two-Phase Flow System Design Status of the Flow Boiling and Condensation Experiment

Jesse deFiebre – GRC
Monica Guzik - GRC

Presented By
Jesse deFiebre

Thermal & Fluids Analysis Workshop
TFAWS 2018
August 20-24, 2018
NASA Johnson Space Center
Houston, TX

Outline

- Science Objectives
- System Overview
- Test Conditions
- Critical Components
  - Bulk Heater
  - Condenser
  - Accumulator
  - Degasser
  - Flight Functionality
- Current Status

Science Objectives

1. Develop an experimentally validated, mechanistic model for microgravity flow boiling Critical Heat Flux (CHF) with dimensionless criteria to predict minimum flow velocity required to ensure gravity independent CHF.
    - Obtain flow boiling data (heat flux, wall temperature difference, etc.) in long duration microgravity environments for a well characterized heating surface as functions of liquid inlet mass velocity and sub-cooling.

2. Develop an experimentally validated, mechanistic model for microgravity annular condensation with dimensionless criteria to predict minimum flow velocity required to ensure gravity independent annular condensation.
    - Obtain flow condensation data (heat flux, wall temperature difference, etc.) in long duration microgravity environments for a well-characterized condensing surface as functions of inlet quality and flow rate of condensing vapor.

Science Objectives

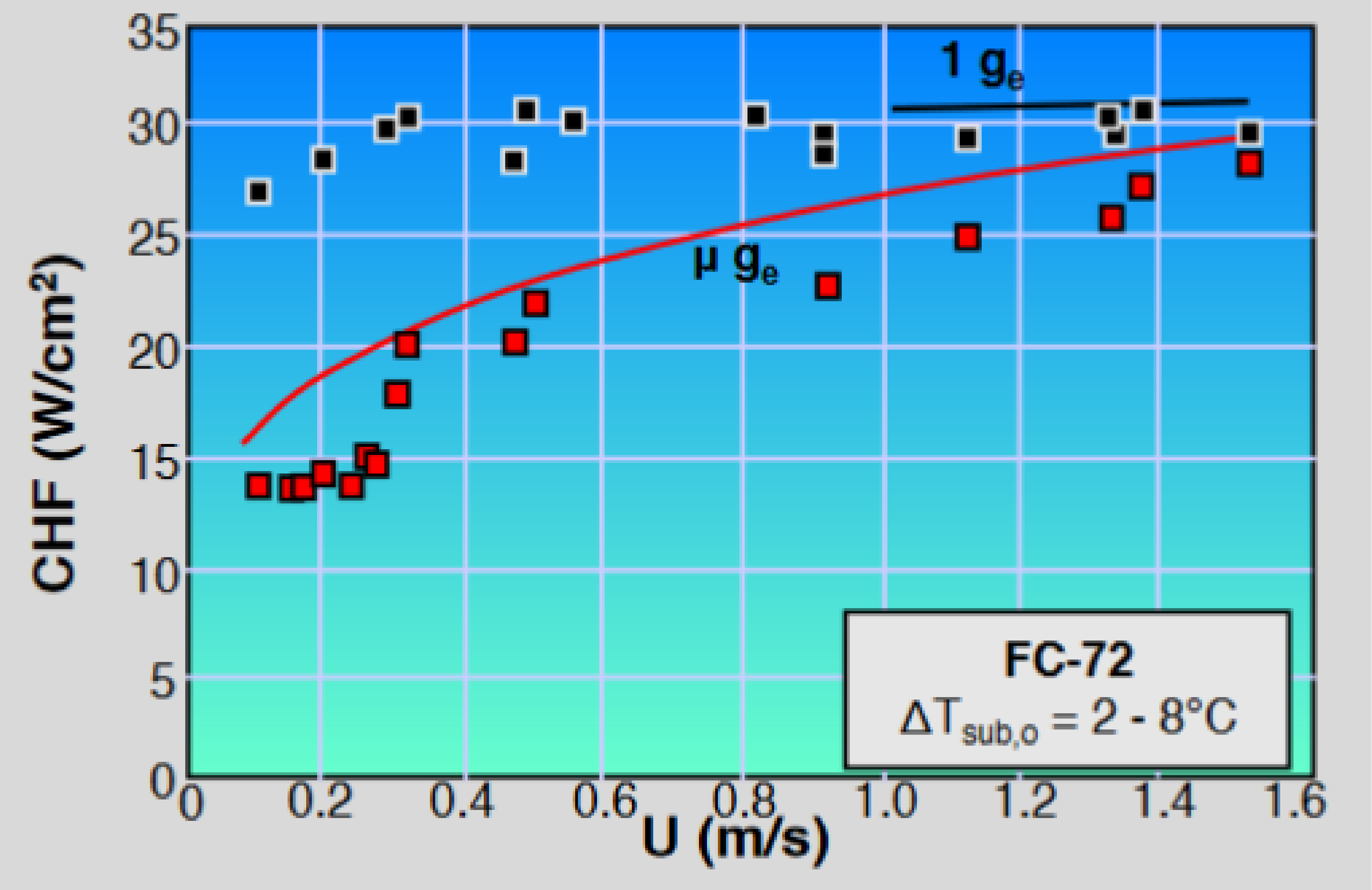

Relevance

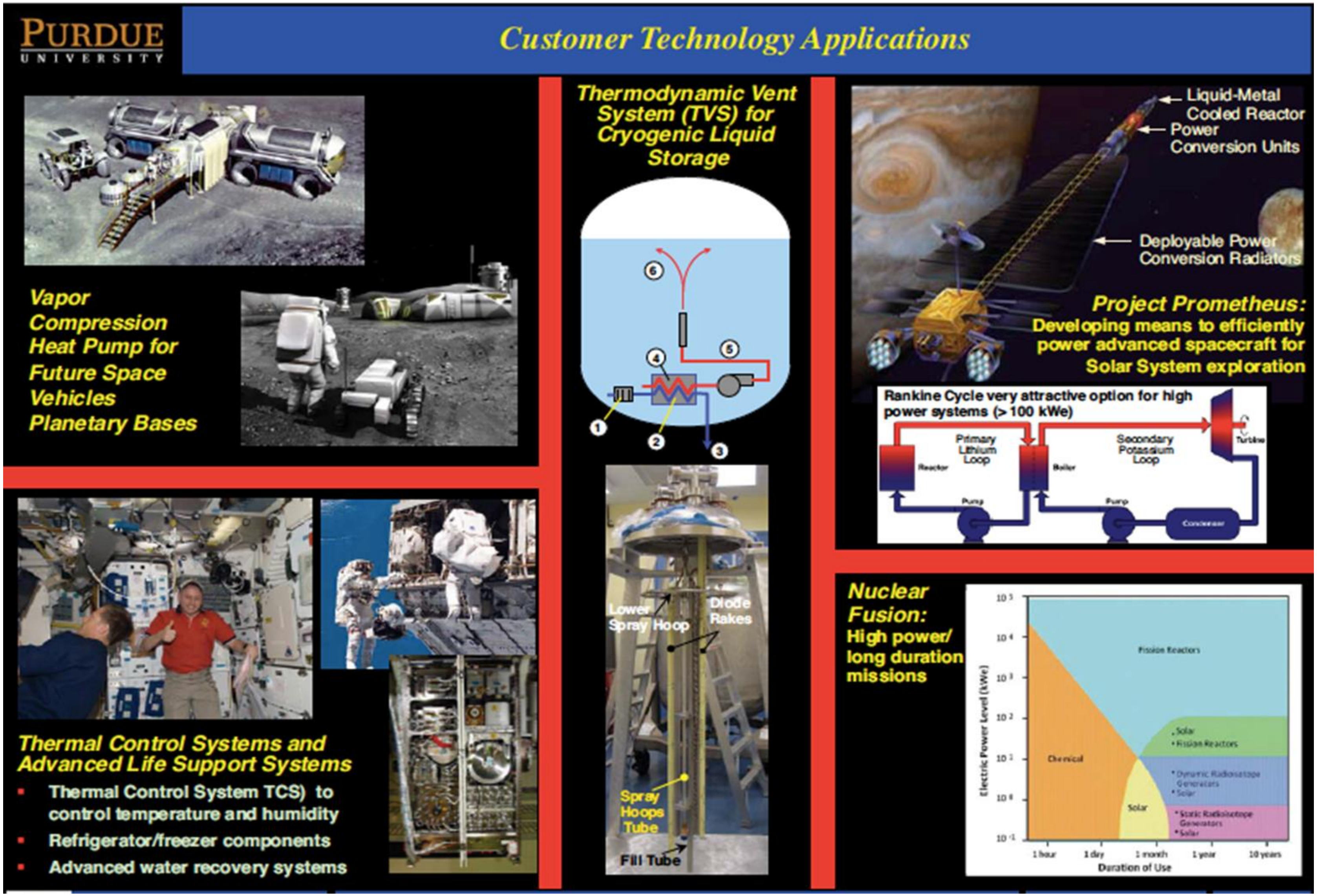

PURDUE UNIVERSITY

Customer Technology Applications

Vapor Compression Heat Pump for Future Space Vehicles Planetary Bases

Thermodynamic Vent System (TVS) for Cryogenic Liquid Storage

Project Prometheus: Developing means to efficiently power advanced spacecraft for Solar System exploration

Rankine Cycle very attractive option for high power systems (> 100 kWe)

Thermal Control Systems and Advanced Life Support Systems

- Thermal Control System TCS) to control temperature and humidity
- Refrigerator/freezer components
- Advanced water recovery systems

Nuclear Fusion: **High power/ long duration missions**

Project Timeline

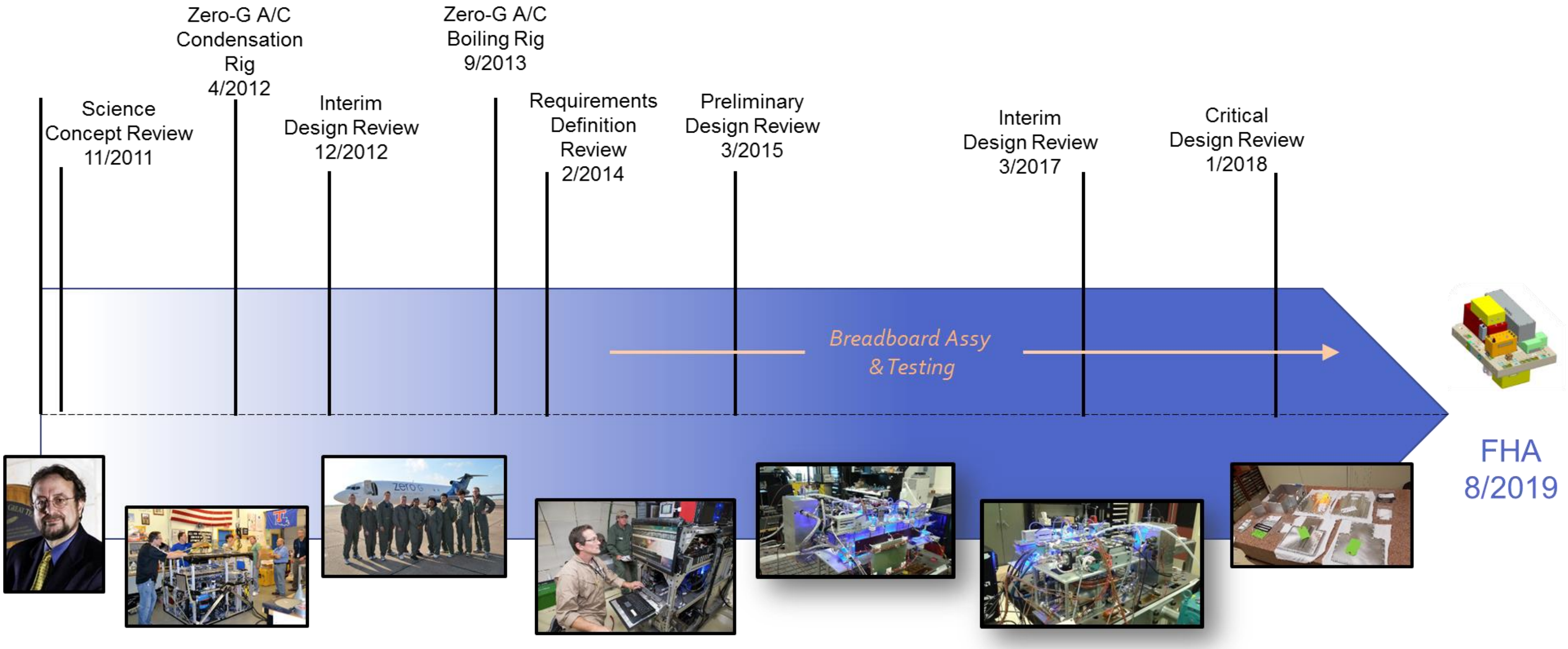

Science Concept Review 11/2011

Zero-G A/C Condensation Rig 4/2012

Interim Design Review 12/2012

Zero-G A/C Boiling Rig 9/2013

Requirements Definition Review 2/2014

Preliminary Design Review 3/2015

Interim Design Review 3/2017

Critical Design Review 1/2018

Breadboard Assy & Testing

FHA 8/2019

Flight System Overview

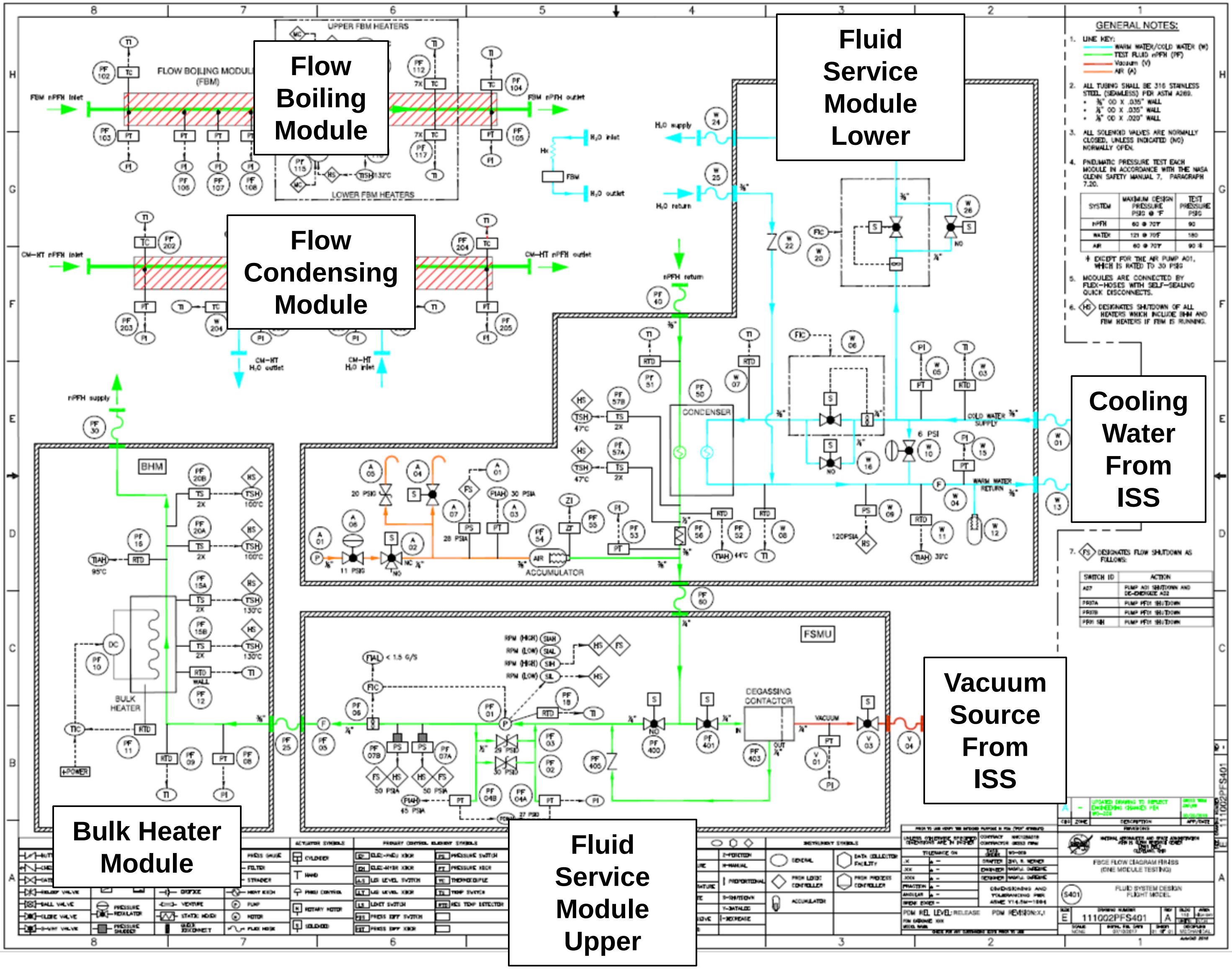

System Configuration

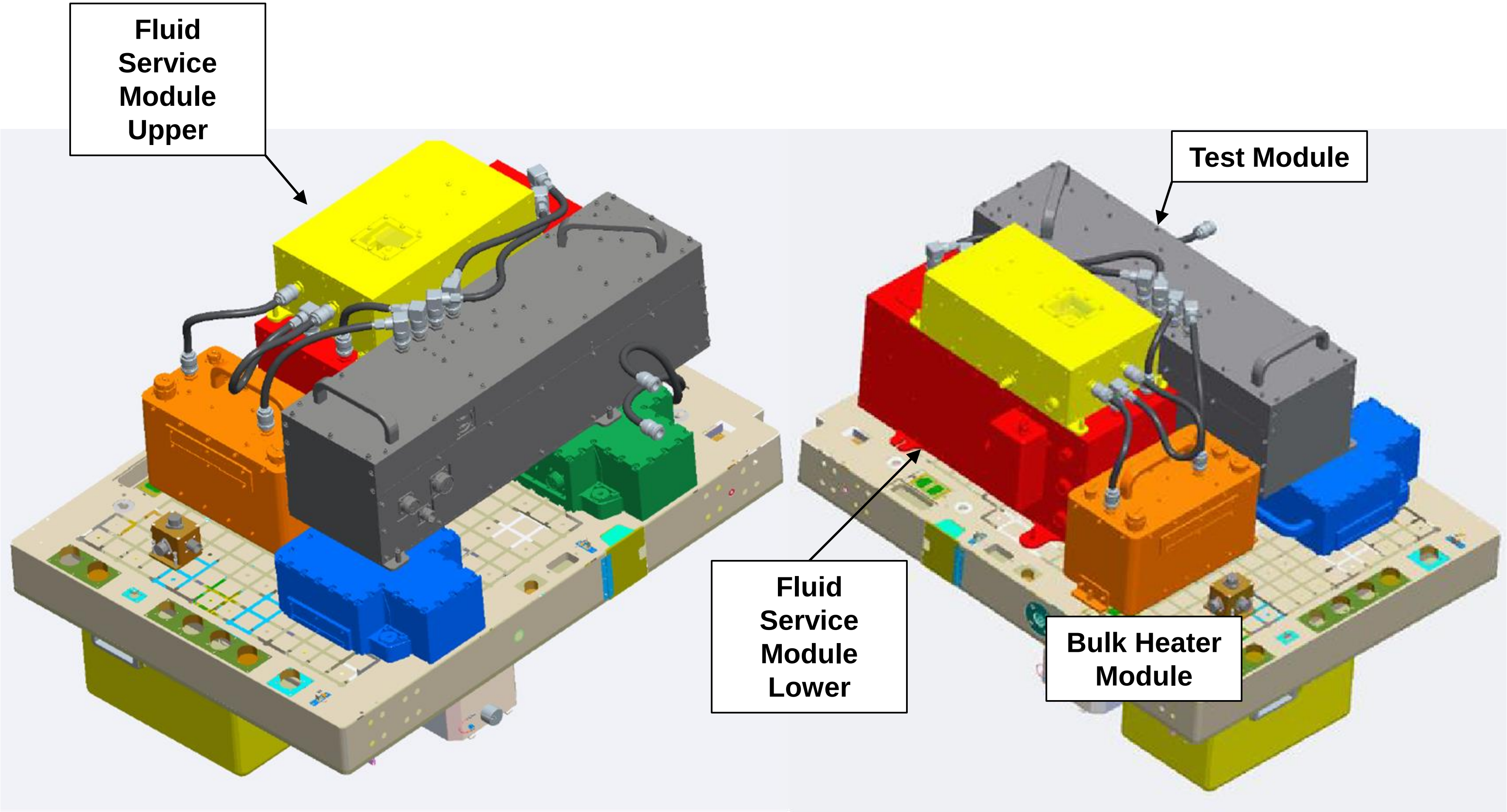

Fluids Integration Rack

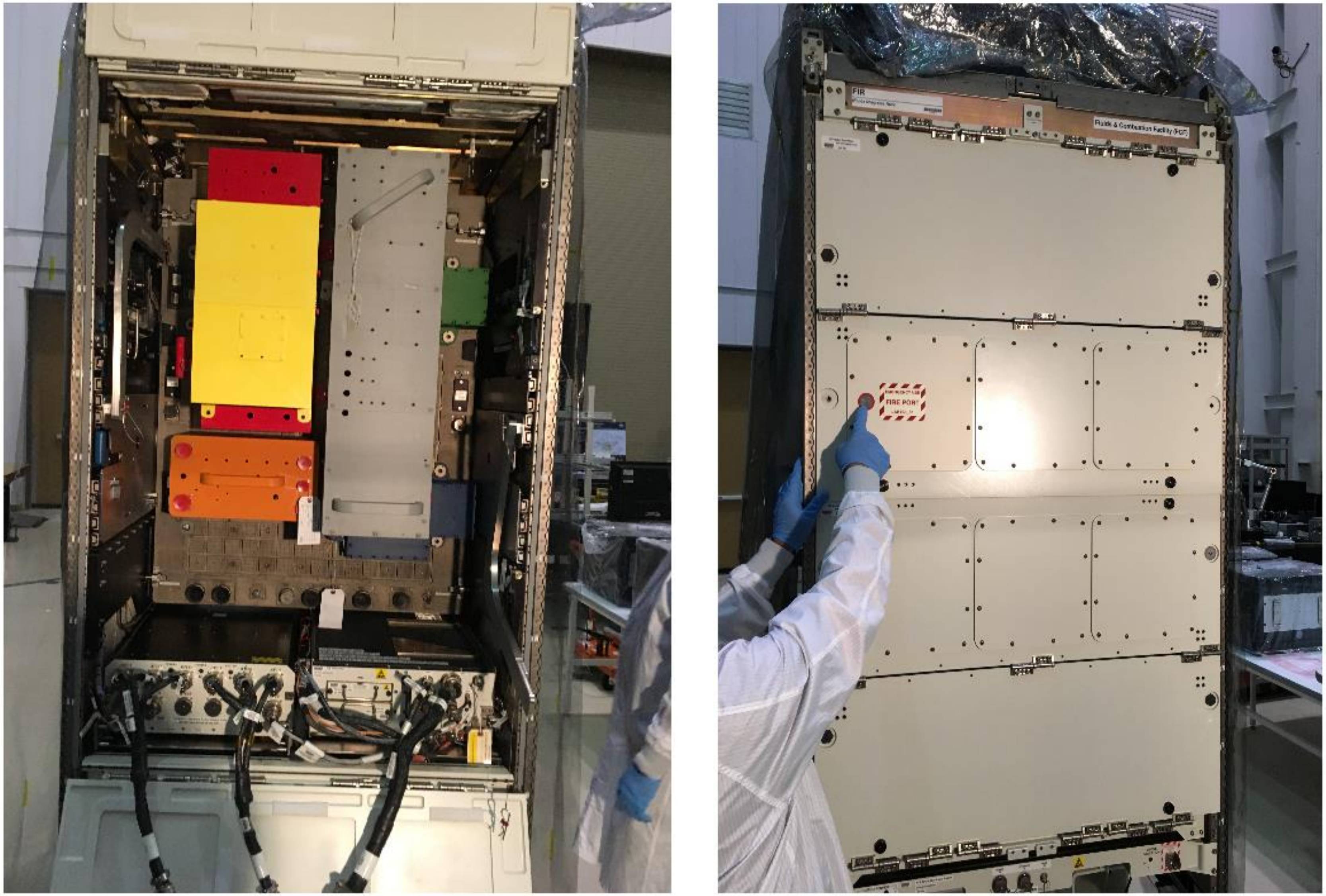

Operations

- Operations will be completely controlled from the Telescience Support Center at NASA GRC

Flow Boiling Module Test Conditions

- **Coolant**: nPFH (normal-Perfluorohexane, C_6F_{14})
- **Inlet quality**: $0 - 0.4$
- **Inlet pressure**: $100 - 150 \pm 20kPa$
- **Liquid inlet velocity**:

$$U = 0.1 – 2.0\frac{m}{s} \text{ for liquid inlet conditions}$$

- **Mass velocity**:

$$G = 180 – 3{,}200\frac{kg}{m^2 s} \text{ for two phase inlet conditions}$$

- **Inlet subcooling**:

$$DT_{sub,i^*} = 0 – 54°F\ (0 – 30°C)$$

- **FBM heater heat flux**:

$$q'' = 0 – 60\frac{W}{cm^2}$$

Condensation Module Test Conditions

- **Condensing fluid**: nPFH
- **Cooling fluid**: Water
- **Condensing fluid inlet pressure**: $100 - 150\ kPa$
- **Cooling water inlet temperature**: $68°F(20°C)$
- **Mass flow rate of nPFH**:

$$m_{nPFH} = 1 - 14\frac{g}{s}$$

- **Mass flow rate of cooling water**:

$$m_{water} = 10 - 40\frac{g}{s}$$

- **Temperature rise of cooling water**:

$$\Delta T_{water} = 9 - 54°F\ (5 - 25°C)$$

Simplified Fluid Diagram

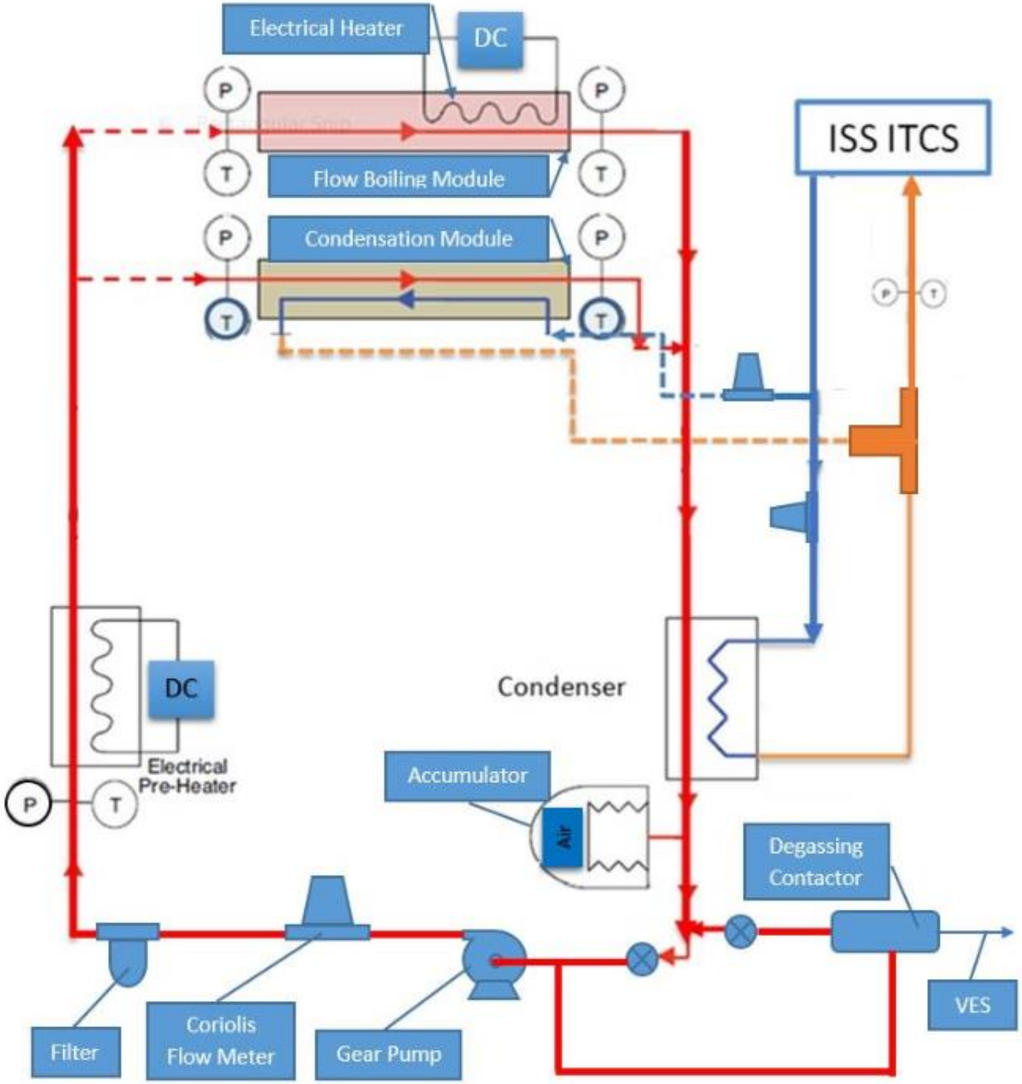

Flight Functionality

- Accumulator
- Condenser
- Pump/ Mass Flow Controller
- Mass Flow Meters
- Test Module Assemblies
- Heater
- Temperature Control

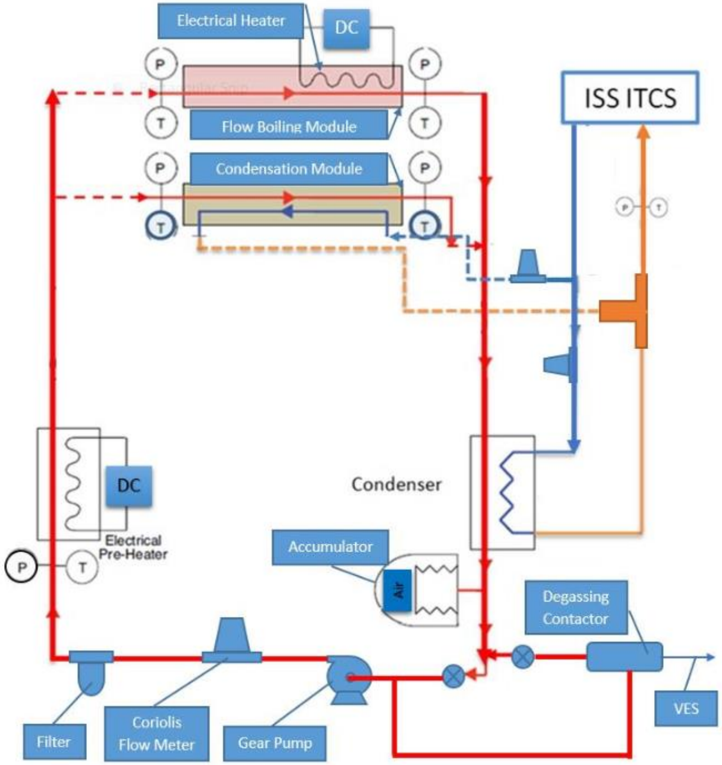

Degassing

- The test fluid, normal-perfluorohexane (nPFH) has a high affinity for the absorption of oxygen and nitrogen. Small system leaks will cause build up over time of these noncondensable gases causing degradation in heat transfer. The degasser loop removes them.

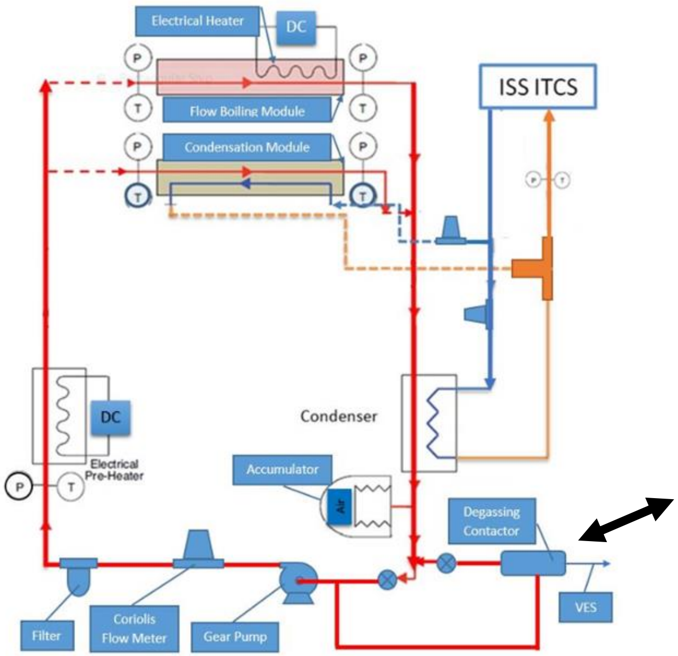

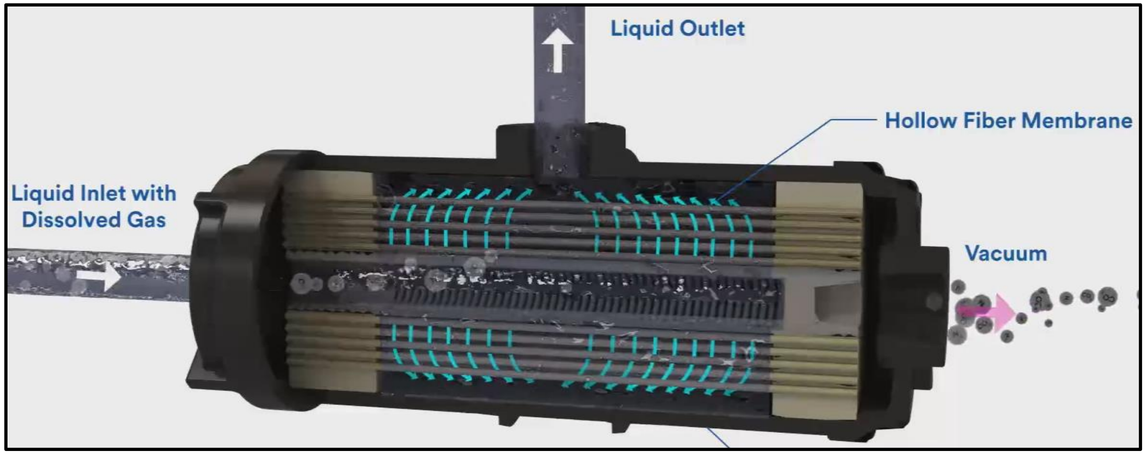

Pressure Control - Accumulator

- To control system pressure an air adjustable bellows accumulator was designed.

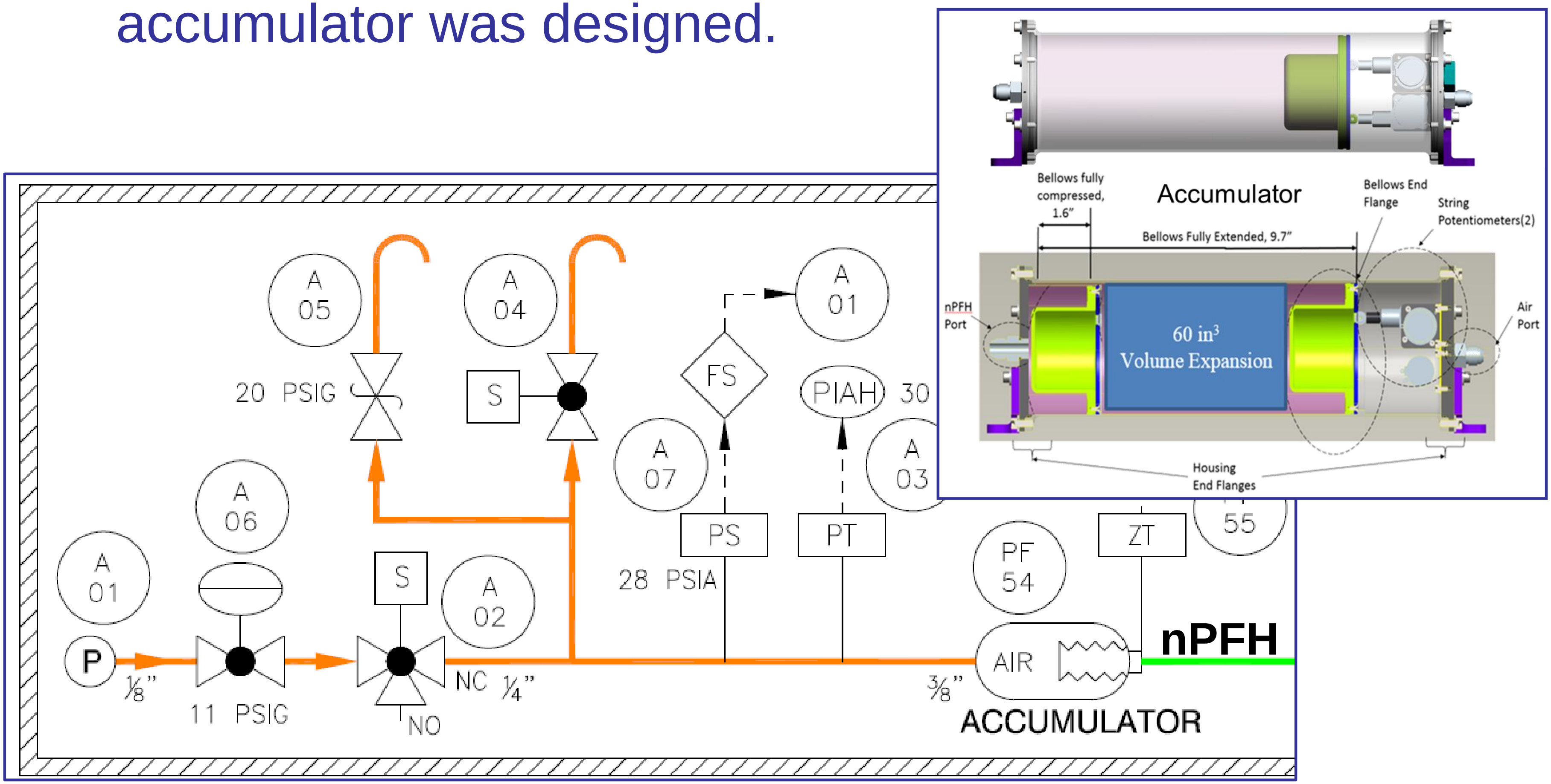

Temperature Control

- The Bulk Heater heats the nPFH to provide the temperature needed at the inlet of the test module.
- Designed based on Lessons Learned from previous flight experiment to avoid direct contact of heaters with the nPFH fluid as a safety hazard mitigation
- Construction
  - Coiled stainless steel tubing
  - Cast aluminum thermal mass
  - Embedded heaters and temperature sensors.

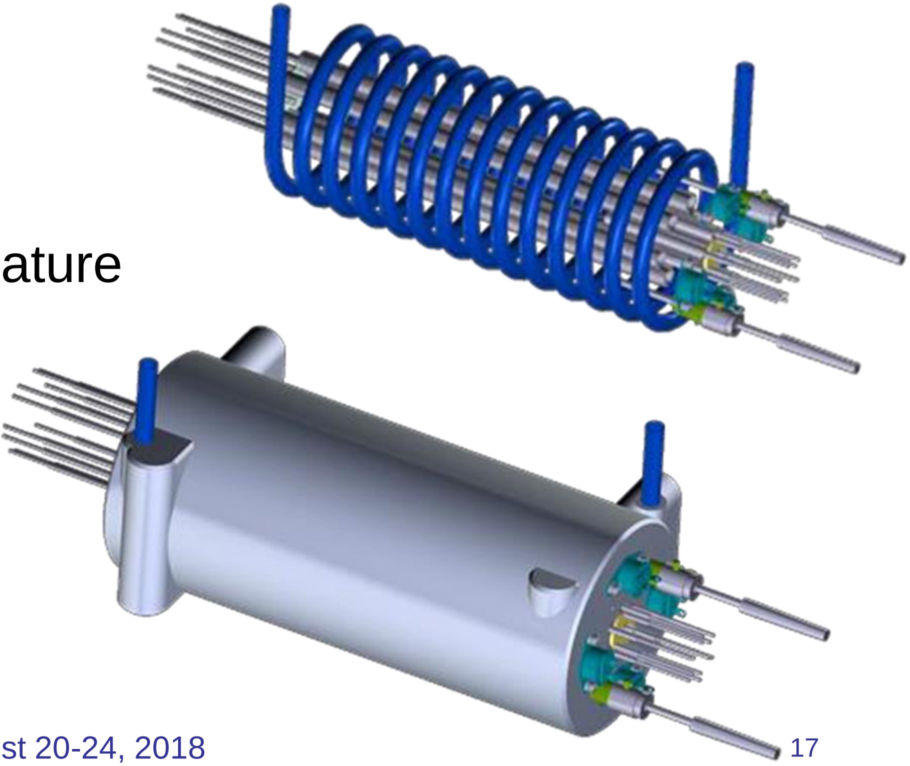

Test Module Outlet Conditioning

- Original breadboard condenser material was copper
  - Great thermal conductivity properties
- Flight unit cannot be copper due to incompatibility with ISS coolant water
- Stainless steel was chosen for flight unit
  - Thermal conductivity < copper
  - Resulted in increased size/ decreased thermal performance

- During brassboard testing, bubbles were observed in the condenser outlet
  - Theorized that slug flow through condenser combined with decreased performance resulted in some noncondensed vapor
  - Opposing theories suggest noncondensable gas presence due to incomplete degassing operations or transient heating

Brassboard

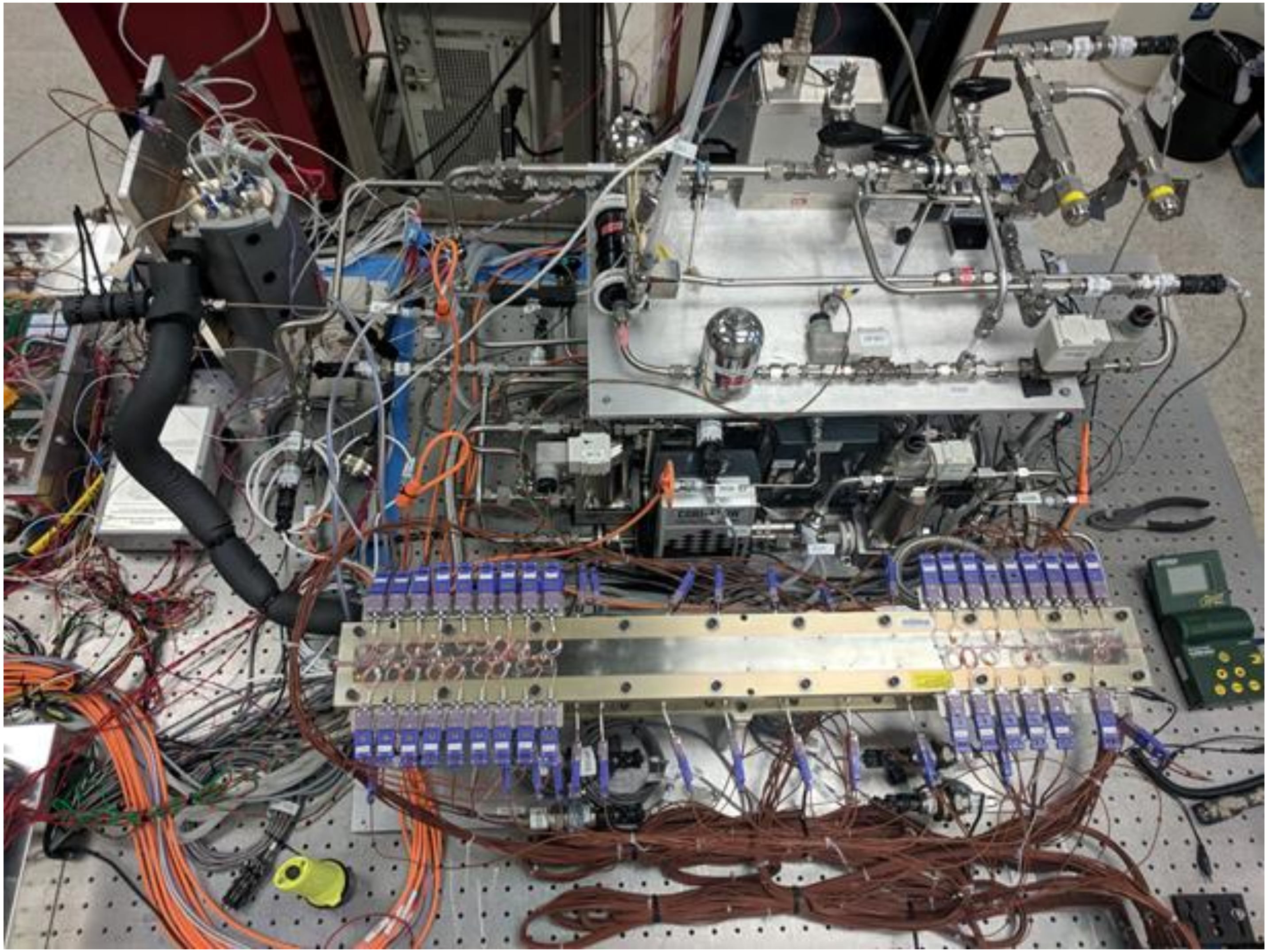

Findings During Brassboard Testing

- Precise control of conditions (temp, pressure, quality) at a given location in a closed two-phase flow loop is difficult and requires control of multiple variables (heater power, system pressure, flow rate)
  - Test matrix should be informed by analysis during requirements development to avoid having to make late changes to the design and/or requirements
- Essential to have flight-like hardware in an engineering brassboard as early as possible (i.e. condenser material change being a bigger issue than expected, etc.)
- Try to implement automated controls into an engineering brassboard as early as possible – transient response of a two-phase flow loop can cause surprises when switching from manual to automated control or anticipate transients when designing control loops

Current Status

- All fluid procurements have been made.
  - Most have been delivered.
- Tube assemblies are being manufactured.
- The accumulator is being assembled.

Summary

- Currently in hardware assembly phase
- System level testing scheduled to begin in January 2019
- Still targeting FHA of August 2019
- Anticipate test start aboard ISS in early 2020

Questions?


µg
FBCE
NASA Glenn Research Center
Purdue University
FLOW BOILING AND CONDENSATION EXPERIMENT