2-micron Laser Technology Advancement at NASA LaRC

Upendra N. Singh
Chief Technologist
Engineering Directorate
NASA Langley Research Center
Hampton, Virginia, USA
E-mail: upendra.n.singh@nasa.gov

2010 IEEE International Geoscience and Remote Sensing Symposium
Honolulu, Hawaii, July 25-30, 2010

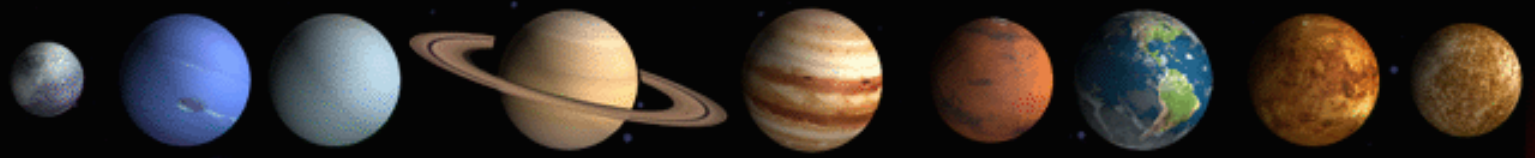

Earth Sciences Application Foci

2 Lasers, 4 Techniques, 6 Priority Measurements

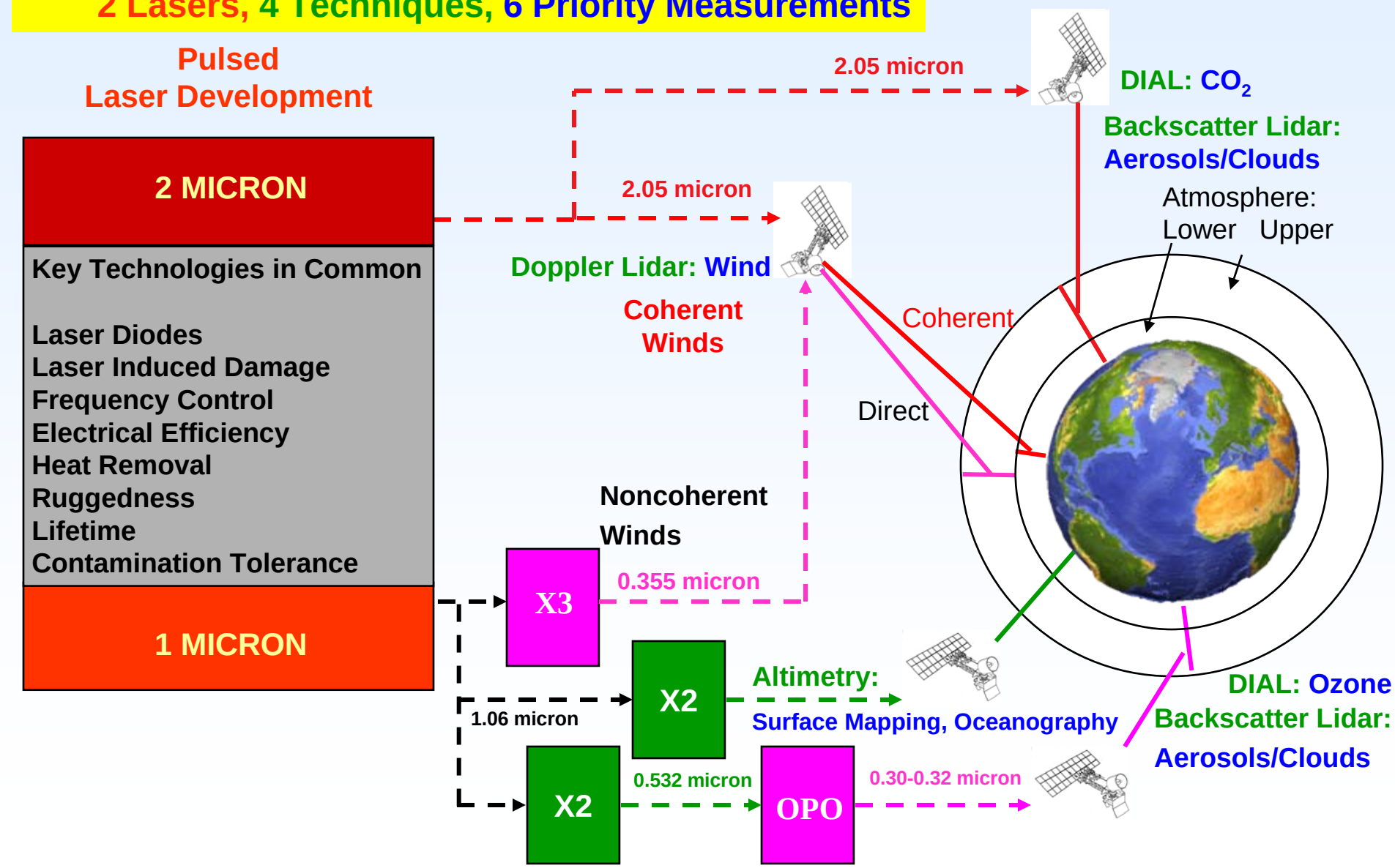

2-micron Laser for Wind and CO_2 Measurements

- **Coherent Wind Lidar**
  - High energy, high efficiency, and long life time
  - Narrow linewidth gives high measurement accuracy
  - Eye safe wavelength allows global coverage

- **CO_2 DIAL/IPDA Lidar**
  - High Energy/Low PRF for DIAL – Ground
  - Moderate Energy/Mod PRF for DIAL/IPDA – Air/Space
  - Low Energy/High PRF for IPDA – Air/space
  - Narrow spectral absorption lines near 2-micron
  - 2-micron laser provides tunability needed for DIAL

Technology Maturation Example

A fully conductively cooled 2-micron solid-state pulsed laser has been demonstrated to enable 3-D Winds and/or global CO_2 from a space platform

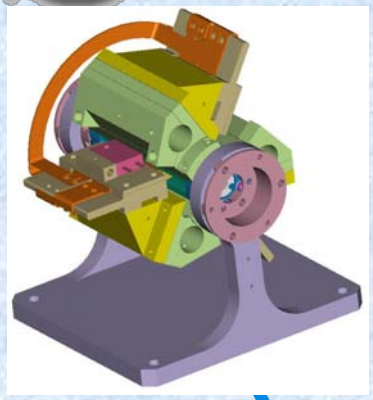

Analysis & Design

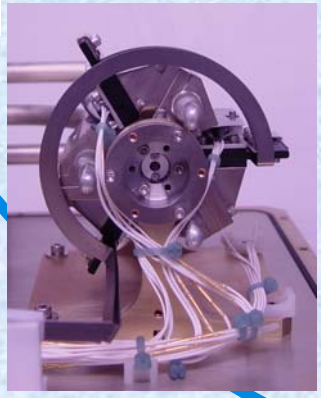

Fabrication

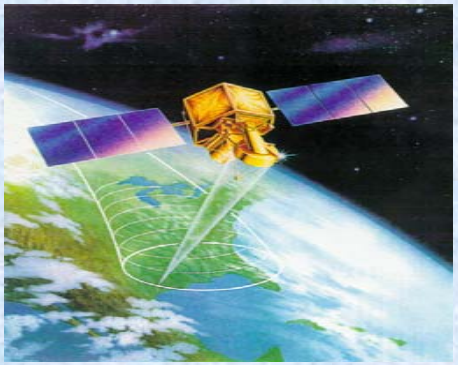

Space Qualifiable Design



Quantum Mechanical Modeling

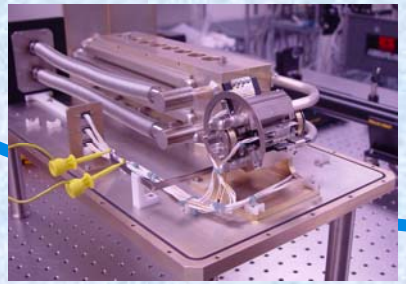

System Integration



Testing and Model Verification

MOPA Schematic

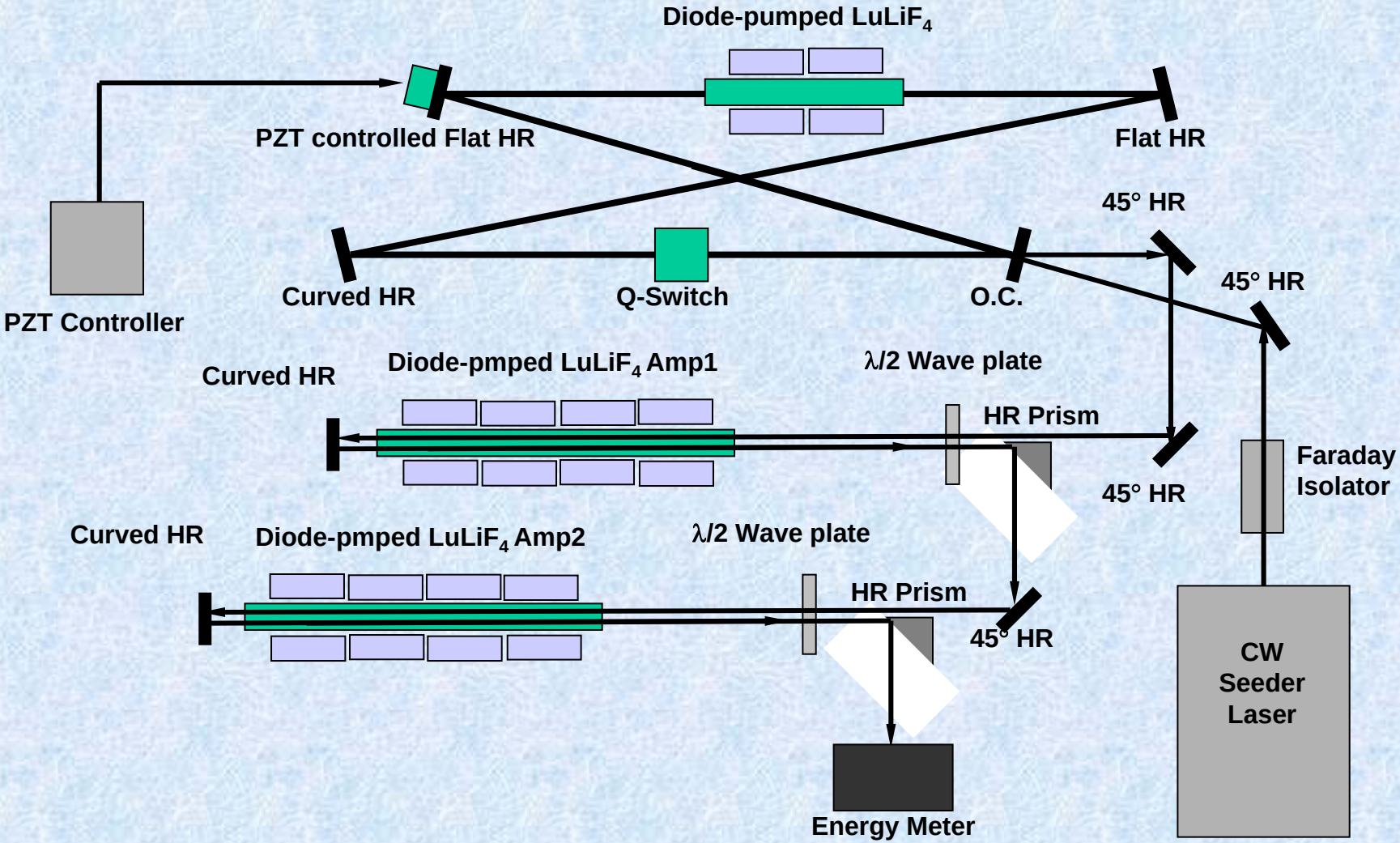

Oscillator Output Energy

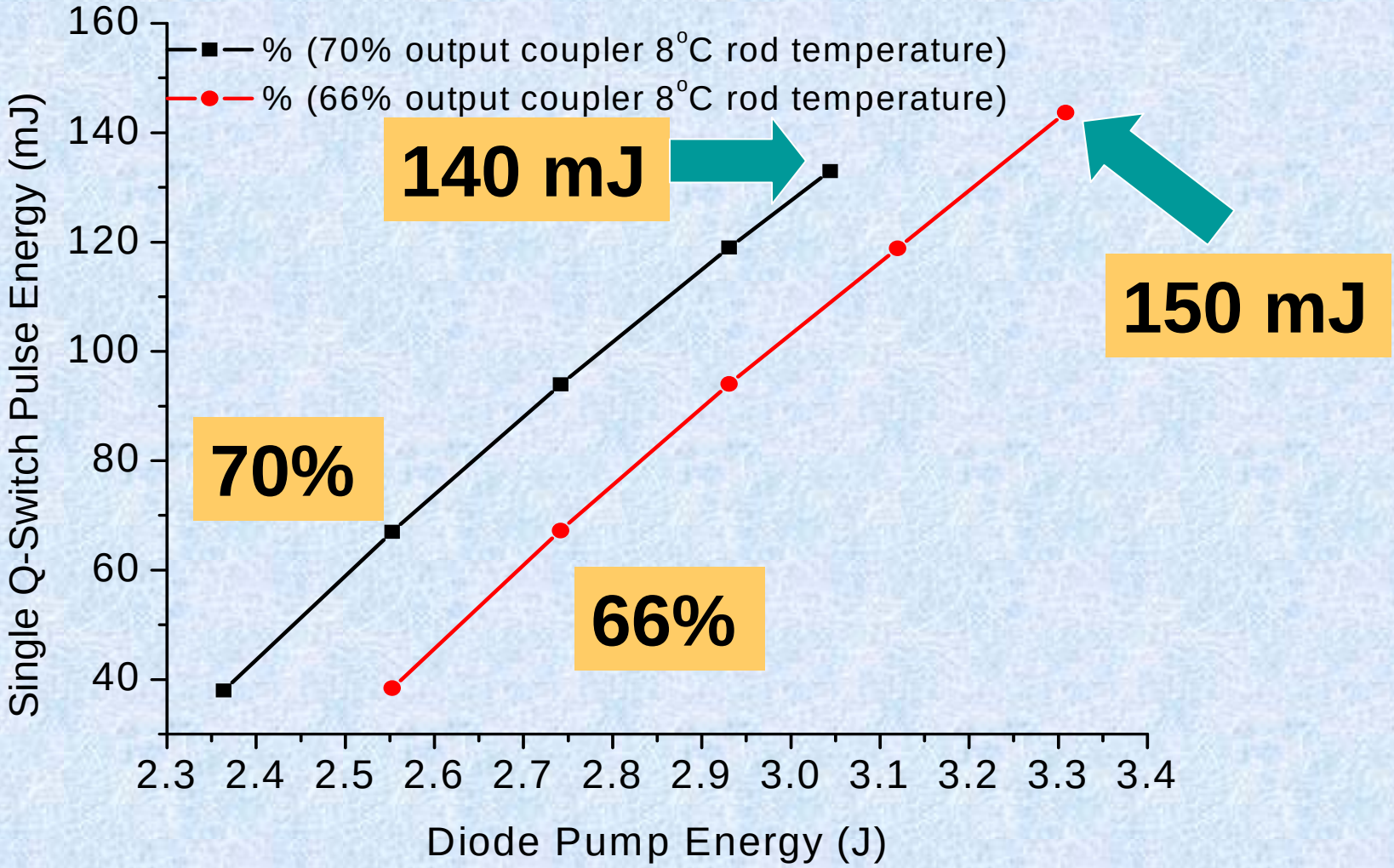

Amplifier Performance

(First and Second)

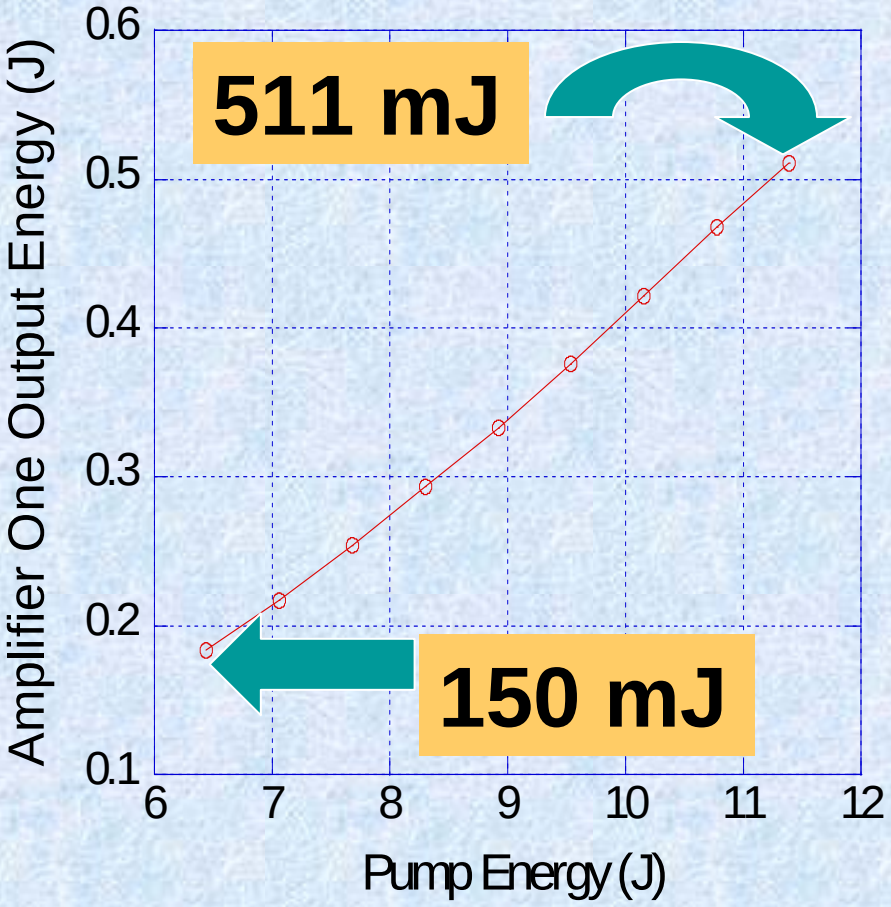

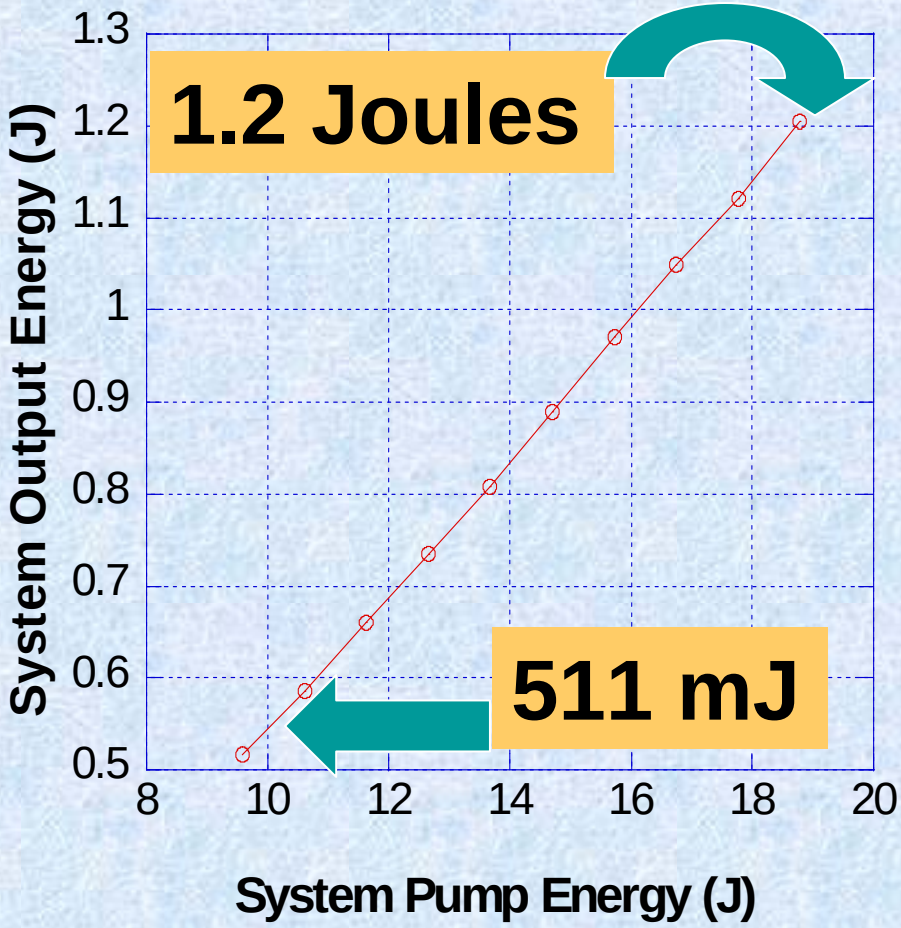

Pulsed Laser Advancements

	Pulse Energy*	PRF	Components	Cooling	Packaging
12/05 ✓	**1200 mJ**	**2 Hz**	Oscillator + 2 Amplifiers (both 2-pass)	Laser Diodes Conductive; Laser Rod Liquid	Optical Table
8/07 ✓	**400 mJ**	**5 Hz**	Oscillator + 1 Amplifier (2-pass)	All Conductive	Compact
11/07 ✓	**355 mJ**	**10 Hz**	Oscillator + 1 Amplifier (2-pass)	Laser Diodes Conductive; Laser Rod Liquid	Compact, Engineered
12/08 ✓	**350 mJ**	**10 Hz**	Oscillator + 1 Amplifier (1-pass)	Laser Diodes Conductive; Laser Rod Liquid	Improved Compact, Engineered
Space Science Mission	250 mJ	5 Hz	Oscillator + 1 Amplifier	All Conductive**	Compact, Engineered, Space Qualified
Space Operational Mission	500, 1650, or 825 mJ	5 or 10 Hz	TBD	All Conductive	Compact, Engineered, Space Qualified

* 1 pulsette per pulse

**Unless on the ISS with cooling provided

DAWN Transceiver

- Smaller
- More energy
- More robust

Table Top Transceiver (Transmitter + Receiver)
90 mJ/pulse, 5 pulses/sec.
3'x4' Optical Table
(no telescope or scanner)

DAWN Transceiver (Transmitter + Receiver)
250 mJ/pulse, 5 pulses/sec.
5.9" x 11.6" x 26.5", 75 lbs.; 15 x 29 x 67 cm, 34 kg
(no telescope or scanner)

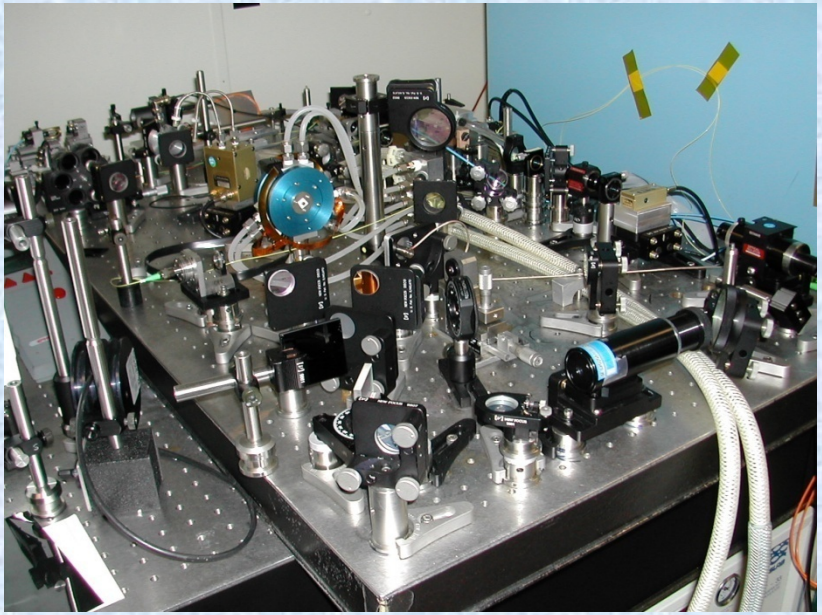

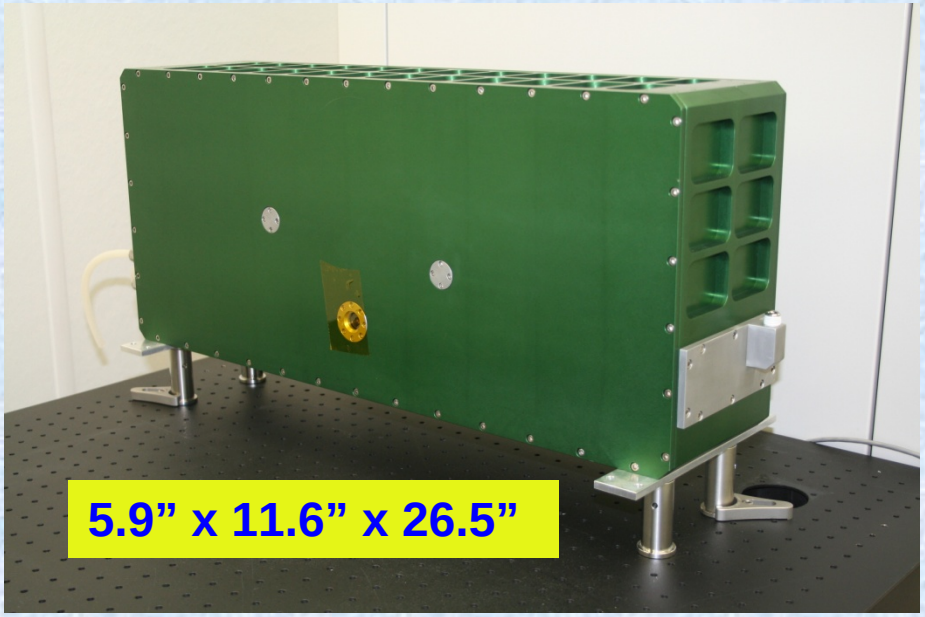

Previous implementation
90 mJ per pulse

Completed DAWN package
Small, Robust, 250 mJ per pulse

Single/Double - Pass Amplification

Amplification of 5Hz/80mJ/334ns Pulse

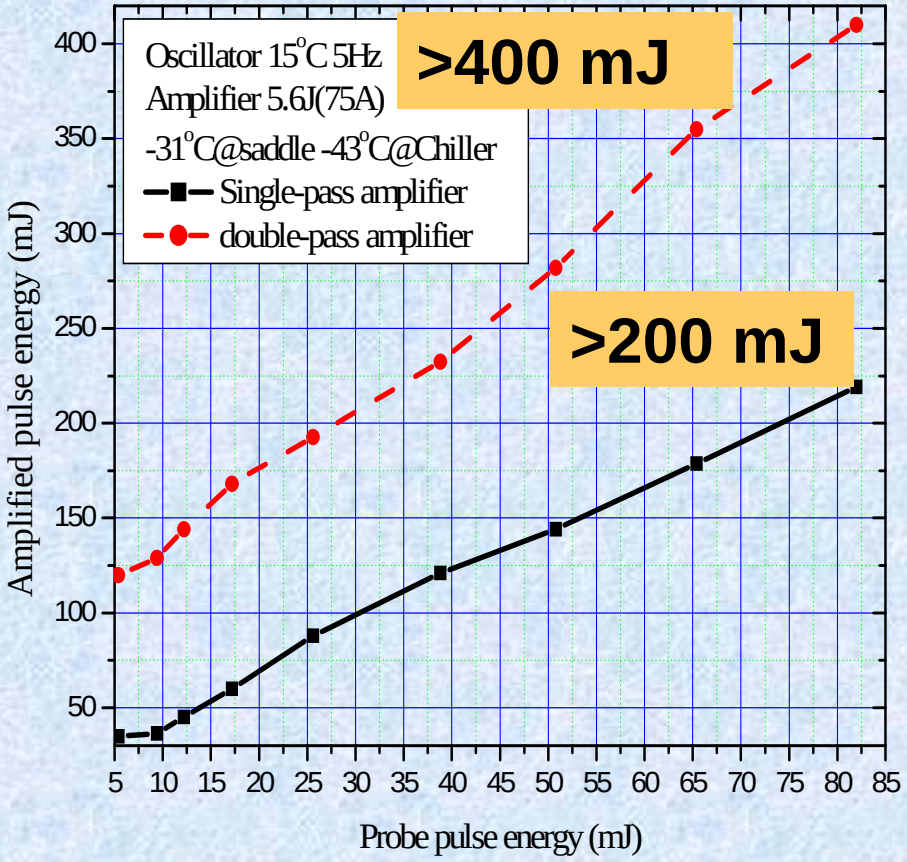

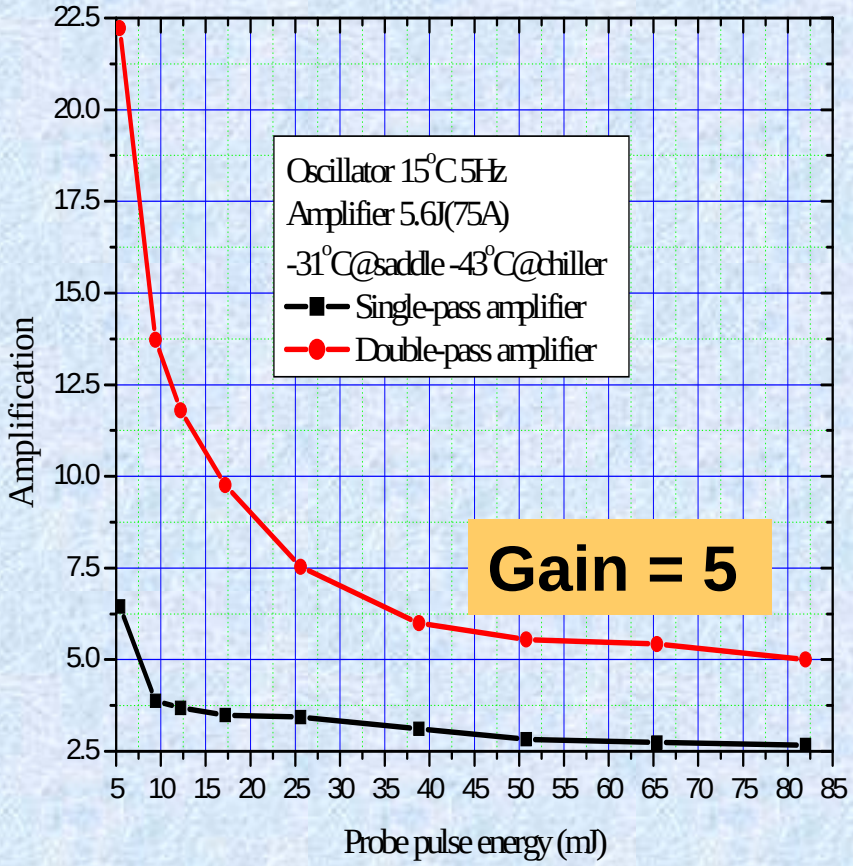

DAWN-AIR 1
Artist Concept

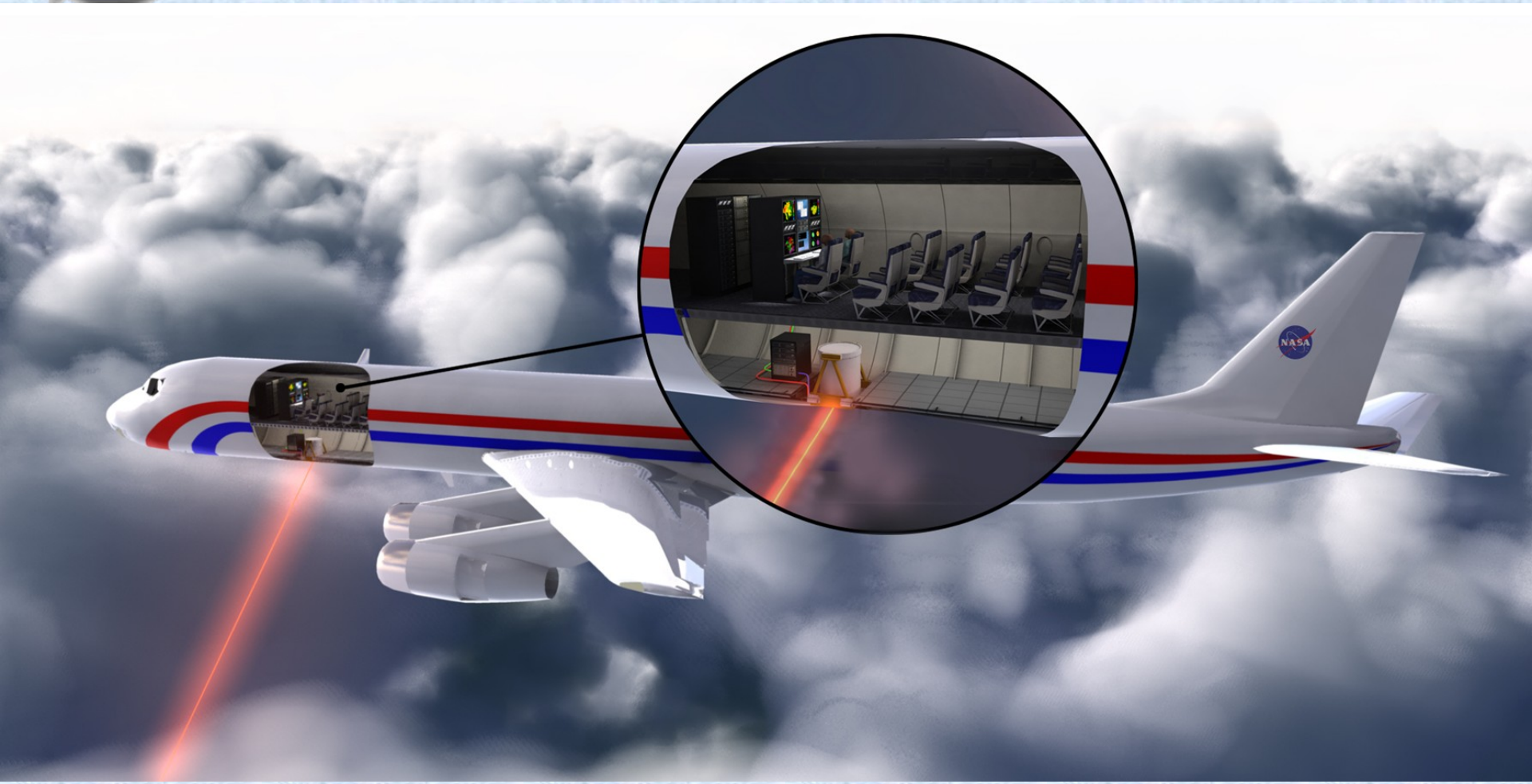

- 30 deg nadir angle
- Any azimuth angle

Genesis and Rapid Intensification Process (GRIP) Campaign

Coherent Pulsed Doppler Wind Profiling Lidar System

1. World's Most Capable Transceiver

Packaged, Compact, Robust



- 0.25 J pulse energy, 10 Hz pulse repetition frequency (PRF)
- 15 cm receiver optical diameter, 34 kg (75 lbs.)
- 15.2 x 29.5 x 67.3 cm (6 x 11.6 x 26.5 inches)

2. Complete System Utilizing Transceiver

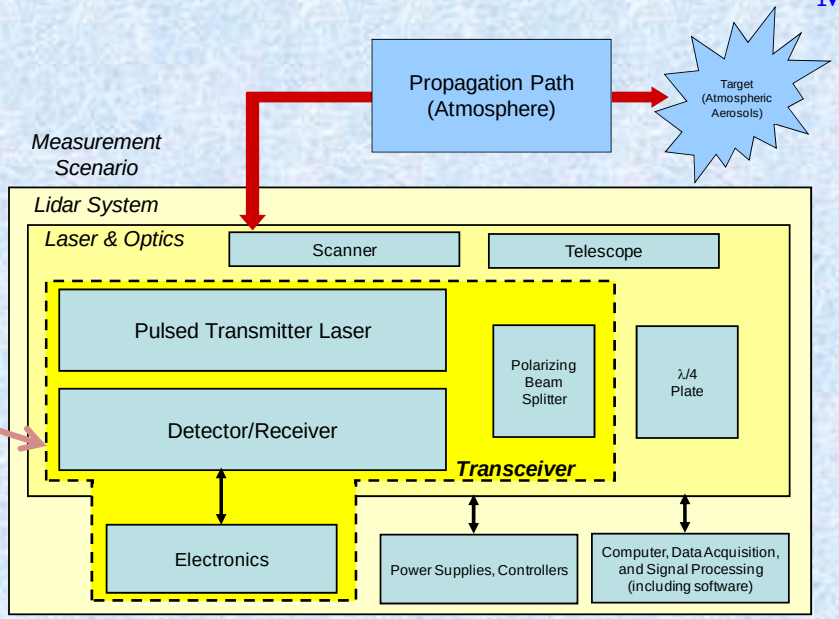

3. Ground-based Wind Measurement Performance

- RMS wind difference from balloon sonde, 0 – 6 km altitude, = 1.1 m/s and 5.8°
- No alignment needed after interstate travel in trailer
- Overnight unattended operation
- Vertical winds to 11 km altitude
- Horizontal vector winds to 7 km altitude
- Data processing choice of multiple values of vertical and horizontal resolution
- Same technology as anticipated space mission

4. Enclosure for All Lidar Optics

Robust Aircraft Design

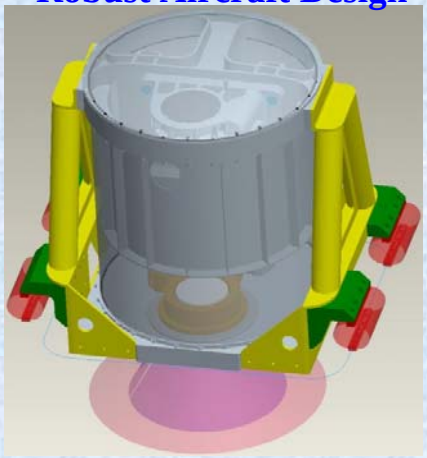

5. Optics in DC-8

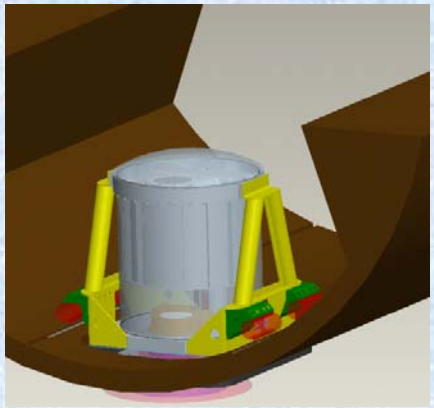

6. Lidar System in DC-8

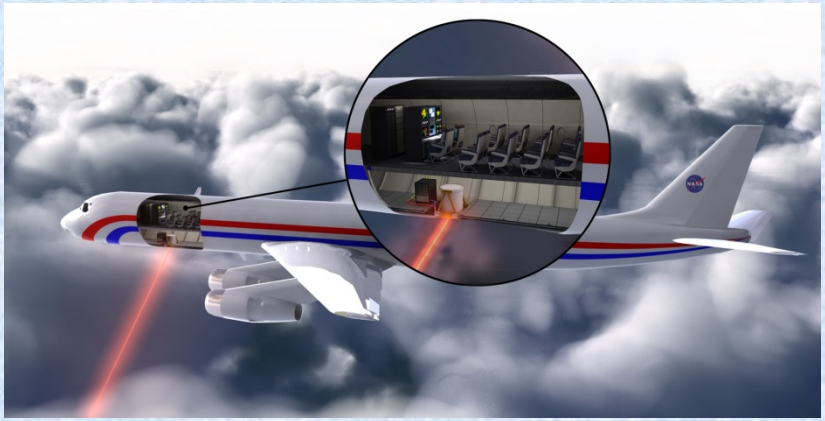

Roadmap to 3-D Winds Space Mission

Technology

Current

Science

Future



NRC Decadal Survey
3-D Winds Space Mission

15 ESD 22



Aircraft Science Flights

10 14

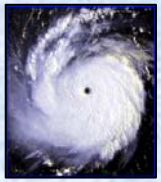

GRIP Hurricane Campaign

10 ESD 12



DAWN-AIR2

09 ESTO 11



DAWN-AIR1

08 ESD 10



Ground Intercomparison

08 ESD 09



IPP

08 ESD 10



DAWN

06 ESTO 08



LRRP

02 ESTO 09



ATIP

98 ESTO 01

Funded Projects

Technology

Past

Current

2 μm Laser for CO_2 DIAL (Profile/Column)

- High efficiency
- High average power
- Good beam quality
- Single frequency
- Wavelength switching and controlling

Lidar Transmitter

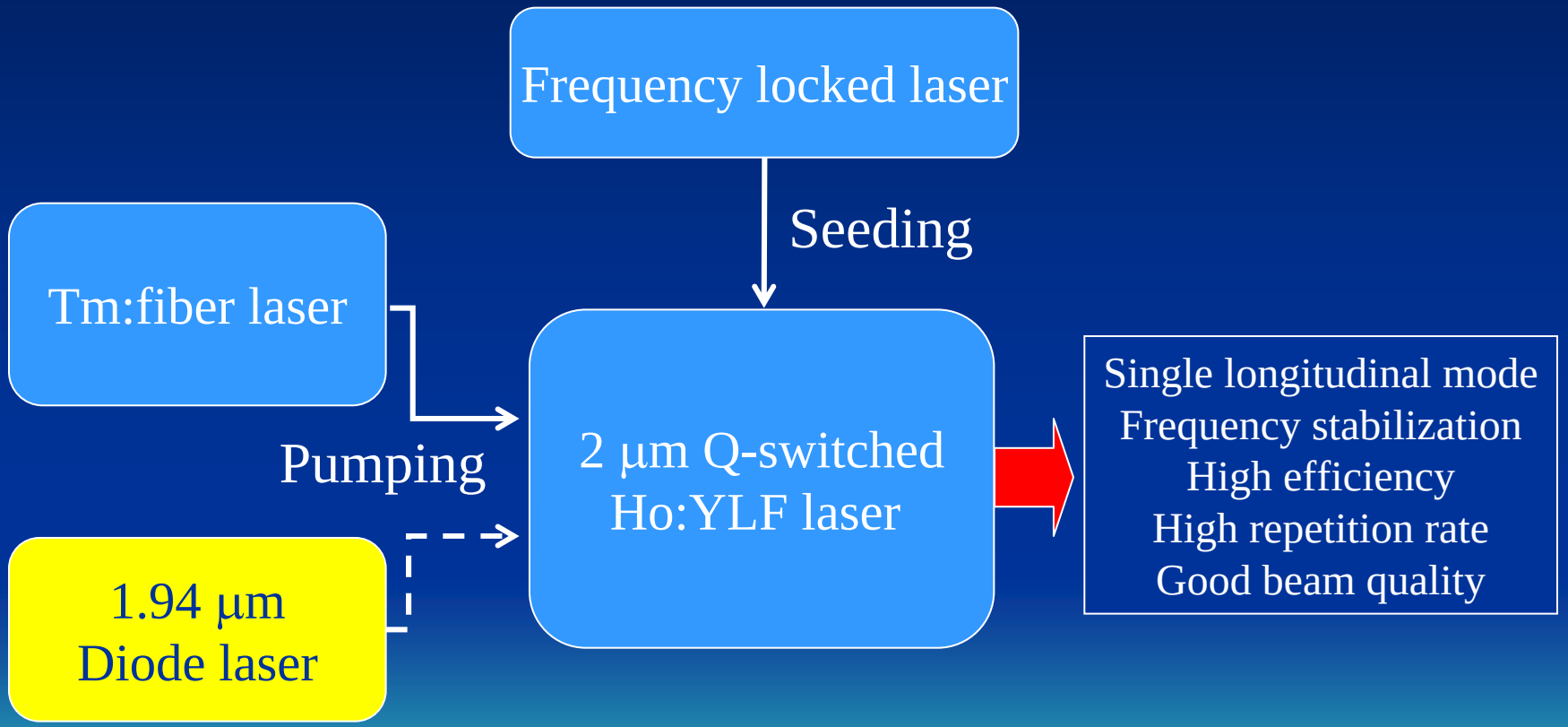

Master Slave Laser System

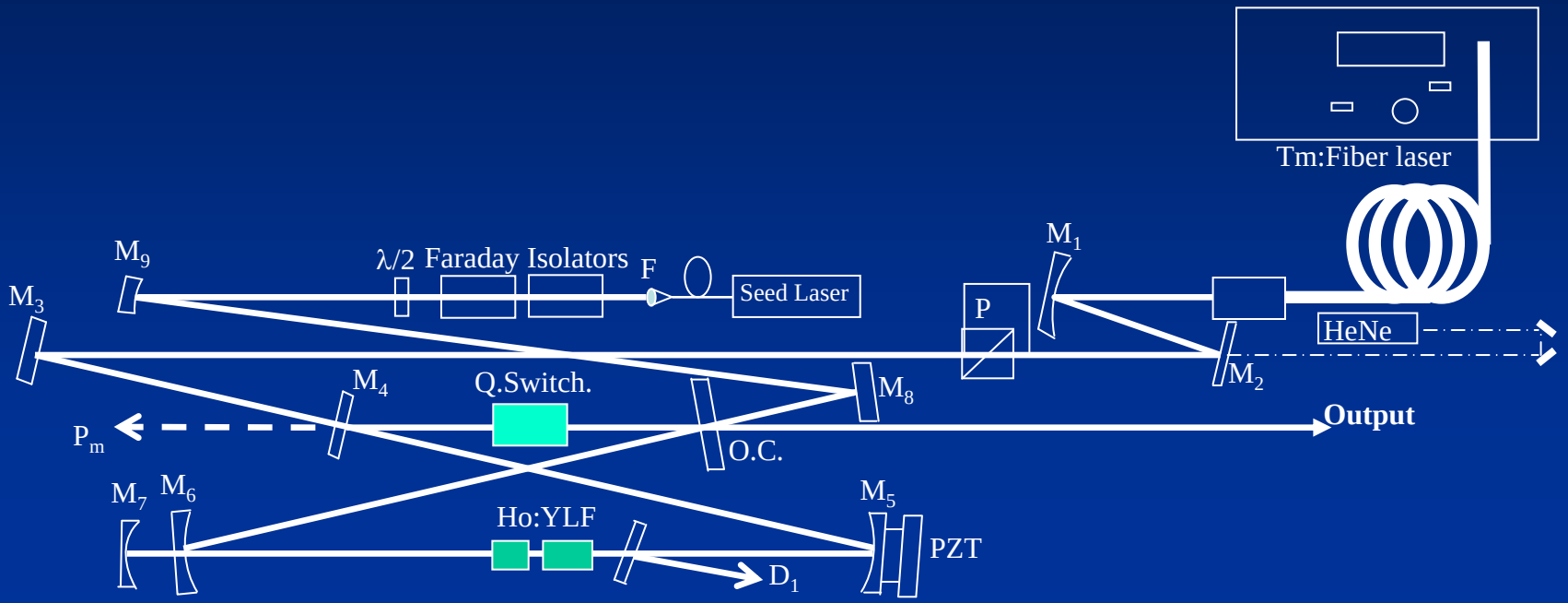

The pumping beam, laser beam, and seeding beam are mode-matched.

High Repetition Rate Operation

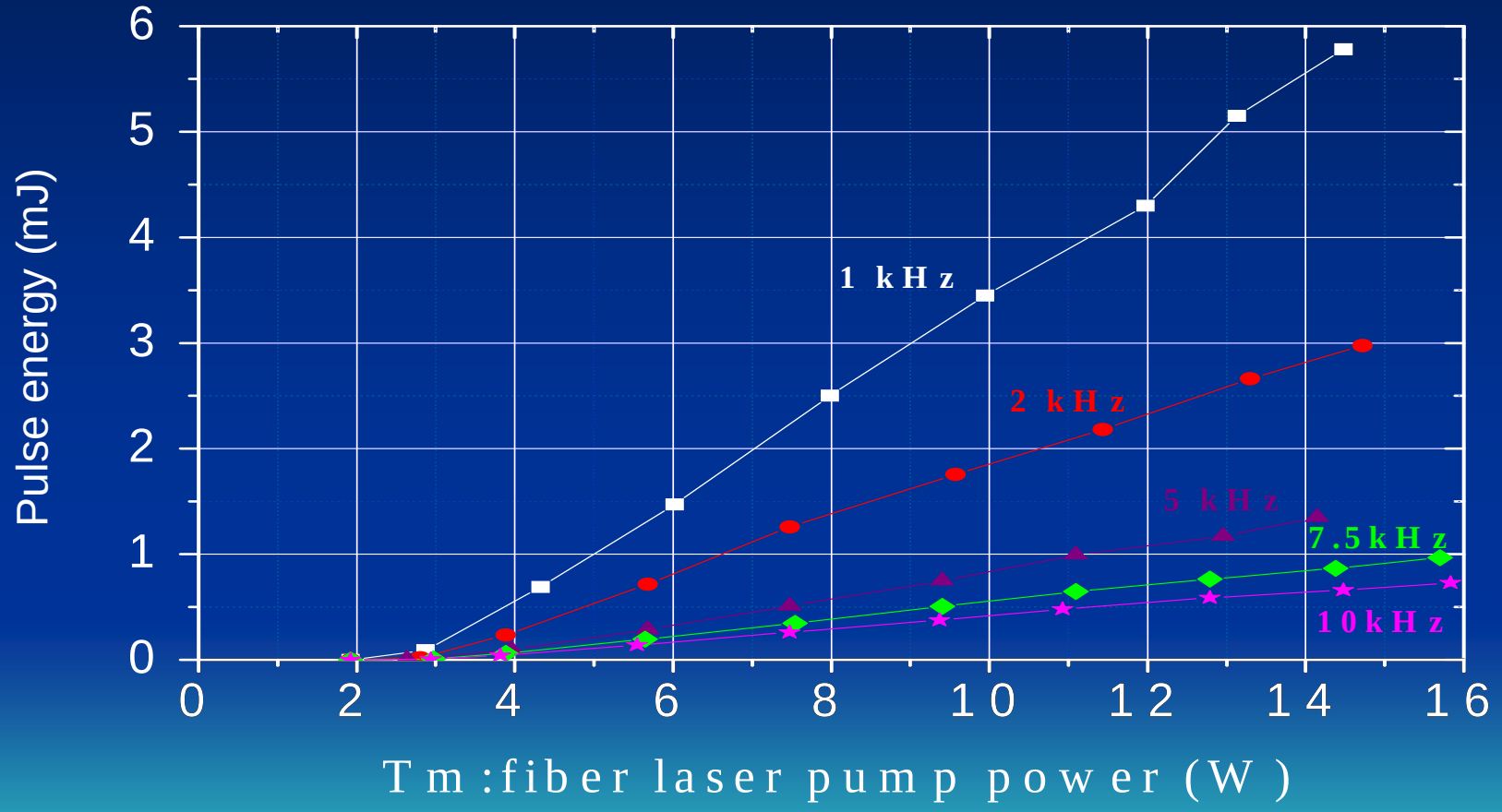

Coherent Pulsed CO_2 IPDA/DIAL Roadmap

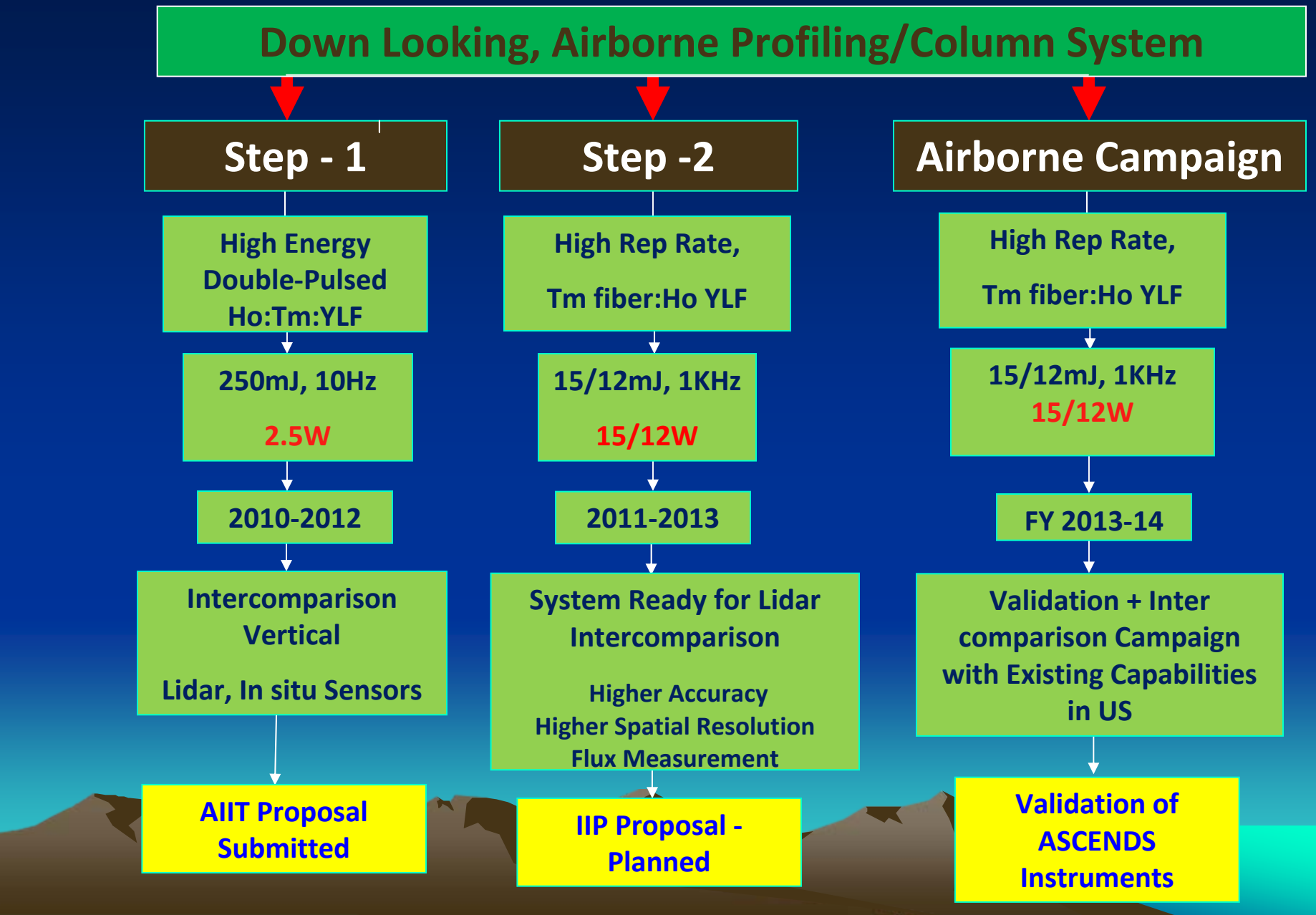

Pulsed CO_2 IPDA/DIAL Column Roadmap

Column, Down Looking, Space borne System

Coherent

- Space borne Column
- High Rep Rate, Tm fiber:Ho YLF
- 1mJ, 7.5KHz Injection Seeded
- Valid Approach if Ultra-low noise Detector for Direct Detection is not Available

CO_2 profiling from space is currently not feasible due to lack of mature technology. The energy and receiver technology needs to advance by more than an order of magnitude. Laser does not exist and development of an appropriate laser will require at least 5-7 years of sustained efforts with lot of funding.

Direct

- Space borne Column
- Mod Energy, Mod Rep
- 65/50 mJ, 50 Hz Injection Seeded Large Telescope, Ultra-low noise Detector
- Preferred Approach if low NEP Detector is Available - EXCALIBUR prefers this approach ESA is developing detector

Pulsed 2-micron Transmitter for Direct and Coherent Detection of CO_2

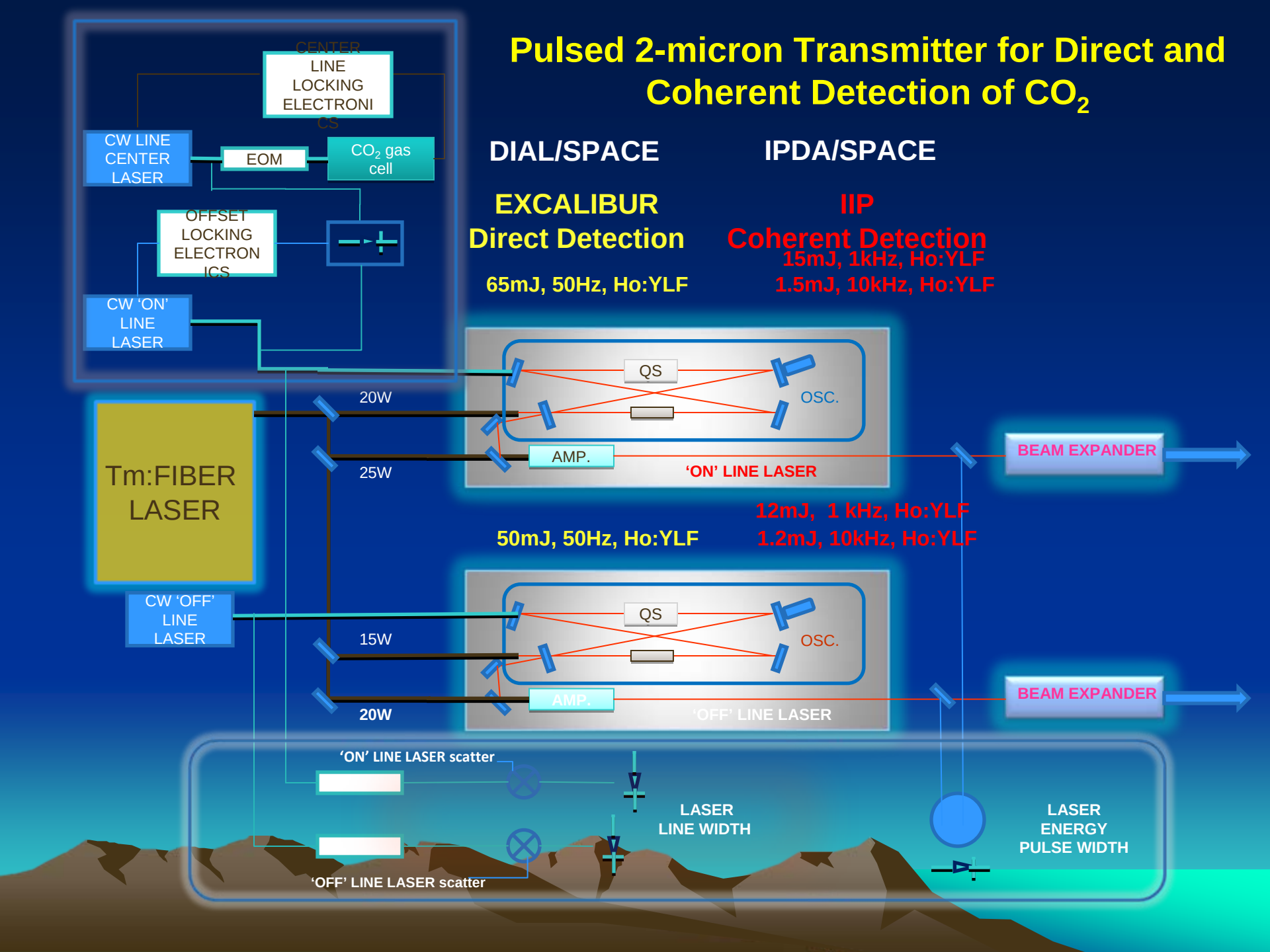

Thank you for your attention

