Gas Turbine Hybrid Technology at NASA

Exploit the advantages of the Gas Turbine, Electric Machines, and their Synergy when used together

2022 SciTech Panel Discussion on Gas Turbine Hybrid

Mark G. Turner
Senior Technologist, Aeropropulsion
Propulsion Division, Research and Engineering Directorate
NASA Glenn Research Center

January 3, 2021

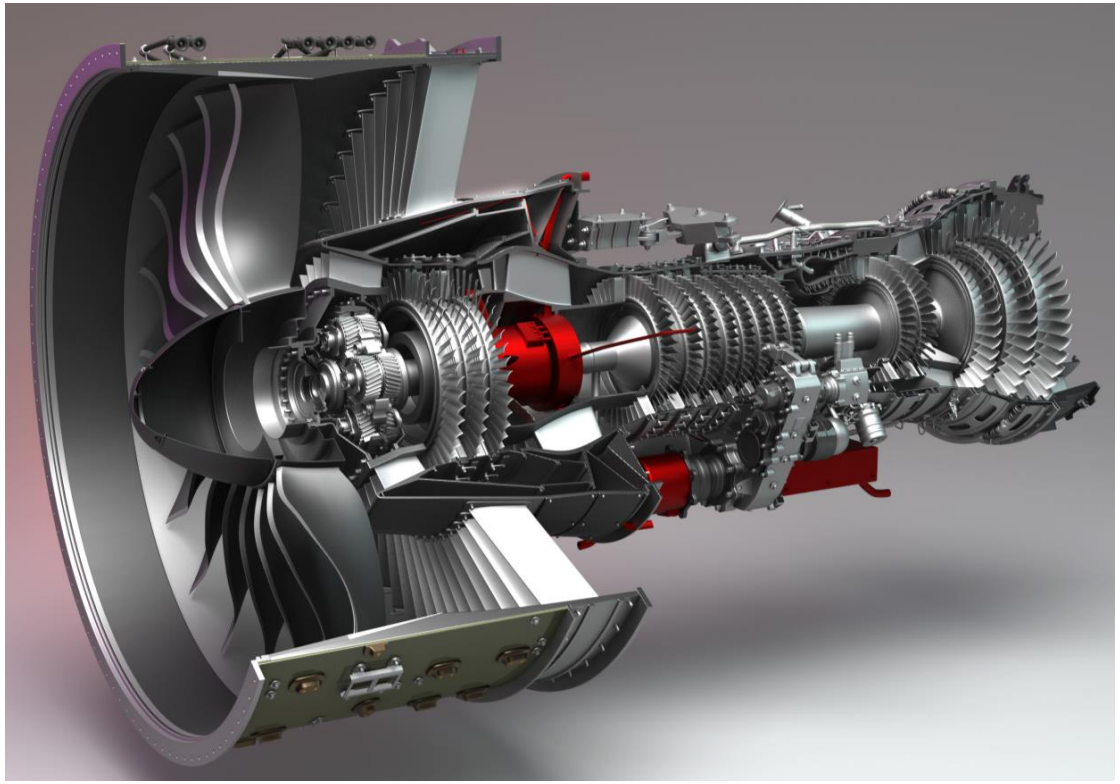

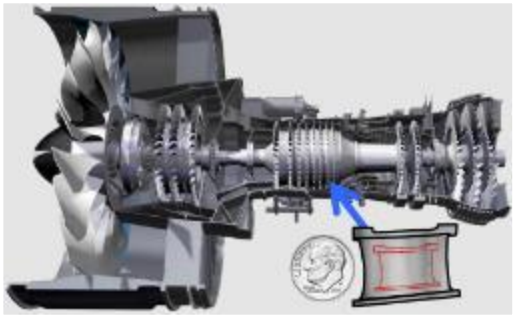

Small Core Gas Turbine

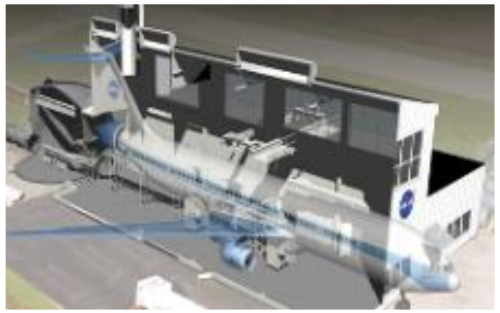

Electrified Aircraft Propulsion

Outline

- What is a Megawatt?
- Shaft Power
- Current NASA Hybrid and Electric Projects and Research
  - NASA Electric Aircraft Testbed (NEAT) at Neil A. Armstrong Test Facility (formerly Plum Brook Test Station)
  - Sustainable Flight Demonstrator (SFD)
  - Hybrid Thermally Efficient (Core) HyTEC project with Dual Spool Power Extraction, Improved core, and SAF
  - Electrified Powertrain Flight Demonstration (EPFD)
- Exploiting the Synergy
  - TEEM
  - Electric machines simulating hybrid electric
- SUSAN Electrofan Concept
- Conclusions

What is a Megawatt (MW)?

Average US household annual energy use is 11,000 kWhr/hr -> 1.25 kW Power on average so 1MW can power **800 homes** (neglects peak power needs)

- **1000 kW (kiloWatts)**
- **1,000,000 Watts**
- **P = E*I, 1 Watt = 1 Volt * 1 Amp**



15 Amp circuit at 120V = 1.8 kW



Chevy Bolt
66 kW-hr battery,
259 mile range,
150 kW motor (200hp)

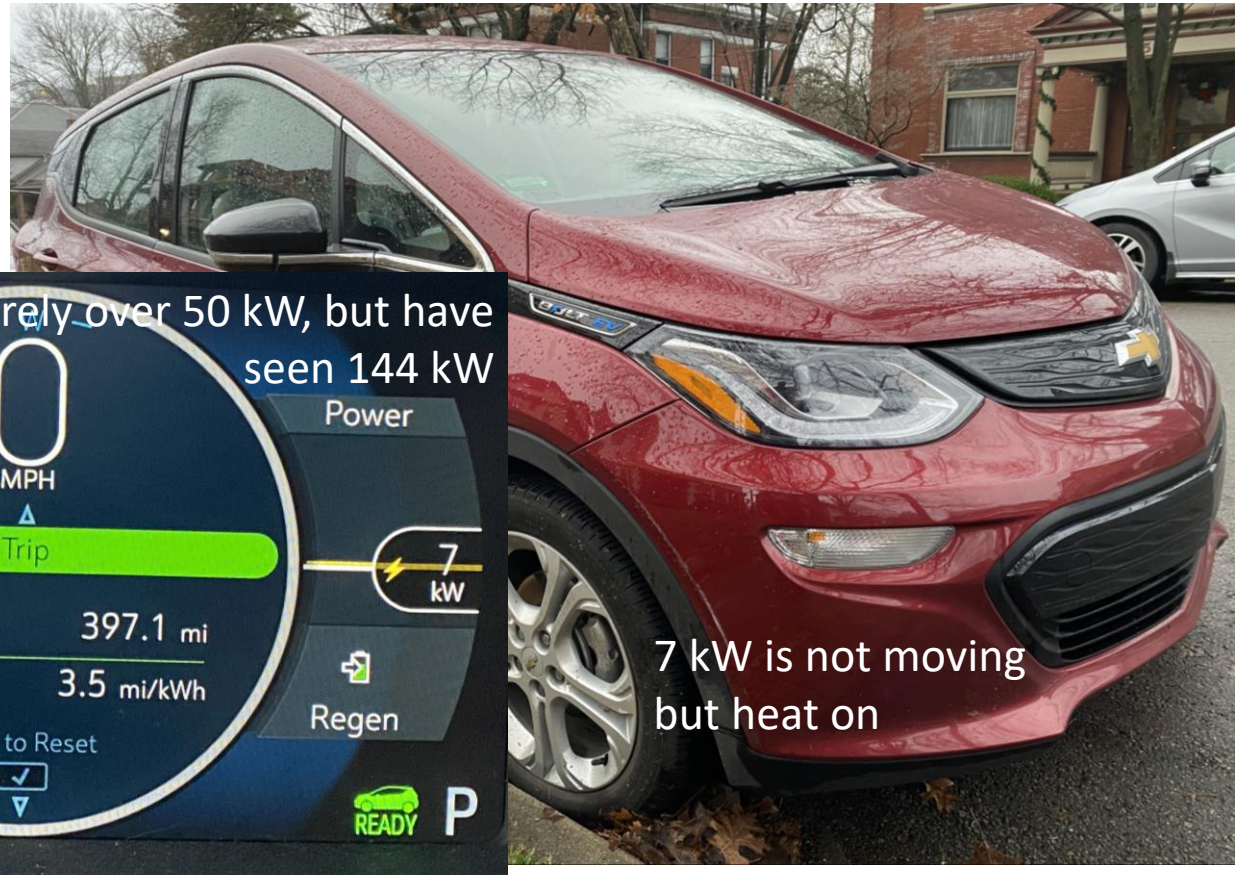

For 32 Amp Level 2 Car Charger at 240V= 7.7 kW

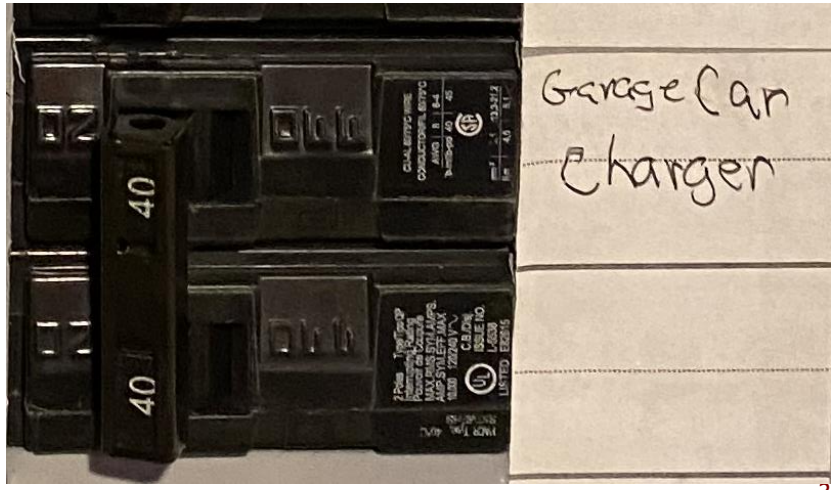

Shaft Power & Power Extraction in Notional TurboFan

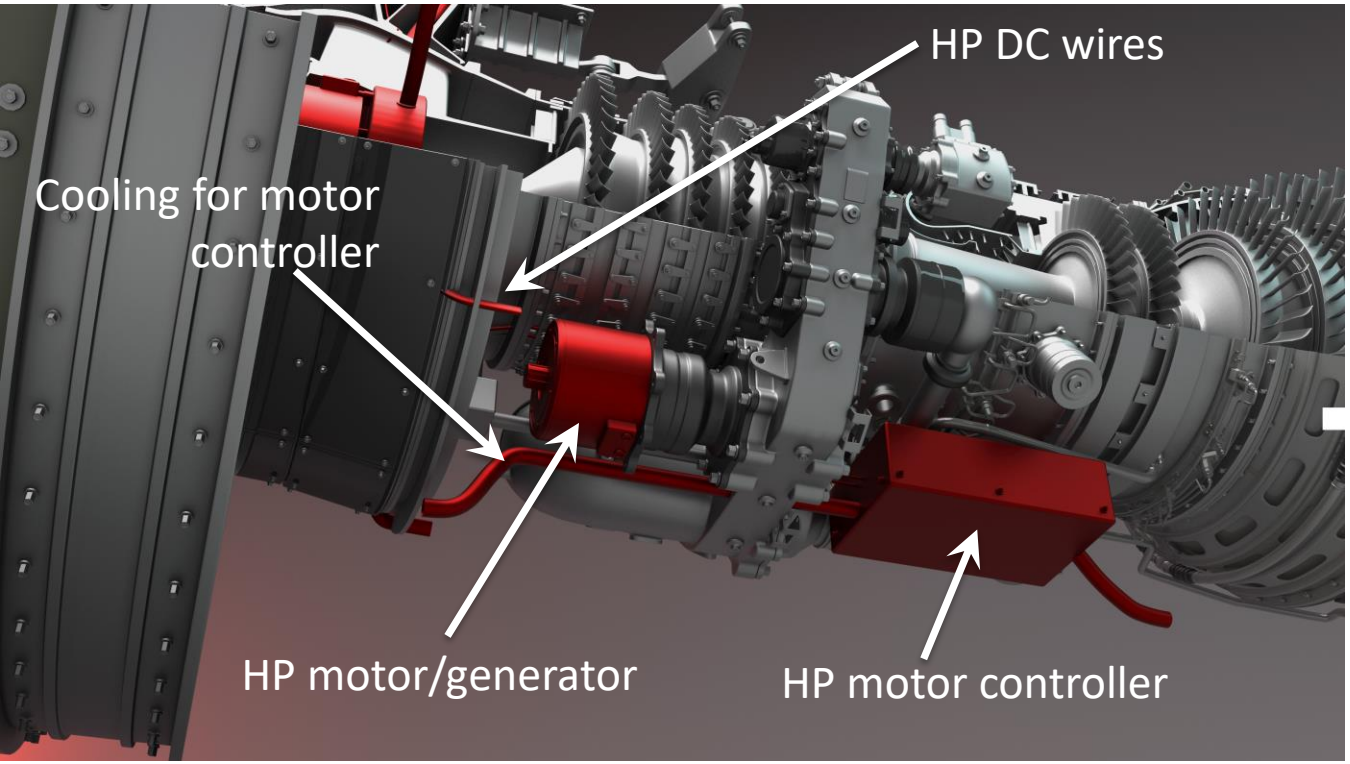

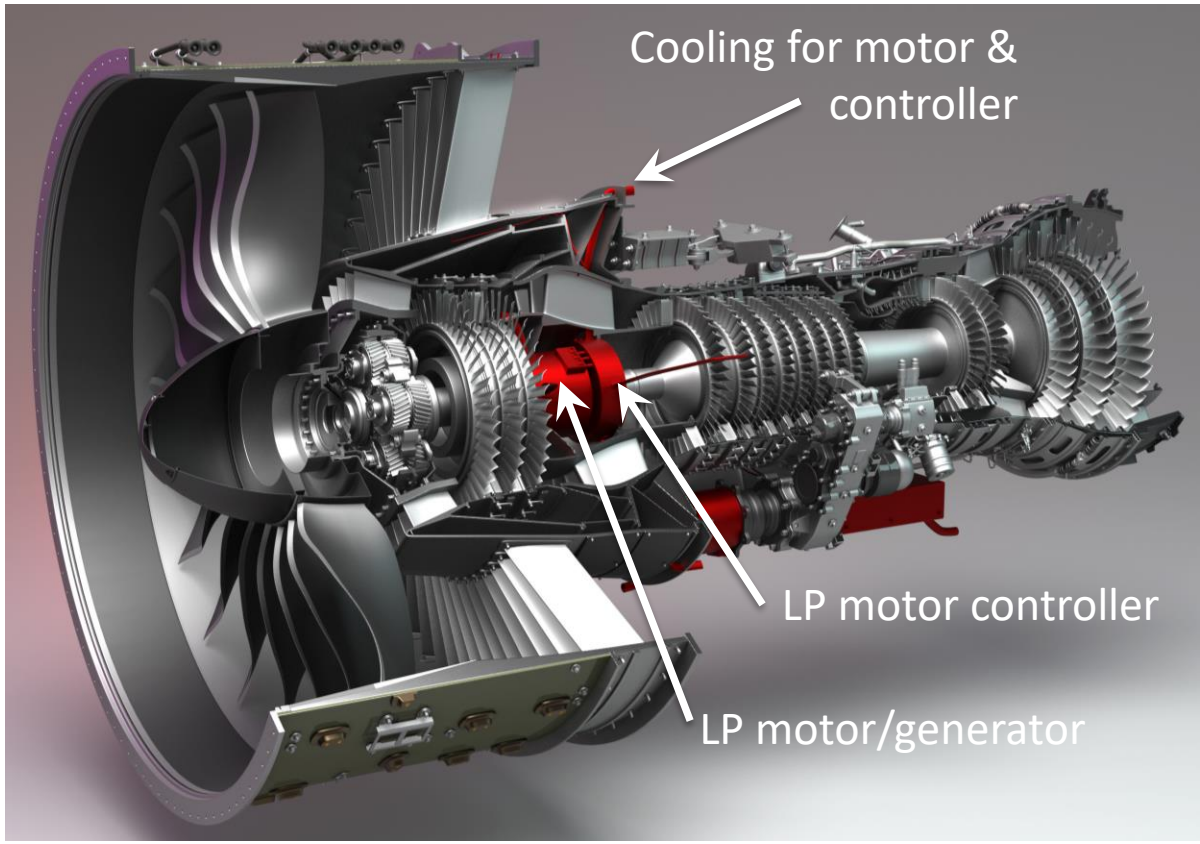

With Aircraft Power Extraction only and at Sea Level Hot Day:

Thrust: 37,100 lbf = 165 kN

HP shaft has 22,000 hp = 16.4 MW

LP turbine produces 36,300 hp = 27.1 MW

Fan uses 15,800 hp = 11.8 MW

This is for a large, modern Single Aisle Aircraft

NASA is making Trade Studies to optimize the amount of power to extract. Some studies show 1.4 MW total power extraction from this class of engine.

1 kW = 1.341 hp

NEAT Powertrain Lessons

Reconfigurable Powertrain Testbed for Fault Testing

- Located at NASA Neil A. Armstrong in the recently repurposed Hypersonic Tunnel Facility (HTF)
- Supports full-scale megawatt powertrain testing under realistic conditions (altitude up to 50,000 feet or sea-level testing with realistic electrical layouts for large wingspan aircraft).



TRL maturation:

- **High voltage bus architecture – Insulation, geometry, 600V up to 4500V**
- **High power MW Inverters, Rectifiers- Commercial, In-House, NRAs**
- **High power MW Motors, Generators- Commercial, In-house, NRAs**
- **System Communication – Aircraft CAN, Ethernet, Fiber-optics**
- **System EMI Mitigation and Standards – Shielding, DO-160G, MIL-STD-461**
- **System Fault Protection – Fuse, Circuit Breaker, Current Limiter**
- **System Thermal Management – Active/Passive, Ambient/Cryo**
- **Altitude Integration- Cosmic, creepage, partial discharge**

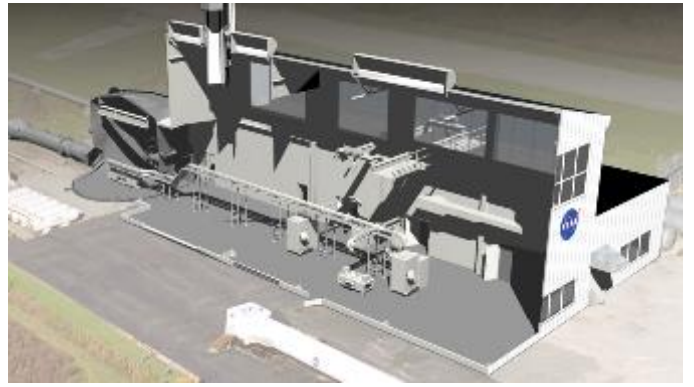

Powertrain Lessons Learned:

- **EMI shielding is critical for safe and proper operation of the powertrain even with DO-160G compatible equipment.**
- **Federated fault response with localized feedback/controls are important for orderly shutdown sequencing.**
- **System interactions between components must be tested to account for common modes, grounding loops, and resonant conditions**
- **Optical fiber and digital instrumentation are required for robust communication and sensors**
- **Higher voltage and current present new issues such as insulation resistance breakdown and power quality challenges when operating near rated equipment limits**
- **Shielding throughout the powertrain limits the ability to acquire data from transducers forcing calculated software measurements.**



Sustainable Flight National Partnership: Integrated Technology Development





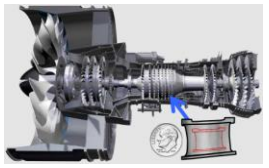



FY20 | FY21 | FY22 | FY23 | FY24 | FY25 | FY26 | FY27 | FY28 | FY29

Technology Readiness Target

Model Based Systems Analysis & Engineering

Sustainable Flight Demonstrator (SFD)

Flight Test

AATT - Transonic Truss Braced Wing

TC Completion

Leverage the Asset – Future Spirals

Hi-Rate Composite Aircraft Manufacturing (HiCAM)

Mfg Demo & Structural Test

Hybrid Thermally Efficient Core (HyTEC)

Core Demonstration & Test

Electrified Powertrain Flight Demonstration (EPFD)

Flight Test

AATT - Electrified Aircraft Propulsion

TC Completion

Planned

Notional

Achieve TRL 6 in time for Industry Product Decision-Making

Markets

- NASA is investing in research to enable Electrified Aircraft Propulsion (EAP).
  - NASA is working across a range of markets
  - The overarching strategy is to create enabling technology, demonstrate this technology in flight-test vehicles, and transfer the knowledge to industry for future products
  - Electrified aircraft propulsion has varying impact on air vehicle design depending on the key requirements of the market that the vehicle is intended to serve



Market: National/International

Impact: Fuel Burn/Emission Reduction



Market: On demand mobility

Impact: New mobility capability



Market: Regional

Impact: Revitalization of smaller routes

Focused Technologies for Electrified Aircraft Propulsion

Retire barrier technical and integration risks for megawatt-class electrified aircraft propulsion systems

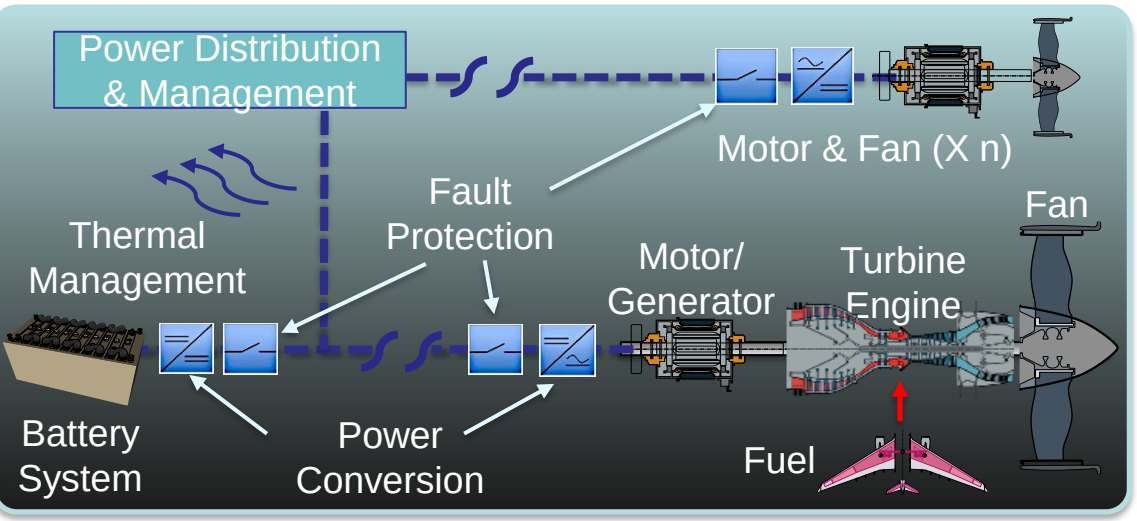



Address Key Barriers

- Mass
- Electrical losses
- Reliability
- EMI, power quality, dynamic stability
- Limits on DC voltage levels
- System design and integration

Approach

- Conduct technology-focused ground and flight tests
- Partner with industry on testing of electrified propulsion architecture
- Leverage prior electric aircraft propulsion advances (TRL ~4)

FOCUS ON KEY TECHNOLOGY CHALLENGES

AATT TC 10.1: Focused Technologies for EAP Demonstrator

Objective

Demonstrate representative hybrid electric powertrain having a total power of at least 3X the state-of-the-art (260 kW) that meets fault management, redundancy, and power quality requirements

(TRL 4, with key components developed to TRL 6, ~~FY22~~ FY23)

Technical Areas and Approaches

Mature EAP Powertrain technologies with purposeful commonality to EAP demonstrator

- Develop high power density, high efficiency components to TRL-6
- kV, MW, thermal and fault management, TRL-4
- Address barriers:
  - *Mass*
  - *Electrical Losses*
  - *Reliability,*
  - *Airworthiness*
  - *EMI, power quality, dynamic stability*
  - *Limits on DC Voltage levels*
  - *System Design and Integration*

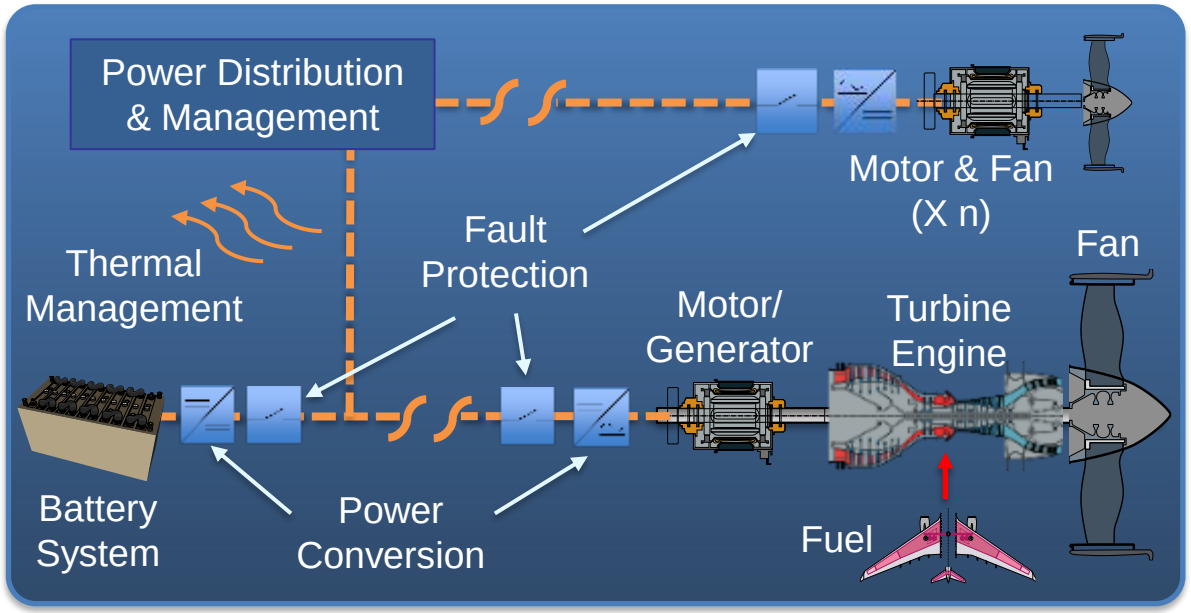

Benefit/Pay-off

Establishes solid technology basis for transport-class

- Flight-weight, flight-like components
- Feasibility for MW, kV EAP powertrains

Answers Question: “Can It Fly?”

Electrified Powertrain Flight Demonstration

Demonstrate integrated electrified powertrains in flight using industry platforms

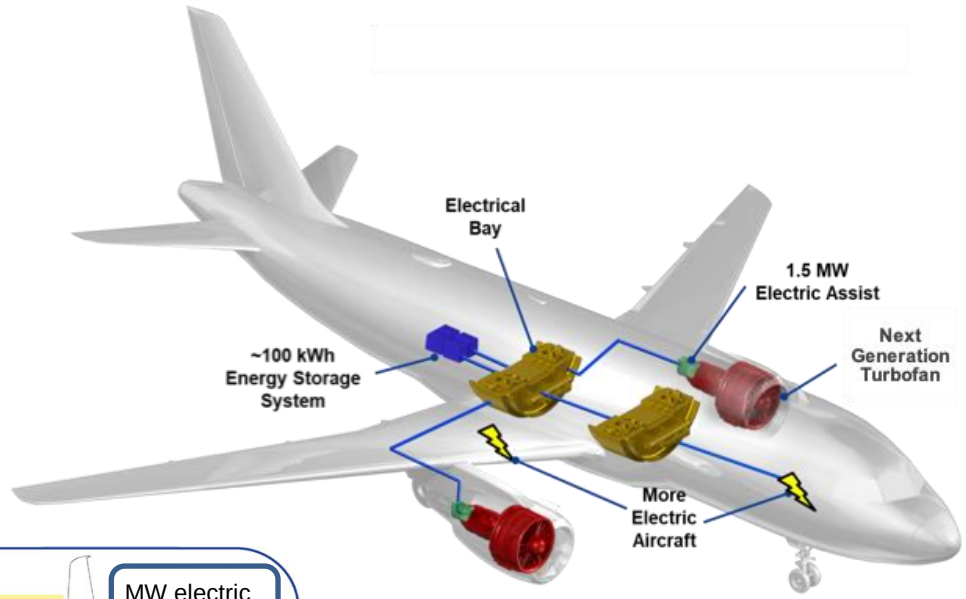

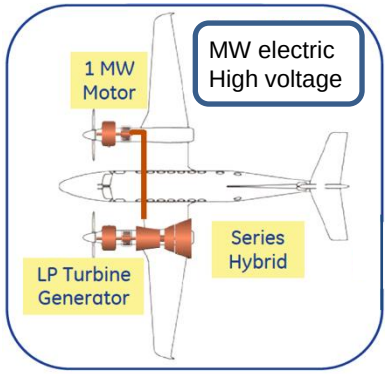

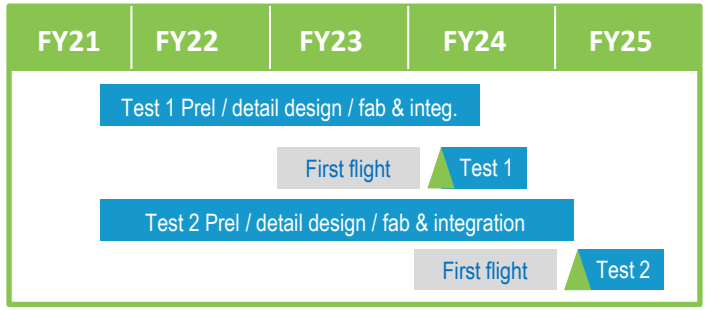

Requirement

- Demonstrate practical vehicle-level integration of megawatt-class electrified aircraft propulsion systems, leveraging advanced airframe systems to reinvigorate the regional and emerging smaller aircraft markets and strengthen the single aisle aircraft market.

Rationale/Impact

- Accelerate U.S. industry readiness to transition to Electrified Aircraft Propulsion (EAP)-based commercial transport aircraft.
- Identify and address barrier technical risks.
- Assess gaps in regulations/standards with the FAA, SAE, ASTM, etc to support future certification requirements.

Approach

- Engage with U.S. industry to integrate and demonstrate megawatt-class EAP machines in flight.
- Contribute data to inform standards and regulations.

FLIGHT DEMO CONTRACTS AWARDED

10

Flight Demonstrator Projects (Learn from Each)

X-57 All-Electric

Goal – Help develop certification standards for emerging electric aircraft market

- High aspect ratio wing enabled by high lift system, wingtip propellers
- Better cruise efficiency, zero in-flight carbon emissions, quieter flight

Mod II



Mod III



Mod IV



ELECTRIFIED POWERTRAIN FLIGHT DEMONSTRATION

Certification Goal: plan ground and flight test campaigns to provide appropriate data to establish standards to address gaps in certification requirements

- Lower operating costs, lower mission fuel burn with reduced carbon and nitrogen oxide (NOX) footprints, and reduced community noise
- Demonstrate practical vehicle-level integration of MW-class Electrified Aircraft Propulsion (EAP) systems, leveraging advanced airframe systems



Next Gen Transports: Integrated Technology Development

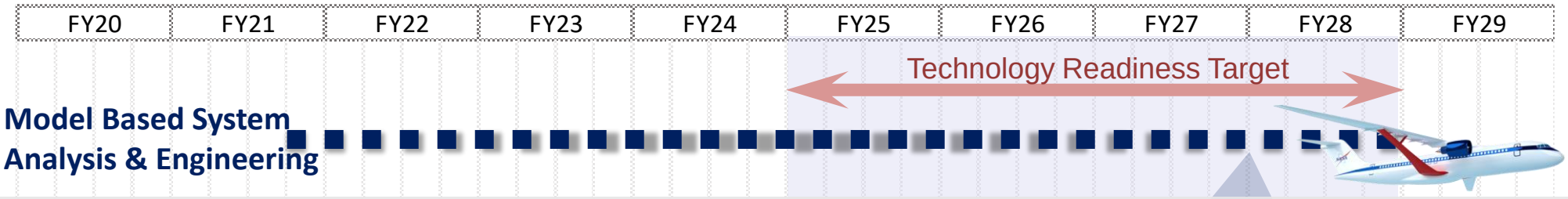

EPFD: Awarded contracts to General Electric and MagniX to accelerate integrated megawatt-class powertrain system maturation and transition to the global fleet. Efforts to help identify/address gaps in regulations/standards and acquire ground/flight test data to advance design/modeling tools.

AATT/Electrified Aircraft Propulsion: Testing underway at the NEAT Facility with industry partners in MW-class components and powertrains – advancing MW-class components to TRL 6 and powertrains to TRL 4 for further maturation in flight.



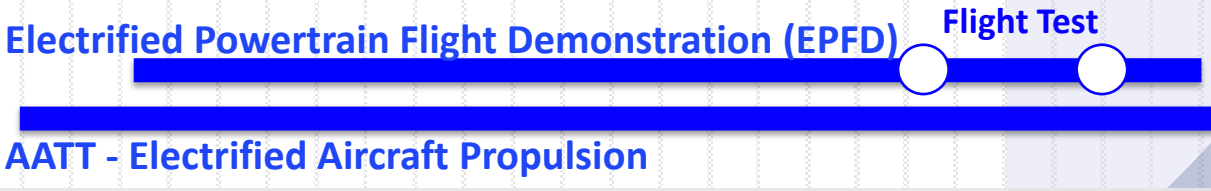

Hybrid Thermally Efficient Core

Accelerate development and demonstration of next generation small-core turbofan engine technologies

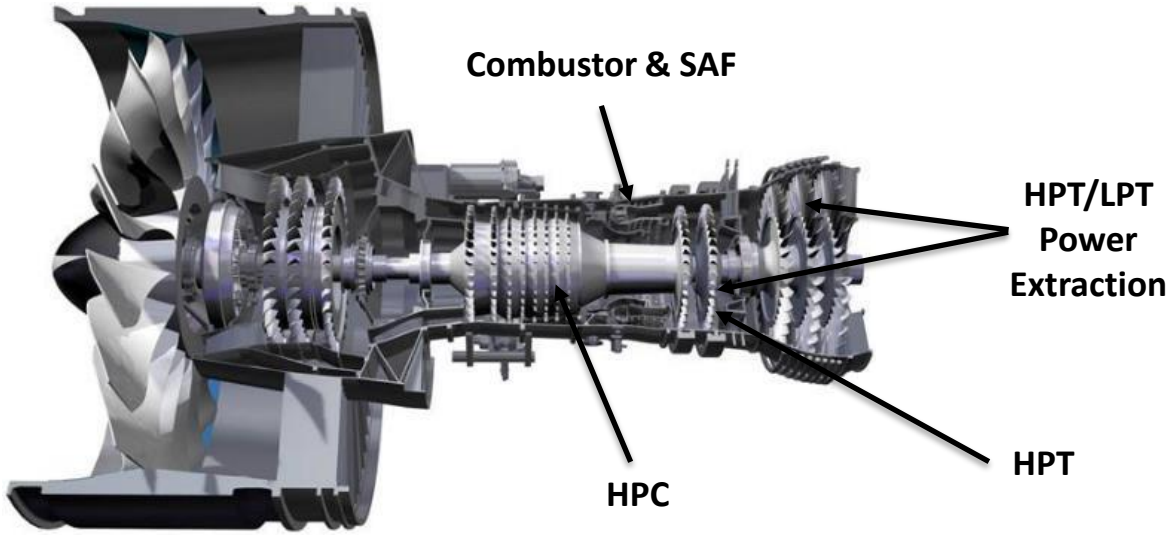

HyTEC
Hybrid Thermally Efficient Core

Requirement

- Achieve a **5 to 10% fuel burn reduction** versus 2020 best in class.
- Achieve **up to 20% power extraction** (2 to 4 times current state of the art) at altitude.

Rationale/Impact

- Reduce engine core size and facilitate hybridization.
- Lower environmental impact and reduce end-user cost.
- Invest in aggressive, impactful small core turbofan technologies with development risk.
- Technology improvements for efficiency, durability, performance, and hybridization.

Approach

- Partner with industry to mature and demonstrate promising technologies

PHASE 1 TECHNOLOGY DEVELOPMENT CONTRACTS AWARDED

Sustainable Aviation Fuels

Assess technology needs and impacts

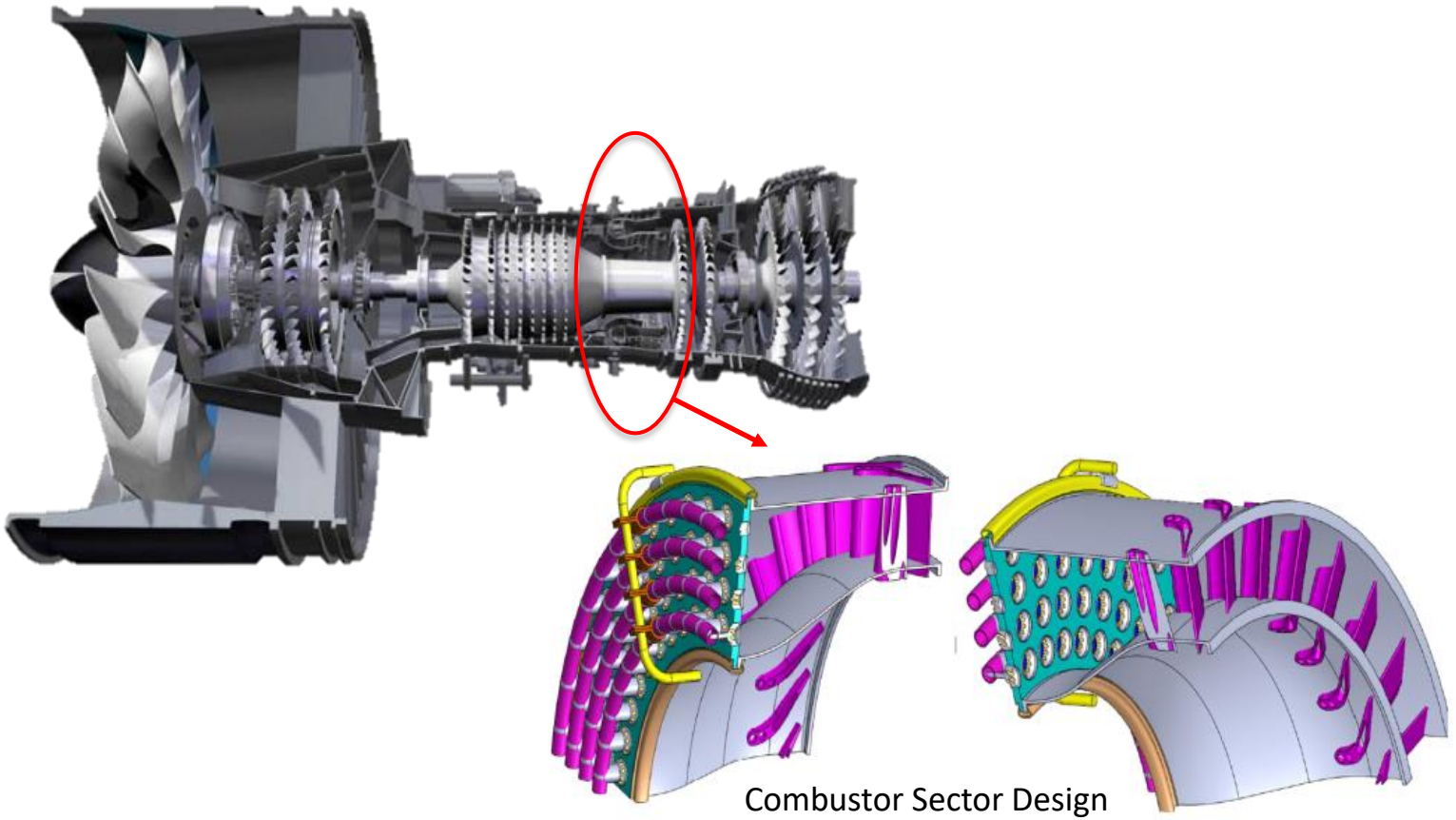

Combustor Sector Design

- Improved efficiency/emissions with drop-in synthetic and biofuels
- Reduces NET CO2 and non-volatile Particulate Matter (nvPM) (a cause of contrails)
- Enable adoption of high-blend ratio sustainable alternative jet fuels – advance small core combustor design and address advanced small combustor operability and emissions
- High-blend sustainable alternative jet fuel emissions characterization

FUTURE RESEARCH PLANS IN DEVELOPMENT

TEEM (Turbine Electrified Energy Management)

- TEEM is about managing energy in an electrified turbine engine propulsion system
  - Goal: Improve operability of the turbomachinery → enable better performing engine designs and/or enhance aircraft capabilities and safety
  - The Means: electric machines (EMs) coupled to the engine shaft(s)
    - EMs are new actuators that can alter engine operation
  - Superior Transient Operability Improved minimum stall margin during acceleration and tighter control of operating point on the map

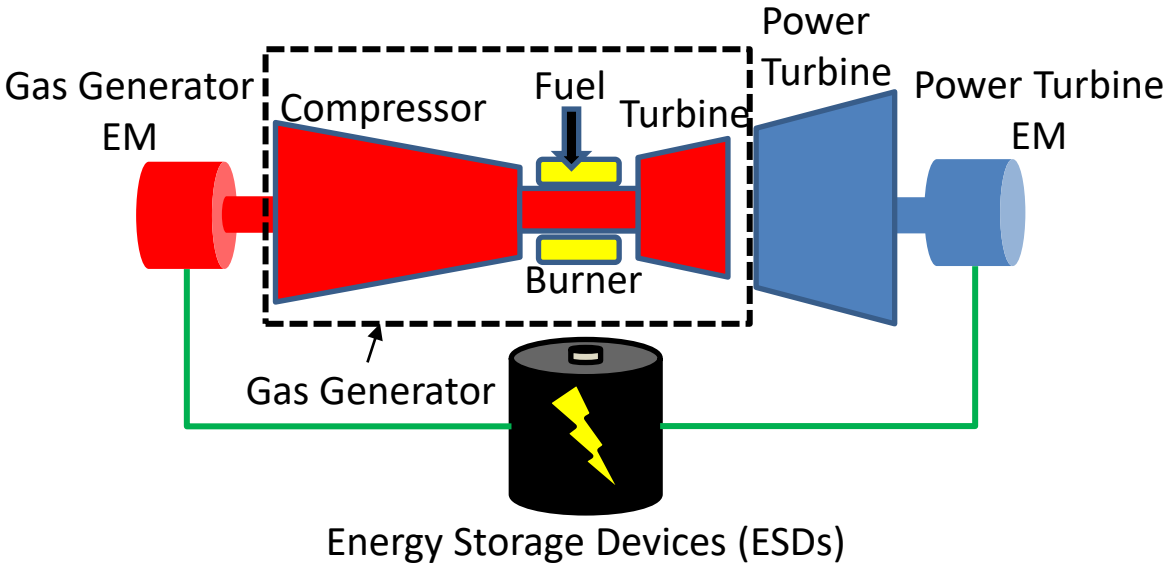

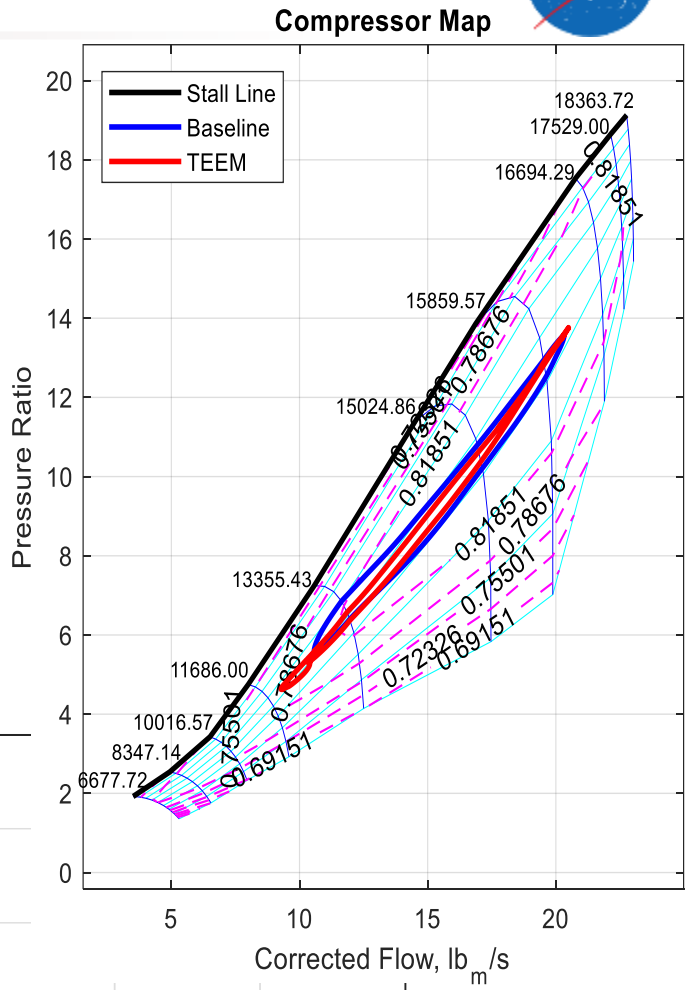

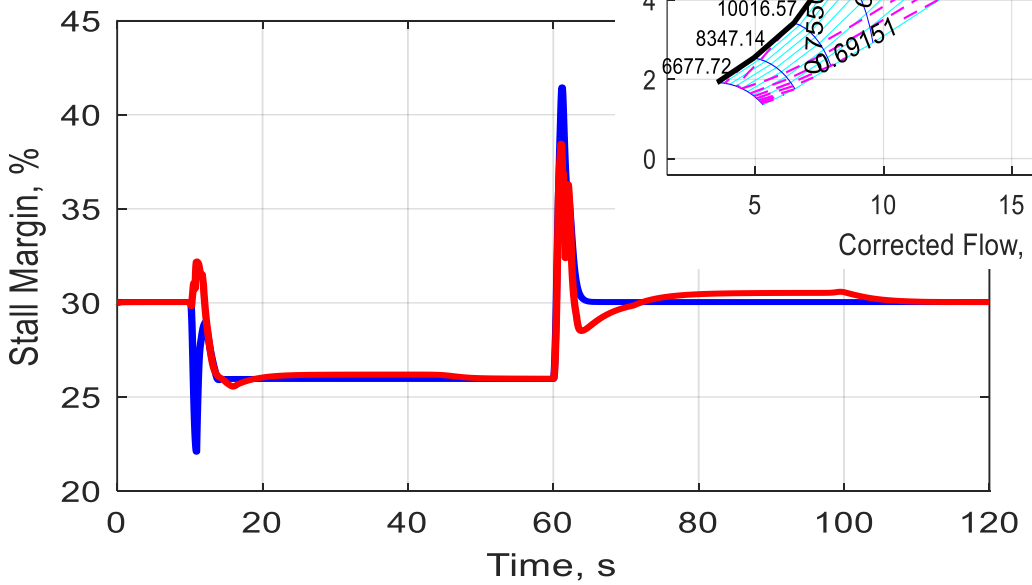

Electrified Gas Turbine Engine with Electrical Power System

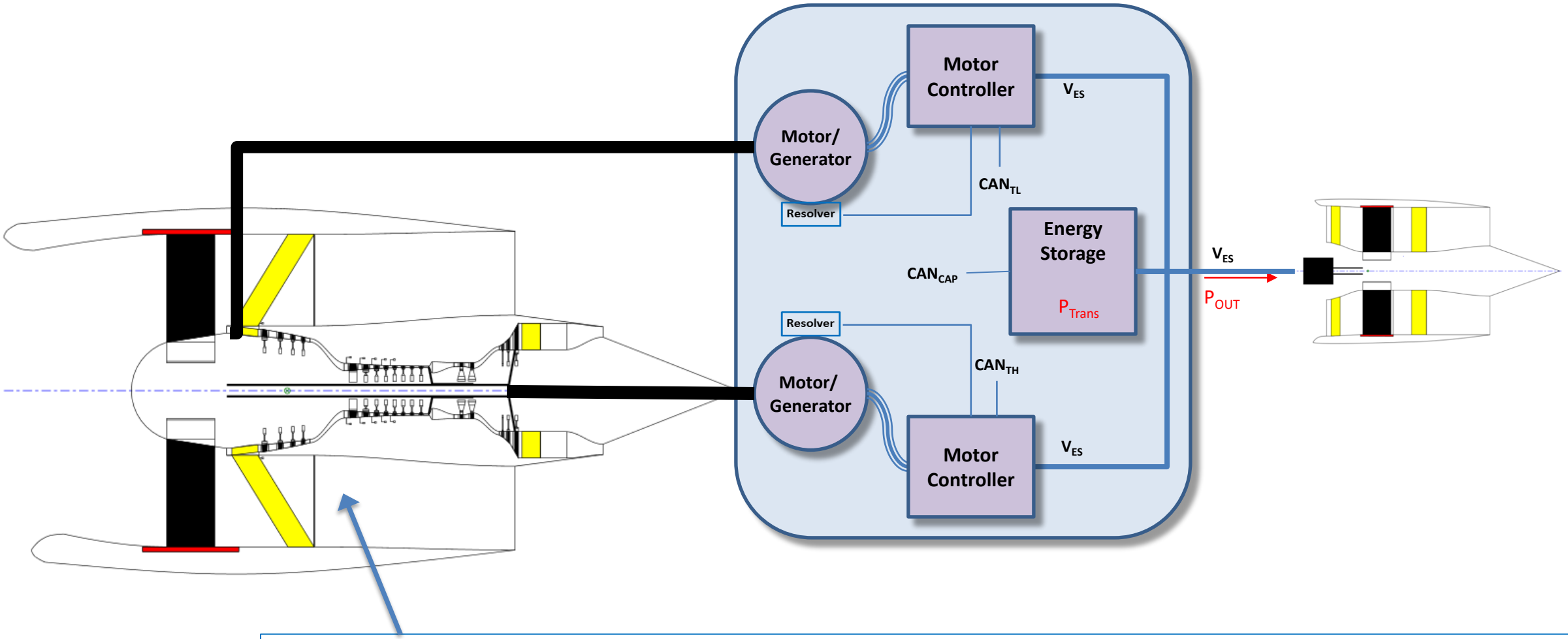

Gas Turbine Shafts can be simulated with Motors (occasionally as generators)

Simulator to Test Control Strategy

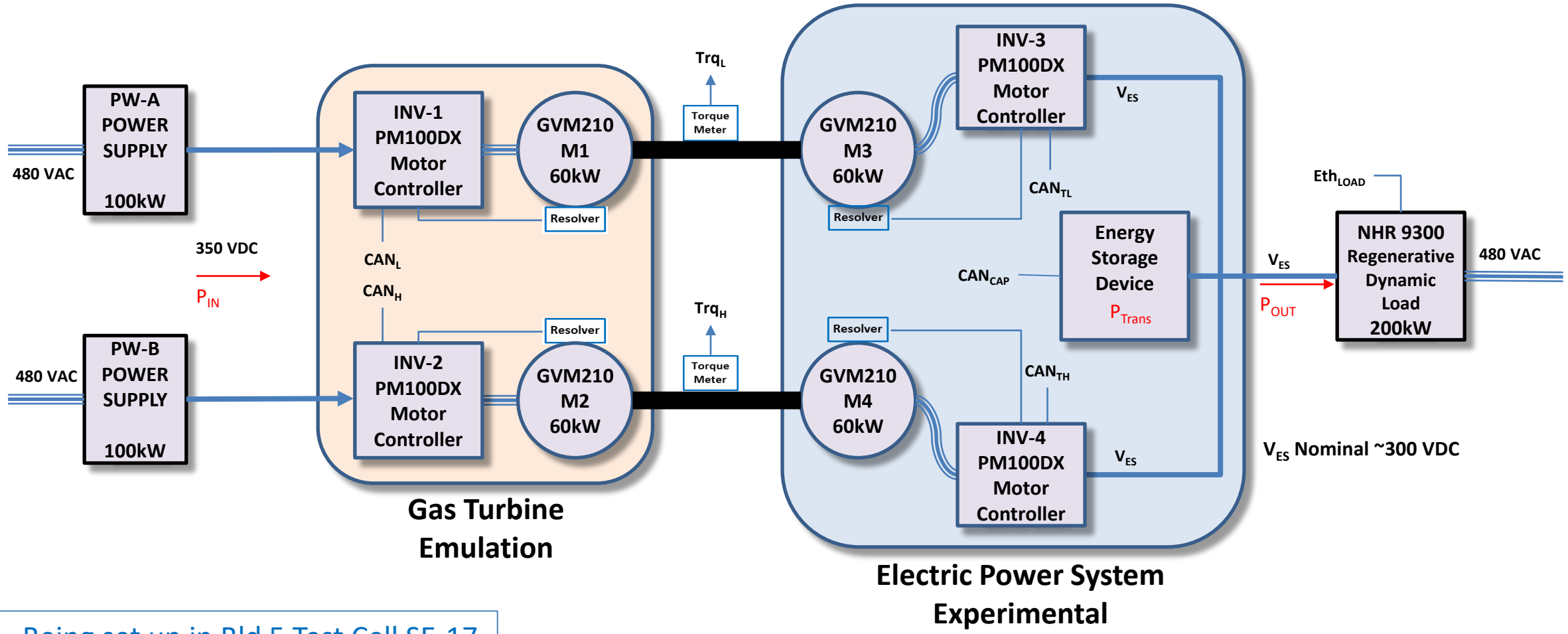

- Being set up in Bld 5 Test Cell SE-17
- Start this month
- Tests complete in Summer
- Configurable for other tests

Subsonic Single Aft eNgine (SUSAN) Electrofan Concept

- Special Sessions: Two Sessions on Thursday, Jan 6
  - 2:00-3:40 pm and
  - 4:00-5:40 pm
  - 10 total papers
- 2040 time frame entry into service

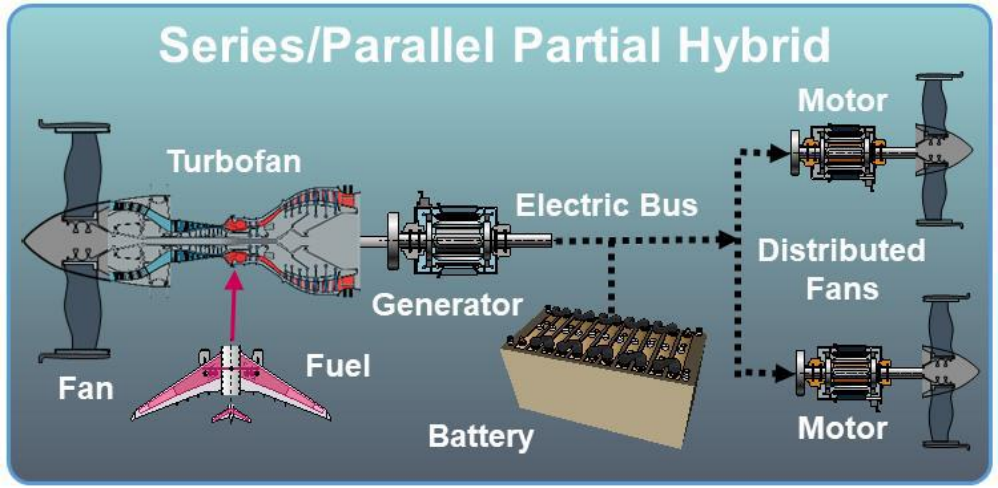



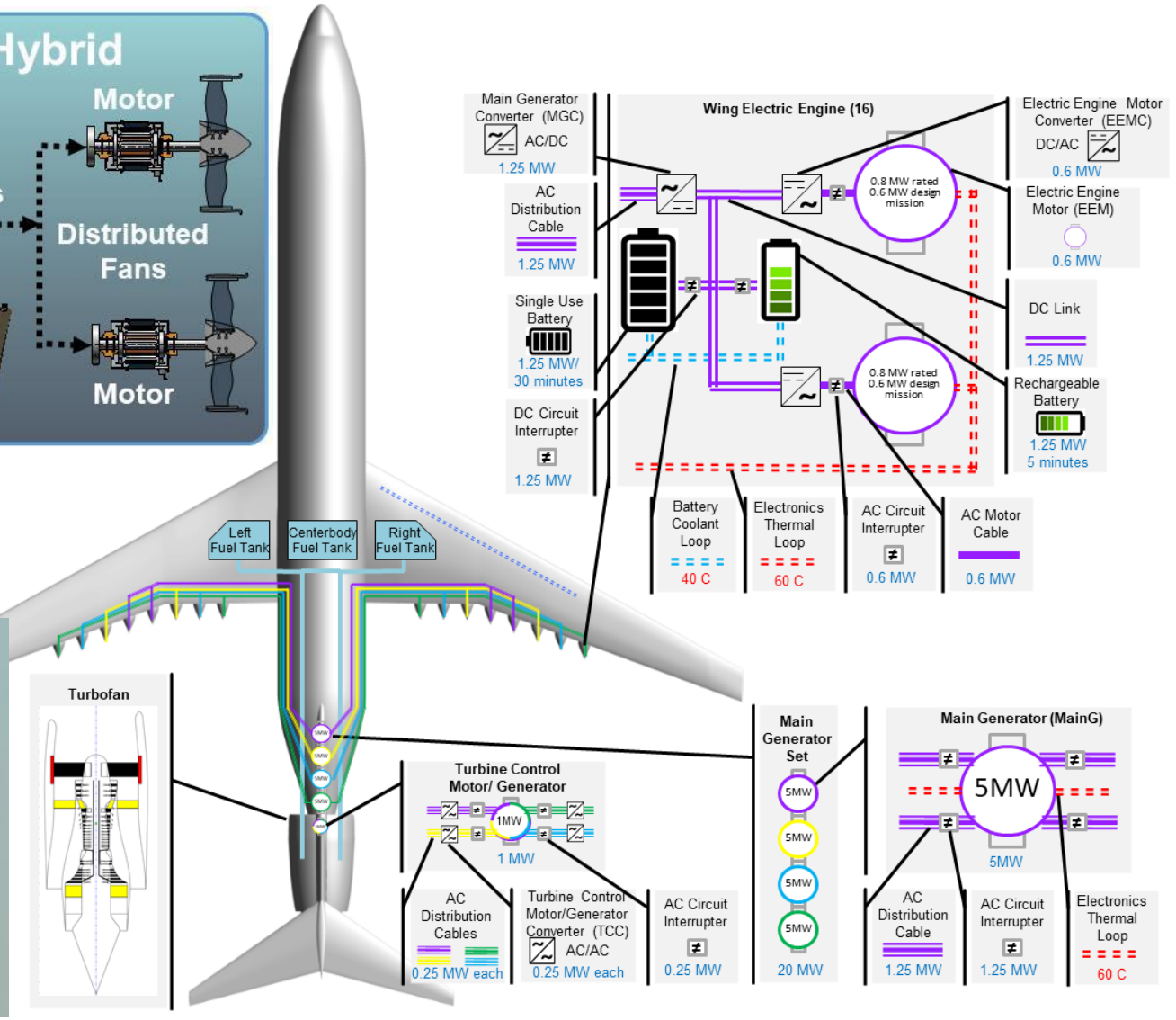

Figures from AIAA-2022-2306, Litt et al., "Implementation Approach for an Electrified Aircraft Concept Vehicle in a Research Flight Simulator"

Conclusions

- NASA has been active in research and supporting industry to push the amount of electrification in gas turbine engines and the TRL level
- Ground tests and flight tests in the near future will demonstrate these advancements for all the necessary technologies
- Ideas are already being explored to exploit hybridization even more such as with the SUSAN Electrofan Concept
- More Electrification can lead to more synergy such as with TEEM
- More electric power from gas turbines means:
  - Aircraft optimization needs to be closely integrated with engine optimization
  - The optimum engine requires true multidisciplinary thinking, analysis, and an open design space
  - We need engineers that are trained in overlapping disciplines: aero, structures, aeromechanics, acoustics, controls, motors, electric contollers, heat transfer, thermal management, heat engines, fuels, and batteries