The Use of Temperature Sensors for Liquid Hydrogen Testing at NASA Glenn Research Center

Johnson, W.L.[1], Kubiak, M.J.[1,2], Dombrowski, D.J. [1,2], Johnson, K.P.[1], Tesny, E.M. [1], and Carlberg, E.R.[1]
[1]NASA Glenn Research Center
[2]HX5 Sierra

NASA Glenn Research Center has been testing temperature sensors both internal and external to liquid hydrogen tanks for the past 70+ years. A range of sensors have been used including thermocouples, silicon diodes, and Cernox based Resistance Temperature Diodes (RTD). Different application processes for measuring the temperature of the hydrogen fluid, as opposed to solid materials, are used within a tank and within a pipe or hose. Sensors have been used as local wet/dry sensors to determine liquid height. Some of these applications have performed better than others, which is heavily influenced by how the sensors are handled and installed. This paper examines different temperature sensor performance and installation methods that have been used in liquid hydrogen applications at NASA Glenn Research Center and discusses lessons learned from different testing experiences.

1. Introduction

NASA Glenn Research Center has been safely using temperature sensors in liquid hydrogen systems since the mid-1950s. [1] These sensors have been used to measure temperature on systems below the triple point of hydrogen such as during the development of the X-33 and Integrated Ground Operations Demonstration Unit hydrogen densifiers, slush hydrogen activities [2,3] to measure liquid and vapor temperatures for many technology development activities at the Creek Road Cryogenic Complex [4], and as wet-dry sensors to verify liquid level.[5] Even with the measurement of temperature within a liquid, it is often found that measuring vapor pressure of the two phase fluid is much more accurate for determination of the saturation condition of the fluid than temperature sensors. This is due to the relative accuracy of pressure transducers and the sensitivity of saturation temperature as a function of pressure. However, the measurement of stratification within liquid or vapor phases of a two-phase system is inherently important to understanding the heat transport mechanisms within that two-phase system. As such, temperature measurements within hydrogen systems have been immensely valuable in the operation of technology development activities and operating experimental systems.

2. Temperature Sensor Types

Multiple different sensor types from multiple different vendors have been used in liquid hydrogen systems. Typically, for testing considerations, thermocouples (usually Type-E) are used where temperatures are expected to be above 70 – 100 K. While these thermocouples can be used down to 20 K, calibration of the thermocouple in the data system is required for achieving accuracy due to the limited sensitivity and resolution of the data system. However, thermocouples are often used in locations that may be below 20 K for emergency heater cut offs. If the location gets above a certain temperature (usually just above room temperature) the heaters will be automatically turned off before they can cause damage to the tank, insulation, or heater itself. This often is important when heaters are used to warm tanks up, such as in the Structural Heat Intercept, Insulation, and Vibration Evaluation Rig (SHIIVER) [ref 6 section 6.2.

For temperatures below 70 K, both silicon diodes and Cernox™ type Resistance Temperature Diodes (RTDs) have been used [5-7]. Silicon diodes have peak sensitivity below 30 K. While a diode does require

an activation current, the power dissipated by the sensor (on the order of a micro-Watt) is generally small enough to not be of concern. The packaging that is used depends on the location, attachment mechanism, and intent of the measurement to be made.

Other users have used Platinum RTDs when performing work for NASA [8]. For temperatures below approximately 100 K, they should be calibrated better than normal recommended practice in order to understand non-linear performance in that temperature range.

3. Temperature Sensor Uses

Temperature sensors have been used in three different types of locations: internal to a tank (both as temperature sensors and in wet-dry mode), external to a tank, and within a line. Due to more robust mounting methods, internal sensors have been found to be less likely to fail than external sensors. Internal sensors have been used for durations of many months on the same test and rakes are often reused for multiple tests.

a. Internal to tanks

Internal to tanks, NASA often uses temperature sensors to measure the temperature of hydrogen in liquid or vapor form. It is important to isolate the sensor from any supporting structure to make sure that the temperature of the fluid is actually being measured (as opposed to the temperature of the structure). In order to accomplish this, NASA GRC usually mounts the sensors such that the leads are supported through a FR-4 perforated board (see Figure 1) and the sensor does not touch the board or any metallic structure that the boards are attached to. Typically, the perforated boards are attached to a metallic structure in segments to minimize mechanical loads from differential contraction between the boards and structure.

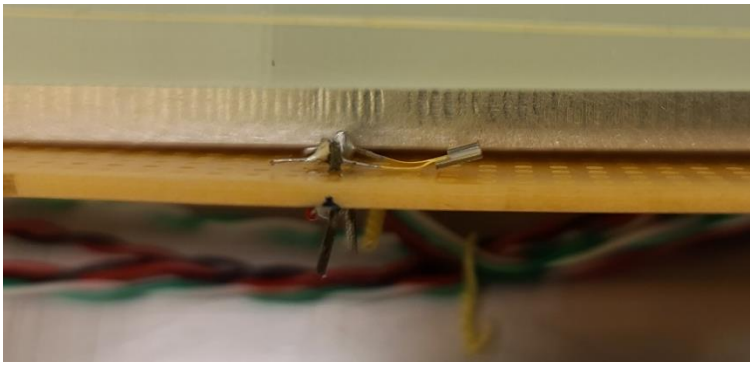

Figure 1: Image of a silicon diode mounted on a typical NASA GRC diode rake

Electrical feedthroughs can be purchased rated to 20 K or lower. NASA GRC typically uses Ceramtec [10] or Douglas [11] feedthroughs. The electrical wire used is Teflon™ insulated American Wire Gauge (AWG) 26. Care is made to ensure that there is sufficient wire length within the tank such that no mechanical load is ever put on the wire or insulation. The solder used is 63% tin and 37% lead with a rosin core to aid in the flow of the solder in such small applications.

b. Wet-Dry sensing

NASA GRC has developed methods of overpowering silicone diodes and Cernox™ RTDs to determine if they are within the liquid or surrounded by vapor [5,7]. The standard excitation current for a diode is 10 μA, however in wet-dry sensing mode, a higher current (approximately 1 mA, but it can be higher) is applied to the sensor. Once the current is returned to normal, if there is a rapid change in measured voltage, then the sensor is rewetting and within the liquid; if the change in voltage is small, then the sensor

is taking much longer to cool and within vapor. Dempsey and Fabik discuss this implementation for silicon diodes in Ref 5 and Metzger and Zimmerli discuss performance at multiple conditions for both silicon diodes and Cernox™ in Ref 7. When using sensors in wet-dry mode, the smallest sensors possible should be used. Sensors used during SHIIVER testing did not work in wet-dry mode and it is postulated that this was due to the thermal mass of the cylinder can type that was used [6].

Sensors can be used in both wet-dry and temperature sensing modes if electrical boxes that can be modulated between the nominal 10 μA and 1 mA can be fabricated. GRC makes custom switching cards that allow this modulation in real time during testing to reduce the need for separate sensors.

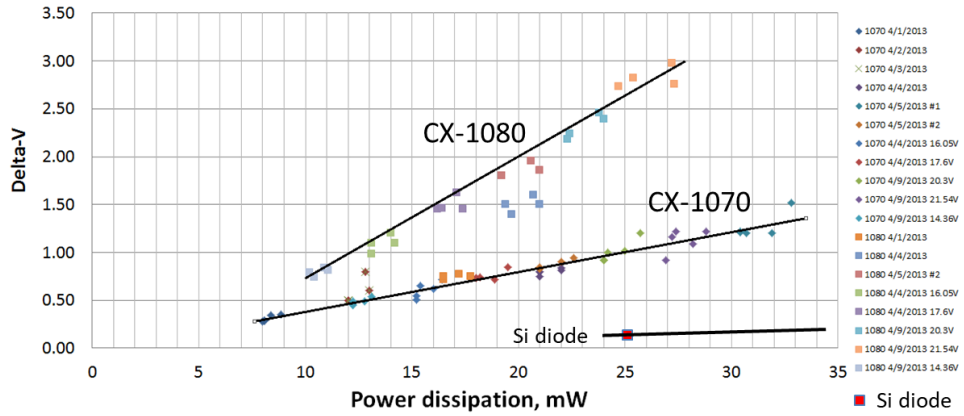

Figure 2: Differential voltage (delta-v) as a function of power dissipation for silicon diodes and Cernox™. [7]

c. Internal to lines

Three different mounting mechanisms have been used internal to lines. When using any of these methods it is important to make sure that conduction down any supports is accounted for and that flow forces on the sensor, both steady and resonant are considered. Standard probes where the temperature sensor is contained with a welded shut tube have been used. These types of integration methods are readily available from industry. Two novel solutions have been developed at NASA GRC. One internally developed option is where the temperature sensor is soldered onto a two-pronged electrical VCR feedthrough. This allows the sensor to be within a line, but not necessarily exposed to the flow. These sensors have been repeatedly used in line testing such as ref 12. The left side of Figure 3 shows a cutaway of a silicon diode installed in this manner. A second option is a solution where sensors in a can-type container were epoxied into a tube. Two different types were made, a single can in a 3 mm tube and dual cans in a 6 mm tube. The epoxy solution did have to be fully filled and then patched after a leak developed during initial coldshock. However, once it was patched, there were no more observed problems with leaks. These sensors were used in multiple locations to measure gas flow temperature in the vent and vapor cooling systems of SHIIVER. The right side of Figure 3 shows these sensors installed in the vent line of the SHIIVER test hardware.



Figure 3: Probe style internal fluid mounting mechanisms: on a electrical VCR connector (left) and epoxied into a tube (right).

d. External to tanks

Sensors are also used externally to tanks to measure the temperature of the tank wall, penetrations to the tank (for calculation of heat loads), and other hardware mounted to the tank. NASA GRC uses Stycast 2850 FT as a high thermal conductivity, low electrical conductivity epoxy for mounting sensors. Care must still be used for avoiding strain on the wires, especially if Phosphor-Bronze wires are used. Often strips of tape (with a protective non-stick surface on the middle) are used to hold sensors in place while the epoxy cures. Additionally, the sensors should be protected from any mechanical impact or thermal heating (especially if spray foam is used on top of them – the foam curing process is exothermic) that can overheat the sensors and cause damage.

e. Wired in Series

While most publications suggest either two or four wiring situations depending on the allowable uncertainty of the temperature sensor, it is possible to have a three-wire application. In the three-wire application, the excitation path of the sensors are wired in series so that the same current passes through them all. This requires that the current source be able to handle the appropriate voltage drop and also, if any diode faults, all readings in that chain are lost. GRC has experience wiring up to six silicone diode temperature sensors in series in this manner for liquid hydrogen systems [4]. Both leads for the voltage measurement are still required, but it does allow for combination of the excitation leads requiring fewer current supplies and electrical passthroughs. Figure 4 shows wiring diagrams for all three wiring options.

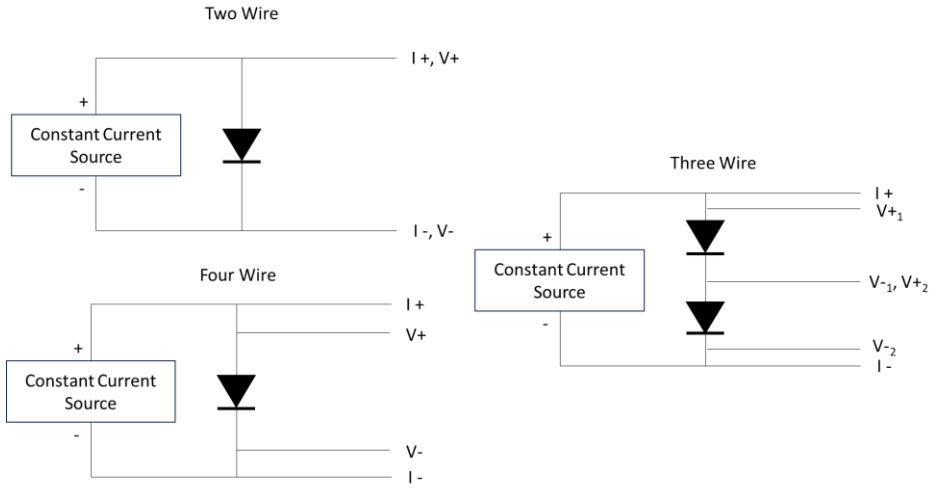

Figure 4: Wiring diagrams for the different wiring options.

4. Summary

NASA Glenn Research Center has safely used multiple different temperature measurement sensors in and around hydrogen systems over the last 70 years. The use of these sensors has become routine within the testing community, especially at the Creek Road Cryogenic Complex. The sensors can be used to measure temperatures within a tank, on a tank wall, or within a fluid line. Additional ways to use the sensors, such as liquid level sensors and sensors wired in series have also become standard use.

References:

1 J L Sloop, “Liquid Hydrogen as a propulsion fuel, 1945 – 1959”, NASA SP-4404, 1978.
2 N B McNelis, T L Hardy, M V Whalen, M T Kudlac, M E Moran, T M Tomsik, and M S Haberbusch, “A summary of the Slush Hydrogen Technology Program for the National Aero-Space Plane”, NASA TM-106863, 1995.
3 A M Swanger, W U Notardonato, J E Fesmire, K M Jumper, W L Johnson, and T M Tomsik, “Large scale production of densified hydrogen to the triple point and below”, IOP Conf. Series: Material Science and Engineering 278 (012013), 2017.
4 J Hartwig, W Johnson, H Bamberger, M Meyer, J Wendell, J Mullins, R C Robinson, and L Arnett, “NASA Glenn Research Center Creek Road Cryogenic Complex: testing between 2005-2019”, Cryogenics 106, 103038, 2020.
5 P J Dempsey and R H Fabik, “Using Silicon Diodes for Detecting the Liquid-Vapor Interface in Hydrogen”, NASA TM-105541, 1992.
6 W L Johnson, R Balasubramaniam, R Hibbs, G A Zimmerli, M Asipauskas, S Bittinger, C Dardano, and F D Koci, “Demonstration of Multilayer Insulation, Vapor-Cooling of Structure, and Mass Gauging for Large-Scale Upper Stages: Structural Heat Intercept, Insulation, and Vibration Evaluation Rig (SHIIVER) Final Report, NASA TP-20205008233, 2021.
7 S Metzger and G A Zimmerli, “Wet-Dry Level Sensor Test Data Summary Report”, CPST-RPT-0158, 2013.
8 C D Bunge, “A high-fidelity, continuous ortho-parahydrogen measurement and conversion system”, Ph D Dissertation, Washington State University, 2021.
9 W L Johnson, R Balasubramaniam, and S Bittenger, “Technology Demonstration Mission (TDM) Evolvable Cryogenics (eCryo) Project: Structural Heat Intercept, Insulation, and Vibration Evaluation Rig (SHIIVER) – Test Plan”, eCryo-PLN-0079, 2020.
10 https://www.ceramtec-industrial.com/en/products-applications/hermetically-sealed-components, accessed April 4, 2025.
11 http://www.douglaselectrical.com/, accessed April 4, 2025.
12 J Hartwig, J Styborski, B Stiegemeier, J N Chung, E Rame, and J McQuillen, “Liquid hydrogen line chilldown experiments at high Reynolds numbers. II. Analysis” IJHMT vol 156, 119805, 2020.