

Development of NASA 2.7% Semispan High Lift Common Research Model

07/30/2025

Miranda L. Ertsgaard, NASA Langley Research Center
Courtney S. Winski, NASA Langley Research Center

2.7% CRM-HL Introduction

National Aeronautics and Space Administration



- 2.7% Full Span and Semi-Span Models were designed, analyzed, and fabricated as part of a large-scale multi-year effort with support from multiple organizations
- Third in a fleet of NASA CRM-HL wind tunnel models among an international ecosystem that supports the High Lift Prediction Workshop; CRM-HL test articles are unique to the ground testing community in their modularity, complexity, and open-source nature



CAD Rendering of 2.7% CRM-HL Full Span Assembly

Wind Tunnel Testing

National Aeronautics and Space Administration

- Designed for Reynolds number effects testing and CFD validation in support of High Lift Prediction Workshop (HLPW)
- Will be tested in cryogenic facilities such as NASA Langley Research Center (LaRC) National Transonic Facility (NTF) and European Transonic Wind-tunnel (ETW) later in CY25

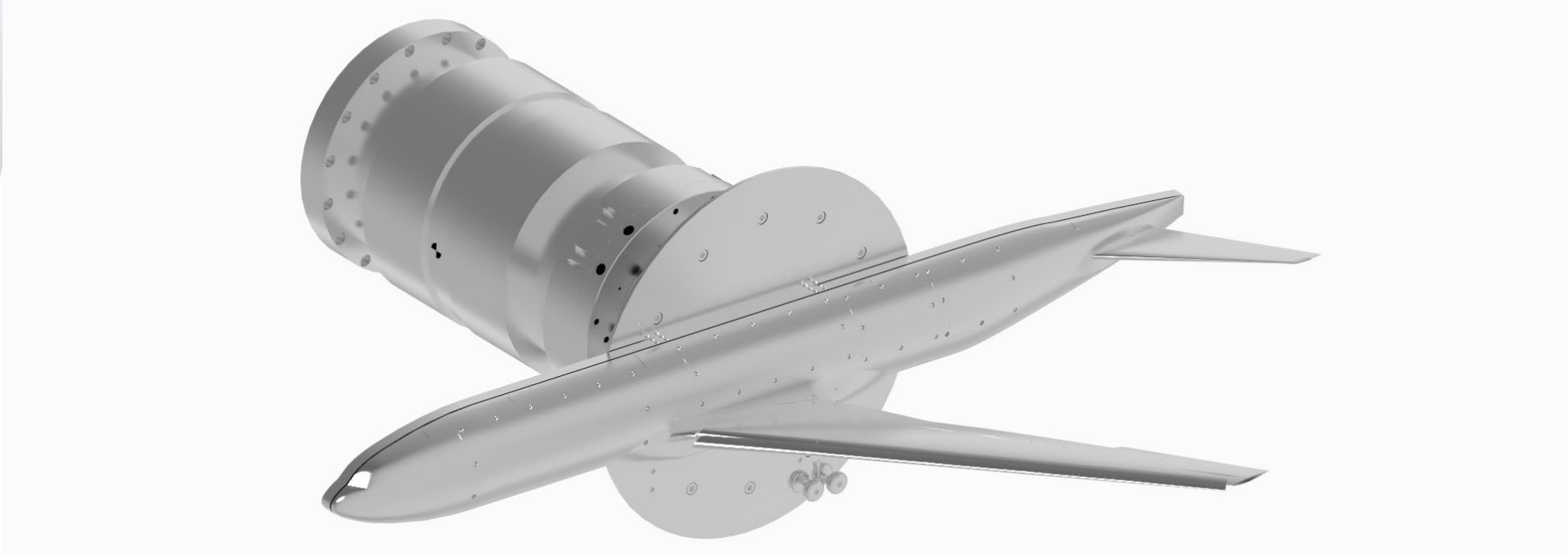

CAD Rendering of 2.7% CRM-HL Semi-Span Assembly

Requirements: Test Conditions

National Aeronautics and Space Administration



- Temperature Range: -250° F to 120° F
- Dynamic Pressure: 525 psf (conditioning at 586 psf)
- Angle of Attack (AoA) Range: -4° to 22°
- Operations: Air or Nitrogen
- Surface Finish: 8 micro-inches Root Mean Square (RMS) or better on all flow surfaces
- Maintain upper Outer Mold Line (OML) and minimize leak paths
- Repeatability: Provisions for pinning interfaces
- Longevity: Ultrasonic inspections providing AAA certificates of conformance
- Compliance: NASA Technical Standard 8719.28, Wind Tunnel Model Systems Criteria

Requirements: Full Span

National Aeronautics and Space Administration

- The Full Span 2.7% CRM-HL was designed to be tested in the takeoff and landing configurations with the ability to test with the landing gear and nacelle-pylon off

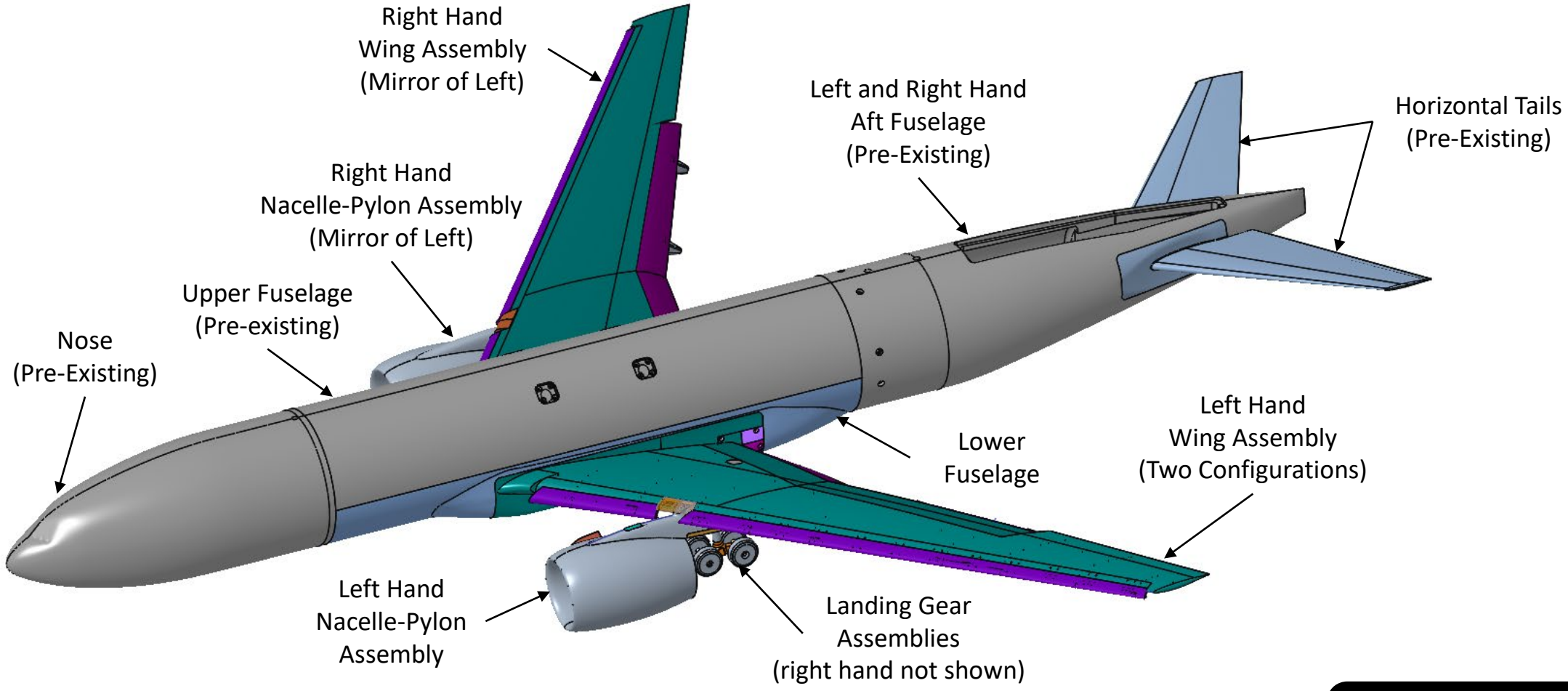

Requirements: Wing Configurations

National Aeronautics and Space Administration

- The trailing edge was designed as a separate part to support machining and instrumentation
- The nacelle-pylon and inboard flap have dynamic pressure transducers installed in them making it difficult to perform model changes

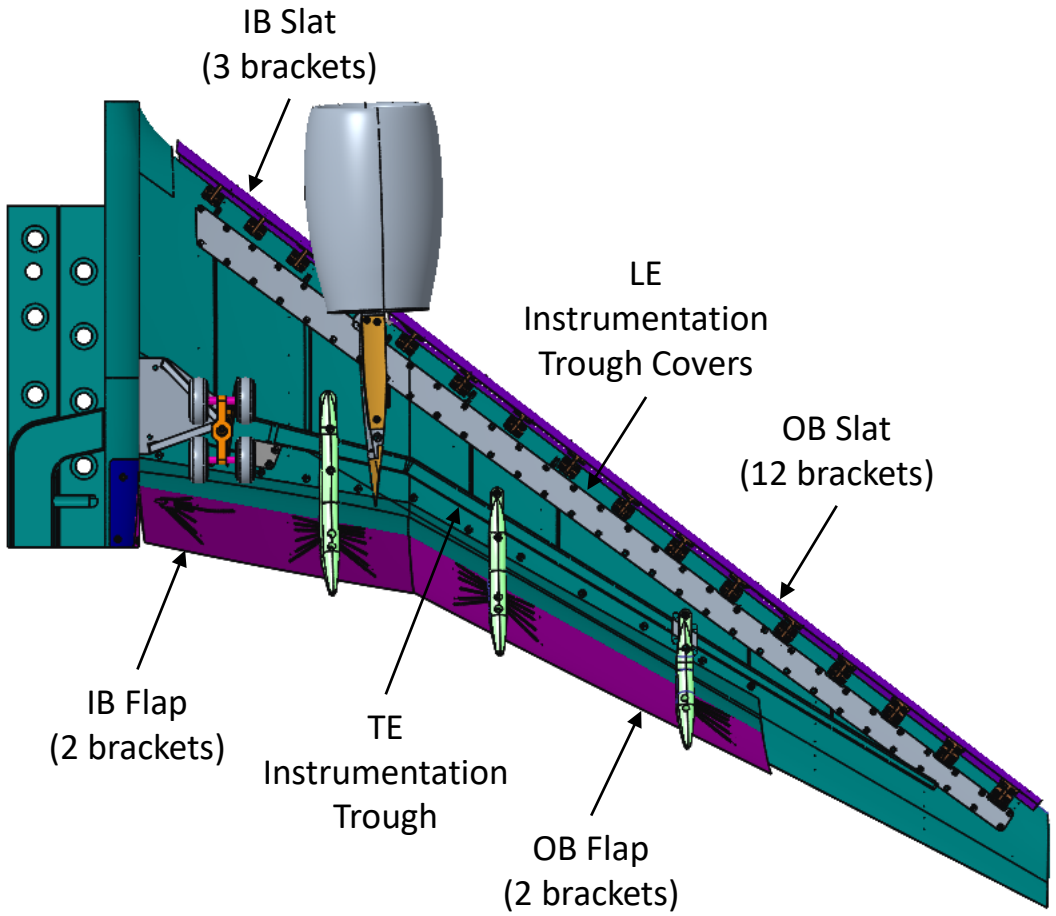

PART	TAKEOFF CONFIGURATION	LANDING CONFIGURATION
IB FLAP	25°	40°
OB FLAP	25°	37°
IB & OB SLATS	22°	30°

Not Shown: Landing gear off plate and nacelle-pylon filler

Requirements: Semi-Span

National Aeronautics and Space Administration

- 2.7% CRM-HL semi-span was new to the NTF, which had never supported a semi-span model this small; new mounting block, spool, two-piece turntable, and ESP package were designed
- New fuselage and standoff were designed to create a one-inch labyrinth seal between the tunnel wall and the model

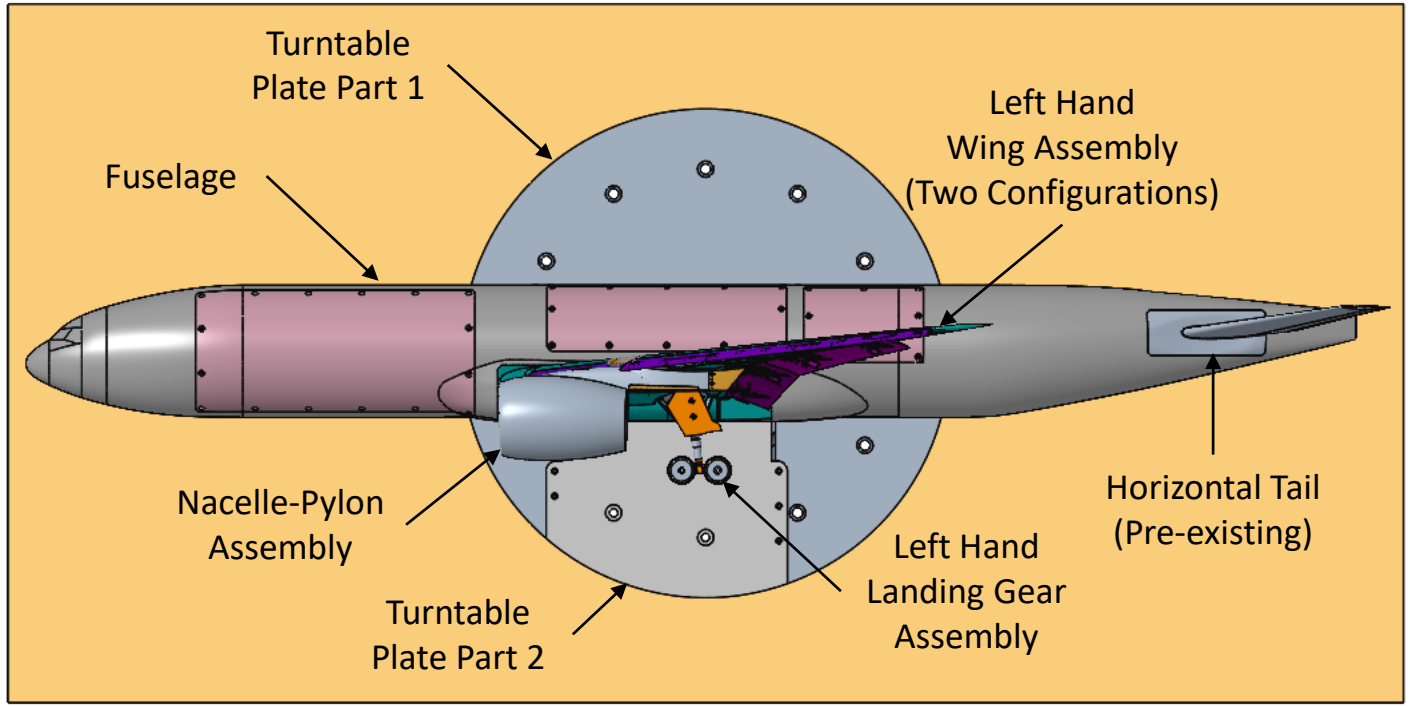

Requirements: Instrumentation

National Aeronautics and Space Administration

- NTF-117S Semi-Span Wind Tunnel Balance and NTF-118A Full Span Wind Tunnel Balance
- 315 static pressure taps distributed across 9 spanwise wing stations in each wing, supported by five 64-port ESP modules (stations were down-selected from the ten 5.2% CRM-HL stations)

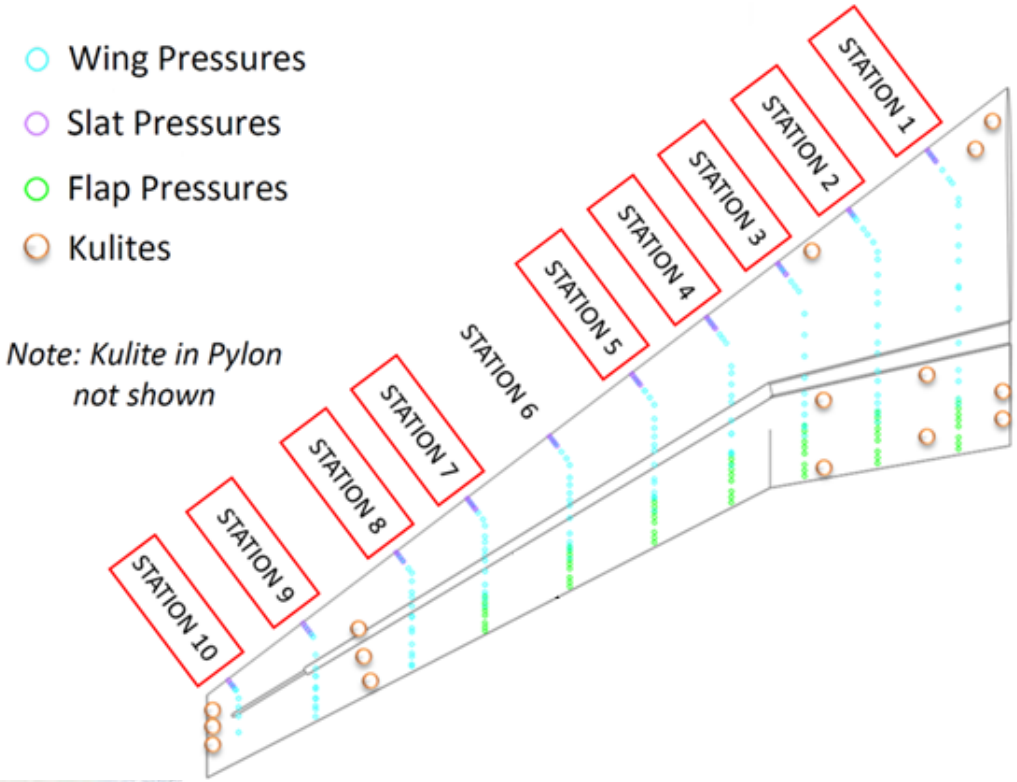

CRM-HL Station	eta
1	0.160
2	0.251
3	0.333
4	0.415
5	0.501
6	0.596
7	0.692
8	0.774
9	0.882
10	0.968

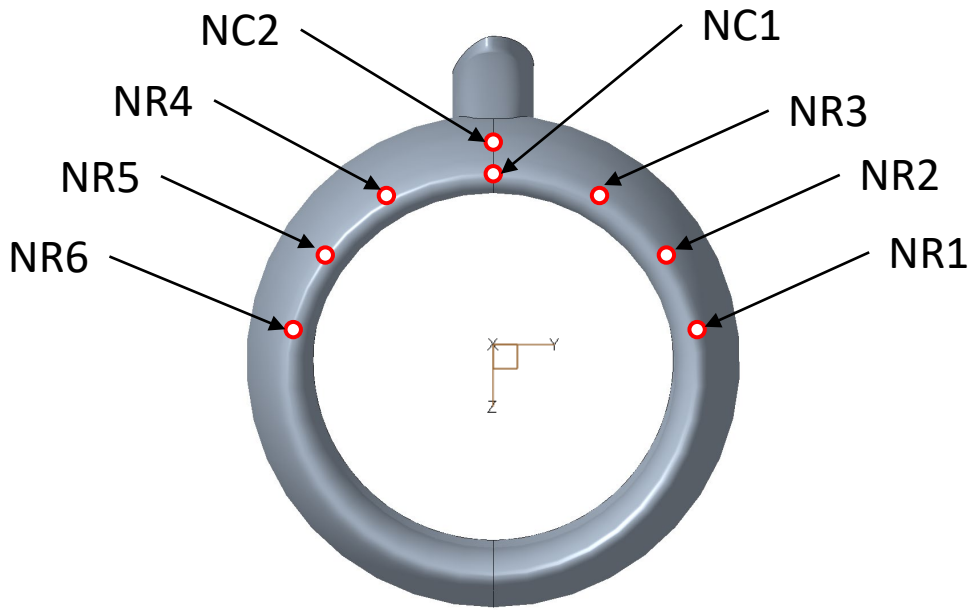

Requirements: Instrumentation

- 12 dynamic pressure transducers, 32 deformation targets, fiber optic flow visualization inserts, other miscellaneous tunnel instrumentation (e.g. thermocouples, fouling circuit, etc.)
- Instrumentation is distributed across the left-hand and right-hand wings

Priority	Kulite	Length	MS	BL	Surface
1	A.2	0.500”	28.923	4.346	IB LE
2	A.6	0.100”	*13.823	*6.108	IB Flap
9	C.2	0.100”	46.735	25.814	OB Wing
4	B.2	0.100”	32.501	10.120	Slat Filler
5	A.4	0.100”	37.406	3.465	IB TE
6	D.2	0.100”	49.169	31.112	Wing Tip

Kulite MS and BL dimensions retrieved and scaled down from 5.2% CRM-HL drawing 1299897 Rev. A

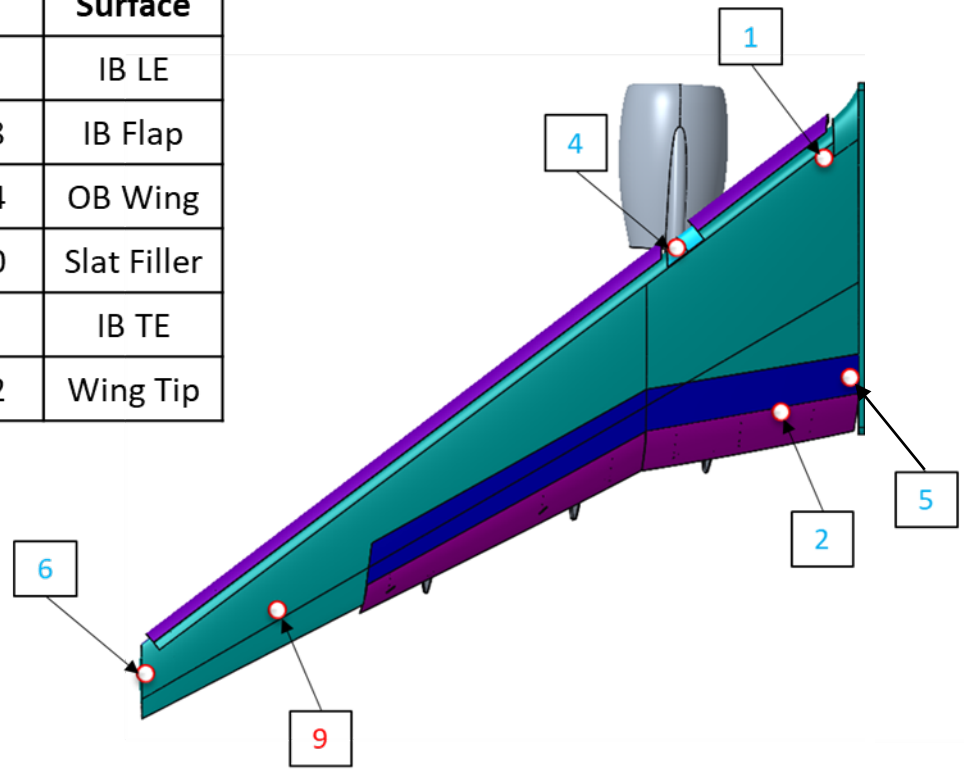

Requirements: Loads

- All components were conservatively designed for a maximum dynamic pressure of 525 psf (conditioning at 586 psf)
- 2.7% CRM-HL Full Span will be tested at its full range of AOA in NTF
- Table identifies max. load cases (525 psf) derived for each component using approach consistent with other NASA CRM-HL

Maximum Loads				
Component	Normal Force (lbs)	α_{NF} (°)	Axial Force (lbs)	α_{AF} (°)
Total	3900	18	-875	20
Wing	2550	18	-300	20
Body	505	22	-32	22
IB Slat	105	18	-143	20
OB Slat	360	20	-455	22
IB Flap	142	8	59.5	4
OB Flap	178	11	57	7
Nacelle/Pylon	161	20	-45	20

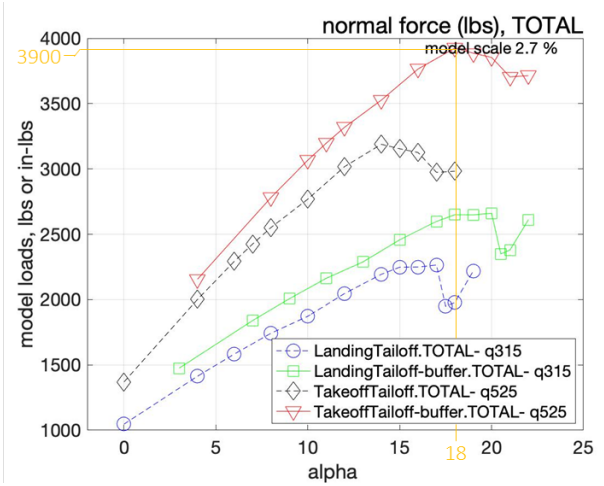

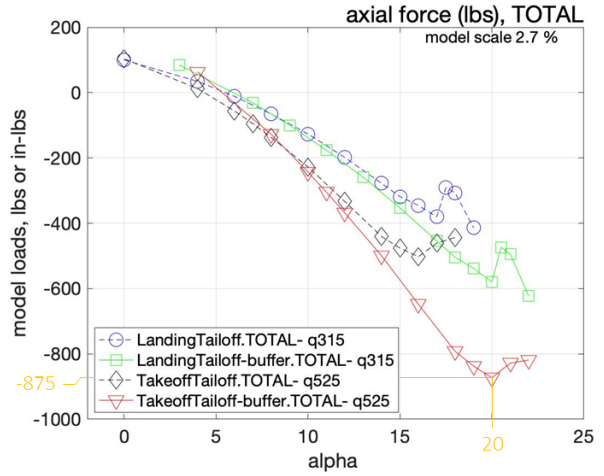

Additively Manufactured Components

National Aeronautics and Space Administration



- Landing gear strut and integral nacelle-pylon were selected for use as candidates serving as a test bed for integrating additively manufactured (AM) test articles in cryogenic facilities (e.g. NTF)
- Previous conventional nacelles could only include 6 static pressures influencing the decision to additively manufacture the 2.7% CRM-HL Nacelle (the 5.2% CRM-HL AM nacelle had 17)
- AM allowed for the integration of 8 static pressure ports while maintaining the flow surface
- AM reduced machining time for complex landing gear strut geometry



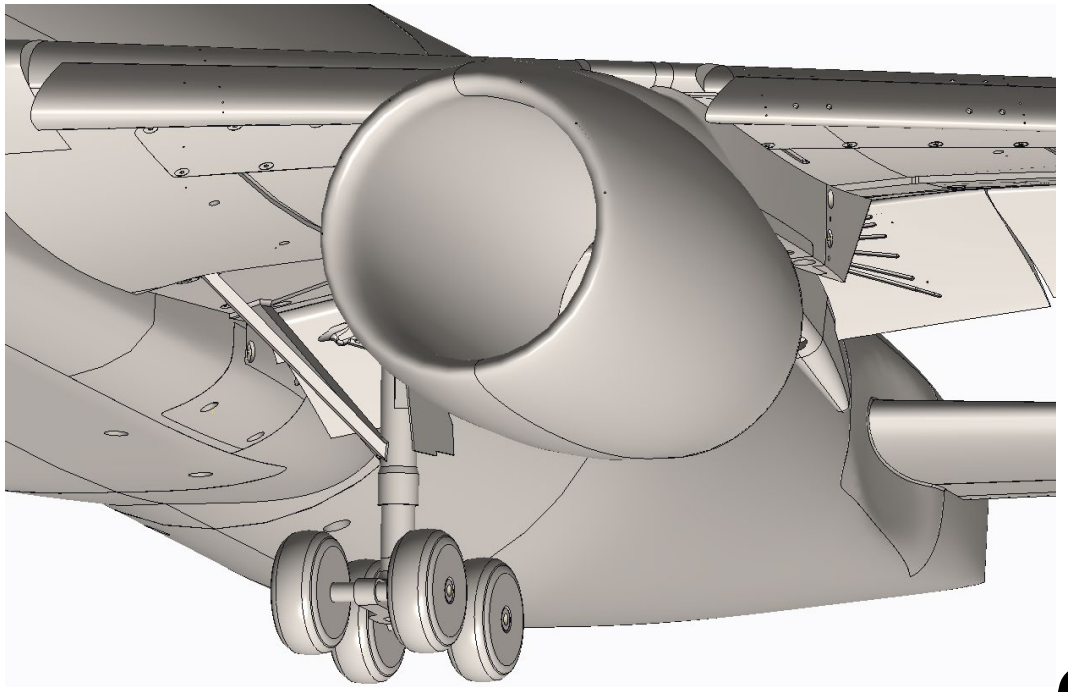

Design of the Integral Nacelle-Pylon

National Aeronautics and Space Administration

- Leveraged Direct Metal Laser Sintering (DMLS) Inconel 718 due to nickel superalloy's high elastic moduli and high strength, and similar coefficient of thermal expansion to Vascomax C-250
- Breakout panels designed with chines in three discreet locations

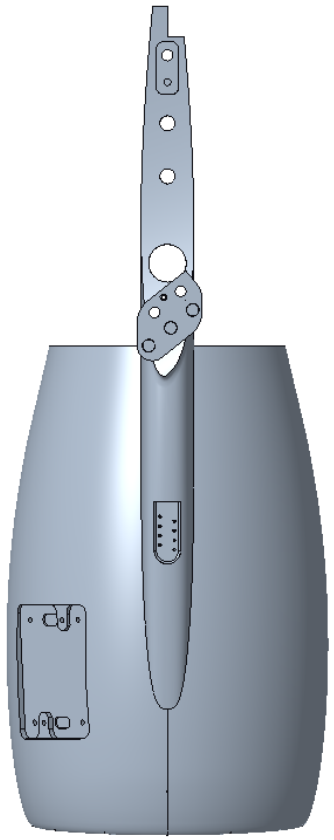

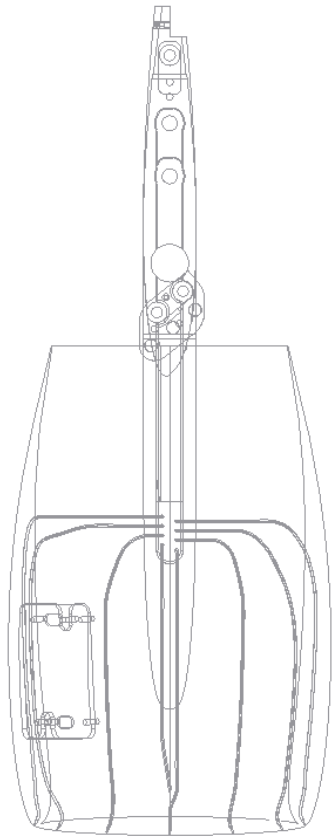

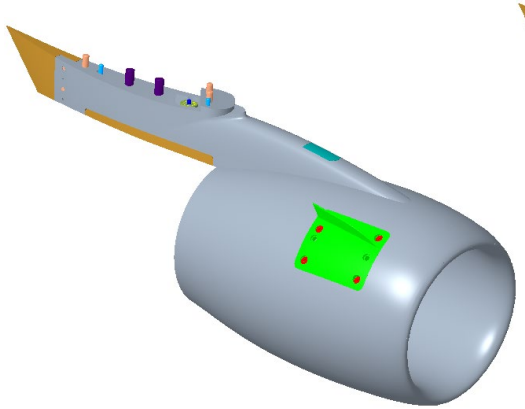

Chine Upper

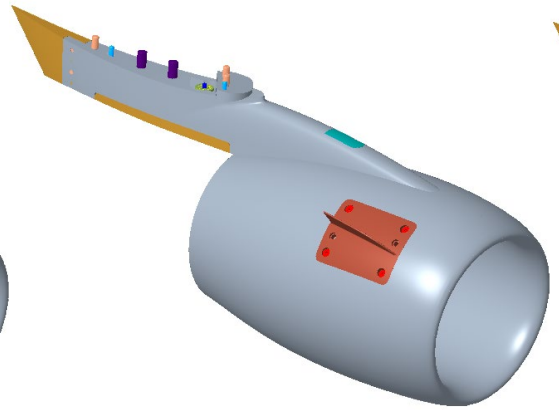

Chine Middle

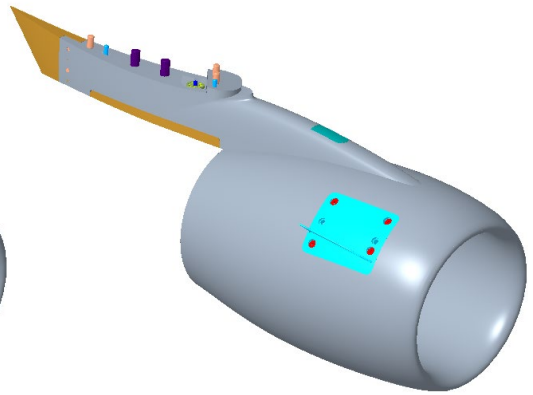

Chine Lower

DMLS Lessons Learned

National Aeronautics and Space Administration



- Same subcontractor was used for 2.7% CRM-HL as 5.2% CRM-HL
- Nacelle printed with the pylon mounting feature down at the recommendation of the manufacturer
- No significant shrinkage noted in contrast with .050”+ shrinkage in 5.2% CRM-HL nacelle cowl
- 3D printer filled the instrumentation trough in the pylon, which prompted rework; part was salvaged with engineering and fabrication personnel collaborative effort

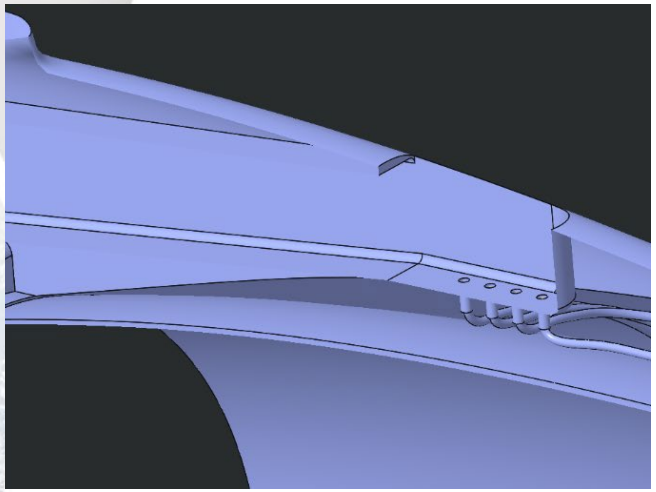

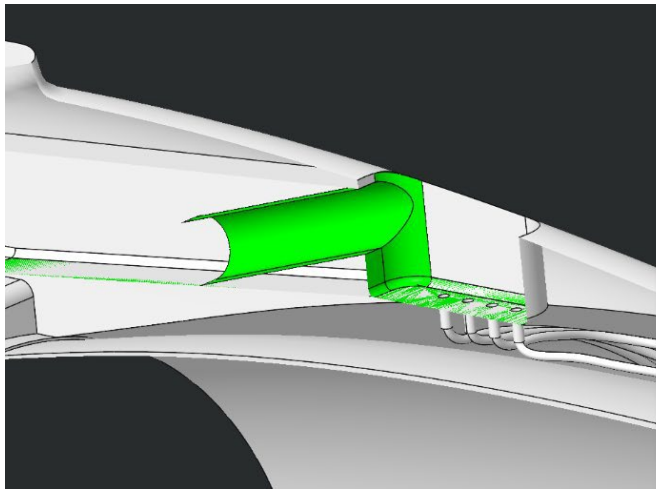

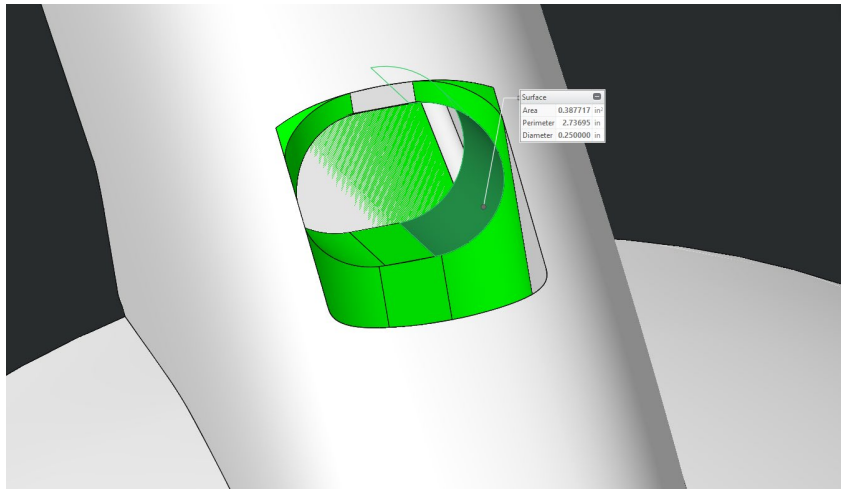

Prototyping: Slat Brackets

National Aeronautics and Space Administration

- Slat bracket cross-section scaled from 5.2% CRM-HL; additional height for added strength
- Prototyped to determine manufacturing and instrumentation routing feasibility
- Particularly difficult to machine even when ganged together and not compatible with OTS fasteners; all #2-56 fasteners in the leading edge of the wing are custom length

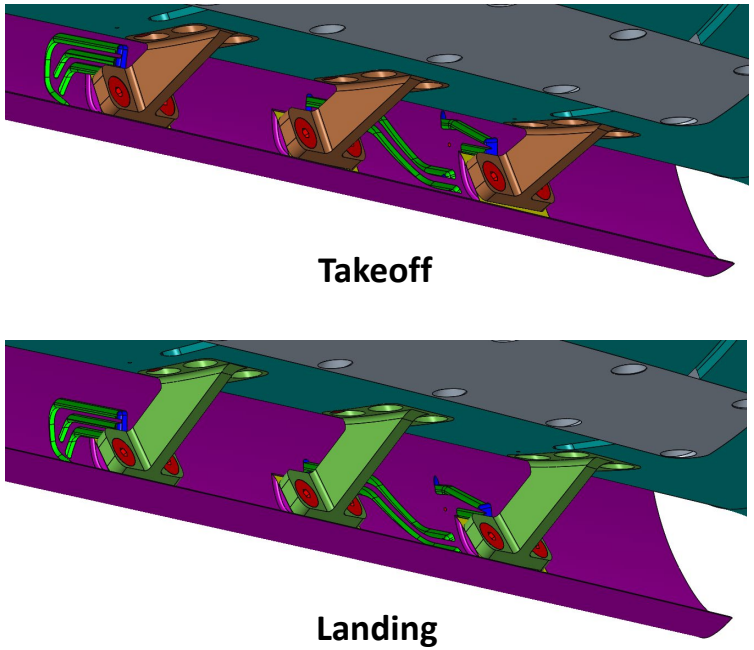

Slat Brackets As-Designed



Slat Brackets in Fabrication

Installation: Flap Track Fairings

National Aeronautics and Space Administration

- Flap is not removable due to Kulite installation, which required unique fuselage fairings to restore contour; installation sequence was critical for assembly during fabrication

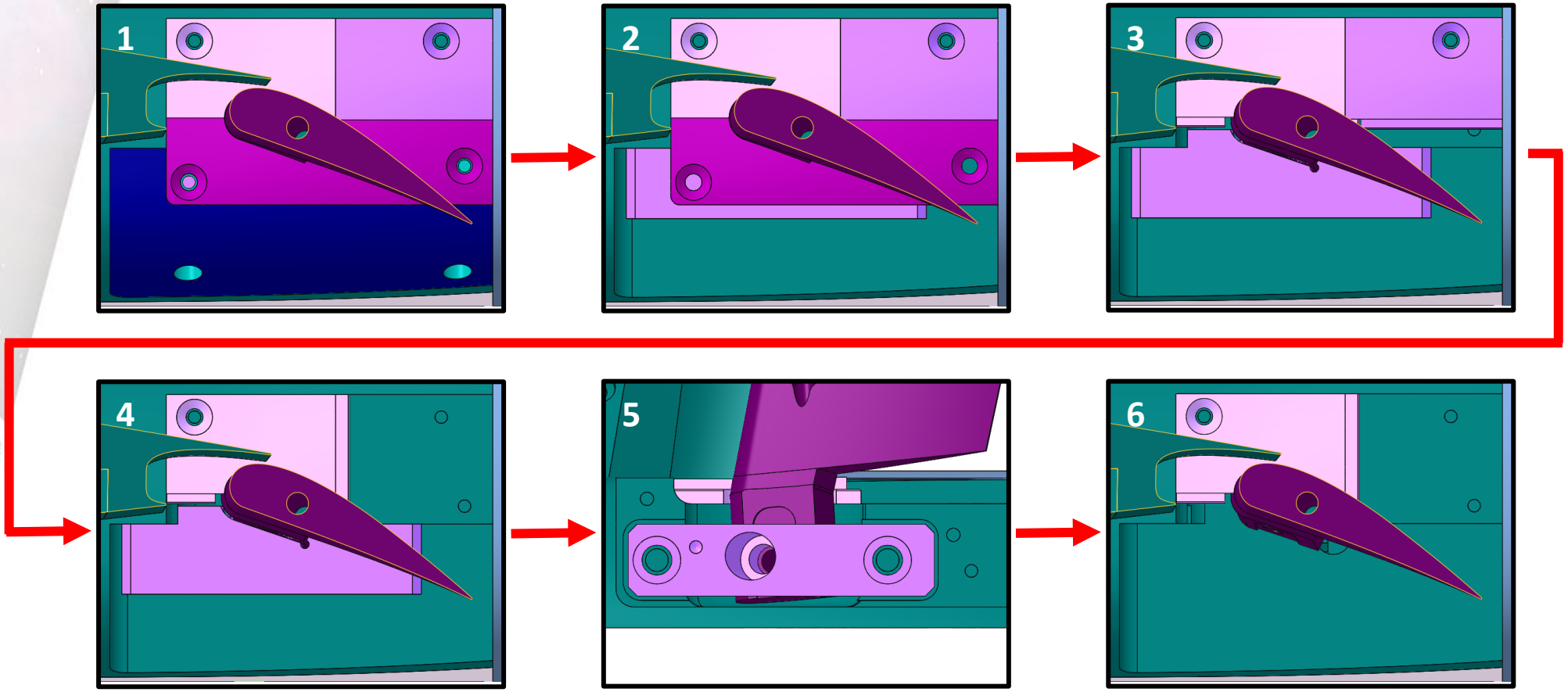

Analysis

- Wing constrained at seven fastener holes and loaded at 14 points distributed across 1/4-chord similar to analysis performed on 5.2% CRM-HL
- Legacy mounting block used as a placeholder to generate fastener loads for FEA validation

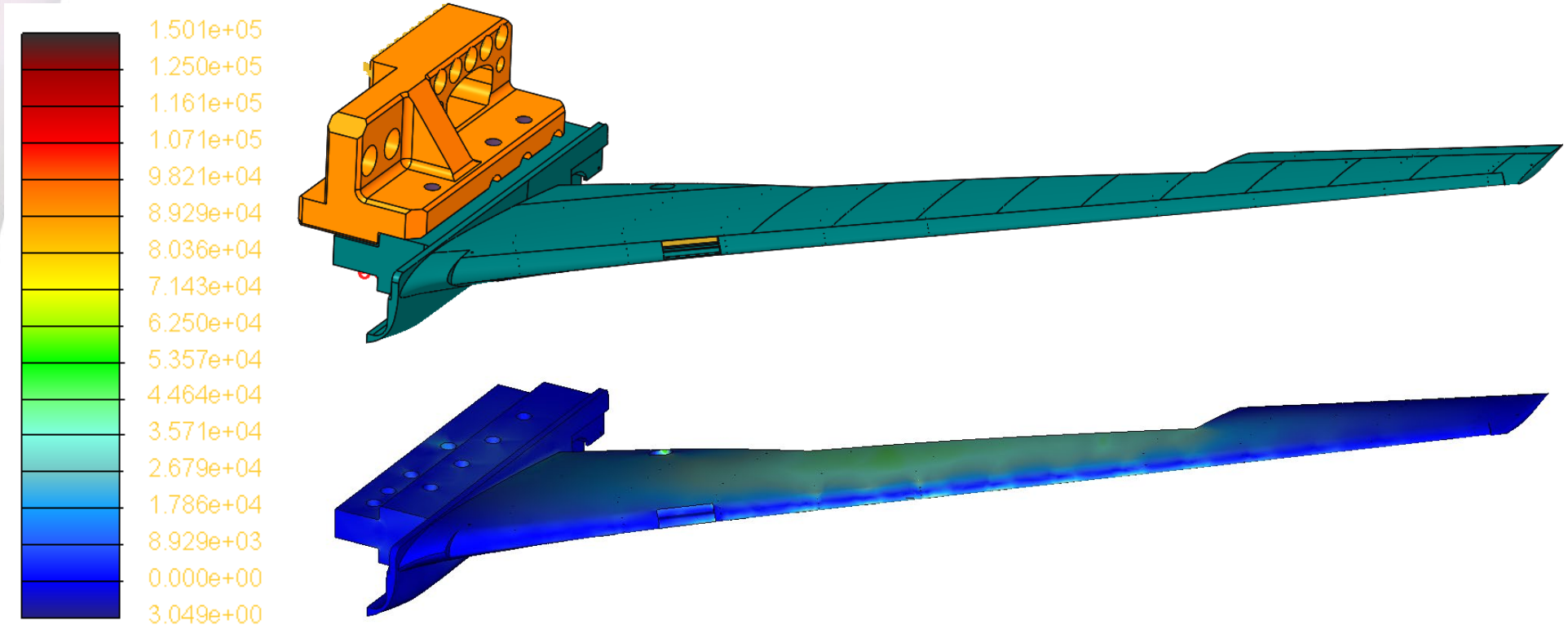

Fabrication

National Aeronautics and Space Administration

- Fabrication was awarded to and competed by Reliance Consolidated Model (ReCoM) contractor Advanced Technologies Incorporated (ATI*) of Newport News, Virginia



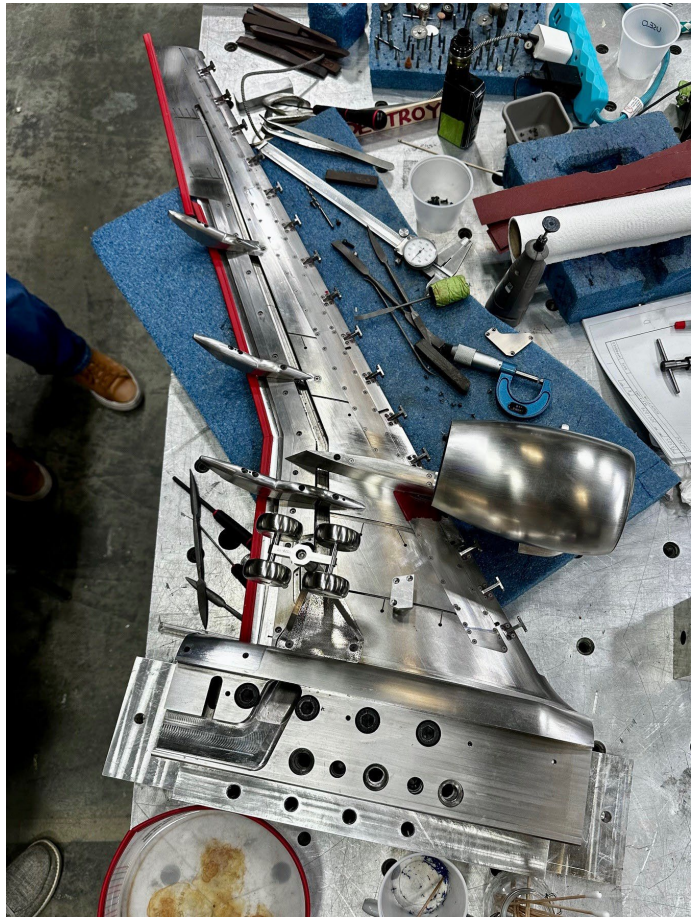

*The use of trademarks or names of manufacturers in this report is for accurate reporting and does not constitute an official endorsement, either expressed or implied, of such products or manufacturers by NASA.

Conclusion

- NASA 2.7% CRM-HL is currently beginning model build up in the NTF with plans to perform multiple wind tunnel testing campaigns, in facilities such as the NTF and ETW, in 2025

