NASA/TM-20260005910



A Balance Calibration Matrix Estimation Methodology for Long-Arm Calibration at NASA Langley Research Center

Adam R. Pillari, Devin E. Burns, and Peter A. Parker
Langley Research Center, Hampton, Virginia

September 2026

NASA STI Program Report Series

Since its founding, NASA has been dedicated to the advancement of aeronautics and space science. The NASA scientific and technical information (STI) program plays a key part in helping NASA maintain this important role.

The NASA STI program operates under the auspices of the Agency Chief Information Officer. It collects, organizes, provides for archiving, and disseminates NASA's STI. The NASA STI program provides access to the NTRS Registered and its public interface, the NASA Technical Reports Server, thus providing one of the largest collections of aeronautical and space science STI in the world. Results are published in both non-NASA channels and by NASA in the NASA STI Report Series, which includes the following report types:

- TECHNICAL PUBLICATION. Reports of completed research or a major significant phase of research that present the results of NASA Programs and include extensive data or theoretical analysis. Includes compilations of significant scientific and technical data and information deemed to be of continuing reference value. NASA counterpart of peer-reviewed formal professional papers but has less stringent limitations on manuscript length and extent of graphic presentations.

- TECHNICAL MEMORANDUM. Scientific and technical findings that are preliminary or of specialized interest, e.g., quick release reports, working papers, and bibliographies that contain minimal annotation. Does not contain extensive analysis.

- CONTRACTOR REPORT. Scientific and technical findings by NASA-sponsored contractors and grantees.

- CONFERENCE PUBLICATION. Collected papers from scientific and technical conferences, symposia, seminars, or other meetings sponsored or co-sponsored by NASA.

- SPECIAL PUBLICATION. Scientific, technical, or historical information from NASA programs, projects, and missions, often concerned with subjects having substantial public interest.

- TECHNICAL TRANSLATION. English-language translations of foreign scientific and technical material pertinent to NASA's mission.

Specialized services also include organizing and publishing research results, distributing specialized research announcements and feeds, providing information desk and personal search support, and enabling data exchange services.

For more information about the NASA STI program, see the following:

- Access the NASA STI program home page at http://www.sti.nasa.gov

- Help desk contact information:

https://www.sti.nasa.gov/sti-contact-form/
and select the "General" help request type.

NASA/TM-20260005910



A Balance Calibration Matrix Estimation Methodology for Long-Arm Calibration at NASA Langley Research Center

Adam R. Pillari, Devin E. Burns, and Peter A. Parker
Langley Research Center, Hampton, Virginia

National Aeronautics and
Space Administration

Langley Research Center
Hampton, Virginia 23681-2199

September 2026

The use of trademarks or names of manufacturers in this report is for accurate reporting and does not constitute an official endorsement, either expressed or implied, of such products or manufacturers by the National Aeronautics and Space Administration.

Available from:

NASA STI Program / Mail Stop 050
NASA Langley Research Center
Hampton, VA 23681-2199

A Balance Calibration Matrix Estimation Methodology for Long-Arm Calibration at NASA Langley Research Center

Adam R. Pillari, Devin E. Burns, and Peter A. Parker
National Aeronautics and Space Administration
Langley Research Center
Hampton, Virginia 23681

Nomenclature

Variables

AF	=	Axial force
NF	=	Normal force
PM	=	Pitch moment
RM	=	Roll moment
SF	=	Side force
$\times$	=	Multiplication sign
x	=	Applied force or moment
X	=	Axis pertaining to axial force
Y	=	Axis pertaining to side force
YM	=	Yaw moment
Z	=	Axis pertaining to normal force
β	=	Matrix coefficient
θ	=	Bridge output
θ_0	=	Initial zero
θ_f	=	Return zero

Subscripts

A	=	axial force
F	=	force
l	=	roll moment
M	=	moment
m	=	pitch moment
N	=	normal force
n	=	yaw moment
S	=	side force
$+$	=	positive force or moment
$-$	=	negative force or moment

Contents

1 Introduction **5**

2 Long-Arm Calibration Apparatus **5**
2.1 Why Long-Arm Calibration? . . . 6
2.2 Long-Arm Calibration Hardware . . . 6
2.2.1 Fixture . . . 6
2.2.2 Moment Arms . . . 7
2.2.3 Bell Cranks and Cable Loads . . . 8
2.2.4 Calibration Stand . . . 8
2.2.5 Leveling System . . . 8
2.3 General Process . . . 9

3 Calibration Coefficient Estimation Methodology **12**
3.1 Delta Loads and Signals . . . 12
3.2 Single Applied Force . . . 13
3.3 Two Applied Forces . . . 14
3.4 Single Moment with Small Auxiliary Force . . . 15
3.5 Single Moment with Large Auxiliary Force . . . 15

4 First Order and Pure Quadratic Coefficients **17**
4.1 Axial Force Coefficients . . . 17
4.2 Normal and Side Force Coefficients . . . 19
4.3 Pitching and Yawing Moment Coefficients . . . 20
4.4 Rolling Moment Coefficients . . . 21

5 Two-Factor Interaction Coefficients **23**
5.1 Normal Force × Axial Force and Side Force × Axial Force Coefficients . . . 23
5.2 Normal Force × Side Force and Normal Force × Yawing Moment Coefficients . . . 25
5.3 Normal Force × Pitching Moment and Side Force × Yawing Moment Coefficients . . . 26
5.4 Normal Force × Rolling Moment, Side Force × Rolling Moment Coefficients . . . 27
5.5 Axial Force × Pitching Moment, Axial Force × Yawing Moment, and Axial Force × Rolling Moment Coefficients . . . 28
5.6 Pitching Moment × Side Force and Pitching Moment × Yawing Moment Coefficients 31
5.7 Pitching Moment × Rolling Moment and Yawing Moment × Rolling Moment Coefficients . . . 33

6 Tare Load Corrections and Proof Loads **36**
6.1 Tare Load Correction of Select Non-linear Terms . . . 36
6.2 Three- and Four-Component Proof Loads . . . 37
6.3 Six-component Proof Load . . . 37

7 Calibration Summary Report **39**
7.1 Cover Sheet and Details . . . 39

7.1.1 Component Bridge Coefficients 39
7.2 Determination of Balance Accuracy 40

8 Extensions of the Coefficient Estimation Methodology 40
8.1 Partitioned Regression Using All Data 40
8.2 General Application of Coefficient Estimation 42

9 Summary 43

Appendices 44

A Example Load Schedule 44

B Calculation Examples 49
B.1 Calculation of Primary Sensitivity Values 49
B.2 Calculation of Normalized and Effect % for a Second Order Coefficient 49
B.3 Calculation of Normalized and Effect % for a NF Interaction 50

1 Introduction

This document presents a methodology used for calibration data analysis of internal wind-tunnel balances at Langley Research Center (LaRC). The goal of wind-tunnel balance calibration is to apply known forces and moments to the balance so that a math model can be developed relating the balance signals to the applied loads. This work will focus primarily on long-arm calibration where partitioned sets of forces and moments are used to estimate specific coefficients. This technique was developed in the 1950s prior to the development of readily available global regression tools. We differentiate long-arm calibration from short-arm calibration where the application of forces and moments are more coupled since force inducing moments are applied at shorter distances from moment center (i.e. greater amount of force required to generate a moment). The calibration data analysis presented here can be applied to both long-arm and short-arm calibrations, but the vast majority of calibrations performed at LaRC are long-arm calibrations; hence, the focus of this work. While this calibration data analysis methodology is explained within other literature and technical documents at NASA (Ref. 1–3), there has not yet been a comprehensive overview within a single document. Thus, the primary goal of this document is to provide a comprehensive guide to long-arm calibration design and its data analysis.

2 Long-Arm Calibration Apparatus

This section will cover the hardware and methodology of balance long-arm calibration. Internal balances at LaRC follow a similar form and function, differing mostly in size, but there are a number of exceptions. For example, while most balances feature all six components discussed in the introduction, there are some that omit one or more axes, and may be oriented differently during calibration and use. The remainder of this TM will focus on the calibration methodology for an internal six-component force balance designed to measure the forces and moments illustrated in Figure 1. This coordinate system is common within the ground testing community (Ref. 4, 5). Note that the airflow direction is aligned with the +AF direction in the figure. The calibration procedures discussed here are generally applicable, though loadings may need to be modified or omitted to suit the individual balance.

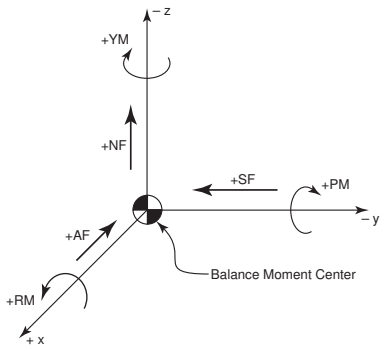

Figure 1.—Illustration of the six components typically measured and their orientations with respect to the wind-tunnel model and airflow, which is aligned with the +AF direction.

2.1 Why Long-Arm Calibration?

As discussed in Rhew and Parker (Ref. 6), there are multiple balance calibration methods used across industry, each varying in the way loads are applied, how many data points are used, and how many components are loaded simultaneously. Methods utilizing automatic calibration machines eliminate the need for manual application of loads to the balance. Other calibration methods such as short-arm calibration or Langley single vector system (SVS) calibration may be faster and cheaper, as they feature fewer loadings. The long-arm calibration methodology was developed in the 1950s under constrained computational resources and allowed for an efficient and direct estimation of coefficients based on a partitioned set of runs.

While we currently have access to much more extensive computational resources, the partitioned nature of the process still provides benefits. For instance, we can plot each calibration sequence and develop a detailed understanding of balance performance including estimating coefficients, evaluating linearity and hysteresis of the balance, and detecting anomalies that may occur during the calibration. Moreover, the calibration process uses free-hanging dead weight as much as possible, which is simple, trusted, and provides consistent results.

2.2 Long-Arm Calibration Hardware

Long-arm calibration hardware consists of a balance fixture block, moment arms, calibrated weights, and double knife-edge weight hangers. The calibration takes place within a stand with re-leveling capabilities, and rails for bellcranks to be mounted for orthogonal loads via cables. Each of these components will be elaborated on in more detail in the following sections.

2.2.1 Fixture

The balance fixture is a precision machined rectangular block that is rigidly affixed to the metric end of the balance. An example is seen in Figure 2. A fixture may be custom made for individual balance designs or balances of similar design "series" may be compatible with a single fixture. Precisely cut knife-edge grooves on the fixture allow forces to be applied at any position along the groove. Each fixture also features dowel and bolt holes for the mounting of moment arms.

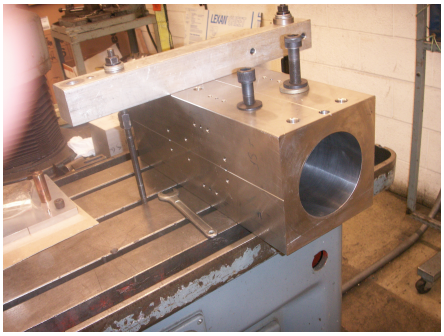

Figure 2.—A balance fixture for one of NASA's largest sting-mounted internal balances.

Double knife-edges are used to precisely apply a force at a specific location (Figure 3) defined by a knife edge groove. They allow for unrestrained freedom of motion in two perpendicular planes that ensures that the applied weight is aligned with gravity.

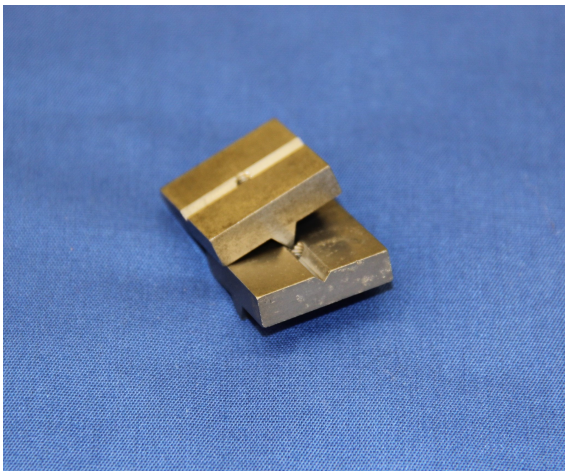

Figure 3.—Paired knife-edge blocks used to apply point loads.

2.2.2 Moment Arms

Moment arms precisely apply forces at specific lengths from moment center. They can be of significant length in comparison to the balance being calibrated with some measuring in excess of 4 feet. This length is used to apply a moment via transfer of dead weight from moment center to precisely located knife-edge grooves on the upper arm surface. The weight that is transferred is referred to as the transfer load, which is targeted to be 10% or less of the associated maximum design load.

Moment arms may be fabricated as a pair of cantilevered beams mounted to a fixture adapter, or as a single beam mounted at centerline to provide an equal moment arm to either side of the balance moment center. Roll arms are mounted along the Y axis in order to apply a roll moment (Figure 4). Pitch arms are mounted along the balance X axis for the application of either pitching or yawing moment. For multi-component loads, both sets of arms may be attached simultaneously, as seen in Figure 4. Depending on the ratio of loads, some pitch arms may have separate knife-edge mounts for pitch and yaw moments on the same arm. Unlike fixtures, moment arms are often used for several balances, as balances of similar size and test function will often have similar load ratios between forces and moments.

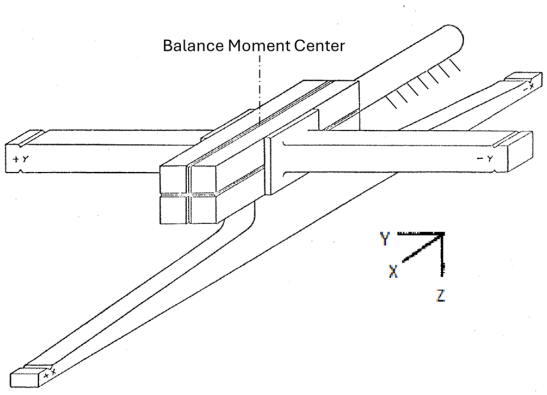

Figure 4.—Drawing of a balance with fixture and moment arms attached.

2.2.3 Bell Cranks and Cable Loads

To apply forces and/or moments perpendicular to gravity, cable loads are required. Bell cranks, such as the one shown in Figure 5, are used to apply cable loads. Bell cranks feature a precision-machined fulcrum block mounted into a knife-edge groove pivot, allowing a gravity-generated force to be applied at a 90 degree angle. To apply these forces, a cable is linked from the horizontal arm of the fulcrum to a knife-edge yoke, which is then seated in the appropriate fixture groove. The vertical arm of the fulcrum is linked to a weight hanger rod, and tension of the system is maintained by a small tensioning tare load, typically 10% of the full-scale load associated with that force axis. Knife-edge bell cranks are used rather than pulleys to minimize friction. Mechanical and optical measuring devices are used to maintain cable alignment during each loading sequence ensuring that the force applied is aligned correctly with the appropriate axis.

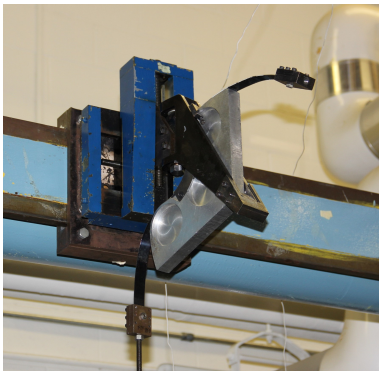

Figure 5.—Bell crank mounted on calibration stand rail.

2.2.4 Calibration Stand

Calibration stands vary in size depending on the loads required for balance calibration. The stand shown in Figure 6 is utilized for the largest balances in the LaRC inventory. The balance is positioned in the center of the stand, suspended from an actuated leveling system and the bell cranks are aligned for the mounting of cable loads. An attachment to the non-metric end of the balance allows the balance to be rotated (about the roll axis) to permit dead-weight loading for positive and negative side and normal loads. Additionally, an adapter is often used to mount the balance in a nose up or nose down orientation for direct loading of axial force, rather than the use of a cable load.

2.2.5 Leveling System

The calibration stand features a two-axis linear actuator system that allows re-leveling of the balance about both its roll and pitch axes. Re-leveling ensures that balance and stand deflection are counteracted and the nominal loads are achieved. For instance, if normal force is applied without re-leveling it would generate some amount of axial force due to balance deflection. The ability to apply targeted nominal loads, and no others, is a critical feature of the long-arm calibration data reduction process because solving the system of linear equations, as outlined in subsequent sections, only works with the nominal loads applied. Leveling is performed after every loading point, prior



Figure 6.—20,000 lb. NF capacity calibration stand for the largest balances.

to recording of data points, as application or removal of weight will naturally cause the balance to change its angular position.

2.3 General Process

Long-arm calibration follows a predetermined load schedule consisting of 81 unique loading configurations. At the start of every loading sequence, the balance is oriented, weight hangers are positioned at the appropriate locations, and auxiliary loads (constant, known but not incremented loads) are applied. Each loading configuration (referred to as a run or code) has a numerical identifier, and runs are grouped in series that are used to estimate specific matrix coefficients.

A sample load schedule for a 5-point calibration of a balance with NF=100 lbs, AF=50 lbs, PM=200 in-lbs, RM=150 in-lbs, YM=100 in-lbs, SF=50 lbs, using calibration hardware with 20-inch PM arms, 15-inch RM arms, and 10-inch YM arms is included in Appendix A. This detailed load schedule is generally summarized in Table 1, which shows incrementing load for each code along with the non-incrementing auxiliary loads. A tilde has been placed over auxiliary loads that are not applied at full-scale.

The first point of the run includes all the tares, including the weight of the fixture, arms, hangers, knife edges, etc. Any auxiliary loads are added and an auxiliary load data point should be taken. This data point with all tare and auxiliary loads applied becomes θ_0. The balance is then loaded up to full load usually in increments. The weight is then decremented until only the tare and auxiliary loads remain for the return zero θ_f measurement. Before every data point is recorded, the calibration assembly is leveled via the stand actuators and any motion of the weight hangers is stilled.

Table 1.—Long-Arm Calibration Load Schedule from (Ref. 3). Tildes have been put over auxiliary loads that are not applied at full-scale.

Code	Incrementing Load	Auxiliary 1	Auxiliary 2	Auxiliary 3
10	AF			
20	NF			
Continued on next page				

Table 1 – continued from previous page

Code	Incrementing Load	Auxiliary 1	Auxiliary 2	Auxiliary 3
30	PM	$\widetilde{NF}$		
1030	-PM	$\widetilde{NF}$		
1040	-RM	$\widetilde{NF}$		
40	RM	$\widetilde{NF}$		
50	-NF			
1060	-PM	$\widetilde{\widetilde{-NF}}$		
60	PM	$\widetilde{\widetilde{-NF}}$		
70	RM	$\widetilde{\widetilde{-NF}}$		
1070	-RM	$\widetilde{\widetilde{-NF}}$		
80	SF			
90	YM	$\widetilde{SF}$		
1090	-YM	$\widetilde{SF}$		
100	-SF			
1110	-YM	$\widetilde{\widetilde{-SF}}$		
110	YM	$\widetilde{\widetilde{-SF}}$		
120	RM	$\widetilde{\widetilde{-SF}}$		
1120	-RM	$\widetilde{\widetilde{-SF}}$		
130	RM	-SF		
1130	-RM	-SF		
1140	-YM	RM	$\widetilde{\widetilde{-SF}}$	
140	YM	RM	$\widetilde{\widetilde{-SF}}$	
1150	-YM	-RM	$\widetilde{\widetilde{-SF}}$	
150	YM	-RM	$\widetilde{\widetilde{-SF}}$	
1160	-YM	-SF		
160	YM	-SF		
170	YM	SF		
1170	-YM	SF		
1180	-RM	$\widetilde{SF}$		
180	RM	$\widetilde{SF}$		
1190	-RM	SF		
190	RM	SF		
200	YM	RM	$\widetilde{SF}$	
1200	-YM	RM	$\widetilde{SF}$	
210	YM	-RM	$\widetilde{SF}$	
1210	-YM	-RM	$\widetilde{SF}$	
220	PM	NF		
1220	-PM	NF		
1230	-RM	NF		
230	RM	NF		
240	PM	RM	$\widetilde{NF}$	
1240	-PM	RM	$\widetilde{NF}$	
250	PM	-RM	$\widetilde{NF}$	
1250	-PM	-RM	$\widetilde{NF}$	

Continued on next page

Table 1 – continued from previous page

Code	Incrementing Load	Auxiliary 1	Auxiliary 2	Auxiliary 3
1260	-PM	-NF		
260	PM	-NF		
270	RM	-NF		
1270	-RM	-NF		
1280	-PM	RM	$\widetilde{-NF}$	
280	PM	RM	$\widetilde{-NF}$	
1290	-PM	-RM	$\widetilde{-NF}$	
290	PM	-RM	$\widetilde{-NF}$	
1300	-PM	AF	$\widetilde{-NF}$	
300	PM	AF	$\widetilde{-NF}$	
310	RM	AF	$\widetilde{-NF}$	
1310	-RM	AF	$\widetilde{-NF}$	
320	-NF	AF		
330	NF	AF		
340	PM	AF	$\widetilde{NF}$	
1340	-PM	AF	$\widetilde{NF}$	
1350	-RM	AF	$\widetilde{NF}$	
350	RM	AF	$\widetilde{NF}$	
360	SF	AF		
370	YM	AF	$\widetilde{SF}$	
1370	-YM	AF	$\widetilde{SF}$	
1380	-YM	AF	$\widetilde{-SF}$	
380	YM	AF	$\widetilde{-SF}$	
390	-SF	AF		
400	NF	SF		
420	NF	YM	$\widetilde{SF}$	
430	PM	SF	$\widetilde{NF}$	
1430	-PM	SF	$\widetilde{NF}$	
440	PM	YM	$\widetilde{SF}$	$\widetilde{NF}$
1440	-PM	YM	$\widetilde{SF}$	$\widetilde{NF}$
460	-NF	SF		
470	-NF	YM	$\widetilde{SF}$	
1490	-PM	SF	$\widetilde{-NF}$	
490	PM	SF	$\widetilde{-NF}$	
1510	-PM	YM	$\widetilde{SF}$	$\widetilde{-NF}$
510	PM	YM	$\widetilde{SF}$	$\widetilde{-NF}$
1010	-AF			

3 Calibration Coefficient Estimation Methodology

As documented in other works (Ref. 1, 2), the behavior of LaRC single-piece balances is captured adequately by the second-order Taylor series approximation presented in Equation 1. In this equation, θ is the electrical response from one strain gage bridge set, the βs are the unknown coefficients to be estimated from calibration, the Xs are the known applied forces and/or moments, ϵ is the error, and k is the number of balance components.

For a six-component balance, k=6, therefore Equation 1 consists of an intercept and six linear, six quadratic, and fifteen interaction coefficients. The deliverable of a full six-component calibration is a 6x27 matrix of coefficients. If the behavior of a balance departs from this assumed behavior (via discontinuous slopes or higher order terms for instance) then the load schedule and estimation methodology may need to be augmented from what is presented in the remainder of this document.

$$\theta = \beta_0 + \underbrace{\sum_{i=1}^{k} \beta_i(x_i)}_{\text{linears}} + \underbrace{\sum_{i=1}^{k} \beta_{ii}(x_i^2)}_{\text{quadratics}} + \underbrace{\sum_{i=1}^{k-1} \sum_{j=i+1}^{k} \beta_{ij}(x_i)(x_j)}_{\text{interactions}} + \epsilon \tag{1}$$

Solving for the unknown coefficients requires at minimum a number of data points equal to the number of coefficients all of which must be linearly independent. The long-arm calibration process uses combinations of single and multi-component loads to systematically determine the coefficients of the 6x27 matrix using an approach similar to linear algebra described in the following sections. Note that in practice the intercept shown in Equation 1 is the unloaded zero for the balance estimated by averaging zeros taken with the balance in upright and inverted positions. Since delta loads and delta signals are used for matrix coefficient estimation (as outlined in the next section), the intercept term is not present in subsequent equations until tare load corrections are discussed.

3.1 Delta Loads and Signals

For simplicity, calibration data analysis relies on delta loads and delta signals for initial coefficient estimation. The effects of tare loads are considered later. The definition of delta loads is expressed in Equation 2 where Δx is the delta load, x is the total applied load, and x_0 is the initial load. The initial load consists of all non-incrementing load for the run and can consist of both tare and auxiliary loads. Delta loads are significant because each loading code is designed to activate specific coefficients within the matrix, and Δx reflects those active coefficients and eliminates the inactive coefficients. For example, if the magnitude and polarity of a force or moment is constant during the run, then Δx=0 for that coefficient. Likewise, if a component is not loaded, then x=0, and the coefficient will be omitted. This simplifies the coefficient calculations by reducing the number of coefficients involved. This is an essential technique used for long-arm calibration; isolation of matrix coefficients by reducing the number of active coefficients to a solvable number.

$$\Delta x = x - x_0 \tag{2}$$

Similar to the loads, the electrical outputs of the bridges are also converted to deltas for each run. The calculation of delta signals, $\Delta\theta$, is shown in Equation 3 where θ is the raw electrical signal recorded by the data acquisition system for the current run point and θ_0 is the initial run point.

$$\Delta\theta = \theta - \theta_0 \tag{3}$$

Generally, there is a difference between the initial, θ_0, and return, θ_f, zero load point which is referred to as the zero shift. Zero shift corrections can be made to all signals. The equation for the zero shift corrected delta signals ($\Delta\theta^*$) is shown in Equation 4.

$$\Delta\theta^* = \Delta\theta - \frac{\theta_f - \theta_0}{2} \tag{4}$$

To simplify notation, bridge outputs in this document will be indicated by θ, but in practice zero shift corrected delta signals and delta loads are used for coefficient estimation.

3.2 Single Applied Force

For primary force loadings, the balance is oriented with the corresponding axis aligned with gravity for a pure dead weight load at moment center. The data point for θ_0 is taken with no applied weight other than the fixture and weight hanger. Full-scale load will then be applied to the balance by rotating it into both the upright and inverted orientations producing a representative balance response like that shown by the red points in Figure 7. Note that this graphic depicts only zero applied load (x_0) and the full-scale applied load (x_F) for simplicity.

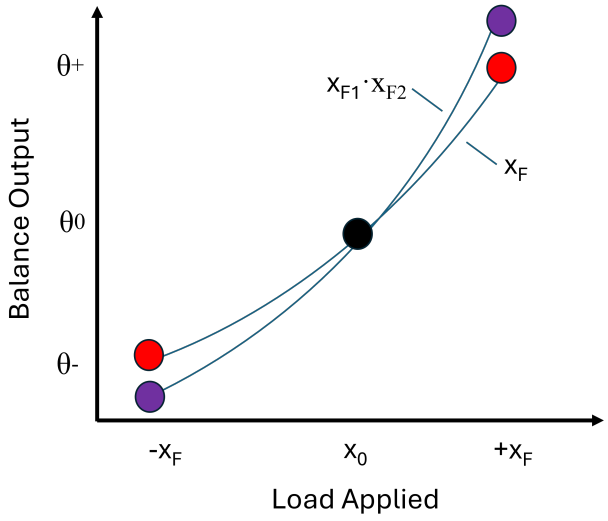

Figure 7.—Plot illustrating both a single component applied force (red points) and a gravity applied load and a perpendicular cable load applied simultaneously (blue points) which is discussed in Section 3.3.

Due to the absence of other force components, none of the other coefficients are activated, so the primary force loads take the general form shown in Eq. (5) where the output is expressed as a function of the single applied force, x_F.

$$\theta_F = \beta_F(x_F) + \beta_{F^2}(x_F)^2 \tag{5}$$

The full-scale loads of the sequence (both positive and negative) allow for estimation of the β_F and β_{F^2} coefficients of the matrix. To estimate the coefficients making up this equation, the two full-scale loads ($-x_F$ and x_F) are used in conjunction with their corresponding balance bridge

outputs (θ_- and θ_+). This results in Eqs. (6) and (7), representing two full-scale force loads of equal magnitude but opposite polarity.

$$\theta_+ = \beta_F(+x_F) + \beta_{F^2}(+x_F)^2 \tag{6}$$

$$\theta_- = \beta_F(-x_F) + \beta_{F^2}(-x_F)^2 \tag{7}$$

The opposite polarity of the dead weight load application x results in a sign change for the β_F coefficient. Due to the second order term remaining positive in both Eqs. (6) and (7), the equations are linearly independent, and thus estimates of β_F and β_{F^2} are possible. Taking the difference between (7) and (6) yields equation (8), while adding (6) and (7) yields equation (9). Rearranging equations (8) and (9) yields simple algebraic expressions that may be used to estimate the first and second order coefficients of the force component under load.

$$Eq.(6) - Eq.(7) = \theta_+ - \theta_- = 2\beta_F(x_F) \tag{8}$$

$$Eq.(6) + Eq.(7) = \theta_+ + \theta_- = 2\beta_{F^2}(x_F)^2 \tag{9}$$

$$\downarrow$$

$$\beta_F = \frac{\theta_+ - \theta_-}{2(x_F)} \qquad \beta_{F^2} = \frac{\theta_+ + \theta_-}{2(x_F)^2}$$

Note that these are direct algebraic estimates of the coefficients using only end points of the loading sequences. This was historically how the coefficients were estimated and the approach is repeated for all remaining coefficients. The methodology can be extended to more general estimates made with additional data points as is current practice. This is elaborated on in Section 8.1.

3.3 Two Applied Forces

This section adds an additional applied force via a cable to the gravity applied force. These types of loadings allow for the estimation of interaction coefficients with two forces acting perpendicular to one another. A representation of the effect of the added cable load on the balance output response is depicted by the blue points in Figure 7. The loadings are carried out by applying the full-scale cable loads for the first data point (as an auxiliary load) and then incrementing the gravity applied load. Given the active components for this case we get the following equation:

$$\theta_{F1\times F2} = \beta_{F1}(x_{F1}) + \beta_{F2}(x_{F2}) + \beta_{F1^2}(x_{F1})^2 + \beta_{F2^2}(x_{F2})^2 + \beta_{F1\times F2}(x_{F1})(x_{F2}) \tag{10}$$

Considering delta incremented loads we get:

$$\Delta\theta_{F1\times F2} = \beta_{F1}(x_{F1}) + \beta_{F1^2}(x_{F1})^2 + \beta_{F1\times F2}(x_{F1})(x_{F2}) \tag{11}$$

With the $+x_F$ and $-x_F$ endpoints, the following two independent equations are produced:

$$\theta_{+F1\times F2} = \beta_{F1}(+x_{F1}) + \beta_{F1^2}(+x_{F1})^2 + \beta_{F1\times F2}(+x_{F1})(+x_{F2}) \tag{12}$$

$$\theta_{-F1\times F2} = \beta_{F1}(-x_{F1}) + \beta_{F1^2}(-x_{F1})^2 + \beta_{F1\times F2}(-x_{F1})(+x_{F2}) \tag{13}$$

We have two equations 12 and 13 and three coefficients to estimate. We can leverage the gravity based load without the cable load (equations 6 and 7) to isolate the two-factor interaction coefficient as presented in equations 14-16 .

$$Eq.(12) - Eq.(6) = \theta_{+F1\times F2} - \theta_{+} = \beta_{F1\times F2}(+x_{F1})(+x_{F2}) \tag{14}$$

$$Eq.(13) - Eq.(7) = \theta_{-F1\times F2} - \theta_{-} = \beta_{F1\times F2}(-x_{F1})(+x_{F2}) \tag{15}$$

$$\beta_{F1\times F2} = \frac{(\theta_{+F1\times F2} - \theta_{+}) - (\theta_{-F1\times F2} - \theta_{-})}{2x_{F1}x_{F2}} \tag{16}$$

3.4 Single Moment with Small Auxiliary Force

In order to create a moment in a long-arm calibration, a small force is required. A primary moment equation will thus have the general form shown in Eq.(17).

$$\theta_M = \beta_F(\widetilde{x_F}) + \beta_M(x_M) + \beta_{F^2}(\widetilde{x_F}^2) + \beta_{M^2}(x_M^2) + \beta_{FM}(\widetilde{x_F})(x_M) \tag{17}$$

The initial θ_0 point of each primary moment run begins with an auxiliary load at moment center. This load is usually 10% of full-scale applied force to generate 100% of full-scale moment when transferred onto the moment arm. The transfer load is moved in increments onto the moment arm, generating the required moments while keeping the applied force constant. This is reflected in $\Delta\theta_M$ (Eq. 18) where the β_F and β_{F^2} are omitted from the equation since $\Delta x_F = 0$. Also, since the remaining x_F coefficient in Eq 18 is not the full-scale load it has been designated with a tilde.

$$\Delta\theta_M = \beta_M(x_M) + \beta_{M^2}(x_M^2) + \beta_{FM}(\widetilde{x_F})(x_M) \tag{18}$$

For moment loadings, four runs are performed as depicted by the blue-colored endpoints in Figure 8. First, with the balance oriented for positive force loading via dead weight, the loading for θ_{++} is performed, generating a positive moment via a positive force at a +x distance (see Figure 4 for coordinate system). The second loading obtains θ_{+-}, a negative moment generated by a positive force at a -x distance, with the polarity of the moment changing by applying the load to the opposite moment arm while retaining the balance orientation. After these two are completed, the balance will be rotated 180 degrees about its X-axis so that the polarity of the applied force changes, and loadings for θ_{-+} and θ_{--} are obtained in the same way as those with positive force. These individual points based on the form of Eq. 18 yields Eqs. 19-22.

We have more equations than unknown coefficients and by having all four unique full-scale outputs we are able to effectively average out the influence of the small auxiliary force applied by adding Eqs. 19 and 21 and Eqs. 20 and 22 producing Eqs. 23 and 24.

The resulting equations feature first order coefficients of opposite polarity, and second order coefficients of the same polarity. Taking the difference between (23) and (24) isolates the β_M coefficient as shown in Eq. (25), while adding (23) and (24) isolates β_{M^2} as shown in Eq.(26).

3.5 Single Moment with Large Auxiliary Force

In order to derive force by moment interaction coefficients in the matrix, full-scale moments are applied in combination with full-scale forces. This results in the same general form of Eq. 17 presented in the previous section. Also similar to last section, the initial θ_0 point of each run begins with an auxiliary load at moment center. However, in this case the auxiliary load is the full-scale applied force. The transfer load is moved in increments onto the moment arm, generating the

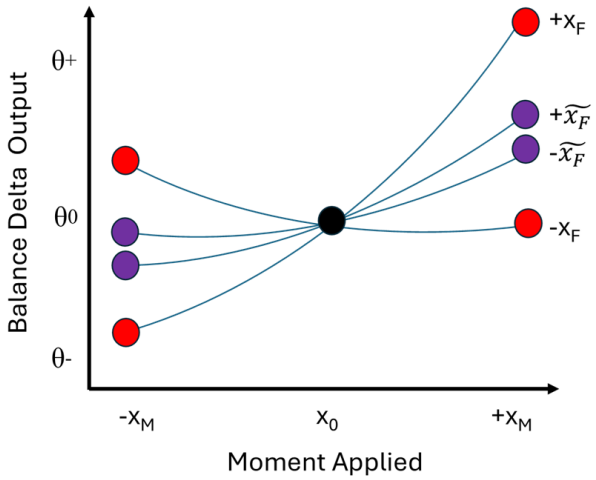

Figure 8.—Plot illustrating four unique blue0colored full-scale outputs from four individual runs used to estimate moment coefficients and four unique red-colored full-scale outputs used to estimate force by moment interaction coefficients (discussed in next section).

$$\theta_{++} = \beta_M(+x_M) + \beta_{M^2}(+x_M)^2 + \beta_{FM}(+\widetilde{x_F})(+x_M) \tag{19}$$
$$\theta_{+-} = \beta_M(-x_M) + \beta_{M^2}(-x_M)^2 + \beta_{FM}(+\widetilde{x_F})(-x_M) \tag{20}$$
$$\theta_{-+} = \beta_M(+x_M) + \beta_{M^2}(+x_M)^2 + \beta_{FM}(-\widetilde{x_F})(+x_M) \tag{21}$$
$$\theta_{--} = \beta_M(-x_M) + \beta_{M^2}(-x_M)^2 + \beta_{FM}(-\widetilde{x_F})(-x_M) \tag{22}$$

$$(19) + (21) = \theta_{++} + \theta_{-+} = 2\beta_M(+x_M) + 2\beta_{M^2}(+x_M)^2 \tag{23}$$
$$(20) + (22) = \theta_{+-} + \theta_{--} = 2\beta_M(-x_M) + 2\beta_{M^2}(-x_M)^2 \tag{24}$$

$$(23) - (24) = (\theta_{++} + \theta_{-+}) - (\theta_{+-} + \theta_{--}) = 4\beta_M(+x_M) \tag{25}$$
$$(23) + (24) = (\theta_{++} + \theta_{-+}) + (\theta_{+-} + \theta_{--}) = 4\beta_{M^2}(+x_M)^2 \tag{26}$$

$$\downarrow$$

$$\beta_M = \frac{(\theta_{++} + \theta_{-+}) - (\theta_{+-} + \theta_{--})}{4(x_M)} \qquad \beta_{M^2} = \frac{(\theta_{++} + \theta_{-+}) + (\theta_{+-} + \theta_{--})}{4(x_M)^2}$$

required moments while keeping the full-scale applied force constant. This is reflected in $\Delta\theta_{FxM}$ (Eq. 27) where the β_F and β_{F^2} are omitted from the equation since $\Delta x_F = 0$. As opposed to the last section, the remaining x_F coefficient in Eq 27 is the full-scale load.

$$\Delta\theta_{F\times M} = \beta_M(x_M) + \beta_{M^2}(x_M^2) + \beta_{FM}(x_F)(x_M) \tag{27}$$

For force x moment interaction loadings, four unique runs are performed as depicted by the red-colored points in Figure 8. Similar to the previous section this consists of applying a positive moment with a positive force (θ_{++}), a negative moment with a positive force (θ_{+-}), a positive moment with a negative force (θ_{-+}), and a negative moment with a negative force (θ_{--}). However, unlike the last section all forces are applied at full-scale. These individual points applied to Eq. 27 yields Eqs. 28-31.

$$\theta_{++} = \beta_M(+x_M) + \beta_{M^2}(+x_M)^2 + \beta_{FM}(+x_F)(+x_M) \tag{28}$$

$$\theta_{+-} = \beta_M(-x_M) + \beta_{M^2}(-x_M)^2 + \beta_{FM}(+x_F)(-x_M) \tag{29}$$

$$\theta_{-+} = \beta_M(+x_M) + \beta_{M^2}(+x_M)^2 + \beta_{FM}(-x_F)(+x_M) \tag{30}$$

$$\theta_{--} = \beta_M(-x_M) + \beta_{M^2}(-x_M)^2 + \beta_{FM}(-x_F)(-x_M) \tag{31}$$

Note that we have more equations than unknown coefficients and therefore can again take advantage of averaging. In this case, we can add Eq. 28 with 31 and Eq. 29 with 30 to produce:

$$(28) + (31) = \theta_{++} + \theta_{--} = 2\beta_{M^2}(+x_M)^2 + 2\beta_{FM}(x_F)(x_M) \tag{32}$$

$$(29) + (30) = \theta_{+-} + \theta_{-+} = 2\beta_{M^2}(+x_M)^2 - 2\beta_{FM}(x_F)(x_M) \tag{33}$$

Subtracting Eq 33 from Eq 32 allows us to estimate for β_{FM}:

$$\beta_{FM} = \frac{(\theta_{++} + \theta_{--}) - (\theta_{+-} + \theta_{-+})}{4(x_F)(x_M)}$$

4 First Order and Pure Quadratic Coefficients

The primary load schedule, as shown in Table 2, features a total of 17 run codes (18 including code 1010) to estimate the first order and pure quadratic coefficients. Each component will estimate one primary sensitivity constant and eleven interactions terms (five linear and six quadratic coefficients). The primary sensitivity is unique for each component. As an example, the linear AF term is the primary sensitivity for the AF component and it can be estimated using runs 10 and 1010. For the NF component, the linear NF term is the primary sensitivity for the NF component and it can be estimated using runs 20 and 50.

As outlined in the nomenclature section, NF, AF, PM, RM, YM, SF will be represented in all future equations by the subscripts N, A, m, l, n, S to minimize subscript length.

4.1 Axial Force Coefficients

Axial force loadings for the AF and AF^2 coefficients are performed with the balance mounted with its X axis aligned with gravity. An example of this setup can be seen in Figure 9. Unlike other loads, a negative axial force must typically be applied via a yoke, eye-bolt, or rod end bearing affixed into the front surface of the balance fixture, as the mounting of the non-metric end of the balance usually precludes use of a weight hanger on the rear surface of the fixture. Due to the

Run Codes	Coefficients Obtained	Section
10,1010	β_A , β_{A^2}	4.1
20,50	β_N , β_{N^2}	4.2
30,60,1030,1060	β_m , β_{m^2}	4.3
40,70,1040,1070	β_l , β_{l^2}	4.4
80,100	β_S , β_{S^2}	4.2
90,110,1090,1110	β_n, β_{n^2}	4.3

Table 2.—Primary calibration run codes and the coefficients obtained. The section column lists the section of the document where the respective coefficient is derived.

fact that negative axial force is associated with thrust, a force that is not frequently measured in wind-tunnel testing, run 1010 is frequently omitted from primary calibrations. If both loadings are performed then the equations for θ_{10} and θ_{1010} can be used to determine β_A and β_{A^2} as shown below.



Figure 9.—Balance configured for application of positive and negative AF loads.

$$\theta_{10} = \beta_A(+x_A) + \beta_{A^2}(+x_A)^2$$

$$\theta_{1010} = \beta_A(-x_A) + \beta_{A^2}(-x_A)^2$$

$$\downarrow$$

$$\beta_A = \frac{\theta_{10} - \theta_{1010}}{2(x_A)} \qquad \beta_{A^2} = \frac{\theta_{10} + \theta_{1010}}{2(x_A)^2}$$

If run 1010 has been omitted, then the midpoint from run 10 is required to obtain the coefficients. By averaging the ascending and descending midpoints, we obtain the equation for $\theta_{A/2}$.

$$\theta_{A/2} = \beta_A(\frac{+x_A}{2}) + \beta_{A^2}(\frac{+x_A{}^2}{2})$$

$\theta_{A/2}$ is distinct from θ_{10} and linear operations may be used to obtain the following expressions for the AF and AF^2 coefficients.

$$\beta_A = \frac{4\theta_{A/2} - \theta_{10}}{x_A} \qquad \beta_{A^2} = \frac{2\theta_{10} - 4\theta_{A/2}}{(x_A)^2}$$

4.2 Normal and Side Force Coefficients

Normal and side force loadings are applied via dead weight on a knife edge hanger at moment center, an example of which can be seen in Figure 10.

To estimate for β_N and β_{N^2}, runs 20 and 50 are performed resulting in the algebraic expressions for θ_{20} and θ_{50}.

$$\theta_{20} = \beta_N(+x_N) + \beta_{N^2}(+x_N)^2$$

$$\theta_{50} = \beta_N(-x_N) + \beta_{N^2}(-x_N)^2$$

$$\downarrow$$

$$\beta_N = \frac{\theta_{20} - \theta_{50}}{2(x_N)} \qquad \beta_{N^2} = \frac{\theta_{20} + \theta_{50}}{2(x_N)^2}$$

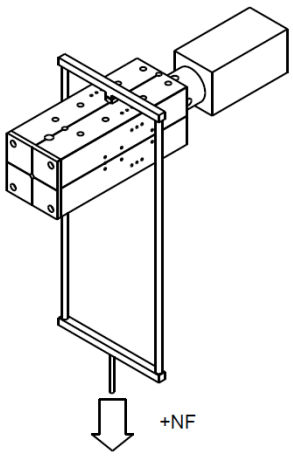

Figure 10.—Balance mounted for application of +NF. Loads for -NF and ±SF are also applied via this same configuration by rotating the balance about its roll axis.

Likewise, β_S and β_{S^2} are estimated via runs 80 and 100 resulting in expressions for θ_{80} and θ_{100}.

$$\theta_{80} = \beta_S(+x_S) + \beta_{S^2}(+x_S)^2$$
$$\theta_{100} = \beta_S(-x_S) + \beta_{S^2}(-x_S)^2$$
$$\downarrow$$
$$\beta_S = \frac{\theta_{80} - \theta_{100}}{2(x_S)} \qquad \beta_{S^2} = \frac{\theta_{80} + \theta_{100}}{2(x_S)^2}$$

4.3 Pitching and Yawing Moment Coefficients

PM loadings feature the same balance positioning as those for NF, with two loadings taken for each polarity of moment at each orientation. These four runs require use of the pitch moment arm that is affixed to the lower surface of the fixture (usually via a purpose-made adapter), providing the moment arm for the transfer of force. An example of this configuration can be seen in Figure 11. The θ_0 for PM is taken with the normal force auxiliary load on the hanger at moment center. This load is then incrementally transferred out to the load point.

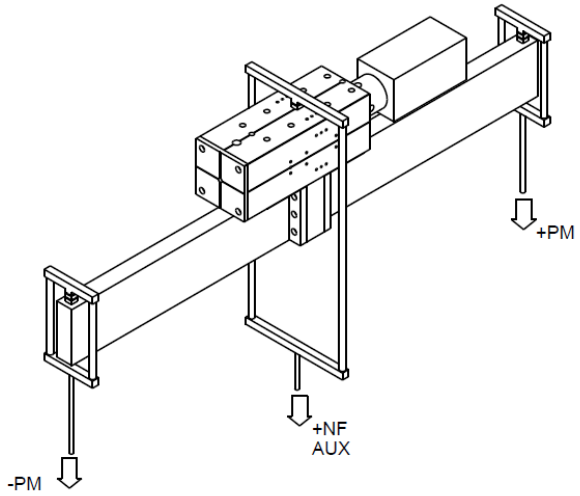

Figure 11.—Balance mounted in standard position with moment arm attachments for application of +PM via auxiliary transfer of NF. Loads for -PM and ±YM via auxiliary transfer of SF are also applied via this same configuration by rotating the balance about its roll axis.

Runs 30, 60, 1030, and 1060 produce the equations that follow that are used to solve for β_m and β_{m^2}. Note that it is possible to solve for these coefficients without all four runs but they are performed to maintain symmetry of loading. Also, note that the small amount of NF auxiliary used to generate PM is designated with a tilde.

In the same way that SF loadings follow the procedure for NF, YM loadings follow the same procedure for PM. The balance is oriented in ±SF with a moment arm used to generate yaw moment. The auxiliary side force is applied at moment center for θ_0 of each run and then incrementally moved for moment application.

Runs 90, 1090, 110, and 1110 produce the following expressions for the first and second order YM coefficients (β_n and β_{n^2}).

$$\theta_{30} = \beta_m(+x_m) + \beta_{m^2}(+x_m)^2 + \beta_{Nm}(\widetilde{+x_N})(+x_m)$$
$$\theta_{1030} = \beta_m(-x_m) + \beta_{m^2}(-x_m)^2 + \beta_{Nm}(\widetilde{+x_N})(-x_m)$$
$$\theta_{60} = \beta_m(+x_m) + \beta_{m^2}(+x_m)^2 + \beta_{Nm}(\widetilde{-x_N})(+x_m)$$
$$\theta_{1060} = \beta_m(-x_m) + \beta_{m^2}(-x_m)^2 + \beta_{Nm}(\widetilde{-x_N})(-x_m)$$
$$\downarrow$$
$$\beta_m = \frac{(\theta_{30} + \theta_{60}) - (\theta_{1030} + \theta_{1060})}{4(x_m)} \qquad \beta_{m^2} = \frac{(\theta_{30} + \theta_{60}) + (\theta_{1030} + \theta_{1060})}{4(x_m)^2}$$

$$\theta_{90} = \beta_n(+x_n) + \beta_{n^2}(+x_n)^2 + \beta_{Sn}(\widetilde{+x_S})(+x_n)$$
$$\theta_{1090} = \beta_n(-x_n) + \beta_{n^2}(-x_n)^2 + \beta_{Sn}(\widetilde{+x_S})(-x_n)$$
$$\theta_{110} = \beta_n(+x_n) + \beta_{n^2}(+x_n)^2 + \beta_{Sn}(\widetilde{-x_S})(+x_n)$$
$$\theta_{1110} = \beta_n(-x_n) + \beta_{n^2}(-x_n)^2 + \beta_{Sn}(\widetilde{-x_S})(-x_n)$$
$$\downarrow$$
$$\beta_n = \frac{(\theta_{90} + \theta_{110}) - (\theta_{1090} + \theta_{1110})}{4(x_n)} \qquad \beta_{n^2} = \frac{(\theta_{90} + \theta_{110}) + (\theta_{1090} + \theta_{1110})}{4(x_n)^2}$$

4.4 Rolling Moment Coefficients

The coefficients for RM are found via a similar method to the PM and YM coefficients, albeit with the use of roll moment arms rather than the pitch/yaw moment arms. An example of this setup may be seen in Figure 12. The calculation of the RM coefficient is unique in that four runs in the NF orientation (codes 40, 1040, 70, and 1070) and four runs in the SF orientation (codes 180, 1180, 120, and 1120) are used for coefficient estimation. Note that fewer runs are required to solve for the coefficients, but part of the rationale for all of these runs is that they are also used to estimate the NFxRM and SFxRM terms later on.

The 8 codes produce the following equations which can be used to solve for the first and second order RM coefficients (β_l and β_{l^2}).

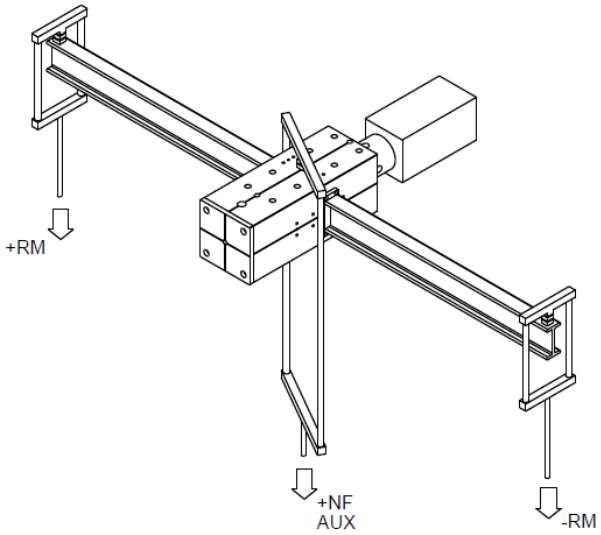

Figure 12.—Balance mounted in standard position with moment arm attachments for application of ±RM via auxiliary transfer of +NF. RM may also be applied by rotating the balance about its roll axis for application of -NF or ±SF.

$$\theta_{40} = \beta_l(+x_l) + \beta_{l^2}(+x_l)^2 + \beta_{Nl}(\widetilde{+x_N})(+x_l)$$
$$\theta_{1040} = \beta_l(-x_l) + \beta_{l^2}(-x_l)^2 + \beta_{Nl}(\widetilde{+x_N})(-x_l)$$
$$\theta_{70} = \beta_l(+x_l) + \beta_{l^2}(+x_l)^2 + \beta_{Nl}(\widetilde{-x_N})(+x_l)$$
$$\theta_{1070} = \beta_l(-x_l) + \beta_{l^2}(-x_l)^2 + \beta_{Nl}(\widetilde{-x_N})(-x_l)$$
$$\theta_{180} = \beta_l(+x_l) + \beta_{l^2}(+x_l)^2 + \beta_{Sl}(\widetilde{+x_S})(+x_l)$$
$$\theta_{1180} = \beta_l(-x_l) + \beta_{l^2}(-x_l)^2 + \beta_{Sl}(\widetilde{+x_S})(-x_l)$$
$$\theta_{120} = \beta_l(+x_l) + \beta_{l^2}(+x_l)^2 + \beta_{Sl}(\widetilde{-x_S})(+x_l)$$
$$\theta_{1120} = \beta_l(-x_l) + \beta_{l^2}(-x_l)^2 + \beta_{Sl}(\widetilde{-x_S})(-x_l)$$

$$\downarrow$$

$$\beta_l = \frac{(\theta_{40} + \theta_{70}) - (\theta_{1040} + \theta_{1070}) + (\theta_{180} + \theta_{120}) - (\theta_{1180} + \theta_{1120})}{8(x_l)}$$

$$\beta_{l^2} = \frac{(\theta_{40} + \theta_{70}) + (\theta_{1040} + \theta_{1070}) + (\theta_{180} + \theta_{120}) + (\theta_{1180} + \theta_{1120})}{8(x_l)^2}$$

5 Two-Factor Interaction Coefficients

The remaining 15 coefficients for each component are found via combination loads that apply forces and moments to more than one component simultaneously to exercise the associated interaction coefficient. See Table 3 for a list of the remaining coefficients and the unique run codes used to solve for them. For these runs, one component of load is incremented while the other component of load is held constant. Solving for the two-factor interaction coefficients typically involves targeted run codes that exercise the coefficient of interest and supporting codes that mathematically isolate the component of interest.

Run Codes	Coefficients Obtained	Supporting Codes	Section
330,320	β_{NA}	20,50	5.1
220,260,1220,1260	β_{Nm}	30,1030,60,1060	5.3
230,270,1230,1270	β_{Nl}	40,1040,70,1070	5.4
420,470	β_{Nn}	400,460	5.2
400,460	β_{NS}	20,50	5.2
340,300,1340,1300	β_{Am}	30,1030,60,1060	5.5
350,310,1350,1310	β_{Al}	40,1040,70,1070	5.5
370,380,1370,1380	β_{An}	90,110,1090,1110	5.5
360,390	β_{SA}	80,100	5.1
240,250,280,290,1240,1250,1280,1290	β_{ml}	N/A	5.7
440,510,1440,1510	β_{mn}	430,490,1430,1490	5.6
430,490,1430,1490	β_{mS}	30,60,1030,1060	5.6
200,210,140,150,1140,1150,1200,1210	β_{nl}	N/A	5.7
190,130,1190,1130	β_{Sl}	180,120,1180,1120	5.4
170,160,1170,1160	β_{Sn}	90,110,1090,1110	5.3

Table 3.—Two-factor interaction coefficients and the run codes used to solve for them including the targeted run codes and supporting codes. The section column lists the section of the document where the respective coefficient is derived.

5.1 Normal Force × Axial Force and Side Force × Axial Force Coefficients

The interactions of NF×AF and SF×AF are accomplished via the same general procedure, as these are simply a repeat of the primary loadings for NF and SF with the addition of +AF applied via a perpendicular cable load. AF is kept constant as an auxiliary load, while the balance is rotated longitudinally to the appropriate orientation for each dead weight primary loading. This stand configuration is shown in Figure 13.

Runs 330 and 320 load NF as the primary load and full AF as the auxiliary producing equations θ_{330} and θ_{320} shown below. The first and second order AF coefficients are constant, and may be omitted due to no effect on $\Delta\theta$. To estimate for β_{NA}, θ_{20} and θ_{50} are used to remove the NF coefficients from θ_{330} and θ_{320}.

Runs 360 and 390 load SF as the primary load and full AF as the auxiliary load producing equations θ_{360} and θ_{390}. Again, the first and second order AF coefficients may be omitted, while θ_{80} and θ_{100} are used to remove the SF coefficients and estimate for β_{SA}.

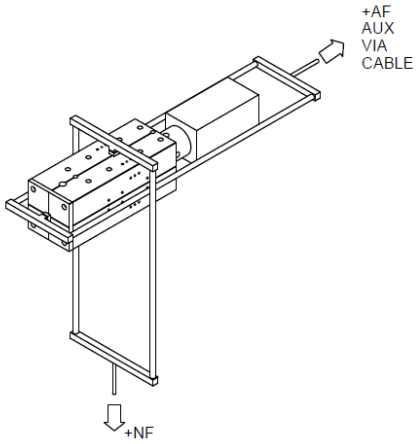

Figure 13.—Balance mounted for +NF with auxiliary +AF via cable for NF×AF runs.

$$\theta_{330} = \beta_N(+x_N) + \beta_{N^2}(+x_N)^2 + \beta_{NA}(+x_N)(+x_A)$$
$$\theta_{320} = \beta_N(-x_N) + \beta_{N^2}(-x_N)^2 + \beta_{NA}(-x_N)(+x_A)$$
$$\downarrow$$
$$\beta_{NA} = \frac{(\theta_{330} - \theta_{20}) - (\theta_{320} - \theta_{50})}{2(x_N)(x_A)}$$

$$\theta_{360} = \beta_S(+x_S) + \beta_{S^2}(+x_S)^2 + \beta_{SA}(+x_S)(+x_A)$$
$$\theta_{390} = \beta_S(-x_S) + \beta_{S^2}(-x_S)^2 + \beta_{SA}(-x_S)(+x_A)$$
$$\downarrow$$
$$\beta_{SA} = \frac{(\theta_{360} - \theta_{80}) - (\theta_{390} - \theta_{100})}{2(x_S)(x_A)}$$

5.2 Normal Force × Side Force and Normal Force × Yawing Moment Coefficients

The runs for the interaction coefficient of NF×SF are similar to those of NF×AF. The +SF cable load is applied to the side of the fixture at moment center instead of the front surface, as shown in Figure 14. The balance is rotated longitudinally to the appropriate orientation for each polarity of NF for each loading.

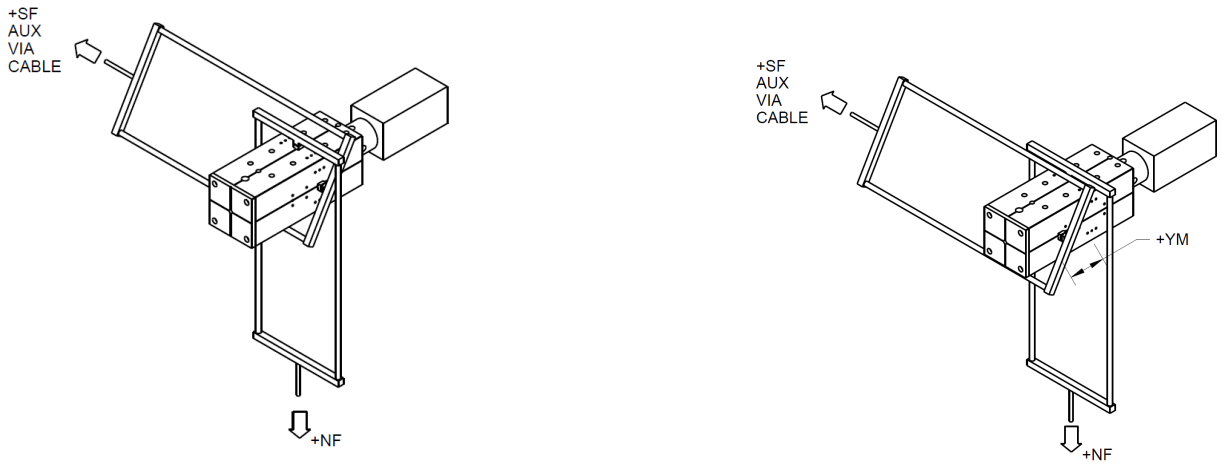

Figure 14.—Balance mounted for +NF with +SF cable load for both NF×SF and NF×YM runs. To produce +YM the SF cable load is moved forward or aft of the balance moment center.

Runs 400 and 460 load NF as the primary load, and full SF as the auxiliary load producing the equations for θ_{400} and θ_{460} shown below. The first and second order SF coefficients may be omitted as they are constant and do not affect $\Delta\theta$. These equations are combined with θ_{20} and θ_{50} to remove the NF coefficients allowing for the determination of β_{NS}.

$$\theta_{400} = \beta_N(+x_N) + \beta_{N^2}(+x_N)^2 + \beta_{NS}(+x_N)(+x_S)$$
$$\theta_{460} = \beta_N(-x_N) + \beta_{N^2}(-x_N)^2 + \beta_{NS}(-x_N)(+x_S)$$
$$\downarrow$$
$$\beta_{NS} = \frac{(\theta_{400} - \theta_{20}) - (\theta_{460} - \theta_{50})}{2(x_N)(x_S)}$$

The loadings for NF×YM are similar to those for NF×SF in setup. Instead of applying the SF cable load at moment center, the SF cable is moved toward the front of the fixture, applying a constant side force and yawing moment. Unlike other moment loadings, only two runs are performed to find β_{Nn}.

Runs 420 and 470 load NF as the primary load, and full YM as the auxiliary load to produce equations θ_{420} and θ_{470}. Equations θ_{400} and θ_{460} are subtracted from θ_{420} and θ_{470} respectively to isolate β_{Nn}. This assumes that the applied SF is the same in codes 420, 470, 400, and 460.

$$\theta_{420} = \beta_N(+x_N) + \beta_{N^2}(+x_N)^2 + \beta_{NS}(+x_N)(+x_S) + \beta_{Nn}(+x_N)(+x_n)$$
$$\theta_{470} = \beta_N(-x_N) + \beta_{N^2}(-x_N)^2 + \beta_{NS}(-x_N)(+x_S) + \beta_{Nn}(-x_N)(+x_n)$$
$$\downarrow$$
$$\beta_{Nn} = \frac{(\theta_{420} - \theta_{400}) - (\theta_{470} - \theta_{460})}{2(x_N)(x_n)}$$

5.3 Normal Force × Pitching Moment and Side Force × Yawing Moment Coefficients

The loadings for β_{Nm} and β_{Sn} use the same setup as the associated loadings from the primary calibration, as shown in Figure 11. Unlike the primary loadings, for the reading of θ_0 the force component is loaded to full-scale at moment center. The transfer load is then moved from this central weight hanger to maintain the constant auxiliary load, while exercising the combined coefficient. The first- and second-order normal force coefficients may still be omitted, because they do not change in sign or magnitude, and thus do not contribute to $\Delta\theta$.

The NF×PM runs yield equations θ_{220}, θ_{1220}, θ_{260}, and θ_{1260}. To estimate for β_{Nm}, the equations featuring NF×PM are combined with the pitch loads (codes 30, 60, 1030, and 1060) to produce the equation for β_{Nm}.

$$\theta_{220} = \beta_m(+x_m) + \beta_{m^2}(+x_m)^2 + \beta_{Nm}(+x_N)(+x_m)$$
$$\theta_{1220} = \beta_m(-x_m) + \beta_{m^2}(-x_m)^2 + \beta_{Nm}(+x_N)(-x_m)$$
$$\theta_{260} = \beta_m(+x_m) + \beta_{m^2}(+x_m)^2 + \beta_{Nm}(-x_N)(+x_m)$$
$$\theta_{1260} = \beta_m(-x_m) + \beta_{m^2}(-x_m)^2 + \beta_{Nm}(-x_N)(-x_m)$$
$$\downarrow$$
$$\beta_{Nm} = \frac{((\theta_{220} - \theta_{30}) + (\theta_{1260} - \theta_{1060})) - ((\theta_{1220} - \theta_{1030}) + (\theta_{260} - \theta_{60}))}{4(x_N - \widetilde{x_N})(x_m)}$$

The SF×YM runs are performed in similar configuration as the NF×PM runs, except that the balance is rotated for SF in line with gravity. The SF×YM runs yield equations θ_{170}, θ_{1170}, θ_{160}, and θ_{1160}. To estimate for β_{Sn}, the equations are combined with the yaw loadings (codes 90, 110, 1090, and 1110) to yield the expression for β_{Sn}.

$$\theta_{170} = \beta_n(+x_n) + \beta_{n^2}(+x_n)^2 + \beta_{Sn}(+x_S)(+x_n)$$
$$\theta_{1170} = \beta_n(-x_n) + \beta_{n^2}(-x_n)^2 + \beta_{Sn}(+x_S)(-x_n)$$
$$\theta_{160} = \beta_n(+x_n) + \beta_{n^2}(+x_n)^2 + \beta_{Sn}(-x_S)(+x_n)$$
$$\theta_{1160} = \beta_n(-x_n) + \beta_{n^2}(-x_n)^2 + \beta_{Sn}(-x_S)(-x_n)$$
$$\downarrow$$
$$\beta_{Sn} = \frac{((\theta_{170} - \theta_{90}) + (\theta_{1160} - \theta_{1110})) - ((\theta_{1170} - \theta_{1090}) + (\theta_{160} - \theta_{110}))}{4(x_S - \widetilde{x_S})(x_n)}$$

5.4 Normal Force × Rolling Moment, Side Force × Rolling Moment Coefficients

The loadings for β_{Nl} and β_{Sl} use the same setup as the RM runs from the primary calibration, as shown in Figure 12. For the reading of θ_0 the force component is again loaded to full-scale at moment center. The transfer load is moved from this central weight hanger to maintain the constant auxiliary load, exercising the combined RM coefficient.

$$\theta_{230} = \beta_l(+x_l) + \beta_{l^2}(+x_l)^2 + \beta_{Nl}(+x_N)(+x_l)$$
$$\theta_{1230} = \beta_l(-x_l) + \beta_{l^2}(-x_l)^2 + \beta_{Nl}(+x_N)(-x_l)$$
$$\theta_{270} = \beta_l(+x_l) + \beta_{l^2}(+x_l)^2 + \beta_{Nl}(-x_N)(+x_l)$$
$$\theta_{1270} = \beta_l(-x_l) + \beta_{l^2}(-x_l)^2 + \beta_{Nl}(-x_N)(-x_l)$$
$$\downarrow$$
$$\beta_{Nl} = \frac{((\theta_{230} - \theta_{40}) + (\theta_{1270} - \theta_{1070})) - ((\theta_{1230} - \theta_{1040}) + (\theta_{270} - \theta_{70}))}{4(x_N - \widetilde{x_N})(x_l)}$$

The NF×RM runs produce equations θ_{230}, θ_{1230}, θ_{270}, and θ_{1270}. To estimate for β_{Nl}, the equations are combined with the RM in NF runs (codes 40, 1040, 70, and 1070).

The runs for the SF×RM loading yield equations θ_{190}, θ_{1190}, θ_{130}, and θ_{1130}. To estimate for β_{Sl}, the equations featuring SF×RM coefficients are combined with the RM in SF terms (codes 180, 1180, 120, and 1120).

$$\theta_{190} = \beta_l(+x_l) + \beta_{l^2}(+x_l)^2 + \beta_{Sl}(+x_S)(+x_l)$$
$$\theta_{1190} = \beta_l(-x_l) + \beta_{l^2}(-x_l)^2 + \beta_{Sl}(+x_S)(-x_l)$$
$$\theta_{130} = \beta_l(+x_l) + \beta_{l^2}(+x_l)^2 + \beta_{Sl}(-x_S)(+x_l)$$
$$\theta_{1130} = \beta_l(-x_l) + \beta_{l^2}(-x_l)^2 + \beta_{Sl}(-x_S)(-x_l)$$
$$\downarrow$$
$$\beta_{Sl} = \frac{((\theta_{190} - \theta_{180}) + (\theta_{1130} - \theta_{1120})) - ((\theta_{1190} - \theta_{1180}) + (\theta_{130} - \theta_{120}))}{4(x_S - \widetilde{x_S})(x_l)}$$

5.5 Axial Force × Pitching Moment, Axial Force × Yawing Moment, and Axial Force × Rolling Moment Coefficients

The AF × moment loadings are effectively repeats of the primary calibration loadings for PM in NF, YM in SF, and RM in NF, with the addition of a secondary positive axial cable load applied to the front of the balance fixture. This configuration is shown in Figure 15 for AF×PM and AF×YM, and Figure 16 for AF×RM. Since AF is a constant auxiliary in all of the cases only the AF combined interaction coefficient will be added to the equations in this section.

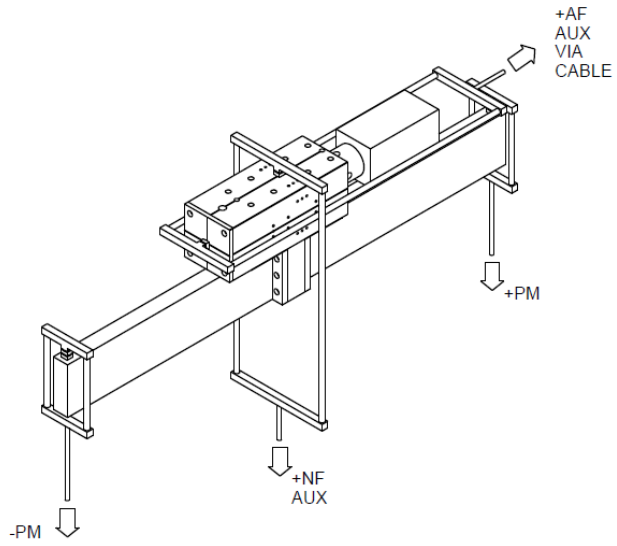

Figure 15.—Balance mounted with moment arm attachments for application of +PM via auxiliary transfer of NF, with an additional auxiliary cable load for AF. Loads for -PM and ±YM via auxiliary transfer of SF are also applied via this same configuration by rotating the balance about its roll axis.

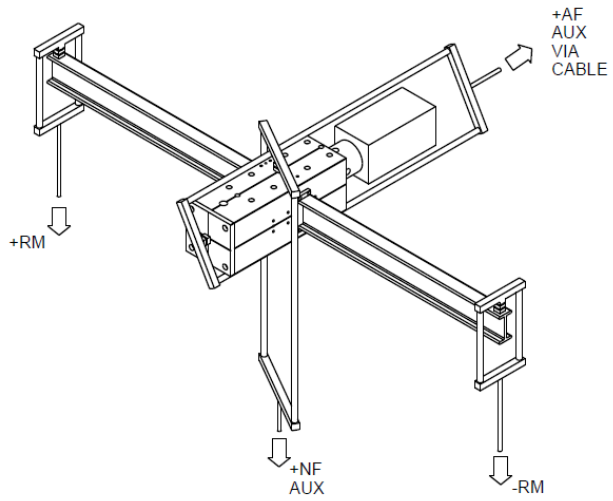

Figure 16.—Balance mounted with moment arm attachments for application of ±RM via auxiliary transfer of +NF, with an additional auxiliary cable load for AF.

The AF×PM runs yield equations θ_{340}, θ_{1340}, θ_{300}, and θ_{1300}. Subtracting the PM in NF primary calibration runs (codes 30, 60, 1030, and 1060) eliminates the NF and PM coefficients, allowing for β_{Am} to be isolated and estimated.

$$\theta_{340} = \beta_m(+x_m) + \beta_{m^2}(+x_m)^2 + \beta_{Nm}(\widetilde{+x_N})(+x_m) + \beta_{Am}(+x_A)(+x_m)$$
$$\theta_{1340} = \beta_m(-x_m) + \beta_{m^2}(-x_m)^2 + \beta_{Nm}(\widetilde{+x_N})(-x_m) + \beta_{Am}(+x_A)(-x_m)$$
$$\theta_{300} = \beta_m(+x_m) + \beta_{m^2}(+x_m)^2 + \beta_{Nm}(\widetilde{-x_N})(+x_m) + \beta_{Am}(+x_A)(+x_m)$$
$$\theta_{1300} = \beta_m(-x_m) + \beta_{m^2}(-x_m)^2 + \beta_{Nm}(\widetilde{-x_N})(-x_m) + \beta_{Am}(+x_A)(-x_m)$$
$$\downarrow$$
$$\beta_{Am} = \frac{((\theta_{340} - \theta_{30}) + (\theta_{300} - \theta_{60})) - ((\theta_{1340} - \theta_{1030}) + (\theta_{1300} - \theta_{1060}))}{4(x_A)(x_m)}$$

After the balance is rotated, to align SF with gravity, the AF×YM runs yield equations θ_{370}, θ_{1370}, θ_{380}, and θ_{1380}. Subtracting the YM in SF primary calibration runs (codes 90, 110, 1090, and 1110) eliminates the SF and YM coefficients, allowing for β_{An} to be isolated and estimated.

AF×RM runs produce equations θ_{350}, θ_{1350}, θ_{310}, θ_{1310}. Subtracting the RM in NF primary calibration runs (codes 40, 70, 1040, and 1070) eliminates the NF and RM coefficients, allowing β_{Al} to be isolated and estimated.

$$\theta_{370} = \beta_n(+x_n) + \beta_{n^2}(+x_n)^2 + \beta_{Sn}(\widetilde{+x_S})(+x_n) + \beta_{An}(+x_A)(+x_n)$$
$$\theta_{1370} = \beta_n(-x_n) + \beta_{n^2}(-x_n)^2 + \beta_{Sn}(\widetilde{+x_S})(-x_n) + \beta_{An}(+x_A)(-x_n)$$
$$\theta_{380} = \beta_n(+x_n) + \beta_{n^2}(+x_n)^2 + \beta_{Sn}(\widetilde{-x_S})(+x_n) + \beta_{An}(+x_A)(+x_n)$$
$$\theta_{1380} = \beta_n(-x_n) + \beta_{n^2}(-x_n)^2 + \beta_{Sn}(\widetilde{-x_S})(-x_n) + \beta_{An}(+x_A)(-x_n)$$
$$\downarrow$$
$$\beta_{An} = \frac{((\theta_{370} - \theta_{90}) + (\theta_{380} - \theta_{110})) - ((\theta_{1370} - \theta_{1090}) + (\theta_{1380} - \theta_{1110}))}{4(x_A)(x_n)}$$

$$\theta_{350} = \beta_l(+x_l) + \beta_{l^2}(+x_l)^2 + \beta_{Nl}(\widetilde{+x_N})(+x_l) + \beta_{Al}(+x_A)(+x_l)$$
$$\theta_{1350} = \beta_l(-x_l) + \beta_{l^2}(-x_l)^2 + \beta_{Nl}(\widetilde{+x_N})(-x_l) + \beta_{Al}(+x_A)(-x_l)$$
$$\theta_{310} = \beta_l(+x_l) + \beta_{l^2}(+x_l)^2 + \beta_{Nl}(\widetilde{-x_N})(+x_l) + \beta_{Al}(+x_A)(+x_l)$$
$$\theta_{1310} = \beta_l(-x_l) + \beta_{l^2}(-x_l)^2 + \beta_{Nl}(\widetilde{-x_N})(-x_l) + \beta_{Al}(+x_A)(-x_l)$$
$$\downarrow$$
$$\beta_{Al} = \frac{((\theta_{350} - \theta_{40}) + (\theta_{310} - \theta_{70})) - ((\theta_{1350} - \theta_{1040}) + (\theta_{1310} - \theta_{1070}))}{4(x_A)(x_l)}$$

5.6 Pitching Moment × Side Force and Pitching Moment × Yawing Moment Coefficients

The loadings for PM×SF and PM×YM have similar initial setups to the primary calibration assembly for PM in NF, with the addition of a cable load applied to produce +SF and +YM as required. This configuration is demonstrated in Figure 17. Like the primary calibration, a partial NF load is transferred from moment center to generate full PM while keeping NF constant.

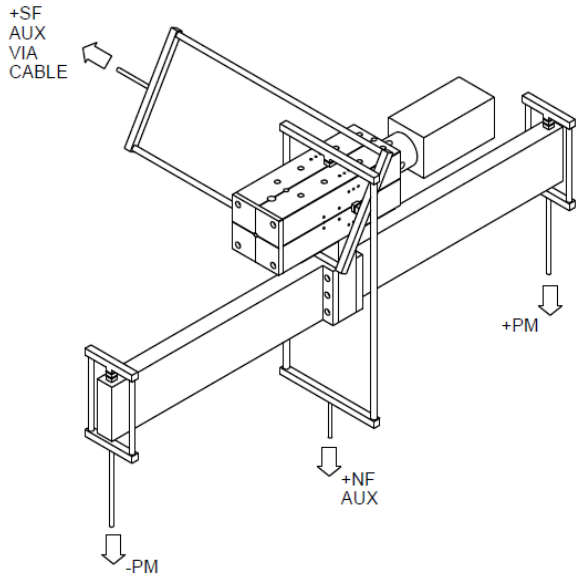

Figure 17.—Balance mounted with moment arm attachments for application of ±PM via auxiliary transfer of NF, with an additional auxiliary cable load for SF.

The PM×SF codes produce equations θ_{430}, θ_{1430}, θ_{490}, and θ_{1490}. The PM in NF runs (codes 30, 1030, 60, and 1060) are then selectively subtracted from these runs producing an equation for β_{mS} shown below.

$$\theta_{430} = \beta_m(+x_m) + \beta_{m^2}(+x_m)^2 + \beta_{Nm}(\widetilde{+x_N})(+x_m) + \beta_{NS}(\widetilde{+x_N})(+x_S) + \beta_{mS}(+x_m)(+x_S)$$

$$\theta_{1430} = \beta_m(-x_m) + \beta_{m^2}(-x_m)^2 + \beta_{Nm}(\widetilde{+x_N})(-x_m) + \beta_{NS}(\widetilde{+x_N})(+x_S) + \beta_{mS}(-x_m)(+x_S)$$

$$\theta_{490} = \beta_m(+x_m) + \beta_{m^2}(+x_m)^2 + \beta_{Nm}(\widetilde{-x_N})(+x_m) + \beta_{NS}(\widetilde{-x_N})(+x_S) + \beta_{mS}(+x_m)(+x_S)$$

$$\theta_{1490} = \beta_m(-x_m) + \beta_{m^2}(-x_m)^2 + \beta_{Nm}(\widetilde{-x_N})(-x_m) + \beta_{NS}(\widetilde{-x_N})(+x_S) + \beta_{mS}(-x_m)(+x_S)$$

$$\theta_{430} - \theta_{30} = \beta_{NS}(\widetilde{+x_N})(+x_S) + \beta_{mS}(+x_m)(+x_S)$$

$$\theta_{1430} - \theta_{1030} = \beta_{NS}(\widetilde{+x_N})(+x_S) + \beta_{mS}(-x_m)(+x_S)$$

$$\theta_{490} - \theta_{60} = \beta_{NS}(\widetilde{-x_N})(+x_S) + \beta_{mS}(+x_m)(+x_S)$$

$$\theta_{1490} - \theta_{1060} = \beta_{NS}(\widetilde{-x_N})(+x_S) + \beta_{mS}(-x_m)(+x_S)$$

$$\downarrow$$

$$\beta_{mS} = \frac{((\theta_{430} - \theta_{30}) + (\theta_{490} - \theta_{60})) - ((\theta_{1430} - \theta_{1030}) + (\theta_{1490} - \theta_{1060}))}{4(x_m)(x_S)}$$

The runs for PM×YM feature +SF applied forward of moment center via a cable load. These runs produce equations θ_{440}, θ_{1440}, θ_{510}, and θ_{1510}. The PM×SF runs (codes 430, 1430, 490, and 1490) are then selectively subtracted from these runs producing an equation for β_{mn} shown below.

$$\theta_{440} = \beta_m(+x_m) + \beta_{m^2}(+x_m)^2 + \beta_{Nm}(\widetilde{+x_N})(+x_m) + \beta_{NS}(\widetilde{+x_N})(+x_S) + \beta_{mS}(+x_m)(+x_S) + \beta_{Nn}(\widetilde{+x_N})(+x_n) + \beta_{mn}(+x_m)(+x_n)$$

$$\theta_{1440} = \beta_m(-x_m) + \beta_{m^2}(-x_m)^2 + \beta_{Nm}(\widetilde{+x_N})(-x_m) + \beta_{NS}(\widetilde{+x_N})(+x_S) + \beta_{mS}(-x_m)(+x_S) + \beta_{Nn}(\widetilde{+x_N})(+x_n) + \beta_{mn}(-x_m)(+x_n)$$

$$\theta_{510} = \beta_m(+x_m) + \beta_{m^2}(+x_m)^2 + \beta_{Nm}(\widetilde{-x_N})(+x_m) + \beta_{NS}(\widetilde{-x_N})(+x_S) + \beta_{mS}(+x_m)(+x_S) + \beta_{Nn}(\widetilde{-x_N})(+x_n) + \beta_{mn}(+x_m)(+x_n)$$

$$\theta_{1510} = \beta_m(-x_m) + \beta_{m^2}(-x_m)^2 + \beta_{Nm}(\widetilde{-x_N})(-x_m) + \beta_{NS}(\widetilde{-x_N})(+x_S) + \beta_{mS}(-x_m)(+x_S) + \beta_{Nn}(\widetilde{-x_N})(+x_n) + \beta_{mn}(-x_m)(+x_n)$$

$$\downarrow$$

$$\theta_{440} - \theta_{430} = \beta_{Nn}(\widetilde{+x_N})(+x_n) + \beta_{mn}(+x_m)(+x_n)$$

$$\theta_{1440} - \theta_{1430} = \beta_{Nn}(\widetilde{+x_N})(+x_n) + \beta_{mn}(-x_m)(+x_n)$$

$$\theta_{510} - \theta_{490} = \beta_{Nn}(\widetilde{-x_N})(+x_n) + \beta_{mn}(+x_m)(+x_n)$$

$$\theta_{1510} - \theta_{1490} = \beta_{Nn}(\widetilde{-x_N})(+x_n) + \beta_{mn}(-x_m)(+x_n)$$

$$\downarrow$$

$$\beta_{mn} = \frac{((\theta_{440} - \theta_{430}) + (\theta_{510} - \theta_{490})) - ((\theta_{1440} - \theta_{1430}) + (\theta_{1510} - \theta_{1490}))}{4(x_m)(x_n)}$$

5.7 Pitching Moment × Rolling Moment and Yawing Moment × Rolling Moment Coefficients

The runs for PM×RM and YM×RM require both sets of moment arms to be attached to the fixture, combined with five separate weight hangers — one at moment center, and the remaining four at the ends of the pitch and roll arms. Examples of this setup can be seen in Figure 18. Since both moment axes are normal to the gravity vector, no cable loads are required for either set of runs. To estimate for PM×RM, a total of eight runs are performed, changing the polarity of both applied moments as well as the auxiliary normal force. These runs produce equations θ_{240}, θ_{1240}, θ_{250}, θ_{1250}, θ_{280}, θ_{1280}, θ_{290}, and θ_{1290} shown below. The equations are paired together to solve for β_{ml}.

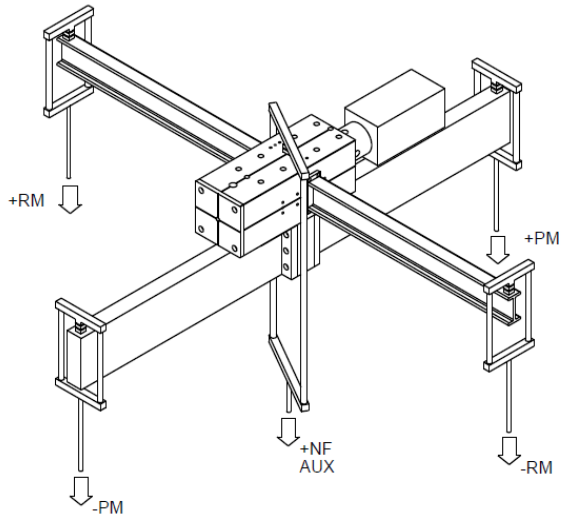

Figure 18.—Balance mounted with moment arm attachments for application of ±PM and ±RM simultaneous via auxiliary transfer of +NF. By rotating the balance longitudinally, ±RM is also produced via -NF, or ±YM is produced via auxiliary ±SF.

$$\theta_{240} = \beta_m(+x_m) + \beta_l(+x_l) + \beta_{m^2}(+x_m)^2 + \beta_{Nm}(\widetilde{+x_N})(+x_m) + \beta_{Nl}(\widetilde{+x_N})(+x_l) + \beta_{ml}(+x_m)(+x_l)$$

$$\theta_{1240} = \beta_m(-x_m) + \beta_l(+x_l) + \beta_{m^2}(-x_m)^2 + \beta_{Nm}(\widetilde{+x_N})(-x_m) + \beta_{Nl}(\widetilde{+x_N})(+x_l) + \beta_{ml}(-x_m)(+x_l)$$

$$\theta_{250} = \beta_m(+x_m) + \beta l(-x_l) + \beta_{m^2}(+x_m)^2 + \beta_{Nm}(\widetilde{+x_N})(+x_m) + \beta_{Nl}(\widetilde{+x_N})(-x_l) + \beta_{ml}(+x_m)(-x_l)$$

$$\theta_{1250} = \beta_m(-x_m) + \beta l(-x_l) + \beta_{m^2}(-x_m)^2 + \beta_{Nm}(\widetilde{+x_N})(-x_m) + \beta_{Nl}(\widetilde{+x_N})(-x_l) + \beta_{ml}(-x_m)(-x_l)$$

$$\theta_{280} = \beta_m(+x_m) + \beta_l(+x_l) + \beta_{m^2}(+x_m)^2 + \beta_{Nm}(\widetilde{-x_N})(+x_m) + \beta_{Nl}(\widetilde{-x_N})(+x_l) + \beta_{ml}(+x_m)(+x_l)$$

$$\theta_{1280} = \beta_m(-x_m) + \beta_l(+x_l) + \beta_{m^2}(-x_m)^2 + \beta_{Nm}(\widetilde{-x_N})(-x_m) + \beta_{Nl}(\widetilde{-x_N})(+x_l) + \beta_{ml}(-x_m)(+x_l)$$

$$\theta_{290} = \beta_m(+x_m) + \beta l(-x_l) + \beta_{m^2}(+x_m)^2 + \beta_{Nm}(\widetilde{-x_N})(+x_m) + \beta_{Nl}(\widetilde{-x_N})(-x_l) + \beta_{ml}(+x_m)(-x_l)$$

$$\theta_{1290} = \beta_m(-x_m) + \beta l(-x_l) + \beta_{m^2}(-x_m)^2 + \beta_{Nm}(\widetilde{-x_N})(-x_m) + \beta_{Nl}(\widetilde{-x_N})(-x_l) + \beta_{ml}(-x_m)(-x_l)$$

$$\downarrow$$

$$\theta_{240} - \theta_{250} = 2\beta_l(x_l) + 2\beta_{Nl}(x_N)(x_l) + 2\beta_{ml}(x_m)(x_l)$$

$$\theta_{280} - \theta_{290} = 2\beta_l(x_l) - 2\beta_{Nl}(x_N)(x_l) + 2\beta_{ml}(x_m)(x_l)$$

$$\theta_{1240} - \theta_{1250} = 2\beta_l(x_l) + 2\beta_{Nl}(x_N)(x_l) - 2\beta_{ml}(x_m)(x_l)$$

$$\theta_{1280} - \theta_{1290} = 2\beta_l(x_l) - 2\beta_{Nl}(x_N)(x_l) - 2\beta_{ml}(x_m)(x_l)$$

$$\downarrow$$

$$\beta_{ml} = \frac{((\theta_{240} - \theta_{250}) + (\theta_{280} - \theta_{290})) - ((\theta_{1240} - \theta_{1250}) + (\theta_{1280} - \theta_{1290}))}{8(x_m)(x_l)}$$

The runs for YM×RM are performed in the same manner as those for PM×RM, except that SF is now used to provide the secondary force for YM and RM. Eight runs produce the equations for θ_{200}, θ_{1200}, θ_{210}, θ_{1210}, θ_{140}, θ_{1140}, θ_{150}, and θ_{1150}, which are used to solve for β_{nl}.

$$\theta_{200} = \beta_n(+x_n) + \beta_l(+x_l) + \beta_{n^2}(+x_n)^2 + \beta_{Sn}(\widetilde{+x_S})(+x_n) + \beta_{Sl}(\widetilde{+x_S})(+x_l) + \beta_{nl}(+x_n)(+x_l)$$

$$\theta_{1200} = \beta_n(-x_n) + \beta_l(+x_l) + \beta_{n^2}(-x_n)^2 + \beta_{Sn}(\widetilde{+x_S})(-x_n) + \beta_{Sl}(\widetilde{+x_S})(+x_l) + \beta_{nl}(-x_n)(+x_l)$$

$$\theta_{210} = \beta_n(+x_n) + \beta l(-x_l) + \beta_{n^2}(+x_n)^2 + \beta_{Sn}(\widetilde{+x_S})(+x_n) + \beta_{Sl}(\widetilde{+x_S})(-x_l) + \beta_{nl}(+x_n)(-x_l)$$

$$\theta_{1210} = \beta_n(-x_n) + \beta l(-x_l) + \beta_{n^2}(-x_n)^2 + \beta_{Sn}(\widetilde{+x_S})(-x_n) + \beta_{Sl}(\widetilde{+x_S})(-x_l) + \beta_{nl}(-x_n)(-x_l)$$

$$\theta_{140} = \beta_n(+x_n) + \beta_l(+x_l) + \beta_{n^2}(+x_n)^2 + \beta_{Sn}(\widetilde{-x_S})(+x_n) + \beta_{Sl}(\widetilde{-x_S})(+x_l) + \beta_{nl}(+x_n)(+x_l)$$

$$\theta_{1140} = \beta_n(-x_n) + \beta_l(+x_l) + \beta_{n^2}(-x_n)^2 + \beta_{Sn}(\widetilde{-x_S})(-x_n) + \beta_{Sl}(\widetilde{-x_S})(+x_l) + \beta_{nl}(-x_n)(+x_l)$$

$$\theta_{150} = \beta_n(+x_n) + \beta l(-x_l) + \beta_{n^2}(+x_n)^2 + \beta_{Sn}(\widetilde{-x_S})(+x_n) + \beta_{Sl}(\widetilde{-x_S})(-x_l) + \beta_{nl}(+x_n)(-x_l)$$

$$\theta_{1150} = \beta_n(-x_n) + \beta l(-x_l) + \beta_{n^2}(-x_n)^2 + \beta_{Sn}(\widetilde{-x_S})(-x_n) + \beta_{Sl}(\widetilde{-x_S})(-x_l) + \beta_{nl}(-x_n)(-x_l)$$

$$\downarrow$$

$$\theta_{200} - \theta_{210} = 2\beta_l(x_l) + 2\beta_{Sl}(\widetilde{x_S})(x_l) + 2\beta_{nl}(x_n)(x_l)$$

$$\theta_{140} - \theta_{150} = 2\beta_l(x_l) - 2\beta_{Sl}(\widetilde{x_S})(x_l) + 2\beta_{nl}(x_n)(x_l)$$

$$\theta_{1140} - \theta_{1150} = 2\beta_l(x_l) + 2\beta_{Sl}(\widetilde{x_S})(x_l) - 2\beta_{nl}(x_n)(x_l)$$

$$\theta_{1200} - \theta_{1210} = 2\beta_l(x_l) - 2\beta_{Sl}(\widetilde{x_S})(x_l) - 2\beta_{nl}(x_n)(x_l)$$

$$\downarrow$$

$$\beta_{nl} = \frac{((\theta_{200} - \theta_{210}) + (\theta_{140} - \theta_{150})) - ((\theta_{1140} - \theta_{1150}) + (\theta_{1200} - \theta_{1210}))}{8(x_n)(x_l)}$$

6 Tare Load Corrections and Proof Loads

Up to this point, the effects of tare loads have not been considered with respect to coefficient estimation. Prior to matrix finalization, select matrix coefficients are corrected for tare loads. In addition, proof loadings are used to validate the calibration matrix since they are not used in coefficient estimation but are used in balance accuracy estimates. Both tare load correction and proof loads will be discussed in this section.

6.1 Tare Load Correction of Select Non-linear Terms

Tare-load correction is essential due to the nonlinear nature of many wind-tunnel balances. Tare loads reflect all the unknown loads applied to the balance during calibration. Common tare loads include weight of the metric part of the balance, the calibration fixture, and weight pans. The larger the degree of non-linearity of a coefficient the more important tare correction is to properly estimating the coefficients. Similarly, the larger the ratio of the preload to the full-scale load of the balance the more important tare load correction is. This is illustrated in Figure 19 where it can clearly be seen that the delta balance output due to applied load, x_F, is dependent on the initial load applied. For instance, if the initial tare load is zero, applying x_F results in a smaller delta output (θ_0) than if x_F is applied in addition to the tare load, x_T, which results in θ_T.

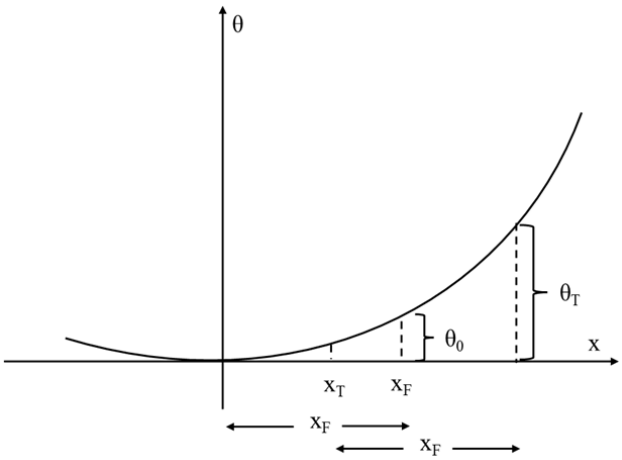

Figure 19.—Illustration of non-linear wind-tunnel balance response to applied load.

If the balance response is linear then preload correction is unnecessary because the amount of delta output due to an applied load is independent of the tare load. Historically, it was determined that for most Langley single-piece balances it is only necessary to tare load correct three coefficients (NF^2, SF^2, and $NFxPM$ on the AF component) out of the entire 6x27 matrix. The three adjusted coefficients are all on the axial force bridge, since the axial force component generally has the coefficients with the highest degree of nonlinearity. The tare load corrections are made using non-iterative solutions developed in the 1950s (Ref. 7, 8). The three corrections are done by estimating for the tare correction constant, Q. Q is dependent on the type of loading being performed. For cases where the nonlinear output is proportional to the square of the load applied (NF^2 and SF^2):

$$Q = 2(\frac{x_T}{x_F}) \tag{34}$$

For cases where one component is held constant while another component is varied (NFxPM):

$$Q = \frac{x_T}{x_F} \tag{35}$$

where x_T is the tare load and x_F is the full-scale load for the non-varied component (in this case NF). Q is then used to make adjustments to the coefficients estimated for using delta outputs and loads as outlined in the previous sections. Specifically, the coefficients are adjusted using the following equation:

$$\beta_{corrected} = \frac{\beta_{uncorrected}}{1 + Q} \tag{36}$$

There are multiple ways to estimate the tare loads including weighing all the components used as part of each calibration sequence or code. We have found it is most practical however to use the balance to estimate the tare load. This is done in practice by averaging the first and last point for each code and expressing this average as a delta from unloaded zero. Multiplying the delta from unloaded zero for the specific component of interest by the primary sensitivity constant for that component generally produces a satisfactory estimate of the tare load.

6.2 Three- and Four-Component Proof Loads

The first of the three-component series is known as the NF, AF, PM proof load sequence. The NF, AF, PM sequence is comprised of 28 steps designated by code 2000. This loading sequence utilizes the pitch moment arms as well as a single axial cable pull to generate the required combinations of loads, as shown in Figure 15.

The remaining three-component proof load series are the 3-component normal and 3-component side proof loads, respectively coded as the 8000 and 9000 series. Functionally, both of these sequences are performed in the same manner, utilizing both sets of moment arms to apply one force and two resultant moments in combination over 35 load configurations. For the 8000 series, the balance is oriented for positive normal force, and pitch and roll are applied via transfer loads from moment center. For the 9000 series, the balance is oriented for positive side force, and yaw and roll are applied via transfer load from moment center. Both sets of proof loads utilize the configuration shown in Figure 18.

A four-component proof load procedure (designated the 3500 series) adds AF to the 3-component positive normal check load procedure. This procedure consists of 44 steps relative to 35 for the 3-component normal.

6.3 Six-component Proof Load

Most Langley balances are designed so that all six axes may be loaded to full-scale at once without damage to the balance. The six component proof load sequence applies all six components simultaneously with the balance mounted in standard (+NF) position. The actual loading sequence takes place over 53 steps and is designated by code 1100. The complexity of the hardware configuration required may be appreciated in Figure 20. Because of the time and labor costs associated with this proof-load sequence, and the low likelihood of a balance experiencing all six components at full-scale during a wind-tunnel test, this loading sequence has been removed from common practice.

Code	NF	AF	PM	RM	YM	SF
2000	X	X	X			
8000	X		X	X		
9000				X	X	X
3500	X	X	X	X		
1100	X	X	X	X	X	X

Table 4.—Proof load codes and their active components

The proof loads are summarized in Table 4 where the code and active components for each code are designated.

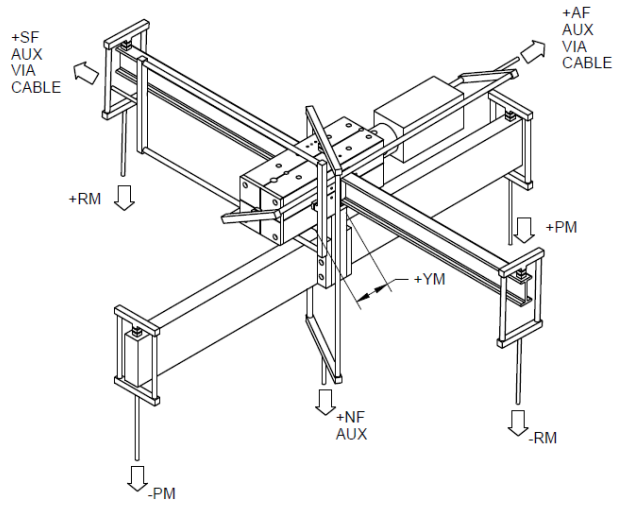

Figure 20.—Balance configured for simultaneous loading of all 6 components for the multicomponent proof load sequence, with moment arm attachments for application of ±PM and ±RM via auxiliary transfer of +NF, an auxiliary cable load forward of moment center for +YM, and an auxiliary cable load for +AF.

7 Calibration Summary Report

The deliverable for a balance calibration consists of several files that interface directly with wind-tunnel data systems, along with a document known as the 8-page summary. The data files include an inverse matrix, which allows estimation of loads exerted on the balance based on the balance electrical output (Ref. 9).

The summary report provides insight into the math model that is used to describe the balance's behavior. While only the most recent calibration data are utilized during wind-tunnel testing, past calibrations are kept in an archive so that the history of a balance can be monitored and any changes can be evaluated against past performance.

7.1 Cover Sheet and Details

The front page of the summary presents the pertinent balance information including full-scale load, full-scale output, sensitivity constant, and accuracy at full-scale for each balance component. The full-scale loads for each channel are those used during calibration. Both US customary and SI values are provided. The channel's sensitivity constant, SC, is the inverse of its associated primary sensitivity, β_{PS}, as shown in equation 37. To estimate full-scale output (FSO) the full-scale applied load (FSL) is divided by the primary sensitivity constant for the associated single-component primary load as shown in equation 38.

$$SC = 1/\beta_{PS} \tag{37}$$

$$FSO = \frac{FSL}{SC} \tag{38}$$

In addition to the above values, calibration notes are included on the cover sheet including that the partitioned method was used, along with any other pertinent information regarding the calibration including load changes. The second page of the summary provides balance details including bridge resistances, wiring color guides and connector details, and deflection constants for the balance under load.

7.1.1 Component Bridge Coefficients

The remaining six pages list the coefficients for each component of the balance. Each page presents the primary sensitivity for that component along with the other 26 matrix interaction coefficients in normalized form and in effect percent of full-scale. The normalized coefficients (NC) are found via the product of each β value (β_i, β_{ii}, β_{ij} from Equation 1) and the primary sensitivity constant for each associated component bridge, as shown in equation 39. The effect percent of full-scale calculates the relative contribution of each coefficient to the overall component bridge output and is shown in Equation 40. The equation is the product of NC times the ratio of the coefficients active forces and/or moments at full-scale to the full-scale load of the component bridge. As an example, if applying the equation to calculate the NF^2 contribution to AF then $x_F^2 = NF^2$ and the FSL corresponds to the AF component bridge full-scale load. In this normalized form, NC=1 and the effect percent of full-scale is 100% for each component bridges' primary sensitivity. Effect percent of full-scale is equivalent to what is referred to as percent contribution in other works (Ref. 4, 5).

$$NC = (\beta_i, \beta_{ii}, or\ \beta_{ij})(SC) \tag{39}$$

$$Effect\ \%\ of\ Full\ Scale(x_F, x_F^2, x_M, x_M^2, or\ x_F \times x_M) = (100)(NC)\frac{(x_F, x_F^2, x_M, x_M^2, or\ x_F \times x_M)}{FSL} \tag{40}$$

While all interactions are estimated for each component, it is often the case that several coefficients can be considered insignificant in their effect on balance performance during use.

7.2 Determination of Balance Accuracy

All equations thus far have been presented in what is referred to as the forward model where the applied loads are represented as the known independent variables and the balance outputs have been presented as the dependent variables. All the matrix coefficients are determined using the forward model. However, wind-tunnels estimate model loads based on measured balance electrical outputs. This involves an iterative process due to the nonlinear nature of the matrix. This process is outlined in more detail in other works (Ref. 4, 9). This inverse process estimates the calibration loads based on the measured signals from the balance and the calibration coefficient estimates. The estimates of the calibrated loads are compared to the actual applied loads during calibration to evaluate the error. The 2-sigma balance accuracy accounts for two times the root-mean-square load estimation error expressed as a percentage of full-scale.

8 Extensions of the Coefficient Estimation Methodology

8.1 Partitioned Regression Using All Data

In this TM, the estimation methodology is presented using a single data point (maximum load, end-point) from each calibration loading sequence deliberately for instructive purposes to illustrate the conceptual approach. The end-point only approach was the original implementation at Langley Research Center, and it was used until the 1990s. It can be thought of as assuming a 3-point load sequence of all runs, with a zero-load, max-load (100%), and a return zero-load. However, typically LaRC calibrations are performed with 50% incremented load points, known as 5-point, or 25% incremented load points, known as 9-point. In the late 1990's, the methodology presented here was extended to regression modeling that utilizes all of the load points rather than only the max load point. There are statistical estimation advantages to utilizing all of the data available.

To apply regression modeling, the load sequence groupings previously described and subtraction of load sequences remain valid. However, now we consider the data points within a loading sequence as a vector rather than a single value. To illustrate, consider the following data from codes 20 and 50 used to estimate NF and NF^2 from a 5-point loading sequence and we illustrate for AF output only (Table 5).

Using the end-point formulation previously described:

Code	NF Load	AF Output	AF out -1/2 zero shift
20	0	0	-7
21	50	221	214
22	100	706	699
23	50	219	212
24	0	14	7
50	0	0	2
51	-50	9	11
52	-100	290	292
53	-50	18	21
54	0	-5	-2

Table 5.—Partitioned Regression Example

$$\beta_N = \frac{\theta_{20} - \theta_{50}}{2(x_N)} = \frac{699 - 292}{2(100)} = 2.035 \frac{\mu\text{V/V of AF}}{\text{lb of NF}}$$

$$\beta_{N^2} = \frac{\theta_{20} + \theta_{50}}{2(x_N)^2} = \frac{699 + 292}{2(100^2)} = 0.04955 \frac{\mu\text{V/V of AF}}{\text{lb of } NF^2}$$

To use all of the points in the run, we perform least-squares regression of the AF output (column with half the zero shift removed) as a function of the NF load. The regression model is:

$$\theta_A = \beta_N(x_N) + \beta_{N^2}(x_N)^2 + \epsilon$$

Note the intercept is not estimated, i.e., it is forced to zero, since half the zero-shift has been removed algebraically from the output. The estimated regression coefficients are NF = 2.0133 (μV/V of AF)/(lb of NF), and NF^2 = 0.0491 (μV/V of AF)/(lb of NF^2). As expected, the coefficients estimates are numerically different than the end-point estimates since they are based on all points in the run, but they are not appreciably different in this example.

To conceptually link the end-point to regression methods, the end-point methodology presented in the main body is essentially regression modeling of a 3-point calibration (without the error term), even though it was not described explicitly in that way. Performing regression modeling described on a subset of the sample data above by extracting the zero, full, and return zero points (codes 20, 22, 24, 50, 52, 54), i.e., making them 3-point runs, produces the same coefficients as the end-point method.

When using regression to estimate a two-factor interaction, a linear fit is used. As an example, consider estimating NFxPM using a regression approach. In this example, the linear regression model is:

$$\theta = \beta_{Nm}(x_N)(x_m) + \epsilon$$

The outputs of the set of four pure PM loadings (30, 1030, 60, and 1060) are pair-wise subtracted from the four two-factor NFxPM loadings (220, 1220, 260, and 1260) in the pairs shown previously. The applied load column (explanatory variable) in this regression is the product of NFxPM. Note that the auxiliary NF load from the pure PM runs is subtracted from full NF load in the NFxPM runs to obtain the correct NFxPM coefficient.

For the regression approach, the sets of runs previously identified for estimating each coefficient remain the same as the end-point method. Groups of runs are used to estimate specific coefficients, which is known as partitioned regression. Alternatively, all of the runs could be used to estimate the full second-order model for each output channel in a single regression model simultaneously. This is known as global regression (Ref. 4). Both partitioned and global regression are utilized at LaRC, and a full discussion of their advantages and disadvantages is beyond the scope of this TM.

The non-iterative preload corrections due to tare load can be applied to regression-based coefficients in the same manner as previously described in Section 6.1.

8.2 General Application of Coefficient Estimation

The estimation method described in this TM is generally applicable for other calibration loading designs, for example, short-arm calibration. In a short-arm calibration, the full force is applied at a relatively short distance from the BMC to generate the moment, and thus the nomenclature of "short-arm." This is in contrast to long-arm where a small auxiliary force (weight) is transferred a long distance from the balance moment center (BMC) to generate a moment. Conceptually the estimation approach is the same, however the algebraic formulation of a short-arm loading sequence is different than long-arm.

As an example, consider a balance with maximum calibration loads of 100 lbs of NF and 200 in-lbs of PM. The calibration fixture provides 3 load points along the x-axis with one point at BMC and 2 points forward and aft of BMC at PM/NF = 200/100 = +/- 2 inches, which is a relatively short distance. These 3 locations are loaded in both positive and negative NF direction (upright and inverted), resulting in 6 total runs. These 6 runs can be used to estimate NF, NF^2, PM, PM^2, and NFxPM. Table 6 is an example of short-arm loading codes for these 6 runs. Using a long-arm calibration, 2 pure NF, 4 pure PM runs, and 4 NFxPM runs would be used to estimate the same 5 coefficients.

The algebraic expressions and application of the estimation methodology for this short-arm loading design is developed below. Equations for θ_{70020} and θ_{70050} are as follows:

$$\theta_{70020} = \beta_N(+x_N) + \beta_{N^2}(+x_N)^2$$
$$\theta_{70050} = \beta_N(-x_N) + \beta_{N^2}(+x_N)^2$$

To estimate the NF and NF^2 coefficients:

$$\beta_N = \frac{\theta_{70020} - \theta_{70050}}{2(x_N)}$$
$$\beta_{N^2} = \frac{\theta_{70020} + \theta_{70050}}{2(x_N)^2}$$

Equations for θ_{70030}, θ_{71030}, θ_{70060}, θ_{71060} are as follows:

$$\theta_{70030} = \beta_N(+x_N) + \beta_{N^2}(+x_N)^2 + \beta_m(+x_m) + \beta_{m^2}(+x_m)^2 + \beta_{Nm}(+x_N)(+x_m)$$
$$\theta_{71030} = \beta_N(+x_N) + \beta_{N^2}(+x_N)^2 + \beta_m(-x_m) + \beta_{m^2}(+x_m)^2 + \beta_{Nm}(+x_N)(-x_m)$$
$$\theta_{70060} = \beta_N(-x_N) + \beta_{N^2}(+x_N)^2 + \beta_m(+x_m) + \beta_{m^2}(+x_m)^2 + \beta_{Nm}(-x_N)(+x_m)$$
$$\theta_{71060} = \beta_N(-x_N) + \beta_{N^2}(+x_N)^2 + \beta_m(-x_m) + \beta_{m^2}(+x_m)^2 + \beta_{Nm}(-x_N)(-x_m)$$

To remove the effect of NF and NF^2, we subtract runs as follows:

Code	Components Applied	Balance Orientation
70020	+NF	Weight applied at x=y=0
70050	-NF	Weight applied at x=y=0
70030	+NF and +PM	Weight applied at x=+2, y=0
71030	+NF and -PM	Weight applied at x=-2, y=0
70060	-NF and +PM	Weight applied at x=-2, y=0
71060	-NF and -PM	Weight applied at x=+2, y=0

Table 6.—Short-arm calibration example

$$\theta_{70030}–\theta_{70020} = \beta_m(+x_m) + \beta_{m^2}(+x_m)^2 + \beta_{Nm}(+x_N)(+x_m)$$

$$\theta_{71030}–\theta_{70020} = \beta_m(-x_m) + \beta_{m^2}(+x_m)^2 + \beta_{Nm}(+x_N)(-x_m)$$

$$\theta_{70060}–\theta_{70050} = \beta_m(+x_m) + \beta_{m^2}(+x_m)^2 + \beta_{Nm}(-x_N)(+x_m)$$

$$\theta_{71060}–\theta_{70050} = \beta_m(-x_m) + \beta_{m^2}(+x_m)^2 + \beta_{Nm}(-x_N)(-x_m)$$

To solve for PM, PM^2, and NFxPM:

$$\beta_m = \frac{(\theta_{70030}–\theta_{70020})–(\theta_{71030}–\theta_{70020}) + (\theta_{70060}–\theta_{70050})–(\theta_{71060}–\theta_{70050})}{4(x_P)}$$

$$\beta_{m^2} = \frac{(\theta_{70030} - \theta_{70020}) + (\theta_{71030} - \theta_{70020}) + (\theta_{70060}–\theta_{70050}) + (\theta_{71060}–\theta_{70050})}{4(x_{P^2})}$$

$$\beta_{Nm} = \frac{(\theta_{70030}–\theta_{70020})–(\theta_{71030}–\theta_{70020}) + (\theta_{71060}–\theta_{70050}) - (\theta_{70060}–\theta_{70050})}{4(x_P)(x_N)}$$

9 Summary

The theory and methods presented in this document serve as a knowledge capture for established balance calibration data analysis procedures at LaRC. The TM focuses on the application of a partitioned approach for the estimation of all coefficients of a second order math model. The TM primarily highlights loadings associated with long-arm calibration, but the use of this partitioned approach is not limited to long-arm calibration. The established process for non-iterative tare correction is outlined. Moreover, the implementation of a partitioned regression approach that uses all data points and not just end points is also covered in this TM since it is currently used for coefficient estimation.

Appendix A Example Load Schedule

NASA LaRC - Strain Gage Balance Load Schedule

Balance: Sample Observer:_____ Date:_____

POINT NO.	VAR	PRIM LOAD	AUX LOAD	CONDITIONS	NO. LOADS
0010	+AF	50 lb axial		50 lb at Y&Z=0 25.000 lb incr	1
1010	-AF	50 lb axial		50 lb at Y&Z=0 25.000 lb incr	1
0020	+NF	100 lb normal		100 lb at X&Y=0 50.000 lb incr	1
0030	+PM	200 in-lb	10 lb	10 lb at X&Y=0 trans 10.00 lb to +x = 20.000 in 5.000 lb incr	
1030	-PM	pitch	+NF	10 lb at X&Y=0 trans 10.00 lb to -x = 20.000 in 5.000 lb incr	2
1040	-RM	150 in-lb	10 lb	10 lb at X&Y=0 trans 10.00 lb to +y = 15.000 in 5.000 lb incr	
0040	+RM	roll	+NF	10 lb at X&Y=0 trans 10.00 lb to -y = 15.000 in 5.000 lb incr	2
0050	-NF	100 lb normal		100 lb at X&Y=0 50.000 lb incr	1
1060	-PM	200 in-lb	10 lb	10 lb at X&Y=0 trans 10.00 lb to +x = 20.000 in 5.000 lb incr	
0060	+PM	pitch	-NF	10 lb at X&Y=0 trans 10.00 lb to -x = 20.000 in 5.000 lb incr	2
0070	+RM	150 in-lb	10 lb	10 lb at X&Y=0 trans 10.00 lb to +y = 15.000 in 5.000 lb incr	
1070	-RM	roll	-NF	10 lb at X&Y=0 trans 10.00 lb to -y = 15.000 in 5.000 lb incr	2
0080	+SF	50 lb side		50 lb at X&Z=0 25.000 lb incr	1
0090	+YM	100 in-lb	10 lb	10 lb at X&Z=0 trans 10.00 lb to +x = 10.000 in 5.000 lb incr	
1090	-YM	yaw	+SF	10 lb at X&Z=0 trans 10.00 lb to -x = 10.000 in 5.000 lb incr	2
0100	-SF	50 lb side		50 lb at X&Z=0 25.000 lb incr	1
1110	-YM	100 in-lb	10 lb	10 lb at X&Z=0 trans 10.00 lb to +x = 10.000 in 5.000 lb incr	
0110	+YM	yaw	-SF	10 lb at X&Z=0 trans 10.00 lb to -x = 10.000 in 5.000 lb incr	2
0120	+RM	150 in-lb	10 lb	10.00 lb to +z = 15.000 in 5.000 lb incr	
1120	-RM	roll	-SF	10 lb at X&Z=0 trans 10.00 lb to -z = 15.000 in 5.000 lb incr	2

NASA LaRC - Strain Gage Balance Load Schedule

Balance: Sample Observer:_____ Date:_____

POINT NO.	VAR	PRIM LOAD	AUX LOAD	CONDITIONS				NO. LOADS
0130 1130	+RM -RM	150 in-lb roll	50 lb -SF	50 lb at X&Z=0	trans	10.00 lb to +z = 15.000 in 10.00 lb to -z = 15.000 in	5.000 lb incr 5.000 lb incr	2
1140 0140	-YM +YM	100 in-lb yaw	20 lb -SF 150 in-lb +RM	10 lb at X&Z=0 10 lb +z = 15 in	trans	10.00 lb to +x = 10.000 in 10.00 lb to -x = 10.000 in	5.000 lb incr 5.000 lb incr	2
1150 0150	-YM +YM	100 in-lb yaw	20 lb -SF 150 in-lb -RM	10 lb at X&Z=0 10 lb -z = 15 in	trans	10.00 lb to +x = 10.000 in 10.00 lb to -x = 10.000 in	5.000 lb incr 5.000 lb incr	2
1160 0160	-YM +YM	100 in-lb yaw	50 lb -SF	50 lb at X&Z=0	trans	10.00 lb to +x = 10.000 in 10.00 lb to -x = 10.000 in	5.000 lb incr 5.000 lb incr	2
0170 1170	+YM -YM	100 in-lb yaw	50 lb +SF	50 lb at X&Z=0	trans	10.00 lb to +x = 10.000 in 10.00 lb to -x = 10.000 in	5.000 lb incr 5.000 lb incr	2
1180 0180	-RM +RM	150 in-lb roll	10 lb +SF	10 lb at X&Z=0	trans	10.00 lb to +z = 15.000 in 10.00 lb to -z = 15.000 in	5.000 lb incr 5.000 lb incr	2
1190 0190	-RM +RM	150 in-lb roll	50 lb +SF	50 lb at X&Z=0	trans	10.00 lb to +z = 15.000 in 10.00 lb to -z = 15.000 in	5.000 lb incr 5.000 lb incr	2
0200 1200	+YM -YM	100 in-lb yaw	20 lb +SF 150 in-lb +RM	10 lb at X&Z=0 10 lb -z = 15 in	trans	10.00 lb to +x = 10.000 in 10.00 lb to -x = 10.000 in	5.000 lb incr 5.000 lb incr	2
0210 1210	+YM -YM	100 in-lb yaw	20 lb +SF 150 in-lb -RM	10 lb at X&Z=0 10 lb +z = 15 in	trans	10.00 lb to +x = 10.000 in 10.00 lb to -x = 10.000 in	5.000 lb incr 5.000 lb incr	2
0220 1220	+PM -PM	200 in-lb pitch	100 lb +NF	100 lb at X&Y=0	trans	10.00 lb to +x = 20.000 in 10.00 lb to -x = 20.000 in	5.000 lb incr 5.000 lb incr	2
1230 0230	-RM +RM	150 in-lb roll	100 lb +NF	100 lb at X&Y=0	trans	10.00 lb to +y = 15.000 in 10.00 lb to -y = 15.000 in	5.000 lb incr 5.000 lb incr	2
0240 1240	+PM -PM	200 in-lb pitch	20 lb +NF 150 in-lb +RM	10 lb at X&Y=0 10 lb -y = 15 in	trans	10.00 lb to +x = 20.000 in 10.00 lb to -x = 20.000 in	5.000 lb incr 5.000 lb incr	2
0250 1250	+PM -PM	200 in-lb pitch	20 lb +NF 150 in-lb -RM	10 lb at X&Y=0 10 lb +y = 15 in	trans	10.00 lb to +x = 20.000 in 10.00 lb to -x = 20.000 in	5.000 lb incr 5.000 lb incr	2
1260 0260	-PM +PM	200 in-lb pitch	100 lb -NF	100 lb at X&Y=0	trans	10.00 lb to +x = 20.000 in 10.00 lb to -x = 20.000 in	5.000 lb incr 5.000 lb incr	2

NASA LaRC - Strain Gage Balance Load Schedule

Balance: Sample Observer:_____ Date:_____

POINT NO.	VAR	PRIM LOAD	AUX LOAD	CONDITIONS				NO. LOADS
0270 1270	+RM -RM	150 in-lb roll	100 lb -NF	100 lb at X&Y=0	trans	10.00 lb to +y = 15.000 in 10.00 lb to -y = 15.000 in	5.000 lb incr 5.000 lb incr	2
1280 0280	-PM +PM	200 in-lb pitch	20 lb -NF 150 in-lb +RM	10 lb at X&Y=0 10 lb +y = 15 in	trans	10.00 lb to +x = 20.000 in 10.00 lb to -x = 20.000 in	5.000 lb incr 5.000 lb incr	2
1290 0290	-PM +PM	200 in-lb pitch	20 lb -NF 150 in-lb -RM	10 lb at X&Y=0 10 lb -y = 15 in	trans	10.00 lb to +x = 20.000 in 10.00 lb to -x = 20.000 in	5.000 lb incr 5.000 lb incr	2
1300 0300	-PM +PM	200 in-lb pitch	10 lb -NF 50 lb +AF	10 lb at X&Y=0 50 lb at Y&Z=0	trans	10.00 lb to +x = 20.000 in 10.00 lb to -x = 20.000 in	5.000 lb incr 5.000 lb incr	2
0310 1310	+RM -RM	150 in-lb roll	10 lb -NF 50 lb +AF	10 lb at X&Y=0 50 lb at Y&Z=0	trans	10.00 lb to +y = 15.000 in 10.00 lb to -y = 15.000 in	5.000 lb incr 5.000 lb incr	2
0320	-NF	100 lb normal	50 lb +AF	100 lb at X&Y=0 50 lb at Y&Z=0			50.000 lb incr	1
0330	+NF	100 lb normal	50 lb +AF	100 lb at X&Y=0 50 lb at Y&Z=0			50.000 lb incr	1
0340 1340	+PM -PM	200 in-lb pitch	10 lb +NF 50 lb +AF	10 lb at X&Y=0 50 lb at Y&Z=0	trans	10.00 lb to +x = 20.000 in 10.00 lb to -x = 20.000 in	5.000 lb incr 5.000 lb incr	2
1350 0350	-RM +RM	150 in-lb roll	10 lb +NF 50 lb +AF	10 lb at X&Y=0 50 lb at Y&Z=0	trans	10.00 lb to +y = 15.000 in 10.00 lb to -y = 15.000 in	5.000 lb incr 5.000 lb incr	2
0360	+SF	50 lb side	50 lb +AF	50 lb at X&Z=0 50 lb at Y&Z=0			25.000 lb incr	1
0370 1370	+YM -YM	100 in-lb yaw	10 lb +SF 50 lb +AF	10 lb at X&Z=0 50 lb at Y&Z=0	trans	10.00 lb to +x = 10.000 in 10.00 lb to -x = 10.000 in	5.000 lb incr 5.000 lb incr	2
1380 0380	-YM +YM	100 in-lb yaw	10 lb -SF 50 lb +AF	10 lb at X&Z=0 50 lb at Y&Z=0	trans	10.00 lb to +x = 10.000 in 10.00 lb to -x = 10.000 in	5.000 lb incr 5.000 lb incr	2
0390	-SF	50 lb side	50 lb +AF	50 lb at X&Z=0 50 lb at Y&Z=0			25.000 lb incr	1
0400	+NF	100 lb normal	50 lb +SF	100 lb at X&Y=0 50 lb at X&Z=0			50.000 lb incr	1

NASA LaRC - Strain Gage Balance Load Schedule

Balance: Sample Observer:_____ Date:_____

POINT NO.	VAR	PRIM LOAD	AUX LOAD	CONDITIONS			NO. LOADS
0420	+NF	100 lb normal	50 lb +SF 100 in-lb +YM	100 lb at X&Y=0 50 lb +x = 2 in, z=0	trans	50.000 lb incr	1
0430 1430	+PM -PM	200 in-lb pitch	10 lb +NF 50 lb +SF	10 lb at X&Y=0 50 lb at X&Z=0	trans	10.00 lb to +x = 20.000 in 5.000 lb incr 10.00 lb to -x = 20.000 in 5.000 lb incr	2
0440 1440	+PM -PM	200 in-lb pitch	10 lb +NF 50 lb +SF 100 in-lb +YM	10 lb at X&Y=0 50 lb +x = 2 in, z=0	trans	10.00 lb to +x = 20.000 in 5.000 lb incr 10.00 lb to -x = 20.000 in 5.000 lb incr	2
0460	-NF	100 lb normal	50 lb +SF	100 lb at X&Y=0 50 lb at X&Z=0		50.000 lb incr	1
0470	-NF	100 lb normal	50 lb +SF 100 in-lb +YM	100 lb at X&Y=0 50 lb +x = 2 in, z=0	trans	50.000 lb incr	1
1490 0490	-PM +PM	200 in-lb pitch	10 lb -NF 50 lb +SF	10 lb at X&Y=0 50 lb at X&Z=0	trans	10.00 lb to +x = 20.000 in 5.000 lb incr 10.00 lb to -x = 20.000 in 5.000 lb incr	2
1510 0510	-PM +PM	200 in-lb pitch	10 lb -NF 50 lb +SF 100 in-lb +YM	10 lb at X&Y=0 50 lb +x = 2 in, z=0	trans	10.00 lb to +x = 20.000 in 5.000 lb incr 10.00 lb to -x = 20.000 in 5.000 lb incr	2

TOTAL NUMBER OF LOADS = 82

Appendix B Calculation Examples

The examples in this appendix illustrate the estimation of matrix coefficients using the end-point methodologies discussed above.

B.1 Calculation of Primary Sensitivity Values

Code	NF 1000 lb.	$\Delta\theta_0$	AF 500 lb.	$\Delta\theta_0$	PM 15000 in-lb.	$\Delta\theta_0$	RM 3452 in-lb.	$\Delta\theta_0$	YM 7000 in-lb	$\Delta\theta_0$	SF 500 lb.	$\Delta\theta_0$
20	882.57	-0.04	17.58	-0.1	1.04	0.03	0.86	-0.13	-1.09	0.08	2.05	0.03
50	-883.07	-0.1	-23.77	-0.09	-0.99	-0.09	-0.7	-0.09	1.2	0.05	-1.68	0.03

Table E1.—Outputs and zero-shifts for all six bridges during loading of pure normal force

NF runs 20 and 50 are shown in table E1. To calculate the value of β_N, first half of the zero shift is removed from the delta data for codes 20 and 50:

$$\Delta\theta^*_{20} = \frac{(882.57 + (882.57 - (-0.04))}{2} = 882.59\ \mu V/V$$

$$\Delta\theta^*_{50} = \frac{(-883.07 + (-883.07 - (-0.1))}{2} = -883.02\ \mu V/V$$

Solving for β_N:

$$\beta_N = \frac{882.59\mu V/V - (-883.02\mu V/V)}{2(1000\ lb)} = 0.882805\ (\mu V/V)/lb$$

The β_N coefficient is the primary sensitivity for the NF channel. The NF channel's sensitivity constant, SC, is therefore:

$$SC = \frac{1}{\beta_N} = \frac{1}{0.882805}\frac{lb}{(\mu V/V)} = 1.132753\frac{lb}{(\mu V/V)} = 1132.753\frac{lb}{(mV/V)}$$

And the full-scale output (FSO) for the channel is:

$$FSO = \frac{1000\ lb}{1132.753\ lb/(mV/V)} = 0.883\ mV/V$$

B.2 Calculation of Normalized and Effect % for a Second Order Coefficient

The β_{N^2} coefficient for the NF channel is:

$$\beta_{N^2} = \frac{882.59 + -883.02}{2(1000\ lb)^2} = -2.15E-07\ (\mu V/V)/lb^2$$

The normalized coefficient (NC) for the NF^2 term is:

$$NC = -2.15E-07\ \frac{\mu V}{V \times lb^2} \times \frac{1mV}{1000\mu V} \times 1132.753\ \frac{V \times lb}{mV} = -2.435E-07\frac{lb}{lb^2}$$

Expressing this coefficient as a percentage of full-scale effect we get the following:

$$Effect\ \%\ of\ Full\ Scale = 100 \times -2.435E-07 \frac{lb}{lb^2} \times \frac{1000^2}{1000} \frac{lb^2}{lb} = 0.024\%$$

B.3 Calculation of Normalized and Effect % for a NF Interaction

To demonstrate the effect of interaction coefficients on a different component, the output from the AF bridge from runs 20 and 50 in table E1 provides a pertinent example. Once again the zero shift is first removed from runs 20 and 50:

$$\Delta\theta^*_{20} = \frac{(17.58 + (17.58 - (-0.1))}{2} = 17.63\ \mu V/V$$

$$\Delta\theta^*_{50} = \frac{(-23.77 + (-23.77 - (-0.09))}{2} = -23.725\ \mu V/V$$

To solve for β_N:

$$\beta_N = \frac{17.63\mu V/V - (-23.725\mu V/V)}{2(1000\ lb)} = 0.0206775(\mu V/V)/lb$$

To find the NF normalized coefficient for the AF bridge, β_N is multiplied by the scaled AF bridge sensitivity constant (458 lb/(mV/V) in this example) as shown below:

$$NC = 0.0206775\ \frac{\mu V}{V \times lb} \times \frac{1mV}{1000\mu V} \times 458\ \frac{V \times lb}{mV} = 9.47E-3 \frac{lb}{lb}$$

The effect expressed as a percent of full-scale is therefore:

$$Effect\ \%\ of\ Full\ Scale = 100 \times 9.47E-3 \frac{lb}{lb} \times \frac{1000}{500} \frac{lb}{lb} = 1.89\%$$

References

1. Hansen, R. M.: Evaluation and Calibration of Wire-Strain-Gage Wind Tunnel Balances Under Load. , Advisory Group for Aeronautical Research and Development, Feb. 1956.

2. Guarino, J.: Calibration and Evaluation of Multicomponent Strain-Gage Balances. , Jet Propulsion Laboratory, Apr. 1964. NASA Interlaboratory Force Measurements Group Meeting.

3. Ferris, A. T.: Strain Gauge Balance Calibration and Data Reduction at NASA Langley Research Center. *First International Symposium on Strain Gauge Balances*, 1999. URL `https://ntrs.nasa.gov/citations/19990072775`.

4. Recommended Practice: Calibration and Use of Internal Strain-Gage Balances with Application to Wind Tunnel Testing. R-091A-2020, AIAA, 2020.

5. Ulbrich, N.: Evaluation, Analysis, and Application of Internal Strain-Gage Balance Data. NASA/CR-20250002267, National Aeronautics and Space Administration, 2025.

6. Rhew, R. D.; and Parker, P. A.: Wind Tunnel Balance Calibration: Are 1,000,000 Data Points Enough? NASA Langley Research Center, Hampton, VA 23681, 2016. URL `https://ntrs.nasa.gov/citations/20160009122`.

7. Curry, T. M.: The Treatment of Initial Loading Effects on Calibration and Testing Data of Typical Wire Strain-Gage Balances. , National Advisory Council for Aeronautics, Langley Field, VA, 1954.

8. Tindall, W. H.: Initial Load Effects. , National Advisory Council for Aeronautics, Langley Field, VA, 1955.

9. Smith, D. L.: An Efficient Algorithm Using Matrix Methods to Solve Wind-Tunnel Force-Balance Equations. NASA TN D-6860, National Aeronautics and Space Administration, 1972.