https://ntrs.nasa.gov/search.jsp?R=19620001704 2018-07-24T17:43:03+00:00Z

N62-11704

Subject: Erratum for Quarterly Status Report No. 2, January 1962 Research on Vibration in Complicated Structures by Energy Methods

Reference: Contract No. NASr-47
BBN Job No. 110772

Page 2: 4th line from bottom; for "single pattern," read "single panel"

" 3: Equation (2); for "S_p" read "A_p"

" 5: lines 2 and 4; for "S_p" read "A_p"

" 7: line 8; for "$\omega \approx \kappa c_g$ ...", read "$\omega \approx \pi^2 \kappa c_g$..."

line 9; for "200" read "2×10^{-1}"

line 15; for "2.5×10", read 2.5×10^8

" "; for 4.4×10^5, read 4.4×10^2

" 8: Equation (12); read "$\sigma_{rms} = 2 \times 10^2$ psi"

line 3; read "$\sigma'_{rms} = 1.5 \times 10^2$ psi"

lines 13, 14; for "and its result which is" read "but its result is not"

last sentence; add "and a consistent estimate of stress achieved by our procedures."

The Response of Ribbed Panels to Reverberant Acoustic Fields

by

Gideon Maidanik

Bolt Beranek and Newman Inc., Cambridge 38, Massachusetts

ABSTRACT

A statistical method for estimating the response of ribbed panels to acoustic excitation is discussed. It is shown that the acceleration spectrum of the vibrational field is related to the pressure spectrum by a coupling factor which is a simple function of the radiation and mechanical resistance of the structure. The radiation resistance of a ribbed panel is studied as a function of frequency. The analysis predicts that ribbing increases the radiation resistance of the panel and hence its coupling to the acoustic field. The effect of various panel-rib boundary conditions is also considered. The results of experiments which were conducted to test the theory are reported. The agreement between theory and experiments is shown to be satisfactory.

Due to its length, the body of the paper is not included in this report. Those interested in the theoretical and experimental details are encouraged to request preprints from G. Maidanik at Bolt Beranek and Newman Inc.

Bolt Beranek and Newman Inc.
30 January 1962

Subject: Quarterly Status Report No. 2, January 1962
Research on Vibration in Complicated Structures
by Energy Methods

Reference: Contract No. NASr-47
BBN Job No. 110772

Review of Activities During the Quarter

The last quarter has seen an accelerated activity on this contract, primarily by M. Heckl, R. Lyon, and G. Maidanik, with the experimental assistance of C. Malme and the computational assistance of R. McQuillin and G. Carey. A number of theoretical and experimental studies on the radiation resistance of ribbed panels and the modal frequencies of cylinders have been completed during the quarter and other studies are near completion. We report on one completed effort in this report in the form of a topical study. The topical study is in preprint format suitable for submission to a technical journal.

Experiments on the radiation resistance of the ribbed panel previously described by Maidanik[1] have been carried out by Maidanik and Malme for panel damping, radiation resistance, and the effect of baffling. In addition, as Maidanik reports in his study, it has been possible to explain some results of other workers. Studies of panel radiation by Westphal[2] and the radiation of a small metal box by Coles and Noiseux[3] have been analyzed. In both instances, the formulas developed for radiation resistance under this contract have shown good agreement with our own experiments and the results of these other experimenters.

During the next month, we expect to prepare and submit a final report on this contract which will include two topical studies in preprint form. One of these is a theoretical and experimental study of the modal density and input impedance of cylinders by M. Heckl. The other is a study of the radiation resistance of beam plate systems by R. H. Lyon. Expenditures to date have reached approximately 90% of the contract funds. A proposal for extension of this work was submitted to NASA on 17 January 1962.

Discussion of the Stress Estimation Scheme of Y. K. Lin

Quite recently, Y. K. Lin has published an account of stress estimation in skin-stiffener panels under random loading.[4] Since he is attacking this problem in much the same spirit as we have approached our work, it is perhaps useful to summarize his approach, assumptions, and results and then see whether our methods would lead to similar or different results. In doing so we are able to discuss some points which indicate some of the uncertainties in present experimental work and how these may be reduced.

Lin discusses the response of a panel of dimensions BxL as shown in Fig. 1 made up of NP subpanels. He is particularly interested in the stress response due to the lowest modes of the structure which are made up of combinations of the lowest mode of a subpanel. There are NP of these modes and if the subpanels were completely isolated, a modal pattern of the composite system would be an NP-fold degenerate modal pattern for a single pattern. For real structures this degeneracy spreads out over a frequency range from roughly clamped edge to supported edge conditions for the subpanel as shown in Fig. 2.

Lin finds that the first band runs from 99 to 148 cps. If we look at the tables of MacDuff and Felgar,[5] for an aspect ratio ℓ/b of 1.5, the ratio

$$\frac{\omega_u - \omega_\ell}{\omega_\ell} = 0.89 \tag{1}$$

instead of a value = 0.57 as indicated by Lin. If one assumes the diagram of Fig. 2 is exact (which it is not) then this ratio is 1.25.

Let us compare the modal density in this lowest band discussed by Lin with that which we have presented in our previous work[6]

$$n(\omega) = \frac{S_p \sqrt{3}}{2\pi\, c_\ell h} = 1.35 \times 10^{-6} \frac{A_p}{h} \tag{2}$$

where dimensions are in inches, A_p is the panel area and h is its thickness. The lowest frequency band density for an aspect ratio of 1.5 is[5]

$$n'(\omega) = 1.28 \times 10^{-6} \frac{A_p}{h} \tag{3}$$

If we use the bandwidth of the first band which Lin computes, this is

$$n''(\omega) = 2.0 \times 10^{-6} \frac{A_p}{h} . \tag{4}$$

We see that neither of these is greatly different from that which we have been using which does not consider any "band forming" tendency. This may explain why our experiments on modal density have not revealed any strong tendency for modal clumping, although

there has been some slight tendency for a small hump in the $N(\omega)$ curve at low frequencies.

Lin then assumes a value of $\eta = .04$ for the loss factor without stating his source for this value. He asserts that this is sufficient to cause modal overlap to an extent that requires one to consider modal covariance in computing the stress response. It is correct to consider modes independently in determining the energy in a structure whether they are correlated or not. This is not the case when considering a dynamical response at some point; the presence of coherence means that the sum of rms response in the modes is not the total rms response. Whether modal overlap occurs depends on two factors; the number of modes in the band, and the choice of the correct damping ratio. We shall consider these separately.

The loss factor $\eta = 0.04$ may have been taken from Clarkson and Ford[7] who report this value for a section of Caravelle fuselage. Their measurement is of the envelope of the autocorrelation of the strain response. The point to be made here is that the "damping" is not necessarily related to this number. Our study of the damping in this frequency range of riveted panels typical of aircraft construction has resulted in loss factors of an order of magnitude below this value.[8] The higher value reported by Clarkson and Ford probably arises from transmission of energy from the excited part of the structure to more remote sections rather than local dissipation. It is not correct to interpret this as "damping" unless the other parts of the structure are not excited and drain energy away. The point to be made is that the autocorrelation of response only gives the damping correctly for a single mode. When a group of modes is present, the autocorrelation envelope is not determined by the damping alone.

The second uncertainty is the number of modes to be included, i.e., for a real structure, is S_p the total area of the aircraft, or the correlation area of the sound field, or what? Lin's answer appears to be that S_p is equal to the correlation area of the sound field, which is consistent with his notion that modes which have common frequency components are coherent. If we take 2/3 ft.^{2} as the panel area and 67 ft.^{2} as the correlation area at 120 cps, then one has $NP \approx 100$. The average frequency separation is then about 1/2 cps (taking Lin's value for the bandwidth) whereas the modal bandwidth would be 4 cps using his value of damping. Using the lower value of $\eta \approx 5 \times 10^{-3}$ for dissipation damping, then the modal bandwidth is 1/2 cps. The assumed damping makes considerable difference then in terms of modal overlap depending on the value of loss factor one believes.

Lin proceeds to make an estimate of stress by using Powell's modal acceptance relations. There is of course no difference between our approach and that of Powell except we have concentrated on the energy of vibration and have put our description of the coupling in terms of radiation resistance and internal damping. In estimating dynamical response, we have ignored coherence between the modes, although some adjustment of our results is possible if coherence is important.

There are some apparent inconsistencies in Lin's approach which warrant discussion. He assumes a fair amount of modal overlap, which normally takes one into a mass law or quasi-mass law behavior. At the same time he shows experimental response curves which are quite jagged in their appearance in a manner reminiscent of resonant response. He also assumes the response is limited to modes in a bandwidth $\eta\omega$ when he is just above and below the band limits (resonant response) but speaks of the acceleration

or displacement being in phase with the force. This implies mass or stiffness controlled behavior. He gives an argument for a drop off in response when the excitation frequency is in the band which does not make sense either from a resonant response or mass law behavior.

At this point then, we want to estimate the mean square stress measured by Lin applying the methods which have been developed under NASA sponsorship. Our fundamental relation is

$$\frac{\rho_s^2 \, S_a(\omega)}{S_p(\omega)} = \frac{2\pi^2 c_f \rho_p h n(\omega)}{\rho_f A_p} \cdot \mu(\omega) \tag{5}$$

where ρ_s is the surface mass density. If we use the relation between strain (or stress) and velocity for a thin plate developed by Hunt,[9] the ratio of stress spectrum to pressure spectrum (dimensionless) is given by

$$\frac{S_s(\omega)}{S_p(\omega)} = 2 \left(\frac{c_\ell}{\omega h}\right)^2 \cdot \frac{2\pi^2 c_f \rho_p h n(\omega)}{\rho_f A_p} \cdot \mu(\omega) \tag{6}$$

For our estimate of $\mu(\omega)$, we regard the subpanel vibrations as incoherent (for N modes, the coherence between panels measured for this band will be of the order of $1/\sqrt{N}$). The lowest mode of a supported panel has a radiation resistance in terms of its energy velocity (that velocity which when squared and multiplied by the mass of the panel gives its total energy) given by

$$R_{rad} = \frac{32}{3\pi} \frac{c_\ell^2}{c_f^2} \rho_f c_f h^2 \quad . \tag{7}$$

The mechanical resistance is by definition

$$R_{mech} = \eta\omega\rho_p h A_p \tag{8}$$

The ratio is then

$$\frac{R_{rad}}{R_{mech}} = \frac{32}{3\pi}\frac{c_\ell}{c_f}\frac{\rho_f}{\rho_p}\frac{h^2}{A_p}\left(\frac{c_\ell}{\omega h}\right)\eta^{-1} \tag{9}$$

Using Eqs. (9) and (2) in (6) gives

$$\frac{S_s(\omega)}{S_p(\omega)} = \frac{64}{\sqrt{3}}\left(\frac{c_\ell}{\omega h}\right)^3\frac{h^2}{A_p}\eta^{-1} \tag{10}$$

Since ω is of the order of the first supported resonance of the panel, one uses

$$\omega \approx \kappa c_\ell\,(b^{-2}+\ell^{-2})\ .$$

Putting this into Eq. (10), one gets to a fair approximation,

$$\frac{S_s}{S_p} = 200\left(A_p/h^2\right)^2\eta^{-1}\ , \tag{11}$$

which at least has the virtue of simplicity!

Lin measured at the skin a value of S_p given by $7 \times 10^{-6}(\text{psi})^2/\text{cps}$, which if measured in free field (which is the nature of our $S_p(\omega)$) would be 1.75×10^{-6}. For a panel area[10] of 100 in.^{2} and thickness 0.04 in. and $\eta = 5 \times 10^{-3}$,

$$S_s = 2.5 \times 10^{11}\ S_p = 4.4 \times 10^5\ (\text{psi})^2/\text{cps}$$

For a 100 cps bandwidth, this gives an rms stress of

$$\sigma_{rms} = 6.6 \times 10^3 \text{ psi} . \tag{12}$$

For the 50 cps bandwidth of Lin, this would be

$$\sigma'_{rms} \approx 4.7 \times 10^3 \text{ psi} .$$

Lin states that the overall rms stress as determined experimentally is between 4000 to 8000 psi. He states that his theoretical estimate of this is 7600 psi, although from the previous discussion, it is not made clear how he arrives at this result or that his method should produce the correct result.

Of course, the precise stress predicted in Eq. (12) is subject to a fair degree of uncertainty since the value of η is only estimated, and there are several other ambiguities in the form of modal density, plate dimensions, etc. It is gratifying to see the rather simple form of the predicted stress Eq. (11) and its result which is consistent with the information we are given. It will be desirable to see if the "band forming" conditions can be simulated under laboratory conditions in subsequent research.

References

1) G. Maidanik, "Experimental design for studies of coupling between ribbed panels and acoustic fields," Contract NASr-47, Quarterly Status Report No. 1, 24 October 1961, Bolt Beranek and Newman Inc., Cambridge, Massachusetts.

2) W. Westphal, "Zur schallabstrahlung einer zu biegeschwingungen angeregten wand," Acustica 4, 603 (1954).

3) Monthly Progress Report No. 13, "Response of Electronics to Intense Sound Fields," Contract AF 33(616)-7743, Bolt Beranek and Newman Inc., Cambridge, Massachusetts, 15 January 1962.

4) Y. K. Lin, "Stresses in Continuous Skin-Stiffener Panels under Random Loading," J. Aerospace Sci. 29, 1, 67 (1962).

5) J. N. MacDuff and R. P. Felgar, "Vibration Frequency Charts," Machine Design, 7 February 1957.

6) R. H. Lyon and G. Maidanik, "Modal Density of Compound Structures," Contract AF 33(616)-7973, Monthly Progress Report No. 4, Bolt Beranek and Newman Inc., June 1961.

7) B. L. Clarkson and R. D. Ford, "Experimental Study of the Random Vibrations of an Aircraft Structure Excited by Jet Noise," USAA Report No. 128, University of Southampton, January 1960.

8) M. Heckl, R. H. Lyon, G. Maidanik, and E. E. Ungar, "New Methods for Understanding and Controlling Vibrations of Complex Structures," Bolt Beranek and Newman Report No. 875, Contract AF 33(616)-7973, August 1961, p. 20.

References (Continued)

9) F. V. Hunt, "Stress and Strain Limits on the Attainable Velocity in Mechanical Vibration," J. Acoust. Soc. Am. 32, 9, 1123 (1960).

10) Y. K. Lin, "Free Fibration of Continuous Skin-Stringer Panels," J. App. Mech. 27, 4, 669 (1960).

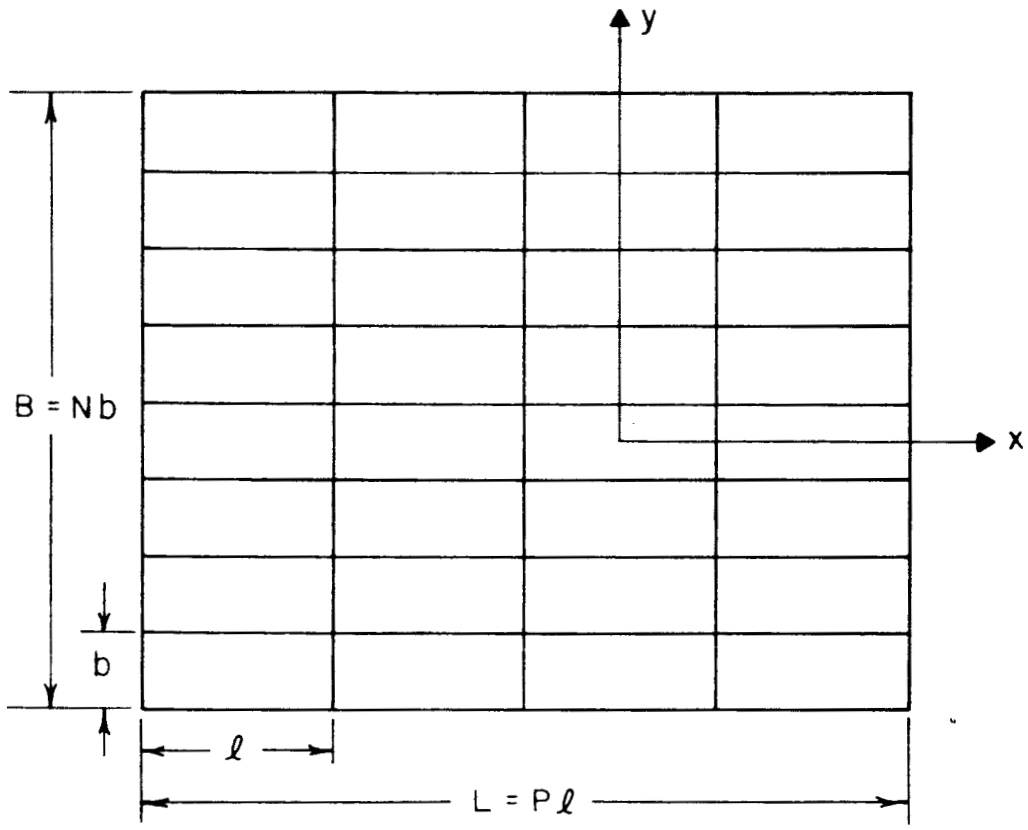

FIG. 1 DIAGRAM OF RIBBED PANEL

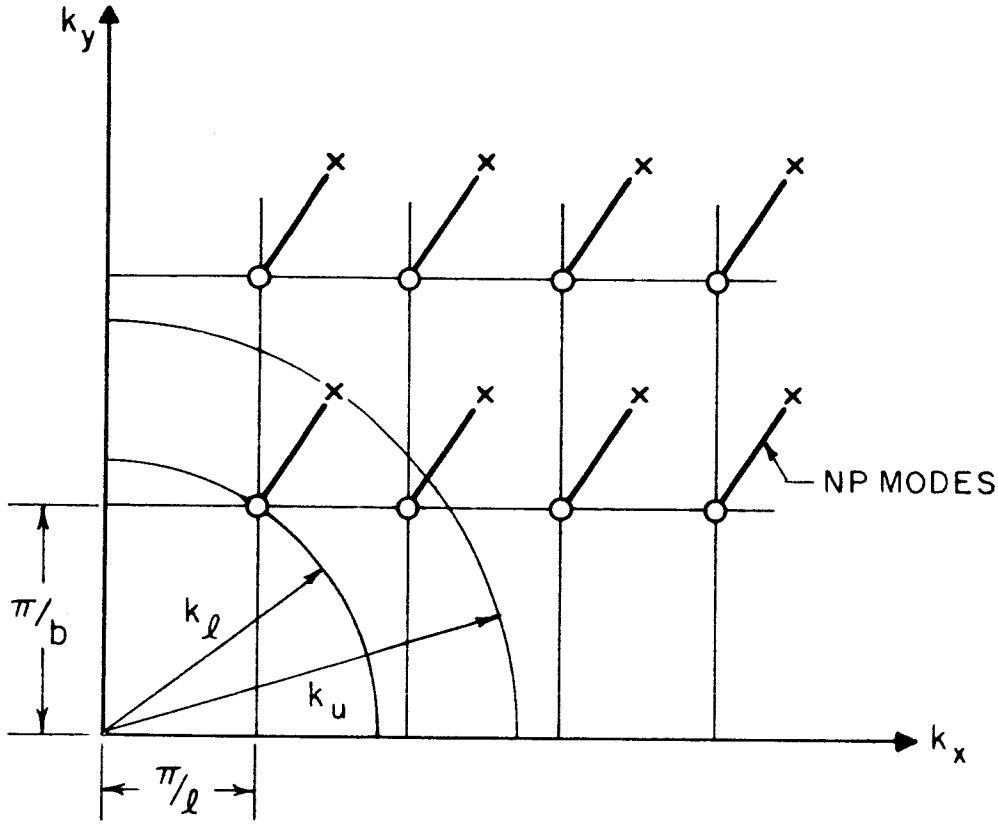

FIG. 2 WAVE NUMBER LATTICE FOR RIBBED PANEL

N62 11704

Subject: Erratum for Quarterly Status Report No. 2, January 1962
Research on Vibration in Complicated Structures by
Energy Methods

Reference: Contract No. NASr-47
BBN Job No. 110772

Page 2: 4th line from bottom; for "single pattern," read "single panel"

" 3: Equation (2); for "S_p" read "A_p"

" 5: lines 2 and 4; for "S_p" read "A_p"

" 7: line 8; for "$\omega \approx \kappa c_\ell \ldots$", read "$\omega \approx \pi^2 \kappa c_\ell \ldots$"

line 9; for "200" read "2×10^{-1}"

line 15; for "2.5×10", read 2.5×10^8

" "; for 4.4×10^5, read 4.4×10^2

" 8: Equation (12); read "$\sigma_{rms} = 2 \times 10^2$ psi"

line 3; read "$\sigma'_{rms} = 1.5 \times 10^2$ psi"

lines 13, 14; for "and its result which is"
read "but its result is not"

last sentence; add "and a consistent estimate of
stress achieved by our procedures."

The Response of Ribbed Panels to Reverberant Acoustic Fields

by

Gideon Maidanik

Bolt Beranek and Newman Inc., Cambridge 38, Massachusetts

ABSTRACT

A statistical method for estimating the response of ribbed panels to acoustic excitation is discussed. It is shown that the acceleration spectrum of the vibrational field is related to the pressure spectrum by a coupling factor which is a simple function of the radiation and mechanical resistance of the structure. The radiation resistance of a ribbed panel is studied as a function of frequency. The analysis predicts that ribbing increases the radiation resistance of the panel and hence its coupling to the acoustic field. The effect of various panel-rib boundary conditions is also considered. The results of experiments which were conducted to test the theory are reported. The agreement between theory and experiments is shown to be satisfactory.

Due to its length, the body of the paper is not included in this report. Those interested in the theoretical and experimental details are encouraged to request preprints from G. Maidanik at Bolt Beranek and Newman Inc.

Bolt Beranek and Newman Inc.
30 January 1962

Subject: Quarterly Status Report No. 2, January 1962
Research on Vibration in Complicated Structures
by Energy Methods

Reference: Contract No. NASr-47
BBN Job No. 110772

Review of Activities During the Quarter

The last quarter has seen an accelerated activity on this contract, primarily by M. Heckl, R. Lyon, and G. Maidanik, with the experimental assistance of C. Malme and the computational assistance of R. McQuillin and G. Carey. A number of theoretical and experimental studies on the radiation resistance of ribbed panels and the modal frequencies of cylinders have been completed during the quarter and other studies are near completion. We report on one completed effort in this report in the form of a topical study. The topical study is in preprint format suitable for submission to a technical journal.

Experiments on the radiation resistance of the ribbed panel previously described by Maidanik[1] have been carried out by Maidanik and Malme for panel damping, radiation resistance, and the effect of baffling. In addition, as Maidanik reports in his study, it has been possible to explain some results of other workers. Studies of panel radiation by Westphal[2] and the radiation of a small metal box by Coles and Noiseux[3] have been analyzed. In both instances, the formulas developed for radiation resistance under this contract have shown good agreement with our own experiments and the results of these other experimenters.

During the next month, we expect to prepare and submit a final report on this contract which will include two topical studies in preprint form. One of these is a theoretical and experimental study of the modal density and input impedance of cylinders by M. Heckl. The other is a study of the radiation resistance of beam plate systems by R. H. Lyon. Expenditures to date have reached approximately 90% of the contract funds. A proposal for extension of this work was submitted to NASA on 17 January 1962.

Discussion of the Stress Estimation Scheme of Y. K. Lin

Quite recently, Y. K. Lin has published an account of stress estimation in skin-stiffener panels under random loading.[4] Since he is attacking this problem in much the same spirit as we have approached our work, it is perhaps useful to summarize his approach, assumptions, and results and then see whether our methods would lead to similar or different results. In doing so we are able to discuss some points which indicate some of the uncertainties in present experimental work and how these may be reduced.

Lin discusses the response of a panel of dimensions BxL as shown in Fig. 1 made up of NP subpanels. He is particularly interested in the stress response due to the lowest modes of the structure which are made up of combinations of the lowest mode of a subpanel. There are NP of these modes and if the subpanels were completely isolated, a modal pattern of the composite system would be an NP-fold degenerate modal pattern for a single pattern. For real structures this degeneracy spreads out over a frequency range from roughly clamped edge to supported edge conditions for the subpanel as shown in Fig. 2.

Lin finds that the first band runs from 99 to 148 cps. If we look at the tables of MacDuff and Felgar,[5] for an aspect ratio ℓ/b of 1.5, the ratio

$$\frac{\omega_u - \omega_\ell}{\omega_\ell} = 0.89 \tag{1}$$

instead of a value = 0.57 as indicated by Lin. If one assumes the diagram of Fig. 2 is exact (which it is not) then this ratio is 1.25.

Let us compare the modal density in this lowest band discussed by Lin with that which we have presented in our previous work[6]

$$n(\omega) = \frac{S_p \sqrt{3}}{2\pi\, c_\ell h} = 1.35 \times 10^{-6} \frac{A_p}{h} \tag{2}$$

where dimensions are in inches, A_p is the panel area and h is its thickness. The lowest frequency band density for an aspect ratio of 1.5 is[5]

$$n'(\omega) = 1.28 \times 10^{-6} \frac{A_p}{h} \tag{3}$$

If we use the bandwidth of the first band which Lin computes, this is

$$n''(\omega) = 2.0 \times 10^{-6} \frac{A_p}{h} . \tag{4}$$

We see that neither of these is greatly different from that which we have been using which does not consider any "band forming" tendency. This may explain why our experiments on modal density have not revealed any strong tendency for modal clumping, although

there has been some slight tendency for a small hump in the $N(\omega)$ curve at low frequencies.

Lin then assumes a value of $\eta = .04$ for the loss factor without stating his source for this value. He asserts that this is sufficient to cause modal overlap to an extent that requires one to consider modal covariance in computing the stress response. It is correct to consider modes independently in determining the energy in a structure whether they are correlated or not. This is not the case when considering a dynamical response at some point; the presence of coherence means that the sum of rms response in the modes is not the total rms response. Whether modal overlap occurs depends on two factors; the number of modes in the band, and the choice of the correct damping ratio. We shall consider these separately.

The loss factor $\eta = 0.04$ may have been taken from Clarkson and Ford[7] who report this value for a section of Caravelle fuselage. Their measurement is of the envelope of the autocorrelation of the strain response. The point to be made here is that the "damping" is not necessarily related to this number. Our study of the damping in this frequency range of riveted panels typical of aircraft construction has resulted in loss factors of an order of magnitude below this value.[8] The higher value reported by Clarkson and Ford probably arises from transmission of energy from the excited part of the structure to more remote sections rather than local dissipation. It is not correct to interpret this as "damping" unless the other parts of the structure are not excited and drain energy away. The point to be made is that the autocorrelation of response only gives the damping correctly for a single mode. When a group of modes is present, the autocorrelation envelope is not determined by the damping alone.

The second uncertainty is the number of modes to be included, i.e., for a real structure, is S_p the total area of the aircraft, or the correlation area of the sound field, or what? Lin's answer appears to be that S_p is equal to the correlation area of the sound field, which is consistent with his notion that modes which have common frequency components are coherent. If we take 2/3 ft.^{2} as the panel area and 67 ft.^{2} as the correlation area at 120 cps, then one has $NP \approx 100$. The average frequency separation is then about 1/2 cps (taking Lin's value for the bandwidth) whereas the modal bandwidth would be 4 cps using his value of damping. Using the lower value of $\eta \approx 5 \times 10^{-3}$ for dissipation damping, then the modal bandwidth is 1/2 cps. The assumed damping makes considerable difference then in terms of modal overlap depending on the value of loss factor one believes.

Lin proceeds to make an estimate of stress by using Powell's modal acceptance relations. There is of course no difference between our approach and that of Powell except we have concentrated on the energy of vibration and have put our description of the coupling in terms of radiation resistance and internal damping. In estimating dynamical response, we have ignored coherence between the modes, although some adjustment of our results is possible if coherence is important.

There are some apparent inconsistencies in Lin's approach which warrant discussion. He assumes a fair amount of modal overlap, which normally takes one into a mass law or quasi-mass law behavior. At the same time he shows experimental response curves which are quite jagged in their appearance in a manner reminiscent of resonant response. He also assumes the response is limited to modes in a bandwidth $\eta\omega$ when he is just above and below the band limits (resonant response) but speaks of the acceleration

or displacement being in phase with the force. This implies mass or stiffness controlled behavior. He gives an argument for a drop off in response when the excitation frequency is in the band which does not make sense either from a resonant response or mass law behavior.

At this point then, we want to estimate the mean square stress measured by Lin applying the methods which have been developed under NASA sponsorship. Our fundamental relation is

$$\frac{\rho_s^2 \, S_a(\omega)}{S_p(\omega)} = \frac{2\pi^2 c_f \rho_p h n(\omega)}{\rho_f A_p} \cdot \mu(\omega) \tag{5}$$

where ρ_s is the surface mass density. If we use the relation between strain (or stress) and velocity for a thin plate developed by Hunt,[9] the ratio of stress spectrum to pressure spectrum (dimensionless) is given by

$$\frac{S_s(\omega)}{S_p(\omega)} = 2 \left(\frac{c_\ell}{\omega h}\right)^2 \cdot \frac{2\pi^2 c_f \rho_p h n(\omega)}{\rho_f A_p} \cdot \mu(\omega) \tag{6}$$

For our estimate of $\mu(\omega)$, we regard the subpanel vibrations as incoherent (for N modes, the coherence between panels measured for this band will be of the order of $1/\sqrt{N}$). The lowest mode of a supported panel has a radiation resistance in terms of its energy velocity (that velocity which when squared and multiplied by the mass of the panel gives its total energy) given by

$$R_{rad} = \frac{32}{3\pi} \frac{c_\ell^2}{c_f^2} \rho_f c_f h^2 \quad . \tag{7}$$

The mechanical resistance is by definition

$$R_{mech} = \eta\omega\rho_p h A_p \tag{8}$$

The ratio is then

$$\frac{R_{rad}}{R_{mech}} = \frac{32}{3\pi}\frac{c_\ell}{c_f}\frac{\rho_f}{\rho_p}\frac{h^2}{A_p}\left(\frac{c_\ell}{\omega h}\right)\eta^{-1} \tag{9}$$

Using Eqs. (9) and (2) in (6) gives

$$\frac{S_s(\omega)}{S_p(\omega)} = \frac{64}{\sqrt{3}}\left(\frac{c_\ell}{\omega h}\right)^3\frac{h^2}{A_p}\eta^{-1} \tag{10}$$

Since ω is of the order of the first supported resonance of the panel, one uses

$$\omega \approx \kappa c_\ell\,(b^{-2}+\ell^{-2})\ .$$

Putting this into Eq. (10), one gets to a fair approximation,

$$\frac{S_s}{S_p} = 200\left(A_p/h^2\right)^2\eta^{-1}\ , \tag{11}$$

which at least has the virtue of simplicity!

Lin measured at the skin a value of S_p given by $7 \times 10^{-6}(\text{psi})^2/\text{cps}$, which if measured in free field (which is the nature of our $S_p(\omega)$) would be 1.75×10^{-6}. For a panel area[10/] of 100 in.^{2} and thickness 0.04 in. and $\eta = 5 \times 10^{-3}$,

$$S_s = 2.5 \times 10^{11}\ S_p = 4.4 \times 10^5\ (\text{psi})^2/\text{cps}$$

For a 100 cps bandwidth, this gives an rms stress of

$$\sigma_{rms} = 6.6 \times 10^3 \text{ psi} . \tag{12}$$

For the 50 cps bandwidth of Lin, this would be

$$\sigma'_{rms} \approx 4.7 \times 10^3 \text{ psi} .$$

Lin states that the overall rms stress as determined experimentally is between 4000 to 8000 psi. He states that his theoretical estimate of this is 7600 psi, although from the previous discussion, it is not made clear how he arrives at this result or that his method should produce the correct result.

Of course, the precise stress predicted in Eq. (12) is subject to a fair degree of uncertainty since the value of η is only estimated, and there are several other ambiguities in the form of modal density, plate dimensions, etc. It is gratifying to see the rather simple form of the predicted stress Eq. (11) and its result which is consistent with the information we are given. It will be desirable to see if the "band forming" conditions can be simulated under laboratory conditions in subsequent research.

References

1) G. Maidanik, "Experimental design for studies of coupling between ribbed panels and acoustic fields," Contract NASr-47, Quarterly Status Report No. 1, 24 October 1961, Bolt Beranek and Newman Inc., Cambridge, Massachusetts.

2) W. Westphal, "Zur schallabstrahlung einer zu biegeschwingungen angeregten wand," Acustica 4, 603 (1954).

3) Monthly Progress Report No. 13, "Response of Electronics to Intense Sound Fields," Contract AF 33(616)-7743, Bolt Beranek and Newman Inc., Cambridge, Massachusetts, 15 January 1962.

4) Y. K. Lin, "Stresses in Continuous Skin-Stiffener Panels under Random Loading," J. Aerospace Sci. 29, 1, 67 (1962).

5) J. N. MacDuff and R. P. Felgar, "Vibration Frequency Charts," Machine Design, 7 February 1957.

6) R. H. Lyon and G. Maidanik, "Modal Density of Compound Structures," Contract AF 33(616)-7973, Monthly Progress Report No. 4, Bolt Beranek and Newman Inc., June 1961.

7) B. L. Clarkson and R. D. Ford, "Experimental Study of the Random Vibrations of an Aircraft Structure Excited by Jet Noise," USAA Report No. 128, University of Southampton, January 1960.

8) M. Heckl, R. H. Lyon, G. Maidanik, and E. E. Ungar, "New Methods for Understanding and Controlling Vibrations of Complex Structures," Bolt Beranek and Newman Report No. 875, Contract AF 33(616)-7973, August 1961, p. 20.

References (Continued)

9) F. V. Hunt, "Stress and Strain Limits on the Attainable Velocity in Mechanical Vibration," J. Acoust. Soc. Am. 32, 9, 1123 (1960).

10) Y. K. Lin, "Free Fibration of Continuous Skin-Stringer Panels," J. App. Mech. 27, 4, 669 (1960).

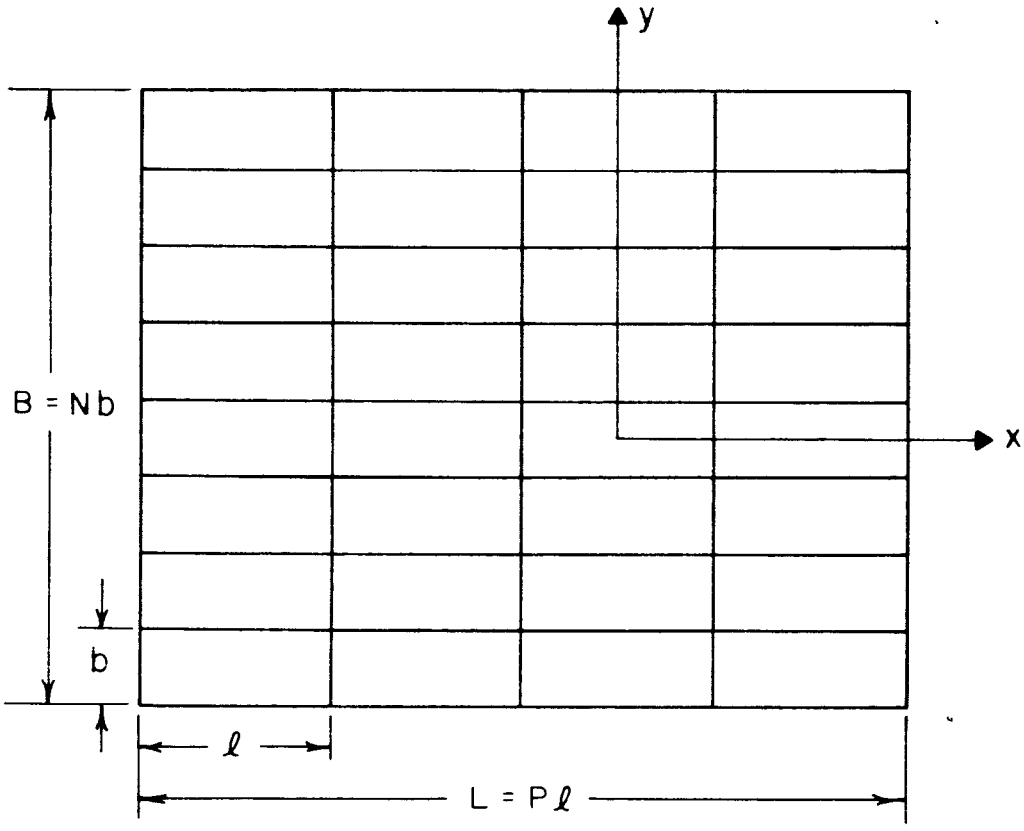

FIG. 1 DIAGRAM OF RIBBED PANEL

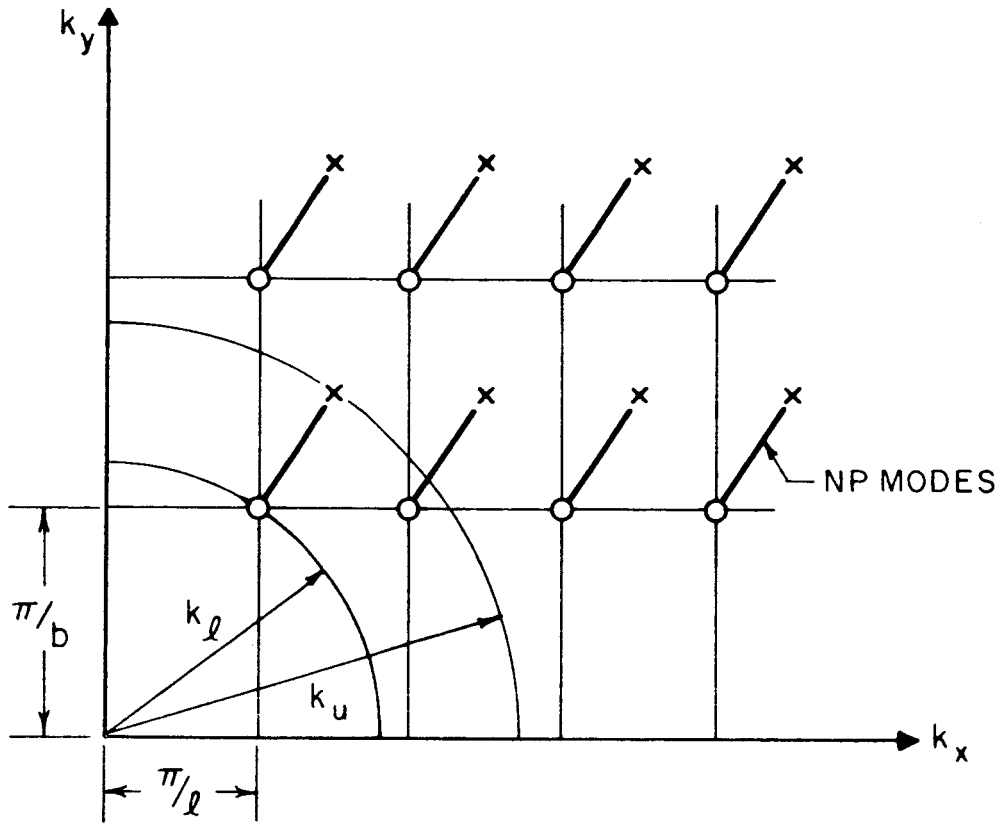

FIG. 2 WAVE NUMBER LATTICE FOR RIBBED PANEL