UNCLASSIFIED
CONFIDENTIAL

Copy 478
RM E57H01

N63-12547

42
code-1

# RESEARCH MEMORANDUM

## COMPARISON OF INJECTORS WITH A 200-POUND-THRUST AMMONIA-OXYGEN ENGINE

By Richard J. Priem and Bruce J. Clark

Lewis Flight Propulsion Laboratory
Cleveland, Ohio

OTS PRICE
XEROX $ 1.10 ph
MICROFILM $ 0.35 mf

CLASSIFICATION CHANGED TO
UNCLASSIFIED
AUTHORITY NASA LIST #1, Dec 1, 1962
By

CLASSIFIED DOCUMENT

This material contains information affecting the National Defense of the United States within the meaning of the espionage laws, Title 18, U.S.C., Secs. 793 and 794, the transmission or revelation of which in any manner to an unauthorized person is prohibited by law.

NATIONAL ADVISORY COMMITTEE
FOR AERONAUTICS
WASHINGTON
September 4, 1958

CONFIDENTIAL

UNCLASSIFIED



NATIONAL ADVISORY COMMITTEE FOR AERONAUTICS

RESEARCH MEMORANDUM

# COMPARISON OF INJECTORS WITH A 200-POUND-THRUST AMMONIA-OXYGEN ENGINE*

By Richard J. Priem and Bruce J. Clark

## SUMMARY

Characteristic exhaust velocity was measured for a small range of mixture ratios with four different injectors. Performances of parallel-sheet, like-on-like, and triplet injectors were about the same, but a parallel-jet injector had a much lower performance. Performance values for ammonia-oxygen were slightly lower than for heptane-oxygen. Screaming operation was not observed with any of the injectors.

## INTRODUCTION

Recent experimental investigations, references 1 to 3, have shown that atomization and mixing of propellants is very important for obtaining maximum engine performance for engines using various combinations of heptane, hydrogen, oxygen, and oxygen-fluorine mixtures as propellants. The investigation of the effect of atomization and mixing was extended in this study to include ammonia as a propellant to determine if the results of the previous investigations would also apply to an ammonia-oxygen rocket engine. Three injectors were selected from those used in references 1 to 3 to provide: (a) minimum mixing and atomization, (b) atomization without mixing, and (c) mixing with atomization. These injectors were the parallel jet, parallel sheet, and triplet, respectively. Tests were also made with a like-on-like injector, similar to that of reference 4. The like-on-like injector atomized the fuel by impinging two jets and atomized the oxidant by the use of very small holes.

## APPARATUS AND PROCEDURE

### Rocket Installation

The rocket engine consisted of injector, chamber, and convergent nozzle in separable units. Chambers 2 inches in diameter and 3 or 8 inches long were used. The contraction ratio of the engine was 6.4. The engine

* Title, Unclassified

UNCLASSIFIED



was spark ignited and had about a 3-second run duration. Oxygen temperature was maintained constant at -320° F by a liquid-nitrogen bath. The ammonia injection temperature was between 54° and 80° F.

### Injectors

Injectors similar to those used in references 1 to 4 were tested (fig. 1). The injection velocity of the fuel was 90 feet per second and of the oxidant was 60 feet per second, the same as used in reference 1. This required a change in the oxidant hole size from 0.111-inch diameter to 0.086-inch diameter as shown in figure 1, because of the difference in the stoichiometric weight-flow ratios for heptane-oxygen and ammonia-oxygen. The design injector pressure drop for an oxidant-to-fuel weight ratio of 1.30 was 100 pounds per square inch.

### Instrumentation

Chamber pressure was measured at the injector face with a 500-pound-per-square-inch recording Bourdon tube instrument. Volumetric flow rates were measured with rotating-vane-type meters. The temperatures of the flowing propellants and coolant were measured with thermocouples. Reproducibility of measurements was within ±1 percent.

## RESULTS

The characteristic exhaust velocity $c^*$ was determined for oxidant-to-fuel weight ratios between 1.1 and 1.5 and is reported as a percentage of the theoretical performance at the operating mixture ratio (characteristic-exhaust-velocity efficiency). Theoretical equilibrium performance for ammonia-oxygen at 300 pounds per square inch of chamber pressure is shown in figure 2. The results summarized in table I are the arithmetic average of five or more runs for each injector and chamber length. The results of the heptane-oxygen investigation reported in reference 1 are also included in table I for comparison purposes.

### Parallel-Jet Injector

The characteristic-exhaust-velocity efficiency was 35.5 percent in an 8-inch chamber. This injector, described in reference 1 as producing no mixing or atomization, for heptane-liquid oxygen had an efficiency of 39.5 percent.

UNCLASSIFIED



## Parallel-Sheet Injector

The characteristic-exhaust-velocity efficiencies with the parallel-sheet injector were 72.8 and 83.6 in 3-inch and 8-inch chambers, respectively. Using a parallel-sheet injector to atomize both propellants increased characteristic-exhaust-velocity efficiency 48 percentage points above the nonatomizing parallel-jet injector in an 8-inch chamber. For the heptane - liquid-oxygen engine the efficiencies reported in reference 1 were 71.5 and 81.5 for 3-inch and 8-inch chambers, respectively. Atomizing both propellants with parallel sheets in a heptane - liquid-oxygen engine increased performance 42 percentage points above the non-atomizing parallel-jet injector in an 8-inch chamber.

## Like-On-Like Injector

The characteristic-exhaust-velocity efficiencies were 69.9 and 83.3 percent for 3-inch and 8-inch chambers, respectively. This injector gave 72.3 and 83.6 percent performances with heptane-liquid oxygen.

## Triplet Injector

The performances of this injector were 76.2 and 81.2 percent for 3-inch and 8-inch chambers, respectively. With heptane-oxygen the performances were 82.3 and 91.6 percent for chamber lengths of 3 and 8 inches, respectively. The relatively poorer performance of the triplet injector with ammonia-oxygen is attributable to the smaller quantity of oxygen impinging against the fuel with ammonia-oxygen. Atomizing and mixing the ammonia and oxygen with this injector increased performance 45 percentage points above the nonatomizing or nonmixing parallel-jet injector in an 8-inch chamber. With heptane-oxygen the triplet injector increased performance 52 percentage points above the parallel-jet injector for an 8-inch chamber. For heptane-oxygen, atomizing and mixing the propellants with a triplet injector increased performance 10 percentage points above the atomizing but nonmixing parallel-sheet injector. However, with ammonia-oxygen the triplet injector decreased performance by $2\frac{1}{2}$ percentage points below that of the parallel-sheet injector in an 8-inch chamber.

## Summary of Injector Performance

The average ratio of performance with ammonia-oxygen to performance with heptane-oxygen was 0.96 for all injectors and chambers, indicating that the principles observed with heptane-oxygen for improving performance also apply to an ammonia-oxygen engine. Deviations from this average for particular injectors and chamber lengths were less than ±0.8.

UNCLASSIFIED



Instabilities. - Screaming operation was not encountered during this investigation. This is in contrast to the results reported in reference 1 where the triplet injector was very unstable in an 8-inch chamber and the parallel-sheet and parallel-jet injectors occasionally screamed.

Starting. - Starts were smooth with no noticeable detonations with a 1-second oxidant lead. Reducing the oxidant lead resulted in extremely hard starts or no ignition.

Heat transfer. - Over-all heat-transfer rates were measured with an 8-inch water-cooled engine. The results were:

| Injector | Over-all heat-transfer rate, $\frac{\text{Btu}}{(\text{sq in.})(\text{sec})}$ |
|---|---|
| Ammonia - liquid oxygen | |
| Parallel-jet | 0.21 |
| Parallel-sheet | .21 |
| Like-on-like | .48 |
| Triplet | .77 |
| Heptane - liquid oxygen | |
| Like-on-like | 0.54 |

## SUMMARY OF RESULTS

An investigation of different injection techniques for a nominal 200-pound-thrust, ammonia-oxygen rocket engine has indicated the following results:

1. Parallel-jet injectors had a much lower performance than parallel-sheet, like-on-like, or triplet injectors.

2. The performance values of the ammonia-oxygen engine with each injector were nearly the same as those of a heptane-oxygen engine.

3. Screaming occurred less with the ammonia-oxygen than with the heptane-oxygen engine.

Lewis Flight Propulsion Laboratory
National Advisory Committee for Aeronautics
Cleveland, Ohio, August 5, 1957

UNCLASSIFIED



## REFERENCES

1. Heidmann, M. F., and Auble, C. M.: Injection Principles from Combustion Studies in a 200-Pound-Thrust Rocket Engine Using Liquid Oxygen and Heptane. NACA RM E55C22, 1955.

2. Auble, Carmon M.: A Study of Injection Processes for Liquid Oxygen and Gaseous Hydrogen in a 200-Pound-Thrust Rocket Engine. NACA RM E56I25a, 1957.

3. Heidmann, M. F.: A Study of Injection Processes for 15-Percent Fluorine - 85-Percent Oxygen and Heptane in a 200-Pound-Thrust Rocket Engine. NACA RM E56J11, 1957.

4. Heidmann, M. F.: Propellant Vaporization as a Criterion for Rocket-Engine Design; Experimental Effect of Fuel Temperature on Liquid-Oxygen - Heptane Performance. NACA RM E57E03, 1957.

TABLE I - SUMMARY OF PERFORMANCE DATA

| Injector | Chamber length, in. | Heptane - liquid oxygen | | Ammonia - liquid oxygen | | Relative performance of Ammonia - liquid oxygen / Heptane - liquid oxygen |
|---|---|---|---|---|---|---|
| | | Characteristic exhaust velocity, $c^*$ | Characteristic-exhaust-velocity efficiency | Characteristic exhaust velocity, $c^*$ | Characteristic-exhaust-velocity efficiency | |
| Parallel jet | 8 | [a]2350 | 39.5 | 2060 | 35.5 | 0.898 |
| Parallel sheet | 3<br>8 | [a]4250<br>[a]4850 | 71.5<br>81.5 | 4220<br>4850 | 72.8<br>83.6 | 1.018<br>1.025 |
| Like-on-like | 3<br>8 | 4302<br>4970 | 72.3<br>83.6 | 4054<br>4838 | 69.9<br>83.3 | 0.966<br>.996 |
| Triplet | 3<br>8 | [a]4900<br>[a]5450 | 82.3<br>91.6 | 4427<br>4530 | 76.2<br>81.2 | 0.927<br>.886 |
| | | | | | | Average performance, 0.960 |

[a]Ref. 1.

UNCLASSIFIED



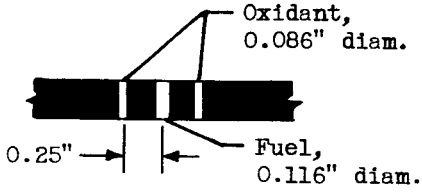


(a) Parallel jets.

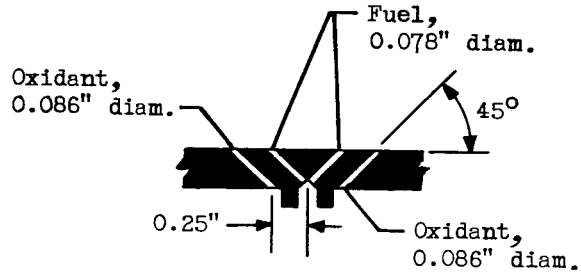


(b) Parallel sheets.

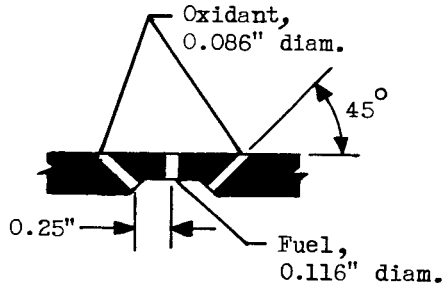


CD-5807

(c) Triplet.

Figure 1. - Injectors.

UNCLASSIFIED



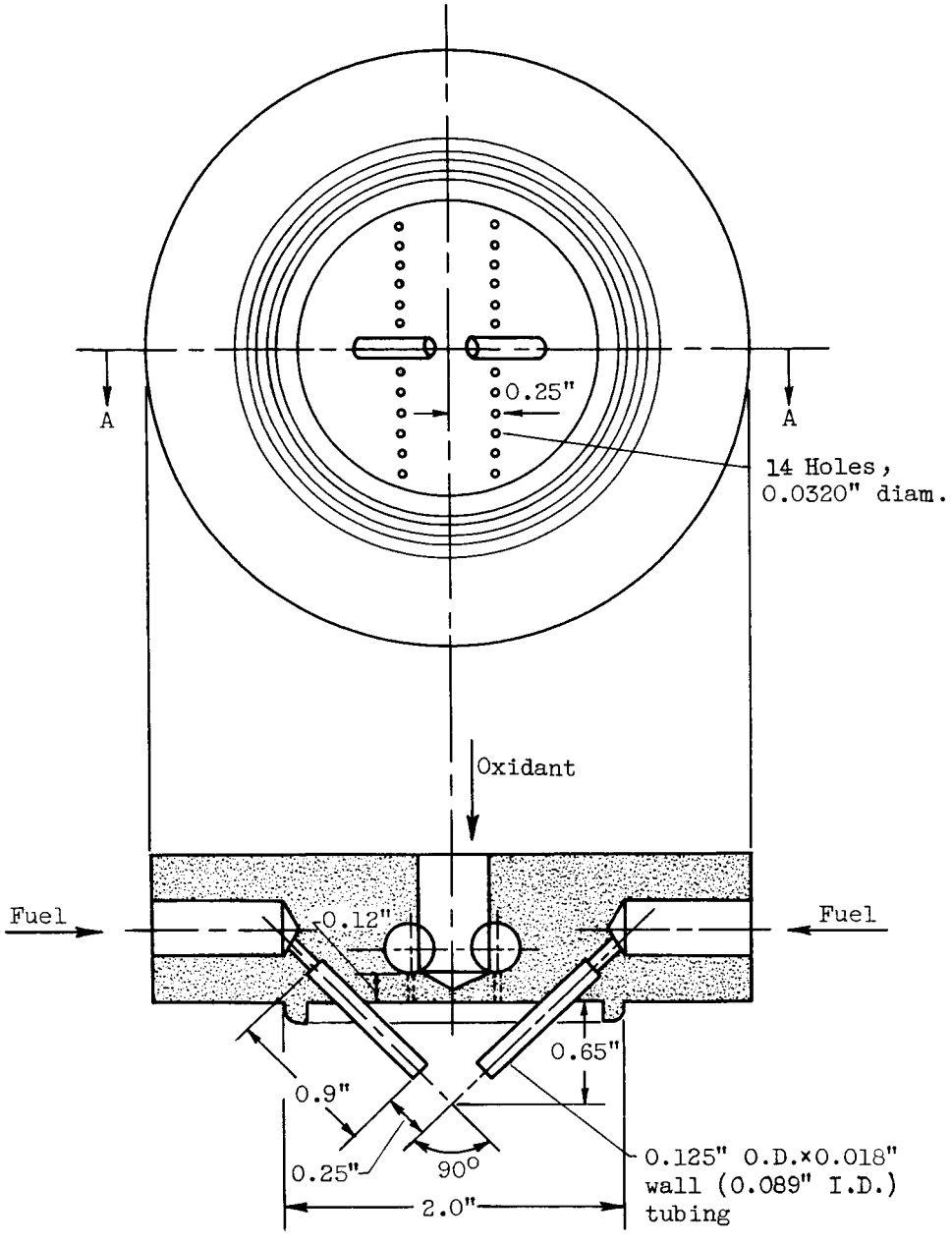


Section A-A

(d) Like-on-like.

Figure 1. - Concluded. Injectors.

UNCLASSIFIED



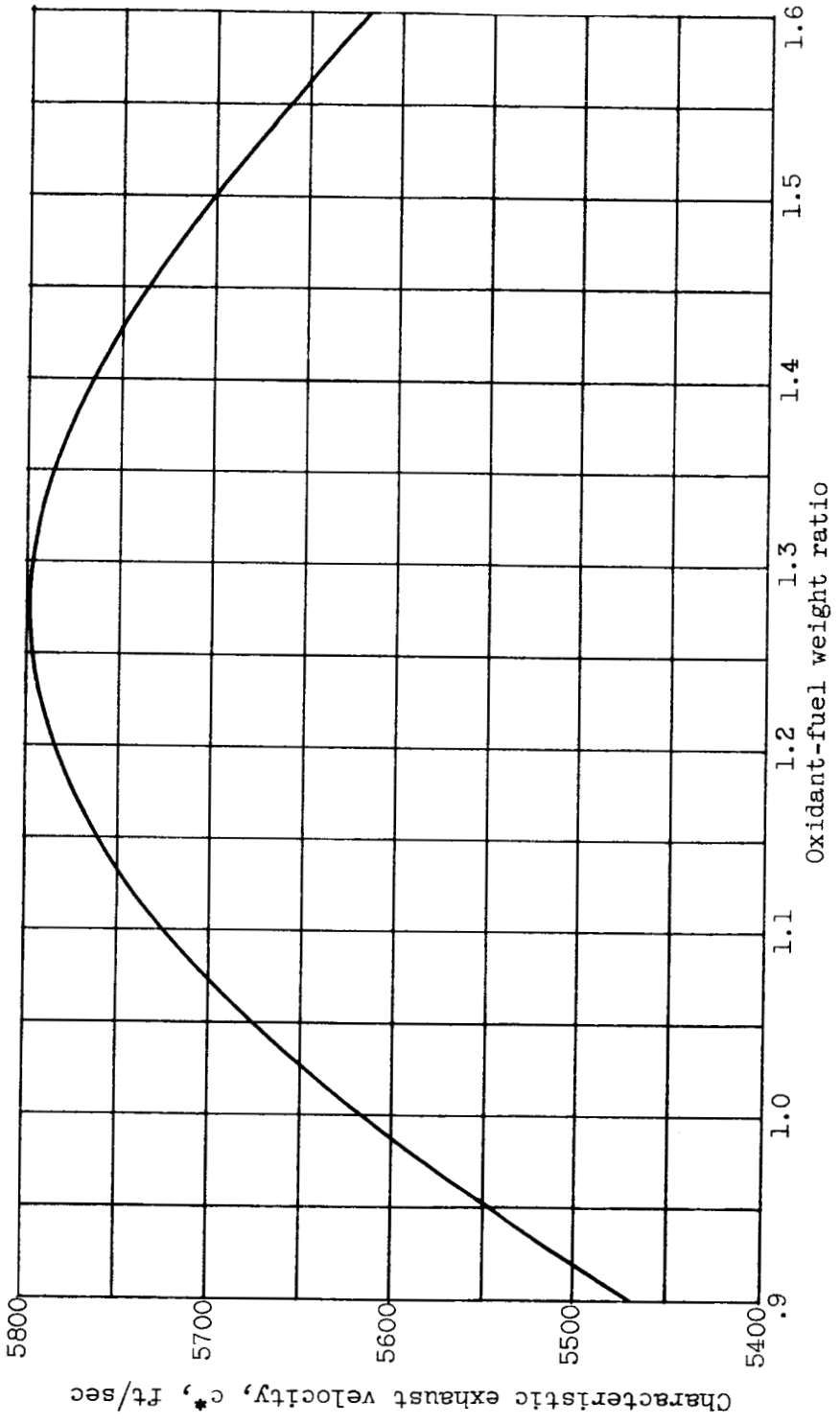


Figure 2. - Theoretical equilibrium performance of ammonia-oxygen at 300 pounds per square inch.



NACA - Langley Field, Va.

UNCLASSIFIED

CONFIDENTIAL

CONFIDENTIAL