N63-21893

NASA TECHNICAL NOTE

NASA TN D-1969

NASA TN D-1969

N63-21893

SIMULATOR STUDY OF A SATELLITE ATTITUDE CONTROL SYSTEM USING INERTIA WHEELS AND A MAGNET

by James J. Adams, W. E. Howell,
and Hugh P. Bergeron;
Langley Research Center,
Langley Station, Hampton, Va.

NATIONAL AERONAUTICS AND SPACE ADMINISTRATION • WASHINGTON, D.C. • OCTOBER 1963

TECHNICAL NOTE D-1969

SIMULATOR STUDY OF A SATELLITE ATTITUDE CONTROL SYSTEM USING INERTIA WHEELS AND A MAGNET

By James J. Adams, W. E. Howell, and Hugh P. Bergeron

Langley Research Center
Langley Station, Hampton, Va.

NATIONAL AERONAUTICS AND SPACE ADMINISTRATION

NATIONAL AERONAUTICS AND SPACE ADMINISTRATION

TECHNICAL NOTE D-1969

SIMULATOR STUDY OF A SATELLITE ATTITUDE CONTROL SYSTEM USING INERTIA WHEELS AND A MAGNET

By James J. Adams, W. E. Howell, and Hugh P. Bergeron

SUMMARY

Three-degree-of-freedom tests of an automatic attitude control system for a satellite have been made by using an inertia simulator mounted on an air bearing. The control torques used in the system were the inertia reaction torque of three body-mounted flywheels and the magnetic reaction torque of a permanent bar magnet. The control signals used for the wheel were an attitude input provided by light sensors and the wheel-angular-velocity input provided by the tachometer. The magnet was used for removing momentum from the system and was controlled by the wheel angular velocity. Tests were made to demonstrate the stability of the system, the sensitivity that could be obtained with the system, and the operation of the magnet system. The results show that attitude control that would be satisfactory for many missions can be achieved with this control system.

INTRODUCTION

The use of inertia reaction wheels for satellite attitude control has been suggested in many studies of long-time missions where the weight of the control system may be a problem. The use of three wheels mounted on mutually perpendicular axes is the commonly suggested arrangement as a torque-producing device. The principal difference in the various suggested systems is in the method of obtaining a damping signal from the control section of the system. Differentiating the attitude error signal, using a rate-gyro signal, and using a tachometer feedback signal were some of the methods studied. Another factor to be considered is eventual saturation of the inertia wheels. Therefore, a companion system must be devised to remove the excess wheel momentum (unload). Jet systems and various magnetic-field reaction devices have been suggested for removing momentum. References 1 to 8 are some of the studies that have been made on these subjects.

Reference 1 presents the results of a three-degree-of-freedom theoretical study and a single-degree-of-freedom model test of a system which uses a tachometer feedback for damping and a permanent magnet for removing momentum. This type of system appears to offer many advantages for certain missions. The control devices suggested by the theoretical study of the system, referred to as the

simplified system, are reliable elements. The study shows that for a typical mission the suggested control would provide stable, accurate attitude control and satisfactory removal of momentum.

A small-scale-model test program of the proposed system was carried out to verify the operation of the system. A three-degree-of-freedom inertia simulator mounted on an air bearing was used. The tests were made to demonstrate the stability of the system, the sensitivity that could be obtained, and the ability of the magnet to provide torques on all axes.

DESCRIPTION

Control Theory

The control torques used in the system are the acceleration reaction torque of three inertia wheels and the magnetic reaction torque of a permanent bar magnet. The acceleration of the wheels is commanded by the attitude error signal, to provide the desired attitude control, and by the wheel-angular-velocity signal, to provide the necessary damping. Three identical independent systems are provided so as to achieve complete control. The fact that the wheel-angular-velocity signal will provide damping is not immediately obvious. If, for a moment, the system is considered to be operating with no external torques applied, the wheel angular velocity is exactly proportional to the satellite angular velocity. In this situation the wheel-angular-velocity signal and a signal from a body-mounted rate gyro are equivalent, and either one could be used to provide a damping signal. The advantage of the wheel-angular-velocity signal is that it can be mechanized, with a tachometer, with greater precision than could be obtained with a rate-gyro signal. However, if an external torque introduces momentum into the system, which will be absorbed by the inertia wheels, the wheel-angular-velocity pick-off will then introduce a signal which must be balanced. A rate-gyro signal would not be subject to this disadvantage. The necessary balancing signal can be provided by an attitude error signal, which would require that an attitude error proportional to the stored momentum exist, or by integrating the attitude error, which would supply the necessary balancing signal with no steady-state attitude error. If an integrated signal is not used, the steady-state attitude error can be minimized by using a second torque source, such as a magnetic reaction device, to remove the stored momentum continuously.

A magnetic device, such as a permanent bar magnet, can produce a torque only on an axis perpendicular to the external magnetic field. The device cannot therefore supply continuous momentum removal from all three wheels. However, as the satellite goes around in orbit, the field direction will be continuously changing so that momentum can be removed from each wheel at certain intervals. Considerations of the relative size of the wheels and the magnet will depend on the magnitude of the nonsecular portion of the applied disturbance torques and on the time between each application of the magnet torque on a particular axis. The wheels must have at least a large enough momentum capacity to store the momentum produced by the disturbance experienced during the time between applications of the magnet torque, and the magnet must be large enough to remove all stored momentum during

the time that it is operating on the axis being considered. The example given in reference 1 describes the wheel and magnet size required for one given orbit and disturbance. In reference 1 a 50-foot-long cylindrical satellite with moments of inertia of 50,000, 50,000, and 5,000 slug-feet^2 was assumed to be in a 300-mile-high orbit and subject to disturbances with a maximum amplitude of 0.04 foot-pound. Wheels with a moment of inertia of 0.1 slug-foot^2 and a magnet which weighed 30 pounds were required.

The system tested, in which a tachometer signal is used for damping and a bar magnet is used for removal of momentum, will allow attitude errors to develop. These errors can be minimized by using a high gain on the attitude signal. The effectiveness of the magnet can also be increased by using a high gain on the signal used to command magnet deflection. Such a situation results in the system operating in a saturated condition over most of the range of the control variable. This type of linear saturated control signal is used in the present tests.

Simulator

The simulator consisted of a table supported by a 3-inch-diameter air bearing. Air, at 20 lb/sq in., was admitted to the cup of the air bearing by 12 holes located around the inside of the cup. Except for the power supply and mode switch for the magnet control, the entire control system was mounted on the table. The power leads and the leads to the mode switch were connected to the table by small coiled wires that extended down from a height of about 10 feet. Mounted in this manner, the wires produced negligible torque on the table during operation. The lights used to establish the reference attitude were 150-watt flood lights. The simulator weighed 70 pounds without the magnet system, and approximately 100 pounds with the magnet system. The approximate moments of inertia about the control axes are given in the following table:

	Moment of inertia
Without magnet system:	
X-axis	0.6 slug-foot^2
Y-axis	0.6 slug-foot^2
Z-axis (vertical)	1.14 slug-feet^2
With magnet system:	
X-axis	1.1 slug-feet^2
Y-axis	1.1 slug-feet^2
Z-axis (vertical)	2.0 slug-feet^2

These inertias are for the control axes (the axes defined by the control wheels) and are not for the principal axes of the simulator. The simulator was not constructed symmetrically; therefore, it is not known exactly how far these control axes are separated from the principal axes. However, a brief spin test indicated that the principal axes were displaced approximately 45° from the X- and Y-axes and 10° from the Z-axis with the magnet system installed on the table.

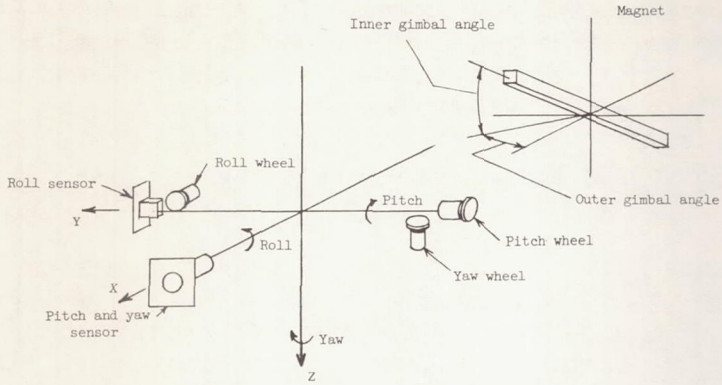

Figure 1.- Wheel and magnet axis systems.

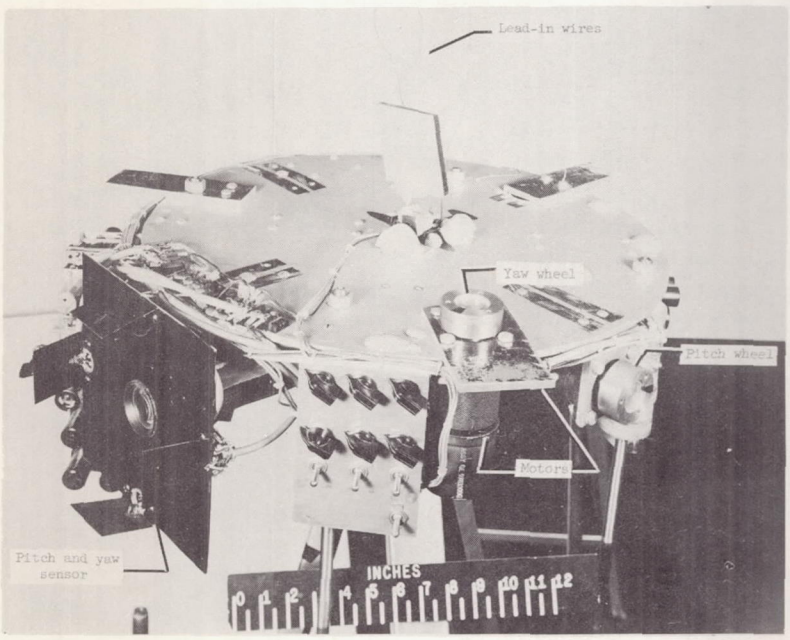

L-60-2707.1

Figure 2.- Three-degree-of-freedom inertia simulator.

A drawing of the table showing the alinement of the wheel, magnet, and sensor axes is shown in figure 1. A photograph of the simulator without the magnet system is shown in figure 2. A photograph of the magnet gimbal system mounted on the simulator is shown in figure 3. The moment of inertia of the control wheels was 0.0001 slug-foot^2. The servomotors used to drive the wheels were series-wound, direct-current motors with a maximum rotation of about 12,000 rpm. These motors had a stall torque of approximately 0.1 foot-pound. The magnet was made of Alnico V, had a residual intensity of 1.2 webers per square meter, was 1 by 1 by 10 inches, and weighed 2.55 pounds. The magnet was mounted in a gimbal system that allowed rotation about two axes.

The attitude sensors consisted of four phototransistor cells per axis - a total of 12 cells. On each axis, two of these cells were located behind an optical lens so as to provide a very sensitive inner sensor for control about zero attitude. The outer two cells were placed outside of the optical lens so as to provide a wide-angle signal with low sensitivity. The outer sensors were provided with light shades so that they would be alternately exposed to the light when the attitude error was greater than 1°. The pitch and yaw sensors were grouped together so that the inner sensors were arranged in the form of an open cross behind a single lens, as is shown in figure 4. The optics were focused so that the light spot covered half of each of the two opposite cells at zero deflection. The attitude signal was derived by comparing the output of the two cells. The roll sensor was positioned 90° to the plane formed by the pitch and yaw sensors, and was arranged in a manner similar to that of the pitch sensor.

A variation of the inner sensor output with deflection of one axis of the simulator is shown in figure 5; the corresponding variation of the angular velocity of the wheel with deflection is also included. The output of the sensor was

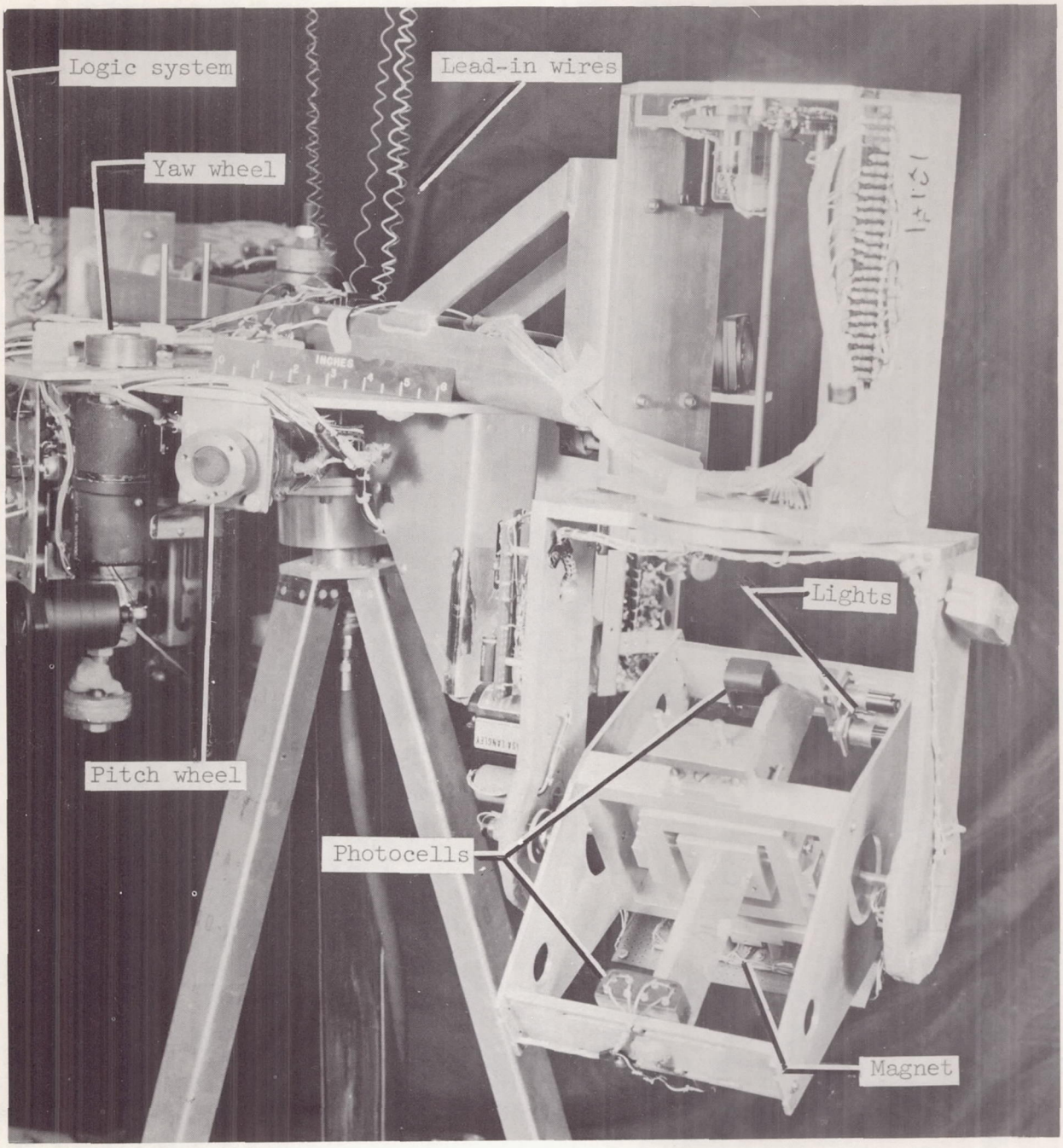

L-63-120.1

Figure 3.- Magnet system mounted on inertia simulator.

linear between 0.75° and -0.75° and continued to rise up to 1.5°. At deflections higher than 1.5° the outer sensor provided the error signal, which was essentially constant out to several degrees. Although the inner sensor provided an increasing signal up to 1.5°, the output of the wheel motors was saturated at approximately 0.25°.

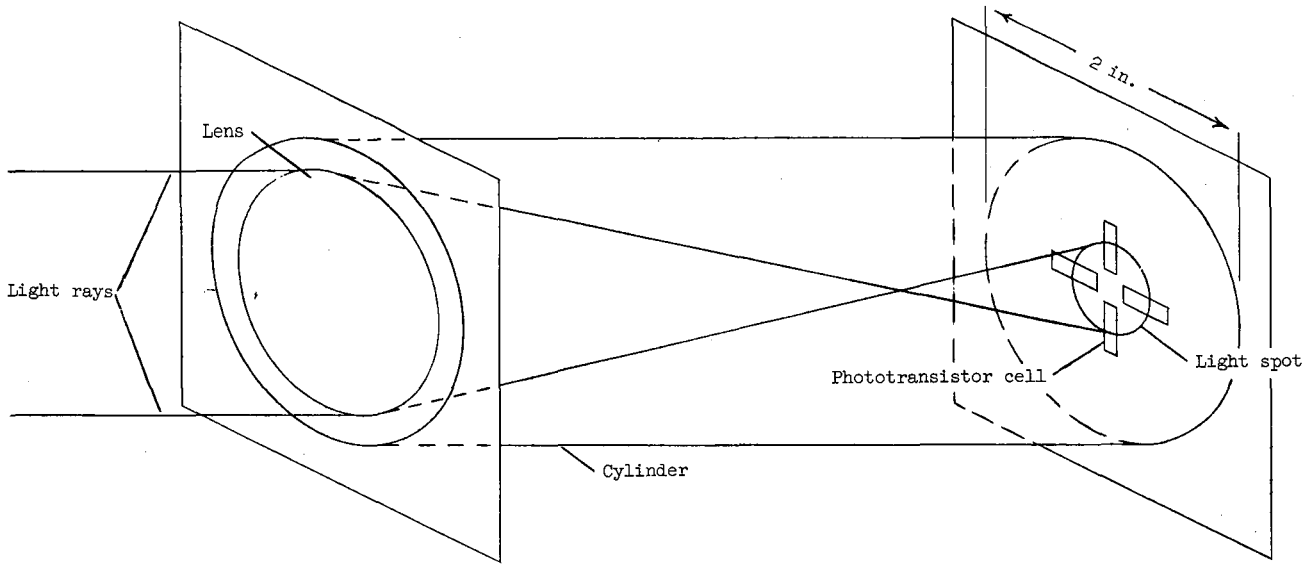

Figure 4.- Inner sensor configuration.

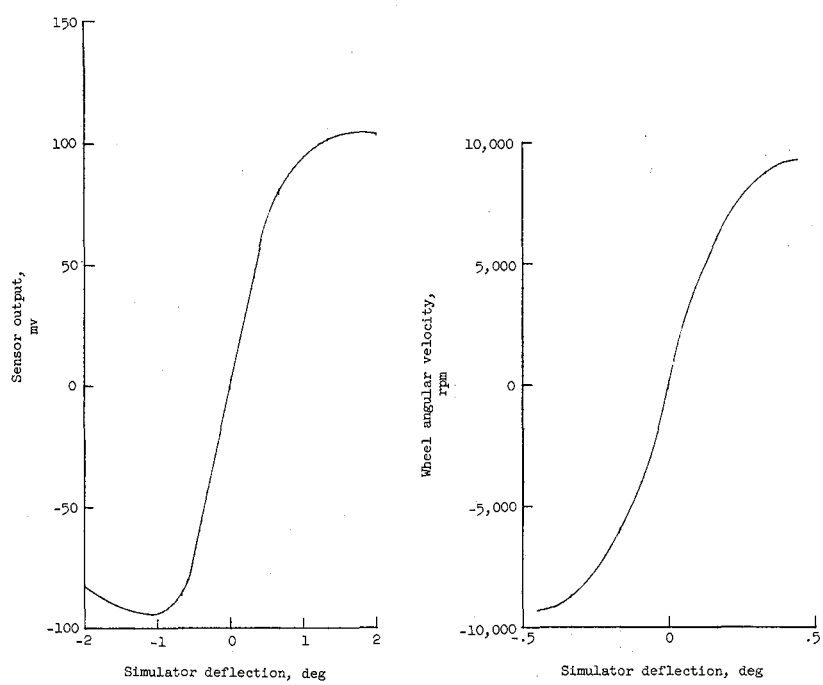

Figure 5.- Variation of inner sensor output and angular velocity with deflection.

Shown in figure 6(a) is the response of the motor to the maximum signal output of the light sensor both with and without tachometer feedback. Without the tachometer feedback the response is quite rapid. When the signal is removed, friction in the motor causes the wheel to slow down in an erratic manner. Since the maximum signal saturates the wheel by a large margin, the addition of the tachometer feedback has no effect on the rise time of the wheel response, as is shown in the second part of figure 6(a). When the signal is removed the wheel stops in less time than is required for the initial rise. Response to a small signal (too small to be recorded effectively) which is well within the proportional response region for the wheel is shown in figure 6(b). Without tachometer feedback the motor response is saturated even though the signal is very small. However, with tachometer feedback the wheel angular velocity is well controlled, with a response that

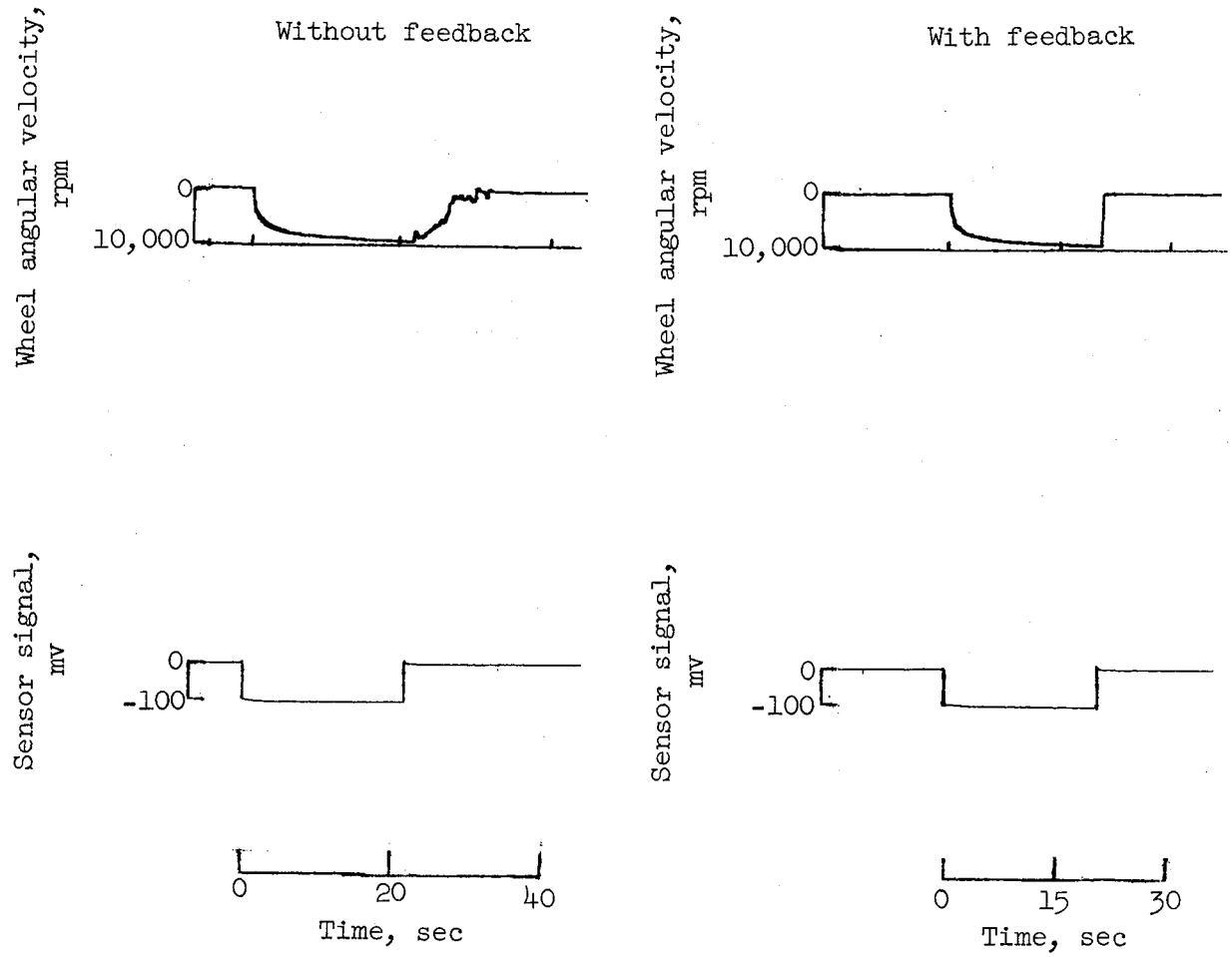

(a) Response to large step signal.

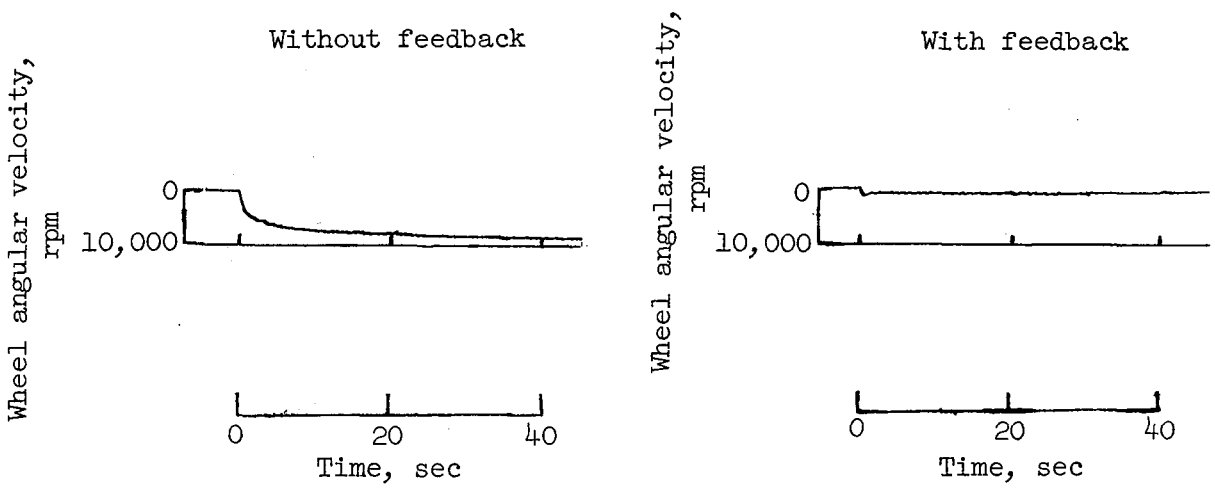

(b) Response to small step signal.

Figure 6.- Response of wheel to step input.

can be approximated with a first-order response with a time constant of approximately 0.1 second.

The magnet system has to perform the following functions: (1) determine the direction of the external magnetic field, (2) select the wheel which has the proper orientation, with respect to the direction of the magnetic field, to be unloaded, and (3) select the proper sign of the tachometer signal for command of the magnet deflection to effect the unloading. It is also necessary that magnet and wheel system operate in a stable manner.

The magnet has two modes of operation - a trim mode in which the direction of the external field is established, and an operate mode in which the magnet torque is applied to the proper axis. In order to determine the direction of the magnetic field properly, it was required that the magnet be provided with a low-friction gimbal support. It was not possible to provide the necessary low level of friction with a single set of gimbals which also had to carry the necessary slip rings. Therefore, a gimbal system was constructed with a set of free-floating, pivot-bearing gimbals which allowed a limited amount of angular freedom with respect to the set of servo-driven gimbals. The servo-driven gimbals were slaved to the free-floating gimbals by means of photocell position sensors which measured the position of the free-floating gimbals with respect to the servo-driven gimbals. Stops were provided on the free-floating gimbals to prevent the inner gimbals' getting outside the field of view of the photocells. With this arrangement the magnet is able to seek north freely, and the servo-driven gimbals are positioned in the proper trim position. Alinement from the worst possible condition, that is, with the servo-driven gimbals in error 180° on each axis, required approximately 90 seconds.

When the direction of north is established, the corresponding servo-driven gimbal angles are stored in a memory unit, the logic system is energized to select the proper wheel for unloading, and the magnet system is put in the operate mode. In this mode the selected tachometer signal is fed into a position servo which drives a synchrodifferential. Into one winding of this differential is fed a signal which represents the direction of north as zero. The output of this differential (which is an angle from north, proportional to wheel velocity) is fed through the logic system to the proper gimbal motor to deflect the magnet and provide the torque that unloads the wheel. A block diagram of a single axis of the wheel system and the magnet system in the operate mode is shown in figure 7, and a diagram of the magnet in the trim mode is shown in figure 8.

The essential part of the logic system consists of the two segmented sliprings on the servo-driven outer and inner gimbal axes. Each of the segmented sliprings is divided into four quadrants. Depending upon which quadrant the magnet is in, appropriate relays are tripped by power applied through these sliprings, and this sequence selects which wheel to unload. A flow diagram of the logic system is shown in figure 9.

In order to illustrate the factors which determine which wheel will be unloaded by the magnet, figure 10 is presented. This figure shows one quadrant of the entire area defined by the axis system of the control system. When the direction of north is in the area close to the XY-plane, relative to the origin

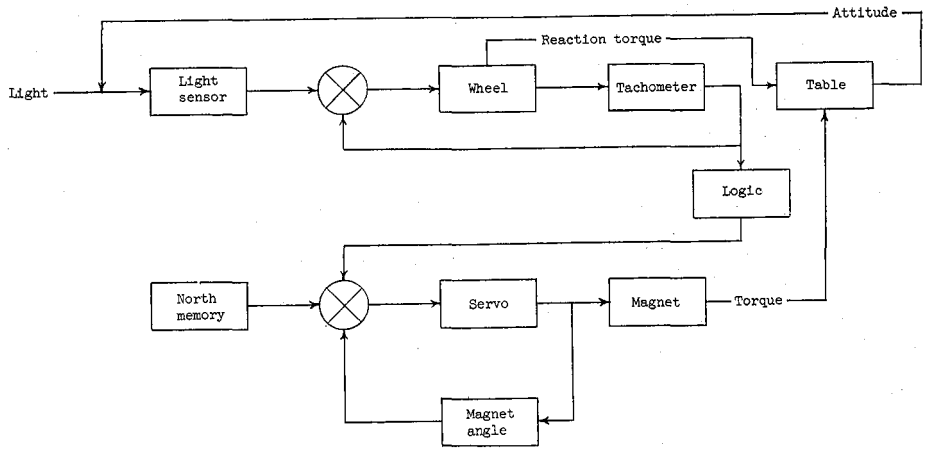

Figure 7.- Block diagram of one axis of control system with magnet in the operate mode.

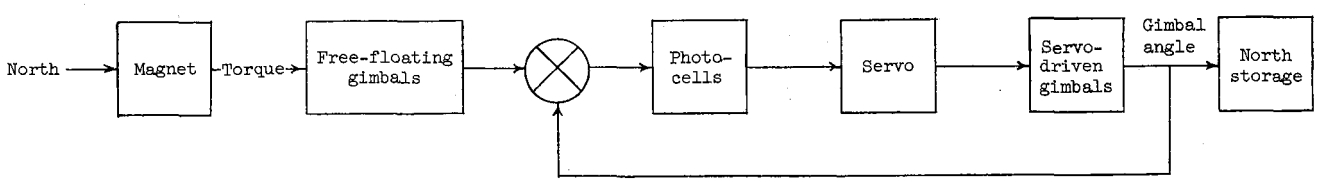

Figure 8.- Block diagram of magnet trim mode.

of the axis system, the magnet is used to unload the Z-axis wheel. The Z-axis also corresponds to the outer gimbal of the magnet. The magnet will be most effective in this operation when north is in the XY-plane and becomes less effective the closer north approaches the upper boundary of the indicated area. The magnet will also produce more undesired cross-coupled torques, on the X- and Y-axes, the closer north is to the upper boundary. When north is in one or the other of the two upper areas, the magnet is used to unload the X- or Y-axis wheel. The magnet is most effective for the X-axis wheel when north is in the YZ-plane; it is most effective for the Y-axis wheel when north is in the XZ-plane; and it is least effective when north is on the line dividing these two areas. The area designated for the Z-axis wheel can be reduced in size by bringing the upper boundary closer to the XY-plane, by changing the size of the slipring segments. Such a reduction also reduces the cross-coupling problem. This flexibility will allow the magnet momentum-removal system to be tailored to meet the particular requirements that may exist for any specified application. What has been illustrated herein for one quadrant applies to all quadrants of the axis system.

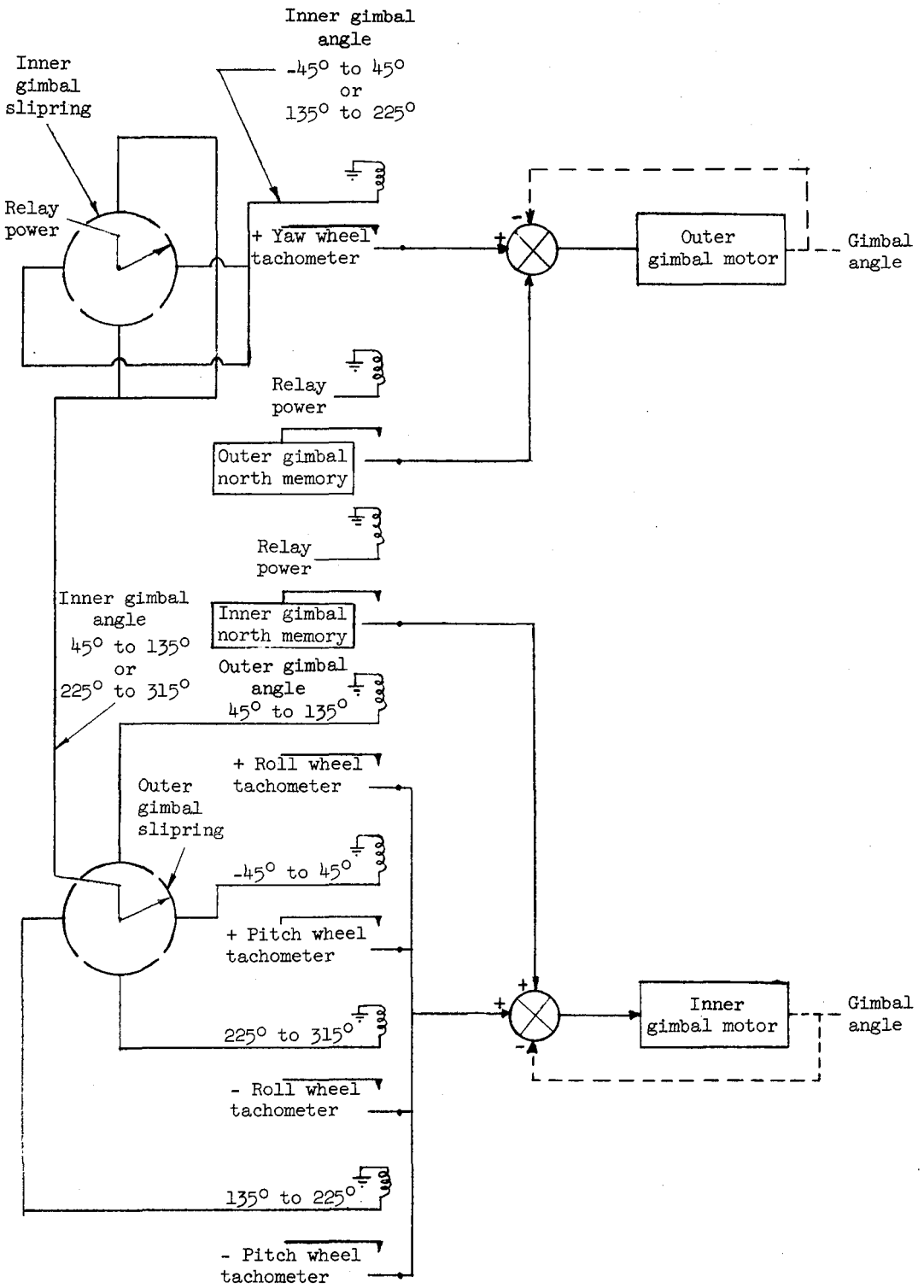

Figure 9.- Flow diagram for logic system.

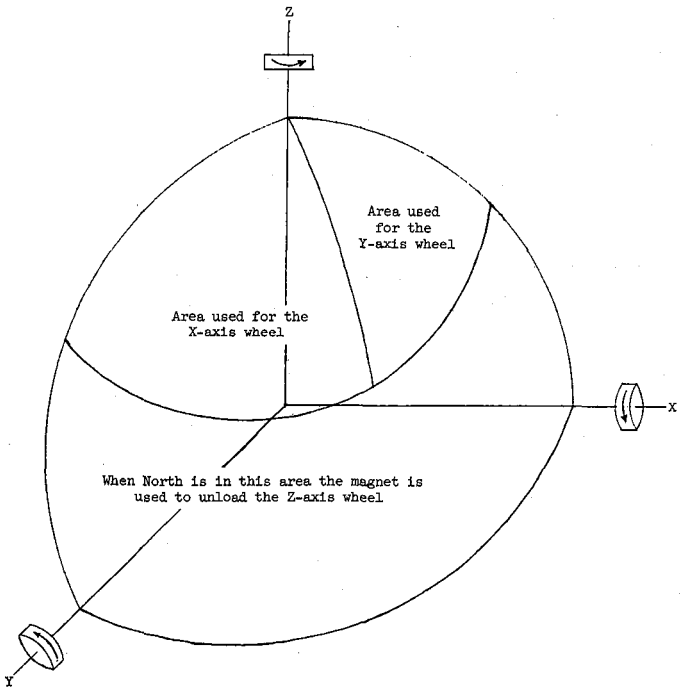

Figure 10.- Spherical quadrant defining magnet capabilities.

TESTS AND RESULTS

The initial tests were made to check the accuracy and stability of the attitude control system by using the inertia wheels alone. For instrumentation, a mirror was mounted on the table, which reflected a crosshair image 70 feet to a screen. This arrangement resulted in a 1-inch deflection on the screen corresponding to 120 seconds of arc of pitch and yaw of the table. This instrumentation was used to check the relative accuracy of the control system. The arrangement, however, did not allow records to be taken. In order to obtain time-history records, the output of the light sensor and the tachometer signal, which was rectified, were recorded. These records were relatively insensitive and are used only to illustrate the stability of the system. In these tests the simulator was given initial displacements of as much as 20° on each axis. The simulator was released with as close to zero momentum as was possible and was allowed to seek the reference lights. The simulator would repeatedly return to within ±12 seconds of arc of the null position in pitch and yaw. The motions were well damped, and there were no apparent cross-coupling effects. If, for example, the initial yaw error was smaller than the pitch or roll error, the yaw error would be corrected in the shortest time and would remain unaffected as the corrections for pitch and roll continued.

The uncertainty that would affect the precision of the final pointing accuracy was the uncertainty of the amount of stored momentum in the system. The probable lack of exactly zero momentum at the start of the runs and the momentum added to the system by the unbalance of the table during the time required to make the correction would contribute to a random amount of stored momentum. The final steady-state attitude error is proportional to the random amount of momentum stored in the system.

Tests were also made in which there was some initial momentum deliberately stored on one of the axes in addition to the initial displacements. In these tests one of the wheels was allowed to be spinning at approximately one-half of its maximum speed at the time of release of the simulator. The nature of the response or the stability of the response was not affected by the addition of the stored momentum. The expected exchange of momentum between the wheels required to keep the initial momentum vector fixed in space occurred, and the steady-state error corresponding to the stored momentum was noted in these tests.

The recorded output for a typical run of the yaw light sensor and the wheel angular velocity are shown in figure 11 together with the approximate yaw angle that corresponds to the light-sensor signal. These records show that the motion is well damped. Also shown in figure 11 are similar outputs recorded without tachometer feedback. For a 5° initial displacement approximately 10 seconds were required for the table to return to its null position when feedback was used in the system. Without feedback the system is unstable about the null point.

The magnet system was then added to the simulator, and tests were made to check the operation of the combined system and to illustrate the operation of the magnet in opposing a constant torque applied to the simulator. The operation of the magnet was checked by putting the magnet in the trim mode and having it assume a position alined with the earth's magnetic field. The earth's field was inclined approximately 80° to the horizontal at the test site. This position results in a zero-torque output. With the magnet alined with the earth's magnetic field, it was next put in the operate mode so as to correct the pitch unbalance of the table. The magnet was again put into the trim mode, and the direction of the magnetic field was changed so that it was perpendicular to the Z-axis of the simulator by using an artificial magnetic field generated by a Helmholtz coil. The magnet would orient itself in the new magnetic field, and in this optimum position it was used to balance yaw torques applied to the simulator. The artificial field was required because of the limits to which the table could be tilted.

Typical test results are shown in figure 12. With the magnet in operation, an additional long-period oscillation was present in the system. When a step torque is applied to the simulator, the wheels initially take up the load, opposing the applied torque by accelerating in the appropriate direction, and then the magnet gradually unloads the wheels and they return to nearly zero speed. The applied torque was approximately 41 gram-centimeters in this test. The calculated field strength was 1.25 gauss in the generated field used in this test. The magnet rotated 12° under these conditions. The calculated output of the magnet for this deflection agrees very closely with the measured applied torque. The high gain of the magnet control allows this 12° deflection to be commanded by a very low wheel speed, approximately 200 to 300 rpm, with a correspondingly small attitude error of the table. When the torque is removed the magnet returns to its trim, or zero-torque position, and the yaw wheel returns to a steady-state zero speed. Without the magnet operating, the same applied torque saturates the inertia wheel in less than 1 minute.

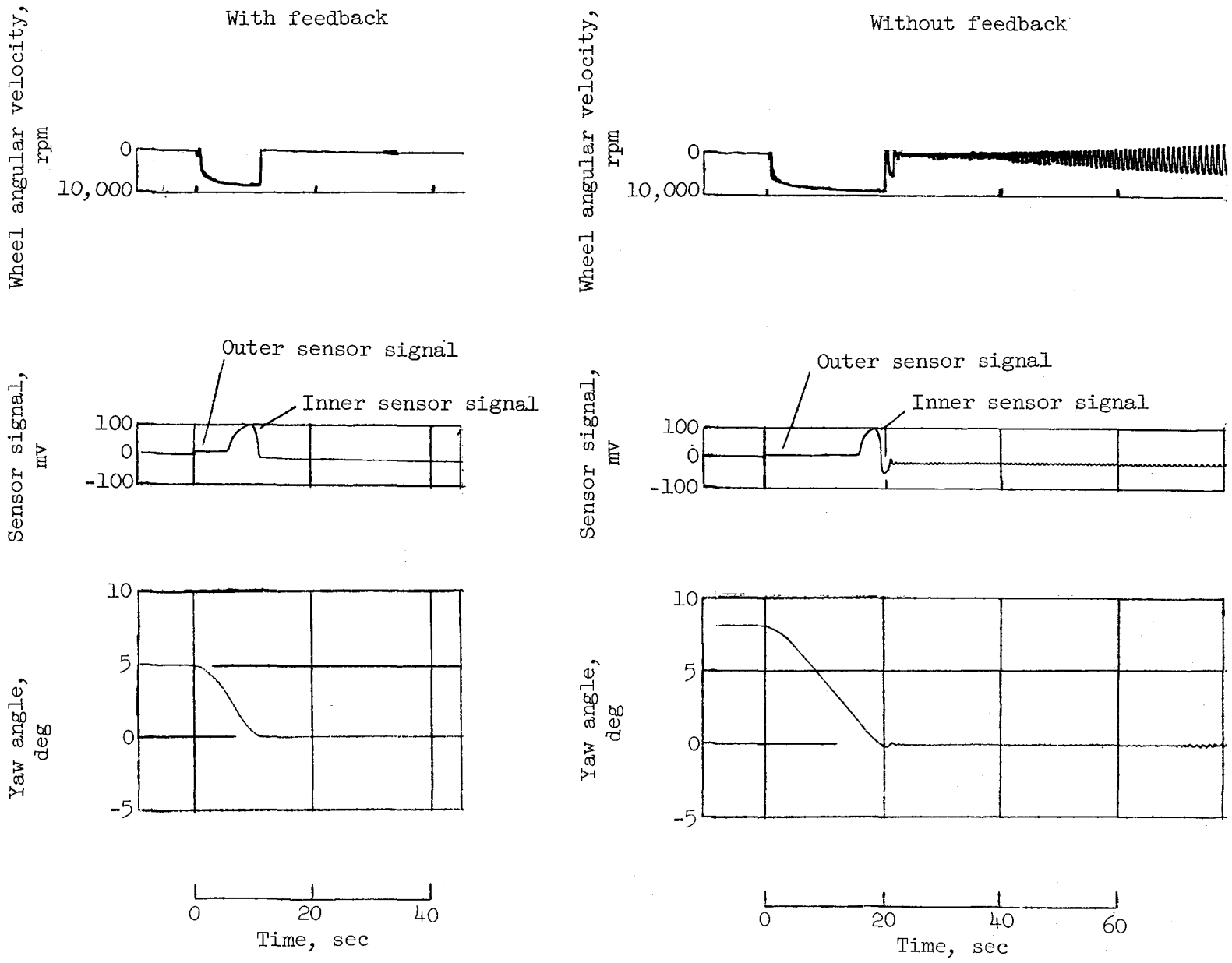

Figure 11.- Response of simulator to initial error.

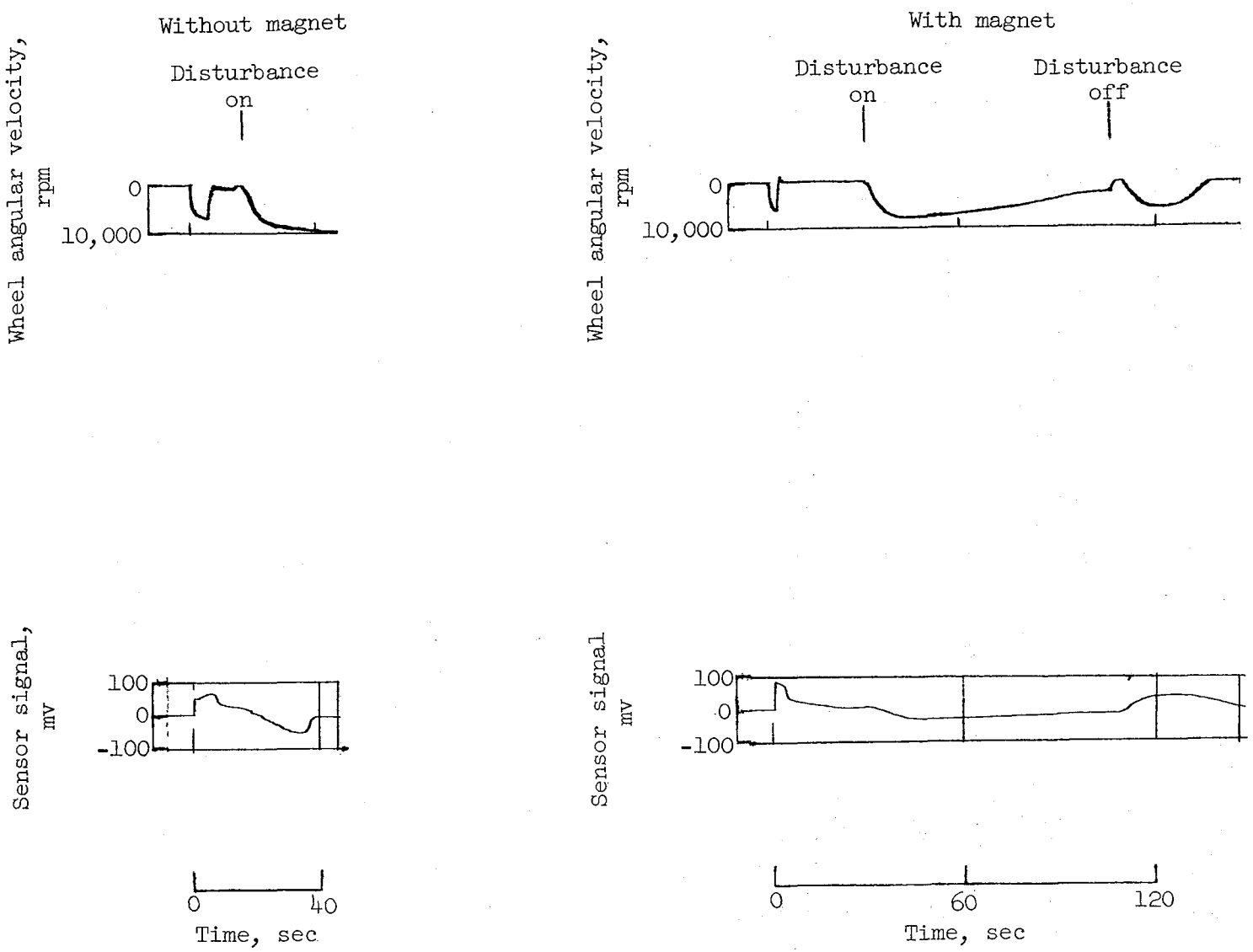

Figure 12.- Response of simulator to step torque disturbance.

CONCLUDING REMARKS

The tests show that very satisfactory dynamic performance of a satellite attitude control system can be achieved with an inertia-wheel torque system controlled by attitude and wheel-angular-velocity signals. The system will inherently contain an attitude error proportional to the momentum stored in the system.

The tests also show that a gimbaled permanent-magnet system consisting essentially of simple logic elements and servomotors to rotate the magnet will satisfactorily remove momentum from the attitude control system.

The combination of these two torque devices could, therefore, provide a suitable attitude control for many applications in which it would be desirable to use electrical power in an attempt to reduce system weight.

Langley Research Center,
National Aeronautics and Space Administration,
Langley Station, Hampton, Va., July 9, 1963.

REFERENCES

1. Adams, James J., and Brissenden, Roy F.: Satellite Attitude Control Using a Combination of Inertia Wheels and a Bar Magnet. NASA TN D-626, 1960.

2. Roberson, Robert E.: Attitude Control of a Satellite Vehicle - An Outline of the Problem. Presented under auspices of American Rocket Soc. at Eighth International Astronautical Congress (Barcelona, Spain), Oct. 6-12, 1957.

3. Haeussermann, Walter: An Attitude Control System for Space Vehicles. [Preprint] 642-58, American Rocket Soc., June 1958.

4. Adams, James J., and Chilton, Robert G.: A Weight Comparison of Several Attitude Controls for Satellites. NASA MEMO 12-30-58L, 1959.

5. White, John S., and Hansen, Q. Marion: Study of Systems Using Inertia Wheels for Precise Attitude Control of a Satellite. NASA TN D-691, 1961.

6. Cannon, Robert H., Jr.: Some Basic Response Relations for Reaction-Wheel Attitude Control. ARS Jour., vol. 32, no. 1, Jan. 1962, pp. 61-74.

7. DeBra, D. B., and Cannon, R. H., Jr.: Momentum Vector Considerations in Wheel-Jet Satellite Control System Design. [Preprint] 1917-61, American Rocket Soc., Aug. 1961.

8. Anon.: Electromagnetic Attitude Control System Study. A95258AY1B, 10483 (Contract No. NAS-5-1728, Air Arm Div., Westinghouse Elec. Corp. (Baltimore, Md.), May 1, 1962.

NASA-Langley, 1963 L-3474