https://ntrs.nasa.gov/search.jsp?R=19650009347 2019-02-24T12:37:32+00:00Z

FIRST QUARTERLY REPORT

NONDISSIPATIVE DC to DC REGULATOR-CONVERTER STUDY

15 June 1964 to 15 September 1964

HC PRICE $ _____
OTS PRICE(S) $ _____
Hard copy (HC) _____
Microfiche (MF) _____

Contract No.: NAS 5-3921

N65-18948

Prepared by

Hamilton Standard DIVISION OF UNITED AIRCRAFT CORPORATION
ELECTRONICS DEPARTMENT BROAD BROOK, CONN.

for

GODDARD SPACE FLIGHT CENTER
Greenbelt, Maryland

FACILITY FORM 602
N65 18948 (ACCESSION NUMBER)
(THRU)
15 (PAGES)
1 (CODE)
CR 57174 (NASA CR OR TMX OR AD NUMBER)
09 (CATEGORY)

HSER 3037

NONDISSIPATIVE DC TO DC

REGULATOR-CONVERTER STUDY

FIRST QUARTERLY REPORT

15 JUNE 1964 to 15 SEPTEMBER 1964

CONTRACT NO.: NAS 5-3921

GODDARD SPACE FLIGHT CENTER

GREENBELT, MARYLAND

Prepared by: R Donner
R. Donner, Design Engineer

Approved by: E Levy
E. Levy, Sr. Project Engineer

UNITED AIRCRAFT CORPORATION
HAMILTON STANDARD DIVISION
BROAD BROOK, CONNECTICUT

TABLE OF CONTENTS

Section		Page
I.	ABSTRACT	ii
II.	PURPOSE	1
III.	INTRODUCTION	2
IV.	TECHNICAL DISCUSSION	3
	A. Literature Search	3
	B. Classification of Power Stages	12
	C. Criteria for Selection of Circuitry	14
	D. Comparison of Power Stages	15
	E. Duty Ratio Requirements	18
	F. Power Stage Drive Considerations	21
	G. Materials Investigation	23
	a. Available Power Semiconductors	23
	b. Usable Frequency Range of Semiconductors	23
	c. Available Magnetic Materials	32
	H. Power Source and Load Considerations	34
V.	CONCLUSIONS AND RECOMMENDATIONS	38
VI.	PROGRAM FOR NEXT INTERVAL	39
VII.	BIBLIOGRAPHY	40
VIII.	CONFERENCES	43
IX.	NEW TECHNOLOGY	43

LIST OF ILLUSTRATIONS

Table		Page
1.	Classification of Power Stages into Basic Types	13
2.	Presently-Available High-Frequency Power Transistors	24
3.	Presently-Available High-Speed Rectifiers	25
4.	2N2880 Parameters	26
5.	2N1908X (Assumed) Parameters	27
6.	2N2880 Dissipation vs. Frequency	27
7.	2N1908X Dissipation vs. Frequency	28
8.	Relative Characteristics of Core Materials for Specific Frequency Ranges	34

Figure		Page
1.	Bedford Step-up	3
2.	Self-Stabilizing Chopper	4
3.	Pulse-width Modulated Power Supply	4
4.	Simplified Two-State Modulator	5
5.	Blocking Oscillator Regulator	6
6.	Low Frequency Pulse Generator	6
7.	Monostable Regulator	7
8.	Capacitive Doubler	8
9.	Capacitive Divider	8
10.	Hybrid Booster-Converter	9

(Continued)

Figure		Page
11.	Booster Converter	9
12.	Sliding Square-wave Converter	10
13.	One-step Converter	11
14.	Representative Basic Power Stages	16
15.	Power Stage Comparison Chart	19
16.	Drive Waveshaping Networks	22
17.	Switching Model	26
18.	Transistor Efficiency vs. Frequency	29
19.	Operation of Typical Battery-Solar Array System	35
20.	Chopper Block Diagram	37

N65 18948

18948

I. ABSTRACT

This report encompasses the study effort of the first quarterly period. This effort includes:

1. A literature search for all known transistorized concepts of DC to DC conversion.

2. A classification of all known concepts into five basic types of converters.

3. A selection of the basic concept to be used for further study.

4. An examination of duty ratio and power stage drive considerations.

5. A preliminary investigation of power source and load considerations.

6. A search of vendor literature for applicable high-speed transistors and rectifiers.

7. A preliminary investigation of applicable magnetic materials.

The basic circuits chosen for further study are the push-pull chopper and the push-pull inverter-rectifier. The most promising mechanization appears to be a combination of pulse and frequency modulation, where pulse width is automatically set by the input voltage, and frequency is varied as a function of load.

A broad selection of power transistors is available, and the selection of high-speed rectifiers seems adequate. From a transistor efficiency viewpoint, the upper frequency of operation for the study is limited to 20-30 KCPS because of duty cycle restictions.

Toroidal and tape-wound bobbin cores are available to cover the frequency range of 0.5-200 KCPS, but sufficient data has not yet been compiled to evaluate the magnetic materials in a quantitative manner.

Power source and load considerations were examined briefly. The variation of pulse width as an inverse function of input voltage allows the power stage and output filter to suppress the specified input variations. The stability of the system against step load changes is yet to be determined.

author

II. PURPOSE

The purpose of this program is to provide concepts, techniques, and developed modular circuitry for non-dissipative DC to DC converters in the power range of 0 to 100 watts.

Major program goals are the maximization of efficiency, simplicity, and reliability, along with minimization of size, weight, and response times of the converters.

The circuits are to be modular in concept, so that a minimum of development is required to tailor a circuit to a specific application requirement. The concepts should also allow, inasmuch as practical, for the use of state-of-the-art manufacturing techniques.

The program is a two-phase program, including a study, analysis, and design phase, and a breadboard phase during which the concepts are to be verified by construction and test of eight breadboards.

III. INTRODUCTION

During the first quarterly period the major portion of the effort centered on literature searches, materials investigations, and general formulation of concepts.

Although several basic items, such as stability analysis and magnetic component detailed comparisons, are yet unfinished, it is felt that the program has progressed to the point where specific circuit concepts can soon be generated and examined. This work will be initiated during the second quarterly period.

IV. TECHNICAL DISCUSSION

During the first quarterly period, the areas of effort included:

A. Literature Search

B. Classification of Power Stages

C. Criteria for Selection of Circuitry

D. Comparison of Power Stages

E. Duty Ratio Requirements

F. Power Stage Drive Considerations

G. Materials Investigation

a. Available Power Semiconductors
b. Usable Frequency Range of Semiconductors
c. Available Magnetic Materials

H. Power Source Considerations

A. Literature Search

An extensive literature search was performed, which disclosed the circuits discussed below. Several of these circuits are not applicable to this study, being either non-regulated or limited to the use of SCR's, but are included for the sake of completeness. There are other composite circuits which consist of several basic circuits connected in cascade, for example. However, the function of these composite circuits can be accomplished by the basic circuits given.

Bedford Step-up (1,2)

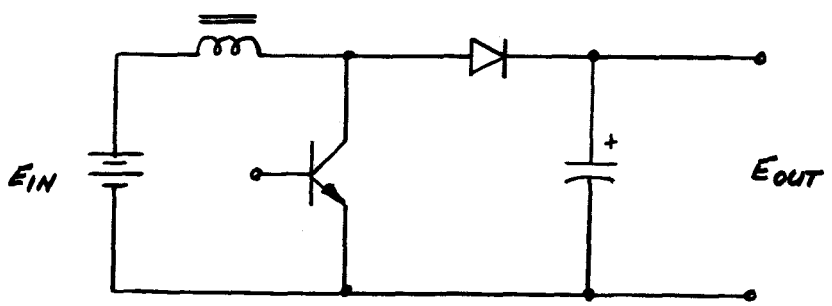

Figure 1. Bedford Step-up

Developed by General Electric Company for use in DC boost applications, this circuit is commonly referred to as the "Flyback".

If the transistor is turned off, DC current flows directly to the load. If the transistor is alternately turned on and off, the choke stores energy during the "on" time and discharges into the load during "off" time. The choke's discharge voltage is added to the source voltage so that a boosting action occurs.

(18)

Self-Stabilizing Chopper

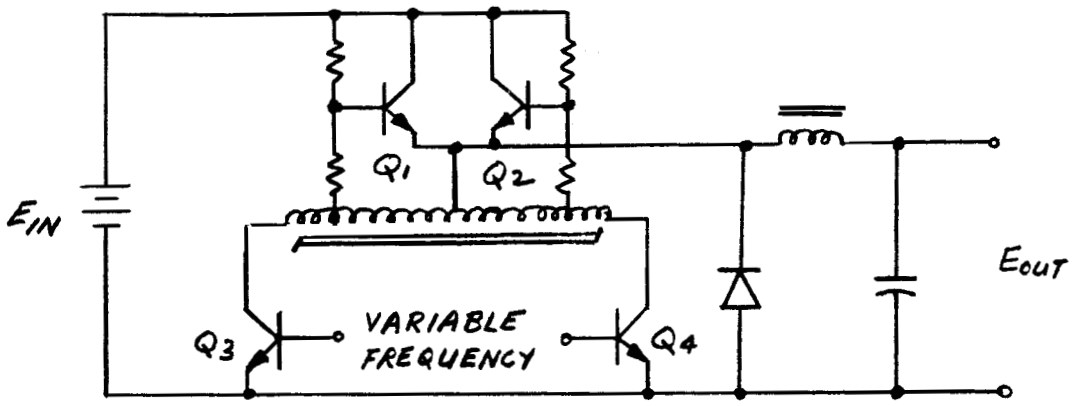

Figure 2. Self-Stabilizing Chopper

Suggested by Powell of HSED, the drive transformer is designed so that Ein min Xt = K. If Q4 is turned on, Q1 is driven on by transformer action. When the transformer saturates, Q1's drive ceases and Q1 turns off. Nothing further happens until Q3 is turned on, which resets the transformer and supplies drive for Q2. The transformer thus produces a pulse width inversely proportional to the input voltage, and the variable drive frequency supplies a controlled dwell time.

The circuit is inherently short circuit proof since Q1 and Q2 are supplied with fixed drive and regeneration cannot occur under short circuit conditions.

(3)

Pulse Width Modulated Power Supply

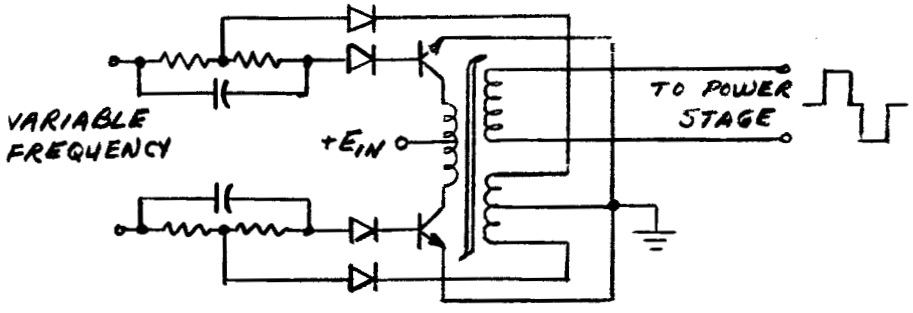

(Reprinted with permission from ELECTRONICS, Feb.23,1962
Copyright McGraw-Hill, Inc. 1962)

Figure 3. Pulse-Width Modulated Power Supply

This unit, designed by Lockheed Missiles and Space Co., uses essentially the same mechanism as the Self-Stabilizing Chopper, except that an output transformer and rectifiers convert it to an inverter-rectifier circuit. The constant volt-second transformer is used as a drive transformer, and a "turnoff winding" is added. This winding serves to shunt the drive transistor's base signals to ground when the transformer saturates, thus preventing the drive transistors from delivering current into a short circuit. The circuit also uses load current feedback in the power stage. (4,8)

Two-State Modulation System

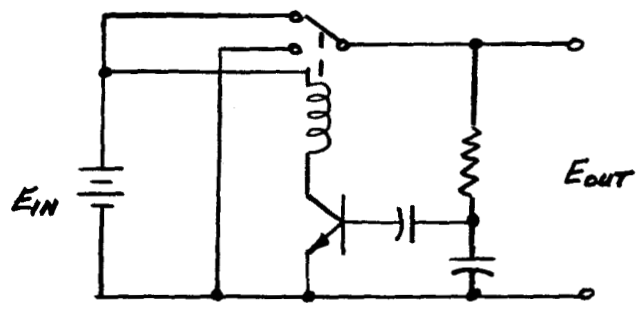

Figure 4. Simplified Two-State Modulator

This concept, described by Bose (4) of MIT, and Rosenthal (8) of the University of California, is a self-oscillating system which is quite interesting because of its simplicity. A simple mechanization uses a relay with one contact grounded and the other contact connected to B+. The swinger is connected to an RC network such that the capacitor voltage is an exponential charge-discharge waveform with respect to ground. This waveform is AC coupled to the base of a transistor, the collector load of which is the relay coil.

If the swinger contacts the B+ contact, the capacitor charges and drives the transistor on. When the transistor's collector current exceeds the coil's pull-in current, the relay energizes and moves the swinger to the grounded contact. The capacitor then discharges, turning the transistor off. When collector current decreases below the relay coil's drop-out value, the relay de-energizes and the swinger jumps to the B+ contact, repeating the cycle. The output waveform taken from the swinger to ground, is a modulated square wave.

The modulation is pulse-width for duty cycles near 100%, and approached pulse-frequency with fixed ON time for decreasing duty cycle.

Bose (4) describes a 15 watt regulator, using three transistors, which exhibits 60db attenuation of input variations and 0.14% regulation for a 50% load change.

Unijunction Transistor Multivibrator (6)

This circuit, by General Electric Co., uses a unijunction transistor, a capacitor, three resistors, and a diode to generate a rectangular waveform, the relative ON and OFF times of which may be varied by choice of resistors.

Pulse Ratio Modulator (5)

This modulator, described by Schaefer, in its most basic form uses the unijunction multivibrator circuit with two resistors replaced by a differential amplifier. The ON and OFF times may be linearly controlled by signals applied to the differential amplifier.

Blocking Oscillator Regulator (7,10)

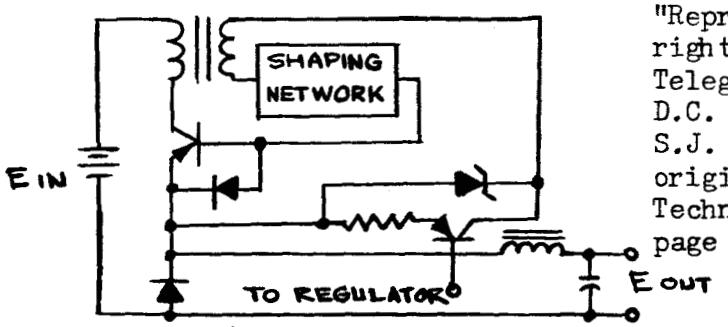

"Reprinted by permission of the copyright owner, American Telephone and Telegraph Company, and the authors, D.C. Bomberger, D. Feldman, D.E. Trucksess S.J. Brolin and P.W. Ussery. This article originally appeared in the Bell System Technical Journal, vol. 42, July 1963, page 963."

Figure 5. Blocking Oscillator Regulator

This regulator, designed for the Telstar power system is basically a chopper regulator with blocking oscillator drive for the switching transistor. Regulation is accomplished by controlling the reset time of the drive transformer.

FM-SS Modulator (9)

This concept, developed for AC to DC conversion, uses "active filtering" to minimize the size and weight of the input AC filter. It is an SCR design with peculiarities which preclude the use of transistors. Basically, it is a series inverter incorporating a series capacitor which is charged by one SCR and discharged by another in such a fashion that the output transformer sees bidirectional current flow.

Low Frequency Pulse Generator (11)

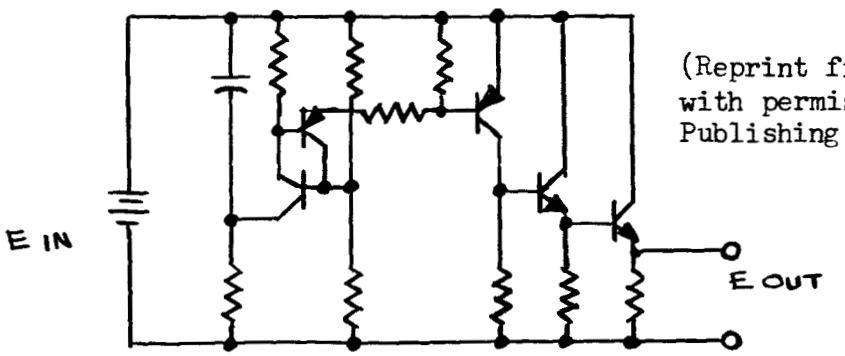

(Reprint from EEE, June 1963 with permission of Mactier Publishing Corp.)

Figure 6. Low Frequency Pulse Generator

This circuit is applicable to a single-ended chopper regulator. It uses two transistors, four resistors and a capacitor, and is basically a unijunction relaxation oscillator similar to those described by General Electric Co.[6] and Schaefer[5], in an unregulated configuration.

Monostable Regulator[12]

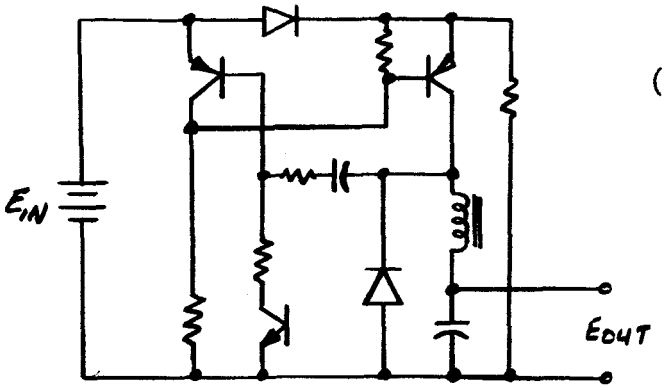

(Reprinted from ELECTRICAL DESIGN NEWS, June 1964 with permission of Rogers Publishing Co., Inc.)

Figure 7. Monostable Regulator

This circuit uses two transistors connected in a monostable circuit. One is a chopper transistor. A third transistor is used as a variable impedance to control the chopper transistor's OFF time by modulating the charging of the commutating capacitor.

Unregulated Low Voltage Converter[14]

This circuit, described by Driebach[14] is an unregulated booster circuit. Regeneration is provided by a saturating transformer, and the unique feature is that the output current is the base current of the switching transistors. The output voltage is approximately equal to the input voltage plus half of the emitter-base reverse voltage.

Unsymmetrical Low Voltage Converter[15]

This circuit, developed by the US Army Electronics R & D Laboratory for low-voltage thermionic diode sources, is an unregulated blocking oscillator wherein the output is transformer coupled to a capacitive filter.

Low Voltage Converter[16]

This unit, developed by Minneapolis-Honeywell is an unregulated push-pull inverter with current feedback. The output is rectified by SCR's in a phase-controlled fashion.

Chopper Regulator[22]

This circuit, also developed by Minneapolis-Honeywell, is a portion of a low voltage converter. The regulator is a fairly straightforward single-ended chopper, with the unique feature, described by Loucks[23] of an additional inductor connected between the switching transistor and the free-wheeling diode. The inductor serves to decrease switching dissipation in the transistor by absorbing energy at the time of turn-on. At turn-off, the energy is returned to the source via a spillover-winding and diode.

(24)

Capacitive Doubler

This circuit, developed by Aerospace Research, Inc., charges two capacitors in parallel and discharges them in series, thus effectively doubling the input voltage.

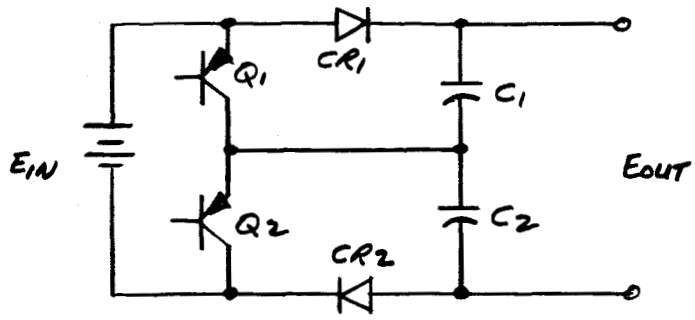

Figure 8. Capacitive Doubler

If Q1 is turned on, C2 charges to Ein through Q1 and CR2. If Q2 is turned on, C1 charges to Ein through Q2 and CR1. The output voltage is thus equal to 2 Ein.

(24)

Capacitive Divider

This circuit, also designed by Aerospace Research, Inc., charges two capacitors in series and discharges them in parallel.

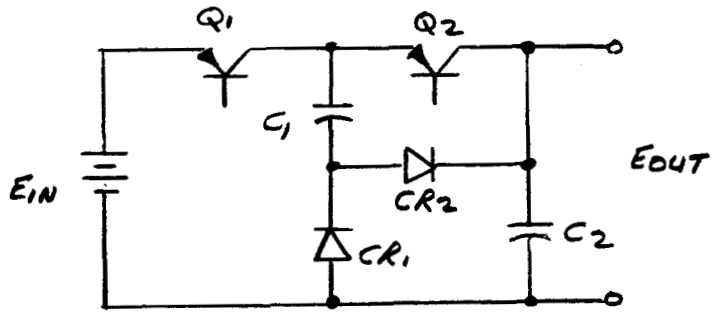

Figure 9. Capacitive Divider

If Q1 is on, Q2 is off, and C1 and C2 charge to Ein/2 through Q1 and CR2. When Q1 is turned off and Q2 on, C2 discharges directly into the load in parallel with the string consisting of C1, CR1, and Q2.

(19)

Hybrid Booster-Converter

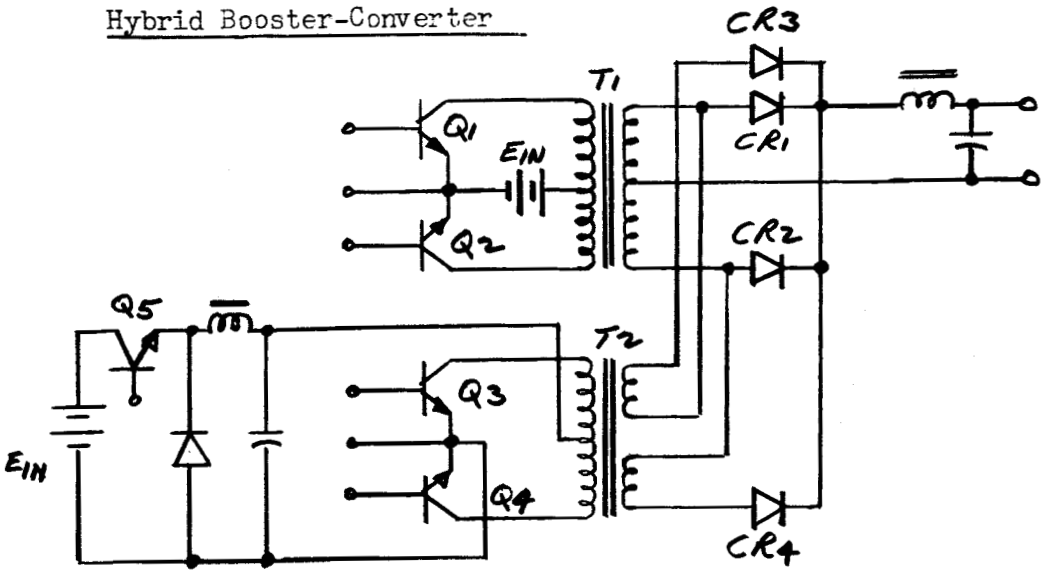

Figure 10. Hybrid Booster-Converter

This approach, developed by Engineered Magnetics, is a composite circuit which functions as a booster and provides DC isolation.

Q1 and Q2, and T1, CR1 and CR2 comprise an unregulated inverter-rectifier which handles the main power. Q3 and Q4, and T2, CR3 and CR4 comprise an inverter-rectifier which handles only the makeup power. The supply voltage for the makeup is furnished by Q5, a DC regulator operating in the switched mode. Closed loop regulation allows variation of the output voltage of the DC regulator, which in turn varies the peak voltage of T2's secondaries and thus, the average DC output of the system. The output of the rectifiers is thus a straight DC output with an amplitude-modulated DC voltage superimposed.

(20)

Booster-Converter

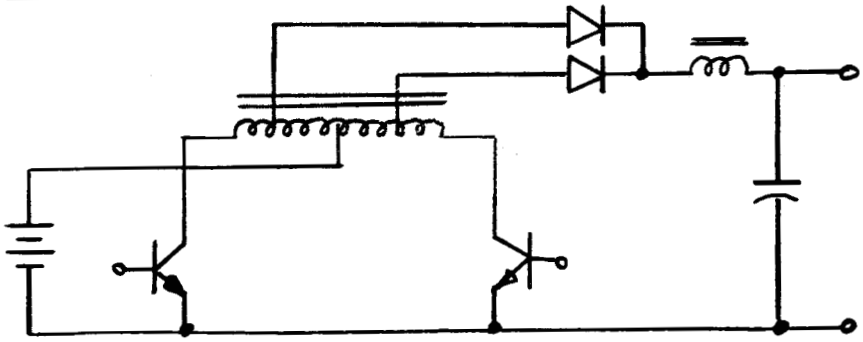

Figure 11. Booster-Converter

In this circuit, a continuous path for DC current is provided from the source through the output transformer and rectifiers. No free-wheeling diode is required, because of the continuous character of the choke's input.

The inverter portion is required to handle only the make-up power, that is, (Eout-Ein) x Iout. The output voltage of the rectifiers is a DC voltage with duty-ratio-modulated positive pulses superimposed.

(21)

Sliding Square-Wave Converter

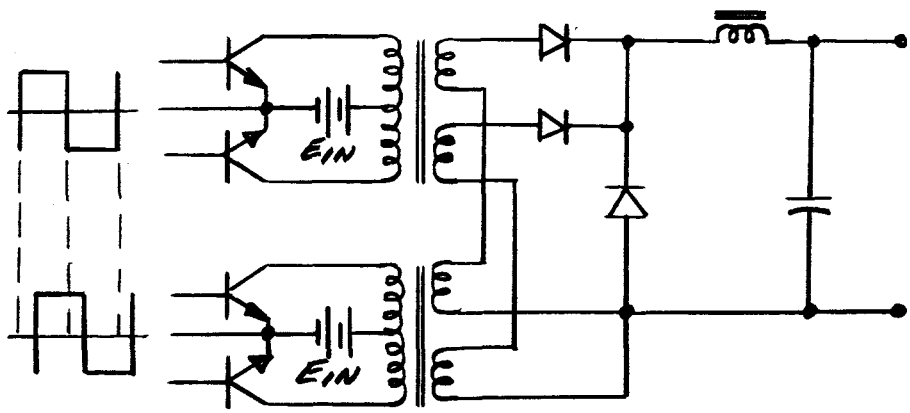

a. ZERO CLAMP

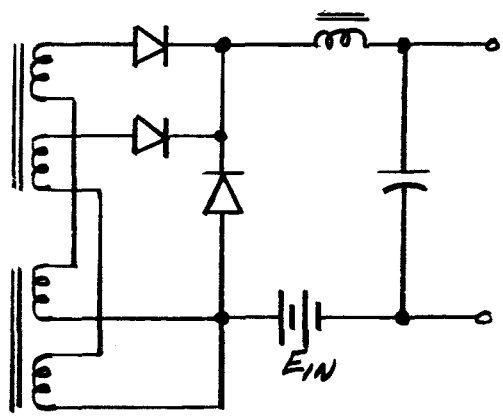

b. POSITIVE CLAMP

Figure 12. Sliding Square-Wave Converter

This concept uses two unregulated square wave inverters with their output transformer secondary windings connected in series. Regulation is accomplished by delaying the phase of one inverter relative to the other. If the inverters are exactly in phase, the output voltage is a square wave. If the phases are 180° apart, the output is zero. In between, the waveshape is that of a pulse-width modulated square wave where half the dwell angle is equal to the phase displacement between the inverters.

The upper diagram shows a connection wherein all the power is transformed and rectified. The lower sketch shows the output transformers adding to the input voltage, so that, in this connection, the system is operated as a booster-converter and the inverters handle only the makeup power.

(34)

One-Step Converter

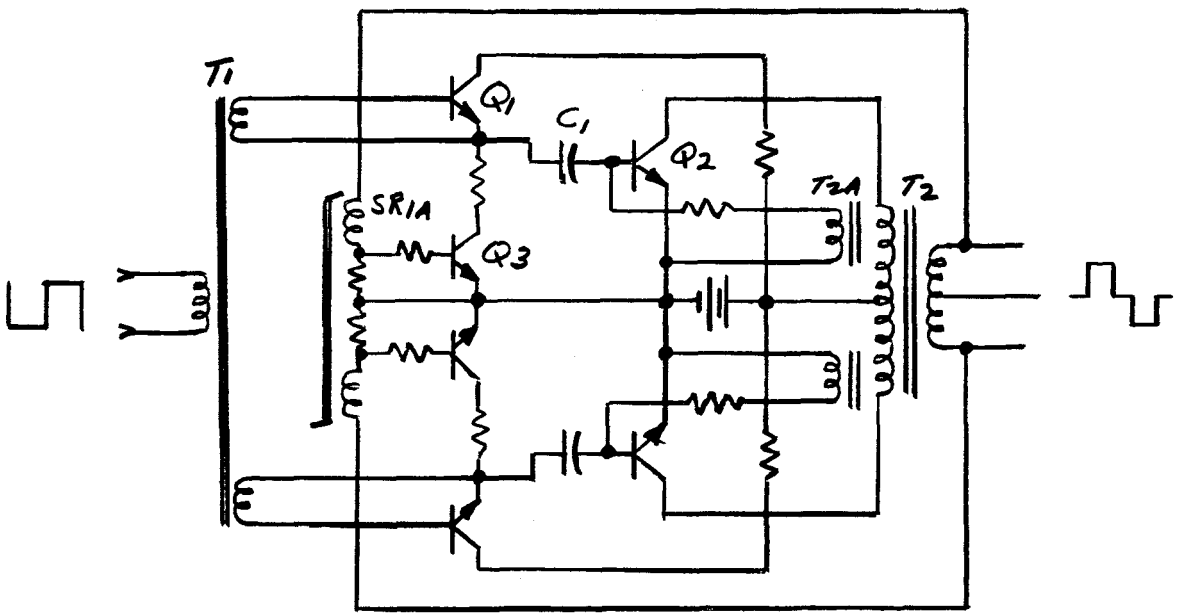

(Reprinted from ELECTRONIC PRODUCTS, September 1964 with permission of Tech Publishers, Inc.)

Figure 13. One-Step Converter

Developed by General Electric Company, the operation of this circuit is somewhat similar to that of a triggered Jensen circuit.

Transistor Q1 is turned on by the square wave oscillator, via T1, and a turn-on pulse is coupled through C1 to Q2, thus triggering Q2. As Q2 comes on, T2 supports voltage and Q2 is held on by a relatively low feedback voltage from T2A, while C1 charges and therefore removes the turn-on pulse. After some time, dependent upon the amplitude of the applied voltage, saturable reactor SR1A will saturate and Q3 will switch on, discharging C1 and hence driving Q2 into cutoff with a negative spike. When the oscillator's polarity reverses, the other half of the push-pull arrangement operates in the same manner.

Thus SR1, with its fixed volt-time product, fixes the ON time as a function of input voltage. The frequency of the oscillator is varied as a function of output voltage. The resultant T2 waveshape is quasi-square, and the type of modulation is a mixture of pulse width and pulse-frequency.

B. Classification of Power Stages

The literature search has revealed only five basic, non-dissipative, switching-type regulator-converters. They are:

a) Chopper Regulator
b) Capacitive Divider
c) Bedford Step-up
d) Capacitive Doubler
e) Inverter-rectifier

The first two are "buck" systems, the second two are "boost" systems, and the last may be either.

Of these five basic types, a number of variations exist. The most obvious variation is the push-pull connection. In general, the other variations differ only in drive circuitry and the means of controlling the output duty cycle. The only known exception to this statement is the use of the "positive clamp" which changes the inverter-rectifier to the booster and hence modifies the circuits function.

There are also many other variations which use a combination of basic circuits. An example is the use of a chopper regulator to supply an unregulated inverter-rectifier and in this manner maintain a regulated output voltage. In general, these variations are more complex and inherently less efficient than the basic types and so are not considered here.

All of the applicable transistorized, regulated, power state circuits discussed in the literature search may be classified according to the five basic types as follows:

TABLE 1

CLASSIFICATION OF POWER STAGES INTO BASIC TYPES

BASIC TYPE	SINGLE-ENDED	PUSH-PULL
Chopper Regulator	Two-State Modulator (4,8) Telstar Blocking Oscillator (7,10) Low Frequency Pulse Generator (11) Monostable Regulator (12) Chopper Regulator (22)	Self-Stabilizing Chopper (18)
↓		
Capacitive Divider	Capacitive Divider (24)	None
Capacitive Doubler	Capacitive Doubler (24)	None
Bedford Step-up	Bedford Step-up (1,2)	None
Inverter-rectifier	Unsymmetrical Low Voltage Converter (15)	Pulse-width Modulated Power Supply (3) Improved Booster-Converter (20) Sliding Square-Wave Converter (21) One-step Converter (34)
↓		

C. Criteria for Selection of Circuitry

1. Degree of commonability of circuitry for "buck" or "boost" application. This is a rather subjective item to evaluate, however, the following definitions will be used:

Commonability exists only if the same circuit arrangment can be used for either operation. The inverter-rectifier, for example, can be made to buck or boost merely by changing a transformer ratio. The chopper and the Bedford Step-up have no commonability, even though the components used in each may be identical, because they require a change of arrangement to go from one function to the other.

The weighting factor for this item is 5, and the rating may vary from zero to 5, where 5 is the minimum degree of commonability.

2. Number of magnetic components. The weighting factor is 3, and each magnetic component is rated as 2.5.

3. Number of components. Each component is rated at 0.5, and the weighting factor is 5.

4. Efficiency. This rating is based upon the maximum efficiencies which have been reported for the various approaches. Efficiency ratings are:

a) near 95%, 1
b) near 90%, 2
c) near 85%, 3
d) near 80%, 4
e) near 75%, 5

The weighting factor is 4.

5. Input ripple current. This is rated on the relative degree of filtering required to smooth the input. The maximum is 5, minimum is 0. The weighting factor is 2.

6. Output ripple voltage. Circuits with LC filters are rated 2.5, and capacitive filters at 5. The weighting factor is 5.

7. Overload/short circuit protection. Ratings are:

a) circuits which do not have a series element capable of being "opened" so as to isolate the source from the load fault are rated at 5.
b) circuits which have elements capable of being "opened", but where current must be sensed on a DC basis (resistor sensing) are rated at 2.5.
c) circuits of category b) where sensing can be done on an AC basis (current transformer) are rated at 0.

The weighting factor is 5.

8. Minimum size and weight. Each magnetic component is rated at 1, and each resistor, capacitor, or semiconductor at 0.5. The weighting factor is 3.

9. Isolation of input-output grounds. Transformer-coupled circuits are rated at 0, and those without isolation at 5. The weighting factor is 2.

Two additional criteria, that of output voltage regulation and dynamic regulation recovery time, initially appeared in the above list but have been deleted on the basis that these items are determined by the control circuitry rather than the basic power stage.

The selection criteria and weighting factors thus serve to penalize those ciruits which have the highest valued summation of rating and weighting factor products.

D. Comparison of Power Stages

Figure 14 shows eight power stages, which represent the simplest configuration capable of performing the necessary functions.

In comparing these circuits, the assemptions were made that the power stages were independent of drive and control circuitry, and that all circuits are operated at the same repetition rate. This means that the ripple components of the push-pull stages will be at twice the frequency of those of the single ended stages and consequently easier to filter.

A. Single-ended Chopper

1. Commonality - one. Rating = 5
2. Magnetic components - one. Rating = 2.5
3. Components - four. Rating = 2
4. Efficiency - near 92%, but DC current sensing will reduce this to about 90%. Rating = 2
5. Input ripple current - high. Rating = 5
6. Output ripple voltage - LC filter. Rating = 2.5
7. Protection - series element with DC sensing. Rating = 2.5
8. Size and weight - one magnetic and three other components. Rating = 2.5
9. Isolation - none. Rating = 5

B. Push-pull Chopper

1. Commonality - none. Rating = 5
2. Magnetic components - one. Rating = 2.5
3. Components - five. Rating = 2.5
4. Efficiency - near 92%. Rating = 2
5. Input ripple current - twice the frequency of the single-ended unit. Rating = 2.5
6. Output ripple voltage - LC filter. Rating = 2.5
7. Protection - series element with AC sensing. Rating = 0
8. Size and weight - one magnetic and four other components. Rating = 3
9. Isolation - none. Rating = 5

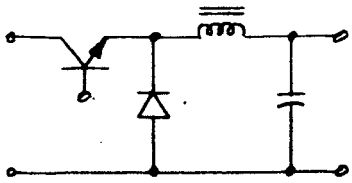

Single-Ended Chopper

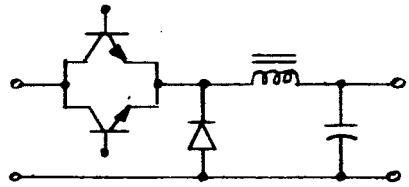

Push-Pull Chopper

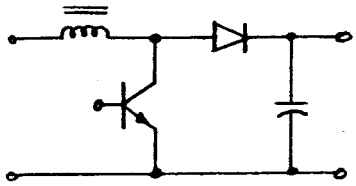

Bedford Step-Up

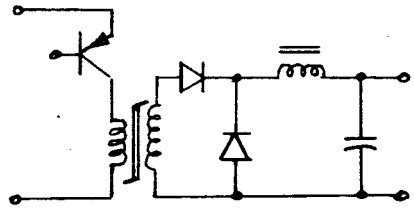

Single - Ended
Inverter - Rectifier

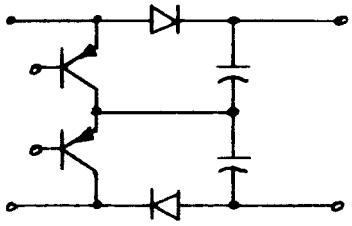

Capacitive Doubler

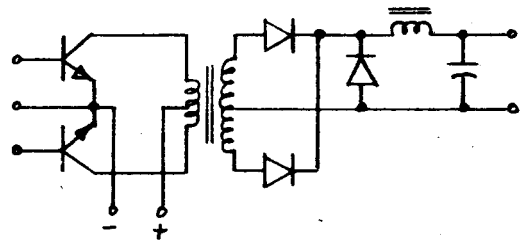

Push-Pull Inverter Rectifier.

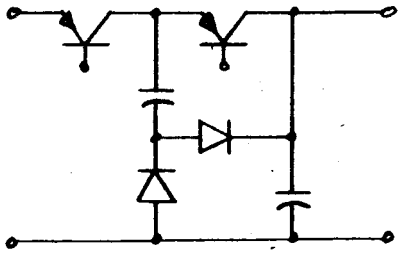

Capacitive Divider

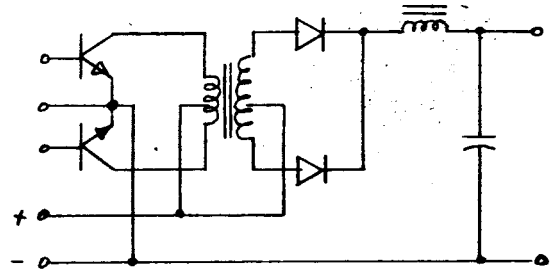

Push-Pull Booster

FIGURE 14

REPRESENTATIVE BASIC POWER STAGES

C. Bedford Step-up

1. Commonality - none. Rating = 5
2. Magnetic components - one. Rating = 2.5
3. Components - four. Rating = 2
4. Efficiency - 95%. Rating = 1
5. Input ripple current - high. Rating = 5
6. Output ripple voltage - capacitive filter. Rating = 5
7. Protection - circuit cannot be protected without additional series element. Rating = 5
8. Size and weight - one magnetic and three other components. Rating = 5
9. Isolation - none. Rating = 5

D. Single-ended Inverter-rectifier

1. Commonality - yes. Rating = 0
2. Magnetic components - two. Rating = 5
3. Components - two magnetic and four other components. Rating = 3
4. Efficiency - 80 to 85%, but DC current sensing will limit it to about 80%. Rating = 4
5. Input ripple current - high. Rating = 5
6. Output ripple voltage - LC filter. Rating = 2.5
7. Protection - series element with DC sensing. Rating = 2.5
8. Size and weight - two magnetics and four other components. Rating = 4
9. Isolation - yes. Rating = 0

E. Push-pull Inverter-rectifier

1. Commonality - yes. Rating = 0
2. Magnetic components - two. Rating = 5
3. Components - eight. Rating = 4
4. Efficiency - 85%. Rating = 3
5. Input ripple current - twice the frequency of that of single-ended unit. Rating = 2.5
6. Output ripple voltage - LC filter. Rating = 2.5
7. Protection - series element and AC sensing. Rating = 0
8. Size and weight - two magnetic and six other components. Rating = 5
9. Isolation - yes. Rating = 0

F. Push-pull Booster

1. Commonality - deletion of the output potential clamp and change of transformer ratio will allow this unit to "buck". Rating = 2.5
2. Magnetic components - two. Rating = 5
3. Components - seven. Rating = 3.5
4. Efficiency - varies according to the degree of boost. Average about 90%. Rating = 2
5. Input ripple current - varies depending on the degree of boost, but is better than conventional push-pull because of continuous DC content. Rating = 1
6. Output ripple voltage - LC filter. Rating = 2.5

7. Protection - circuit cannot be protected without additional series element. Rating = 5
8. Size and weight - two magnetics and five other components. Rating = 4.5
9. Isolation - none. Rating = 5

G. Capacitive Doubler

1. Commonality - none. Rating = 5
2. Magnetic components - none. Rating = 0
3. Components - six. Rating = 3
4. Efficiency - near 90% unregulated, probably will decrease to 80-85% with regulation. Rating = 3
5. Input ripple current - high. Rating = 5
6. Output ripple voltage - capacitive filter. Rating = 5
7. Protection - series element with DC sensing. Rating = 2.5
8. Size and weight - six non-magnetic components, however, the capacitors are quite large and will be rated as if they were magnetic components. Rating = 4
9. Isolation - none. Rating = 5

H. Capacitive Divider

1. Commonality - none. Rating = 5
2. Magnetic components - none. Rating = 0
3. Components - six. Rating = 3
4. Efficiency - no experimental data available, however, it would appear to be about equal to that of the Capacitive Doubler. Rating = 5
5. Input ripple current - high. Rating = 5
6. Output ripple voltage - capacitive filter. Rating = 5
7. Protection - series element with DC sensing. Rating = 2.5
8. Size and weight - six non-magnetic components. However, excessive capacitance is required, so the capacitors will be rated as magnetics. Rating = 4
9. Isolation - none. Rating = 5

Figure 15 is a comparison chart which shows the selector criteria, the ratings, weighting factors, and sub-totals for each power stage. The bottom line is the summation for each circuit, which indicates the relative capability of each circuit to meet the overall specification requirements and goals. On this basis, the circuits which were selected for further consideration are the push-pull chopper, and the single-ended and push-pull Inverter-rectifiers.

E. Duty Ratio Requirements

Sorenson (13) presents a very descriptive discussion of the various means of modulation, using switching techniques, in which he discusses the characteristics of Pulse-width, Pulse Ratio, and two types of Pulse-frequency modulation.

CRITERION	SINGLE-ENDED CHOPPER			PUSH-PULL CHOPPER			BEDFORD STEP-UP			SINGLE-ENDED INVERTER-RECTIF.			PUSH-PULL INVERTER-RECTIF.			PUSH-PULL BOOSTER			CAPACITIVE DOUBLER			CAPACITIVE DIVIDER		
	RAT.	x Wf	= SUB-TOTAL	RAT.	x Wf	= SUB-TOTAL	RAT.	x Wf	= SUB-TOTAL	RAT.	x Wf	= SUB-TOTAL	RAT.	x Wf	= SUB-TOTAL	RAT.	x Wf	= SUB-TOTAL	RAT.	x Wf	= SUB-TOTAL	RAT.	x Wf	= SUB-TOTAL
COMMONALITY OF CIRCUITRY	5	5	25	5	5	25	5	5	25	0	5	0	0	5	0	2.5	5	12.5	5	5	25	5	5	25
NO. OF MAGNETICS	2.5	3	7.5	2.5	3	7.5	2.5	3	7.5	5	3	15	5	3	15	5	3	15	0	3	0	0	3	0
NO. OF COMPONENTS	2	5	10	2.5	5	12.5	2	5	10	3	5	15	4	5	20	3.5	5	17.5	3	5	15	3	5	15
EFFICIENCY	2	4	8	2	4	8	1	4	4	4	4	16	3	4	12	2	4	8	3	4	12	3	4	12
INPUT RIPPLE CURRENT	5	2	10	2.5	2	5	5	2	10	5	2	10	2.5	2	5	1	2	2	5	2	10	5	2	10
OUTPUT RIPPLE VOLTAGE	2.5	5	12.5	2.5	5	12.5	5	5	25	2.5	5	12.5	2.5	5	12.5	2.5	5	12.5	5	5	25	5	5	25
OVERLOAD/S.CKT. PROTECTION	2.5	5	12.5	0	5	0	5	5	25	2.5	5	12.5	0	5	0	5	5	25	2.5	5	12.5	2.5	5	12.5
SIZE & WEIGHT	2.5	3	7.5	3	3	9	2.5	3	7.5	4	3	12	5	3	15	4.5	3	13.5	4	3	12	4	3	12
ISOLATION	5	2	10	5	2	10	5	2	10	0	2	0	0	2	0	5	2	10	5	2	10	5	2	10
			103.0			89.5			124.0			93.0			79.5			116.0			121.5			121.5

FIGURE 15. POWER STAGE COMPARISON CHART

Several important points can be taken from his discussion:

a) Some controllers inherently have minimum ON or OFF times.

b) In modulation systems in which the frequency varies, the output low-pass filter must be designed for the lowest frequency.

c) If either the ON or OFF time approaches zero, the bandwidth of the controller must approach infinity.

The first point may be seen in, for example, the monostable multivibrator, which has a minimum recovery, or OFF, time. The second point, obviously, implies that the filter for a given regulator will be smallest for a pulse-width modulated system, since its frequency is fixed. The third point has several implications. First, the design of the controller is more severe. Second, since the gain-bandwidth product of any physically-relaizable controller is limited, this means that the regulation of the device suffers because of decreasing gain, and the controller may tend to be unstable.

Assuming no transformer scaling, Regulator B must produce 9 volts from a 10-20 volt source. Allowing for a 1 volt series drop, the duty ratio must vary from 100% down to about 45%. Likewise, Regulator G must produce 35 volts from a 22-33 volt source, with a duty ratio varying from about 40% to 5%. If transformer scaling is used, the turns ratio may be adjusted for, say, a step-up of 1.15, which shifts the duty ratio of Regulator B to a range of 87% to 39%, thus decreasing the severity of the bandwidth requirement.

Another means of bypassing points a) and c) above is the use of two modulating functions simultaneously, as in either the Pulse Width Modulated Power Supply[3] or the Self-Stabilizing Chopper[18]. Here a constant volt-second transformer establishes the ON time and varies the duty ratio as a function of input voltage, while a separate bistable multibrator, operating over a relatively narrow range of frequencies, furnishes the necessary OFF time to compensate for load changes. In the limiting case of near 100% duty cycle, the transformer is operating close to its normal 180° saturated switching mode, and the multibrator is operating close to its design frequency.

It should be noted that, since the lowpass output filters are LC with free-wheeling diodes, it is advantageous, from an efficiency viewpoint, to limit the OFF time as much as possible and hence decrease the amount of conduction time of the diode.

Reviewing the Single-ended Inverter-rectifier in this light, there are several limitations to this circuit. First, since the "set" and "reset" volt-second products must be equal, it is obvious that; a) if the attempt is made to operate near 100% ON time, the "reset" voltage must be quite high and therefore subject components to severe usage, b) transformer losses increase rapidly with decreasing "reset" time, and c) scaling the trans-

former so as to shift the duty cycle range means that the free-wheeling diode will conduct for a longer time, hence lowering efficiency, and the output choke must be sized to supply continuous current for a longer period. Therefore the push-pull systems, which have no "reset" limitations, offer a distinct advantage over the single-ended design, and the study will be limited to the push-pull chopper and the push-pull Inverter-rectifier.

F. Power Stage Drive Considerations

In order to switch the power stage as rapidly and as efficiently as possible, there are several drive requirements to be considered:

a) Fixed drive vs. variable. In a fixed drive system the transistors are always driven as if full load was applied. At light load, this type of drive is wasteful of base power, but power stage delay, rise, and fall times are somewhat reduced by overdriving the transistor. The use of transformer drive with load current feedback allows driving the transistors proportionally with load, so that the drive is always adequate to maintain the transistors well in saturation but never overdriven. In addition, the use of load current feedback reduces the driver stage's power output to only that necessary to initiate triggering of the power stage and to supply transformer mangetizing current.

b) Rise and fall times. For fast rise and fall times, the amplitude of the driving waveform should be high at the turn-on and turn-off edges, and then decrease to the minimum necessary level thereafter.

c) "OFF" time. During "off" time, the transistors should be reverse-biased so as to minimize leakage current losses. In a conventional square wave application this is readily achieved by the immediate reversal of the driving waveform. In a variable pulse width system, however, appreciable dwell time exists during which no drive voltage is applied. Energy which is stored during "on" time may be utilized, by various schemes, to provide reverse bias for some time duration, but the 45% conduction time (55% dwell time) imposes a rather long discharge requirement.

Figure 16 shows three applicable waveshaping schemes. In the BASE RC scheme, the driving pulse is initially high because of the capacitor coupling. As the capacitor charges, the base voltage is reduced to ($V_{in}-V_{R1}$). At the end of the ON time, Vin drops to zero, with the entire Vin amplitude being coupled through C1, so that Q1's V_{BE} goes negative by an amount equal to the capacitor's previous charge voltage. The capacitor then discharges exponentially through R1, so that Q1's V_{BE} rises toward zero. At the end of the dwell period, Vin goes negative. Assuming no base-emitter leakage, C1 and R1 merely transfer the (-Vin) potential to the base of Q1. This

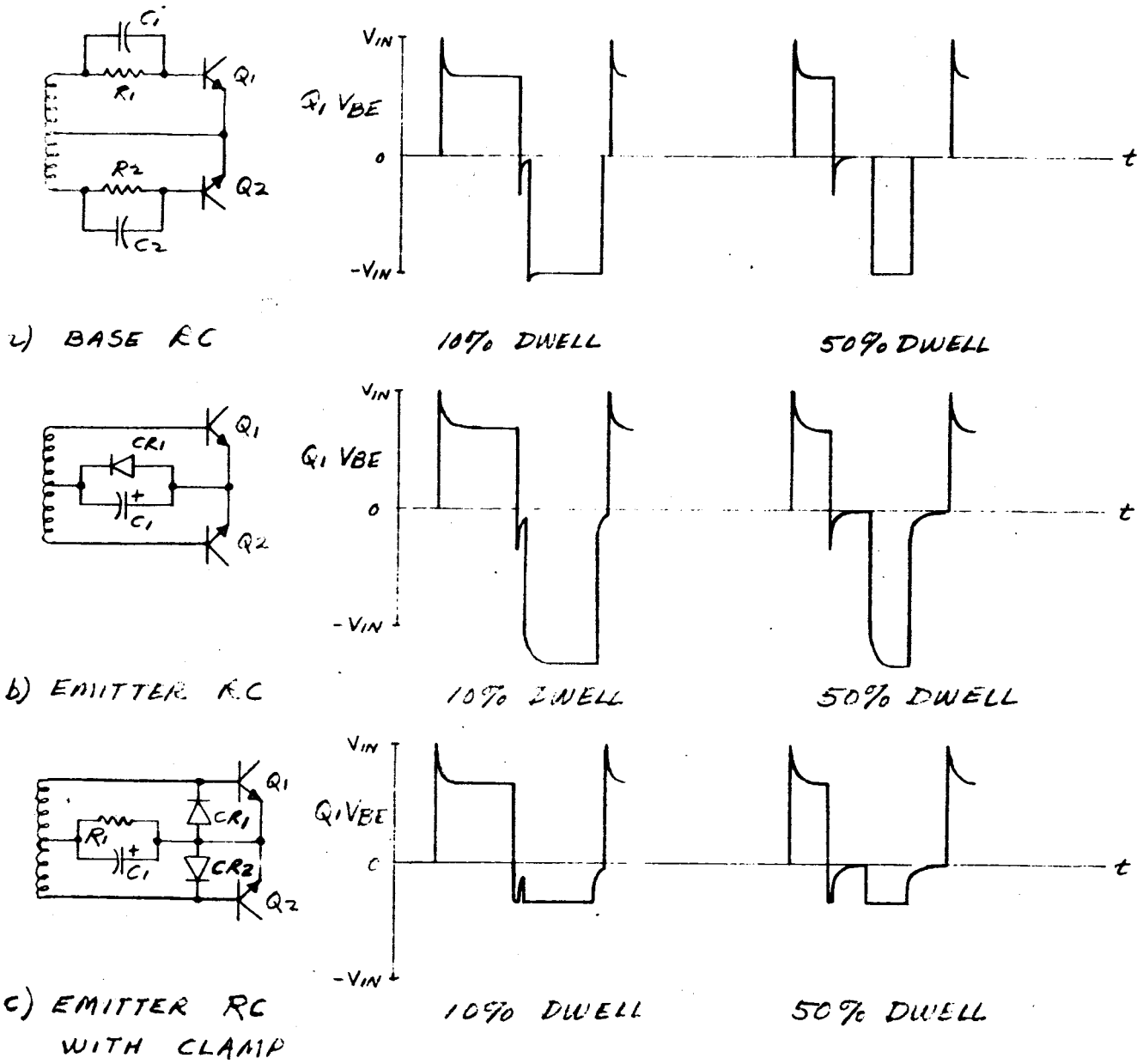

FIGURE 16. DRIVE WAVESHAPING NETWORKS

schme does supply high amplitude turn-on and turn-off edges but does not supply reverse bias during the majority of the dwell time.

In the EMITTER RC scheme (a diode may be used in place of the resistor), the rising edge is capacitor coupled so that $V_{BE}=V_{in}$. The capacitor then charges to the CR1 forward voltage, reducing Q1's V_{BE}. At the end of the ON time, the negative-going pulse of amplitude Vin is again capacitor coupled, so V_{BE} goes negative by an amount equal to the prior capacitor voltage. The capacitor then discharges through the diode and Q1's V_{BE} rises toward zero. At the end of the dwell period, Vin goes negative. Now Q2 conducts, and C1 charges again. Q1's V_{BE} then becomes $(-Vin) + (-V_{C1})$. Thus this scheme supplied a higher negative potential and longer reverse bias time than the BASE RC, has high amplitude turn-on and turn-off edges, and uses fewer components.

In the EMITTER RC WITH CLAMP scheme, the operation is essentially the same as the EMITTER RC, except that, during dwell time, C1 discharges through both CR1 and CR2, each of which clamps its respective transistor reverse base-emitter voltage to about one volt. The clamp may be necessary for power transistors such as the 2N3212, which has a BV_{BE} rating of only 2 volts.

In summary, the optimum driver stage appears to be transformer-coupled, with load current feedback. The EMITTER RC waveshaping circuit offers the longest reverse-bias time with the minimum number of components.

G. Materials Investigation

a. Available Power Semiconductors

Vendor literature was searched for transistors with fast switching times and low saturation voltages. Table 2 shows representative, presently-available transistors within the applicable power, voltage, and current range. It is interesting to note that, of the four germanium devices with frequency capabilities from 600KC to 15MC, the switching speeds are not nearly as high as most of the devices.

Table 3 shows the available high-speed power rectifiers in the range of 1 to 20 amps.

In the lower power range there are numerous transistors and diodes available with high frequency capabilities.

b. Usable Frequency Range of Semiconductors

In order to determine the usable frequency range as a function of the semiconductor characteristics, a model was established, consisting of a single transistor switch-

VENDOR	NUMBER	TYPE	DEVICE RATING POWER	BV_{CEO}	BV_{BE}	I_C	β / I_C	R_{CESAT} / I_C	LEAKAGE CURRENT	SWITCHING TIMES, TYPICAL t_d	t_r	t_s	t_f	@ I_C	f_{MAX}
MOT.	2N 3297	SIL.	25W	40V		1.5a	2.5 / 1a	.5Ω / 1a	.5ma						200mc
TI	2N2151	SIL.	30W	80V		2 a	40 / .5a	1.25Ω / 1a	.1ma						10mc
BEN.	2N3016	SIL.	5W	50V	4V	2.5a	60 / 1a	.5Ω / 1a							300mc
TI	2N2567	GE.	20W	60V	20V	3a	20 / 3a	.25Ω / 3a	20 ma	200ns	480ns	290ns	2150ns	3a	
TI	2N2986	SIL.	15W	120V		3a	20 / 2a	.63Ω / 2a	50μa						10mc
TI	TIX 3036	SIL.	10W	80V		3a	30 / 2a	.3Ω / 2a	50μa						20mc
MOT.	2N 3026	SIL.	25W	60V		3a	50 / 3a	.33Ω / 3a		10ns	23ns	56ns	23ns	3a	100mc
FAIR.	2N 2893	SIL.	30W	80V		5a	40 / 2a	.38Ω / 2a	.1μa	—300 ns—		—1500 ns—		1a	20mc
TI	2N1725	SIL.	50W	80V		5a	50 / 2a	.5Ω / 2a	.1ma						10mc
DELCO	2N3212	GE.		80V	2V	5a	12 / 5a	.24Ω / 5a		—3 μs—		3.5μs	1μs	3a	600KC
SSPI	2N2849	SIL.	5W	80V	4V	5a	100 / 1a	.4Ω / 1a	.1μa	20ns	40ns	350ns	50ns	1a	80mc
BEN.	2N3017	SIL.	10W	50V	4V	5a	30 / 5a	.1Ω / 5a							300mc
M-H	2N2880	SIL.	30W	80V	8V	5a	40 / 1a	.26Ω / 1a	.1μa	20ns	25ns	700ns	440ns	5a	50mc
M-H	MHT 6016	SIL.	40W	80V	8V	5a	100 / 1a	.5Ω / 1a	1μa	20ns	25ns	700ns	440ns	5a	30mc
M-H	MHT 2001	SIL.	5W	80V	12V	5a	1000 / 1a	1.5Ω / 1a	.1μa						50mc
RCA	2N 3231	SIL.	25W	80V		7a	20,000 / 2a	.7Ω / 2a	1μa	—350 ns—		1250ns	400ns	2a	40mc
PSI	PT1941	SIL.	90W			7a	15 / 7a	.14Ω / 7a		—1 μs—		—3 μs—		7a	
TI	2N1722A	SIL.	50W	80V		7.5a	20 / 2a	.3Ω / 2a	.1ma						10mc
WEST.	130-08	SIL.	120W	80V	10V	8a	15 / 5a	.2Ω / 5a		—1.6 μs—		—2 μs—			1mc
PSI	2N1902	SIL.	125W	50V		10a	25 / 5a	.1Ω / 10a		—600 ns—		—2 μs—		10a	
PSI	2N1900	SIL.			5V	10a	10 / 10a	.2Ω / 10a	15ma	40ns	200ns	700ns	220ns	10a	50mc
RCA	TA 2110	SIL.		300V		10a	12 / 10a	.15Ω / 10a	5ma	—1 μs—				3a	10mc
TI	2N1046B	GE.	30W	50V	1.5V	10a	10 / 10a	.1Ω / 10a	1ma						15mc
BEN.	2N3018	SIL.	25W	50V	4V	10a	40 / 5a	.1Ω / 5a							300mc
M-H	2N2814	SIL.	40W	80V	8V	10a	40 / 5a	.1Ω / 5a	.1μa	12ns	200ns	1200ns	550ns	10a	30mc
TI	TIX 211	SIL.	40W	80V		12a	20 / 10a	.2Ω / 5a			250ns	350ns	250ns	1a	50mc
TI	2N1908	GE.	60W	50V	2V	20a	20 / 15a	.075Ω / 15a	12ma	100ns	800ns	2500ns	1000ns	10a	10mc
TI	2N1937	SIL.	150W	80V		20a	10 / 10a	.075Ω / 10a		70ns	40ns	5000ns	400ns	10a	18mc
M-H	MHT 8003	SIL.	100W	80V	8V	20a	40 / 10a	.1Ω / 10a	.1ma	20ns	180ns	1700ns	800ns	10a	40mc
RCA	2N3263	SIL.	80W	90V		25a	25 / 15a	.05Ω / 15a	4ma	—300 ns—		400ns	100ns	15a	20mc
M-H	MHT 8302	SIL.	100W	80V	8V	30a	10 / 20a	.06Ω / 10a	10μa						25mc

TABLE 2. PRESENTLY-AVAILABLE HIGH-FREQUENCY POWER TRANSISTORS

VENDOR	NUMBER	RATING PRV	RATING I_f	V_f / I_f	I_r / V_r	I_{rr} / V_r	t_{rr} / I_f	CASE STYLE
UNITRODE	UTR 01 - 61	50-600V	1 a	1V .5a	10μa PRV		100ns 1a	GLASS BEAD
UNITRODE	UTR 02 - 62	50-600V	2 a	1V .75a	10μa PRV		100ns 1a	GLASS BEAD
G.E.	IN 3958 - 3963	100-600V	3.5a	1.4V 2a	.4ma -		3μs 10a	STUD
HUGH.	IN 3879 - 3883	50-400V	6 a	1.4V 6a	1ma PRV	2a —	200ns —	STUD
TI	TIX 440 - 442	50-200V	6 a	1.3V 6a	1ma PRV	1.5a 30V	100ns 1a	STUD
HUGH.	IN 3884 - 3888	50-400V	12 a	1.4V 12a	3ma PRV	2a —	200ns —	STUD
WEST.	379A - 379H	50-400V	12 a	1.15V 12a	10ma PRV	1a —	100ns 1a	DISC
HUGH.	IN 3899 - 3903	50-400V	20 a	1.4V 20a	6ma PRV	3a —	200ns —	STUD
HUGH.	HF SERIES	EQUIVALENT TO		6,12,20a	IN 3879-	3903 BUT	t_{rr} (typical)	80ns

TABLE 3. PRESENTLY-AVAILABLE HIGH-SPEED RECTIFIERS

ing thru an ideal choke input filter into a resistive load with voltages, currents, and duty cycle equivalent to those of the 10W regulator, as follows:

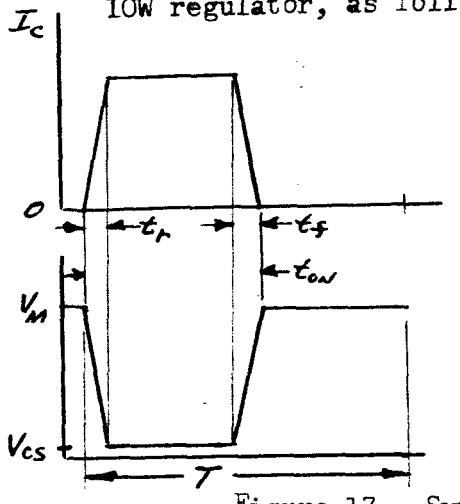

VM	Vout	Pout
20V	9V	10.1W
10V	9V	10.1W

Figure 17. Switching Model

In these calculations, delay and storage times were not considered. Transistor "OFF" losses were also ignored as being only a small percentage of total losses. Calculations were made at frequencies of 1, 10, 100, 250, and 500KC with the following transistors:

Table 4. 2N2880 Parameters

Cond. Time	tr+tf	I_B	I_C	V_{CS}	V_{BS}	Freq.
45.2%	.35us	.112	1.12	.12V	.9V	1KC
45.4%	↓	.113	1.13	↓	↓	10KC
47.0%	↓	.114	1.14	↓	↓	100KC
49.6%	↓	.116	1.16	↓	↓	250KC
54.1%	↓	.120	1.20	↓	↓	500KC
91.1%	↓	.112	1.12	↓	↓	1KC
91.2%	↓	.112	1.12	↓	↓	10KC
92.9%	↓	.113	1.13	↓	↓	100KC
95.5%	↓	.114	1.14	↓	↓	250KC
99.9%	↓	.116	1.16	↓	↓	500KC

Detailed curves for the 2N2880 were available, so typical values were selected for the above parameters. Variation of β with frequency was not available, so it was held constant, somewhat arbitrarily, at all frequencies.

Table 5. 2N1908X (assumed) Parameters

Cond. Time	tr+tf	I_B	I_C	V_{CS}	V_{BS}	Freq.
45.2%	1.8us	.112	1.12	.08V	.9V	1KC
46.0	↓	.113	1.13	↓	↓	10KC
54.1		.120	1.20			100KC
67.6		.135	1.35			250KC
90.5		.112	1.12			1KC
91.4		.113	1.13			10KC
99.5		.116	1.16			100KC

Detailed curves were not available for the 2N1908, so (tr+tf), I_B, V_{CS}, and V_{BS} were established so as to illustrate the effect of low saturation voltage and medium switching speed as a contrast to the medium saturation voltage and high speed of the 2N2880.

Tables were prepared, using the formulas below:

$$\text{COND. TIME} = \frac{V_{OUT}}{V_M - V_{CS}} + \frac{t_r + t_f}{2T} \qquad 1.)$$

$$I_C = P_{OUT} / (V_M - V_{CS})\left(\frac{3t_{ON} - 2t_r - 2t_f}{3T}\right) \qquad 2.)$$

$$P_{SWITCHING} = \frac{I_C}{6T}(t_r + t_f)(V_M + 2V_{CS}) \qquad 3.)$$

$$P_{ON} = \frac{I_C V_{CS}}{T}(t_{ON} - t_r - t_f) \qquad 4.)$$

$$P_{BASE} = \frac{I_B V_{BS}}{T}(t_{ON} - t_r - t_f) \qquad 5.)$$

$$P_D = P_{SWITCHING} + P_{ON} + P_{BASE} \qquad 6.)$$

$$\eta = P_{OUT} / P_{OUT} + P_D \qquad 7.)$$

Table 6. 2N2880 Dissipation Vs. Frequency

Cond. Time	Psw	Pon	P_B	P_D	η	Freq.	Vm
45.2%	.00132	.0609	.0457	.108	98.92	1KC	20
45.4%	.0133	.0612	.0459	.120	98.83	10KC	20
47.0%	.135	.0595	.0446	.239	97.68	100KC	20
49.6%	.342	.0571	.0428	.442	95.83	250KC	20
54.1%	.708	.0526	.0394	.800	92.66	500KC	20
91.1%	.000669	.122	.0918	.214	97.96	1KC	10
91.2%	.00669	.122	.0916	.220	97.87	10KC	10
92.9%	.0675	.121	.0909	.279	97.30	100KC	10
95.5%	.170	.119	.0890	.378	96.37	250KC	10
99.9%	.346	.114	.0856	.546	94.84	500KC	10

Table 7. 2N1908X Dissipation Vs. Frequency

Cond. Time	Psw	Pon	P_B	P_D	η	Freq.	Vm
45.2%	.00675	.0252	.0454	.0774	99.21	1KC	20
46.0%	.0681	.0249	.0449	.138	98.63	10KC	20
54.1%	.724	.0217	.0389	.785	92.75	100KC	20
67.6%	2.04	.0153	.0275	2.08	82.92	250KC	20
90.5%	.00339	.0506	.0911	.145	98.54	1KC	10
91.4%	.0342	.0506	.0911	.176	98.25	10KC	10
99.5%	.351	.0473	.0851	.483	95.46	100KC	10

Transistor efficiency versus frequency is plotted in Figure 18 for each transistor at each condition of input voltage and conduction time.

In the very low frequencies, switching time (tr+tf) is insignificant, and the 2N1908X is superior because of its lower saturation (V_{CS}) voltage. The condition of 45% duty cycle is more efficient than the 90% condition merely because the ON losses (Pon + PBase) occur for a smaller portion of the period.

In the higher frequencies, where switching time is a significant portion of the period, the 2N2880 is clearly superior by virtue of its switching speed. The 2N1908X cannot be operated much above 100KC, because of the assumed switching speed, since above this frequency the switching time soon becomes greater than the ON time. In the higher frequency region, the 90% duty cycle condition is the most efficient because the ratio of switching time/ON time is less than that for the 45% condition.

Although the curves of Figure 18 are approximate, since relatively few points are plotted for each curve, two points of interest can be noted.

First, each curve is relatively flat out to some frequency, at which time the curve begins to roll off rapidly. This seems to occur, judging from the dissipation tables above, at the frequency where Pswitching becomes equal to Pon + PBase. Equating Pswitching to Pon + PBase;

$$\frac{I_c}{6T}(t_r + t_f)(V_M + 2V_{CS}) = \left[I_c V_{CS} + I_B V_{BS}\right]\left[\frac{t_{ON} - (t_r + t_f)}{T}\right]$$

$$\text{LET: } I_B = \frac{I_c}{\beta} \quad \& \quad t_{ON} - (t_r + t_f) = T_{ON}$$

$$\text{THEN: } T_{ON} = \frac{(t_f + t_r)(V_M + 2V_{CS})}{6\left(V_{CS} + \frac{V_{BS}}{\beta}\right)}$$

NO. 340-L310 DIETZGEN GRAPH PAPER
41-LOGARITHMIC-3 CYCLES X 10 DIVISIONS

EUGENE DIETZGEN CO.
PRINTED IN U.S.A.

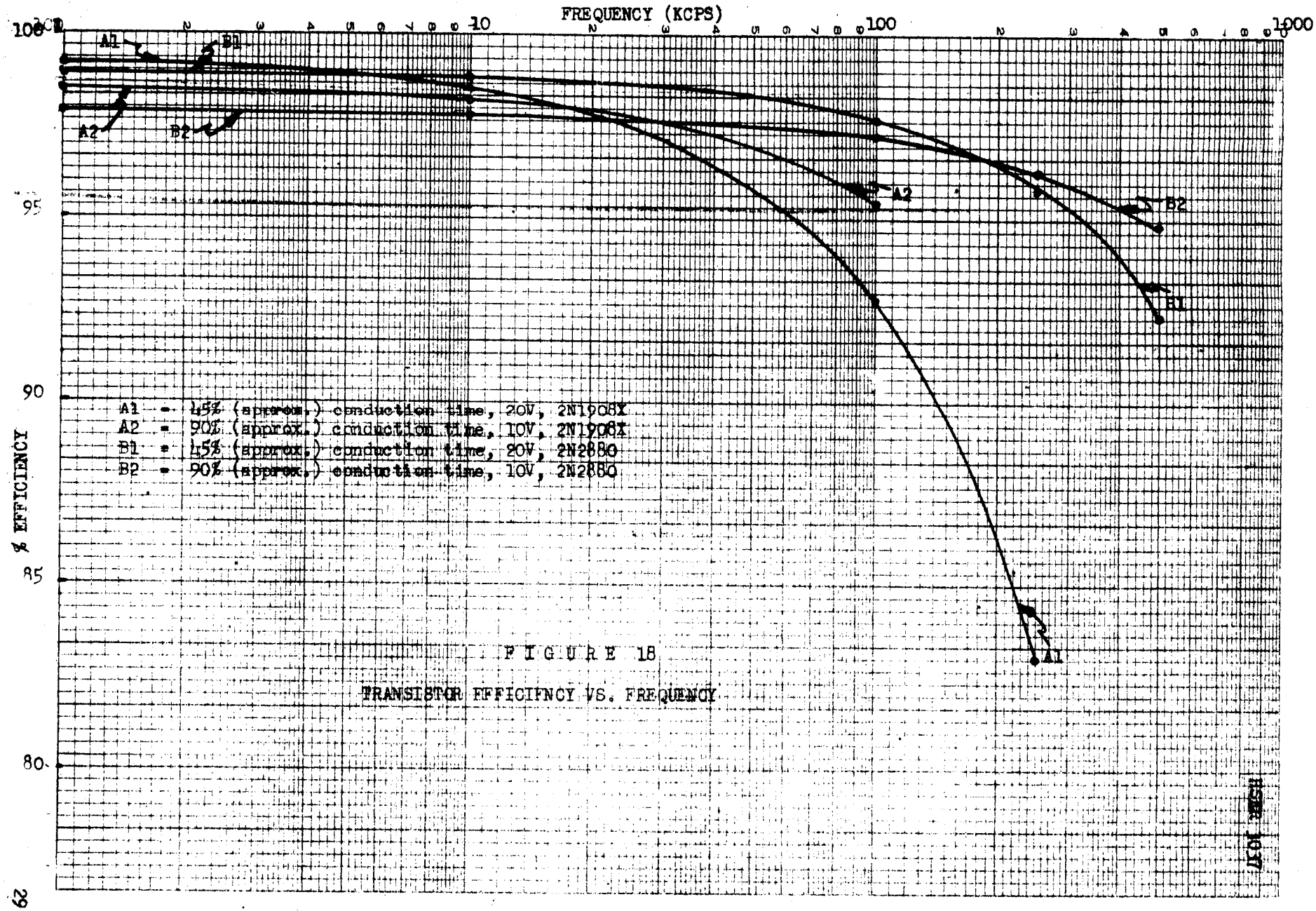

FIGURE 18

TRANSISTOR EFFICIENCY VS. FREQUENCY

BUT: $T_{ON} = \frac{T V_{OUT}}{(V_M - V_{CS})} - \frac{(t_r + t_f)}{2}$ (FROM EQUATION 1)

THUS: $T = \left[\frac{(V_M - V_{CS})}{V_{OUT}}\right]\left[\frac{(t_r + t_f)(V_M + 2V_{CS})}{6\left(V_{CS} + \frac{V_{BS}}{\beta}\right)} + \frac{(t_r + t_f)}{2}\right]$

OR: $T = \left[\frac{(V_M - V_{CS})}{V_{OUT}}\right]\left[t_r + t_f\right]\left[\frac{V_M + 2V_{CS}}{6\left(V_{CS} + \frac{V_{BS}}{\beta}\right)} + \frac{1}{2}\right]$ 8.)

AND $F_{ROLL\text{-}OFF} = \frac{1}{T}$ 9.)

FOR THE 2N2880: $V_M = 10\,V$, $V_{BS} = 0.9\,V$

$V_{CS} = 0.12\,V$, $(t_r + t_f) = 0.35 \times 10^{-6}$ SEC, $\beta = 10$

THEN: $T = 3.32 \times 10^{-6}$ SECONDS

$F_{ROLL\text{-}OFF} = 302 \times 10^{3}$ CPS

which agrees reasonably well with the curve labelled B2 of Figure 18.

Secondly, the frequency at which the curves (B1 and B2) cross each other may be determined by equating total losses for each condition and solving for T;

(LET SUBSCRIPTS 1 & 2 DENOTE CONDITIONS B1 & B2)

LET: $T_{ON} = t_{ON} - (t_r + t_f)$

THEN: $\frac{I_{C1}}{6T}(t_r + t_f)(V_{M1} + 2V_{CS}) + I_{C1}\frac{V_{BS}}{\beta}\left(\frac{T_{ON1}}{T}\right) + I_{C1}V_{CS}\left(\frac{T_{ON1}}{T}\right) =$

$\frac{I_{C2}}{6T}(t_r + t_f)(V_{M2} + 2V_{CS}) + I_{C2}\frac{V_{BS}}{\beta}\left(\frac{T_{ON2}}{T}\right) + I_{C2}V_{CS}\left(\frac{T_{ON2}}{T}\right)$

ALLOWING $I_{C1} = I_{C2}$ (INTRODUCES AN ERROR < 1%)

$$\frac{(t_f+t_r)}{6}(V_{M1}+2V_{CS}) + \frac{V_{BS}}{\beta}T_{ON1} + V_{CS}T_{ON1} =$$

$$\frac{(t_f+t_r)}{6}(V_{M2}+2V_{CS}) + \frac{V_{BS}}{\beta}T_{ON2} + V_{CS}T_{ON2}$$

BUT: $T_{ON} = \frac{TV_{OUT}}{(V_M - V_{CS})} - \frac{(t_r+t_f)}{2}$ (FROM EQUATION 1)

THEN: $$\frac{(t_f+t_r)}{6}(V_{M1}+2V_{CS}) + \left(\frac{V_{BS}}{\beta}+V_{CS}\right)\left[\frac{TV_{OUT}}{V_{M1}-V_{CS}} - \frac{(t_r+t_f)}{2}\right] =$$

$$\frac{(t_r+t_f)}{6}(V_{M2}+2V_{CS}) + \left(\frac{V_{BS}}{\beta}+V_{CS}\right)\left[\frac{TV_{OUT}}{V_{M2}-V_{CS}} - \frac{(t_r+t_f)}{2}\right]$$

OR: $$\left(\frac{V_{BS}}{\beta}+V_{CS}\right)\left[\frac{TV_{OUT}}{V_{M2}-V_{CS}} - \frac{(t_r+t_f)}{2}\right] - \left(\frac{V_{BS}}{\beta}+V_{CS}\right)\left[\frac{TV_{OUT}}{V_{M1}-V_{CS}} - \frac{(t_r+t_f)}{2}\right] =$$

$$\frac{(t_f+t_r)}{6}(V_{M1}+2V_{CS}) - \frac{(t_f+t_r)}{6}(V_{M2}+2V_{CS})$$

OR: $$T = \frac{(t_r+t_f)\left[V_{M1}+2V_{CS} - V_{M2} - 2V_{CS}\right]}{6\left(\frac{V_{BS}}{\beta}+V_{CS}\right)\left(\frac{V_{OUT}}{V_{M2}-V_{CS}} - \frac{V_{OUT}}{V_{M1}-V_{CS}}\right)}$$

OR: $$T = \frac{(t_r+t_f)(V_{M1}-V_{M2})}{6V_{OUT}\left(\frac{V_{BS}}{\beta}+V_{CS}\right)\left(\frac{1}{V_{M2}-V_{CS}} - \frac{1}{V_{M1}-V_{CS}}\right)} \qquad 10.)$$

AND: $$F_{CROSSOVER} = \frac{1}{T} \qquad 11.)$$

FOR THE 2N2880: $V_{M1} = 20\,V$, $V_{M2} = 10\,V$, $V_{OUT} = 9\,V$,

$V_{BS} = 0.9\,V$, $V_{CS} = 0.12\,V$, $(t_r+t_f) = 0.35\,\mu SEC$, $\beta = 10$

Using the 2N2880 with subscripts 1 and 2 for conditions B1 and B2 respectively;

$$\text{THEN:} \quad T = 6.09 \times 10^{-6} \text{ SECONDS}$$

$$F_{CROSSOVER} = 162 \times 10^{3} \text{ CPS}$$

The curves (B1 and B2) of Figure 18 indicate that crossover occurs at about 160KC which agrees well with the above result.

Summary

Transistors with very low saturation voltages are more efficient at low frequencies. Most high frequency transistors possess higher saturation voltages, but at higher frequencies their increased switching speeds render them more efficient.

If "OFF" losses and delay and storage times are neglected, equations 8 and 9 allow the prediction of the efficiency roll-off frequency of any transistor as a function of known circuit requirements and transistor parameters. Operation above the roll-off frequency will result in a rapid decline of transistor efficiency. Calculations indicate that operation at any frequency below roll-off will not increase efficiency by more than 1 or 2%.

If "OFF" losses and delay and storage times are neglected, equations 10 and 11 allow the prediction of the crossover frequency. The crossover frequency is a composite roll-off frequency which sets the upper frequency limit for a transistor which must operate over an input voltage range with duty cycle control. Operation above crossover frequency results in rapid decline of efficiency for the high input, low duty cycle condition. Operation below crossover will result in an efficiency increase ranging from almost 0 upward to about 1 or 2%, depending upon input voltage and duty cycle.

c. Available Magnetic Materials

One of the considerations of this program is to minimize the contribution of the magnetic components to stray magnetic fields. Several factors which contribute to stray fields are air-gaps, non-uniform winding distributions, and loose coupling between windings and core.

In surveying the available magnetic materials, both stamped laminations and c-cores were eliminated immediately because they have built-in air-gaps and because their windings cannot be uniformly distributed or tightly-coupled to the core. The hermetically-sealed, oil-filled, tape-wound variety of toroids was considered, but these cores are available with a minimum tape thickness of 1 mil, which allows for operation up to about 10KCPS, beyond which the core losses become prohibitive.

The configurations which offer the most promise are the toroidal and the tape-wound bobbin cores. The toroids offer high permeability, uniform winding distribution, tight coupling, and inductive tolerances of about ±20% maximum. Their prime use is non-critical inductors and transformers where small size is a requirement. Their frequency range is a function of the core material, and materials available include molybdenum-permalloy, iron powder, and ferrites.

The tape-wound bobbin cores cover the frequency range of 2 to 500KCPS. Use of stainless steel rather than ceramic bobbins is recommended, because their smaller wall thickness gives smaller winding periphery, hence lower overall winding resistance, and better ratio of core cross-sectional area to overall bobbin cross-sectional area, thus reducing flux leakage somewhat. These cores are available in either Orthonol or Permalloy 80 materials, and in tape thicknesses of 1/8, 1/4, 1/2 and 1 mil. At the present time no published core loss curves, and almost no laboratory-type curves are available for these materials, so that in general the vendors can only recommend what to use for a particular application.

In the power-frequency range, say up to 500CPS, the prime requisite for core material is high permeability, and core losses and switching time are secondary considerations. In the audio range, from 500 to 15KCPS, both hysteresis and eddy current losses become important, and only moderate permeability is required. In the high frequency range, from 15KCPS upward, eddy current losses predominate, switching time becomes important, and permeability can be quite low.

Generally speaking, materials, such as Orthonol, which have very square hysteresis loops have slower switching times than those materials which have more rounded loops, such as 4-79 Molybdenum-Permalloy, at a given drive level in Oersteds. For a specific transformer, switching time is approximately an inverse linear function of drive level, so that the core should be driven into, or as close as possible to, saturation in order to achieve the fastest possible switching time.

At this time, little specific information regarding the magnitude of losses vs. frequency has been assembled. However, the following table shows, for each frequency range, the relative characteristics of the applicable core materials:

Table 8. Relative Characteristics of Core Materials for Specific Frequency Ranges

Freq., CPS	Core Material	Hysteresis Loss	Eddy Cur. Loss	Permeability
0.5-15K	Moly-Perm. Powder Iron Powder Ferrite	Low Moderate High	Low Low Low	High, Decreasing High, Decreasing Low, Constant
15-40K	Moly-Perm.Powder Iron Powder Ferrite	Low Low Moderate	High Moderate Low	Moderate, Decreasing Moderate, Decreasing Moderate, Constant
40-200K	Moly-Perm.Powder Iron Powder Ferrite	Low Low Low	Excessive High Low	Low Low High

(Tape-wound bobbin cores not included because loss curves are not available.)

H. Power Source and Load Considerations

a. Power Source Considerations

Since this study is directed toward satellite power systems, and since most of the present satellite power systems use either batteries, solar cells, or a combination of both, it seems reasonable to examine such sources.

A simple system is shown in Figure 19 a). Depending upon light conditions and power required, either the battery or the solar array may furnish the load power at any given time.

Figure 19 b) indicates the possible mode of operation of such a source. Suppose the solar array is furnishing load power equivalent to that at point A on the solar array curve. If the load is increased, the operating point moves along the solar array curve toward B. Point B represents the solar array's maximum power point, and the array will supply the load until the operating point moves past B. At this time, since the load demand exceeds the source capability, the operating point will jump to the battery curve at point C, and continue along that curve until the load demand is satisfied, say at D. A decreasing load will cause the operating point to retrace a similar sort of locus back to the solar array curve.

Under these conditions, the regulator is faced with very rapid changes of input voltage for, perhaps, only minute changes of load, and the probable result will be output transients and/or regulator instability. Unfortunately, the regulator has very little perogative in the matter, and the only thing to be done

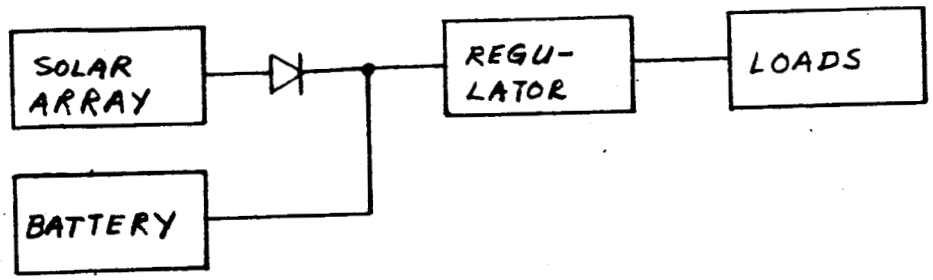

a) TYPICAL POWER SYSTEM

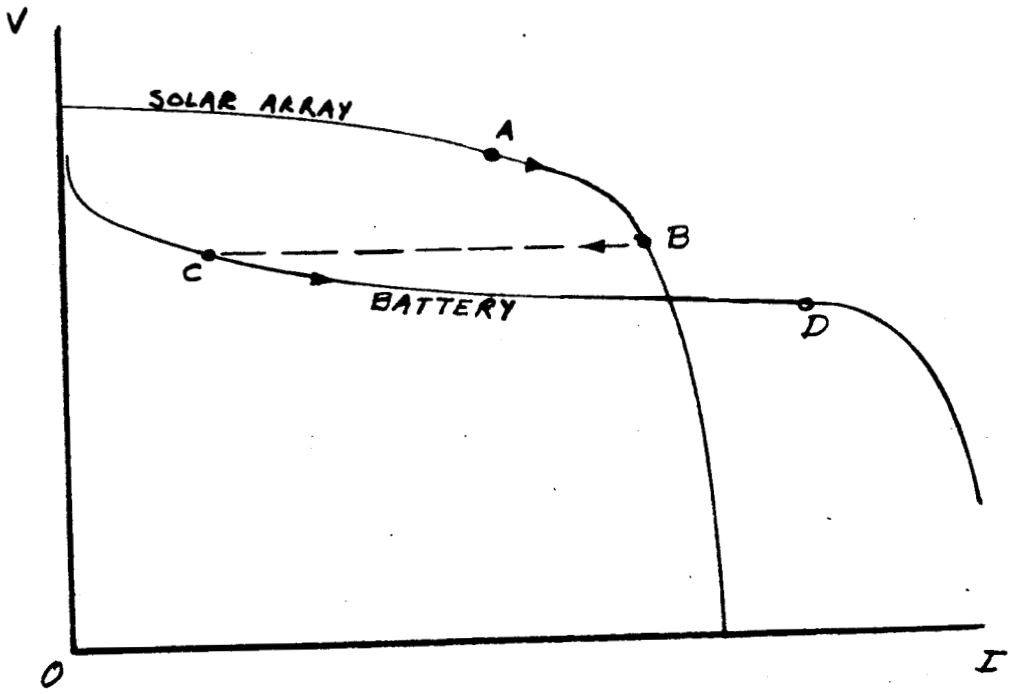

b) OPERATING POINT LOCUS

FIGURE 19. OPERATION OF TYPICAL BATTERY-SOLAR ARRAY SYSTEM

is to incorporate energy storage in the regulator's input circuitry in an attempt to reduce the input transients as much as possible.

Energy storage at the regulator's input is also desirable from the standpoint of maximum utilization of the source. In a variable duty cycle, switching regulator the peak input demand may be about twice the average power demand. If no storage is utilized, the source must be sized for the peak demand rather than the average, resulting in increased source size, weight, and cost.

The study specification includes changes of source voltage between the minimum and maximum extremes, with 10 millisecond rise and fall times. In the limiting case, where a rise may immediately follow a fall, this would correspond to a period of about 20 milliseconds. Since the frequency of operation of these regulators is assumed to be at least 5KCPS, the 10 millisecond variation is virtually steady state so far as the input filter is concerned. Therefore, the amount of suppression of the cyclic input variations will be primarily a function of the regulator's modulating circuitry.

b. Load Considerations

So far as load is concerned, there are two items of interest:

First, the specification requires operation from no load to full load, ±1% voltage regulation for line, load and environment, and very high efficiency from 25% to full load.

With an LC lowpass output filter and no load whatsoever, the capacitor will peak-charge, so that ±1% regulation cannot be held unless a bleeder is used. The bleeder must not degrade efficiency when 25% or greater load is applied, however.

Second, for input variations between minimum and maximum levels with 10 millisecond rise and fall times occurring simultaneously with step changes of load from 75 to 100% or 100 to 75%, the output voltage must not deviate more than ±2% of nominal and must recover to ±1% within 50 milliseconds.

As discussed above, the suppression of the cyclic input variation will be a function of the response of the modulating circuitry. There will be an excursion of output voltage due to the step load changes, since the change occurs in theoretically zero time and the controller cannot be infinitely fast.

If, as discussed in Section IV E above, the circuit concept uses a constant volt-second function to vary pulse width inversely with input voltage, the following block diagram may be established for the push-pull chopper:

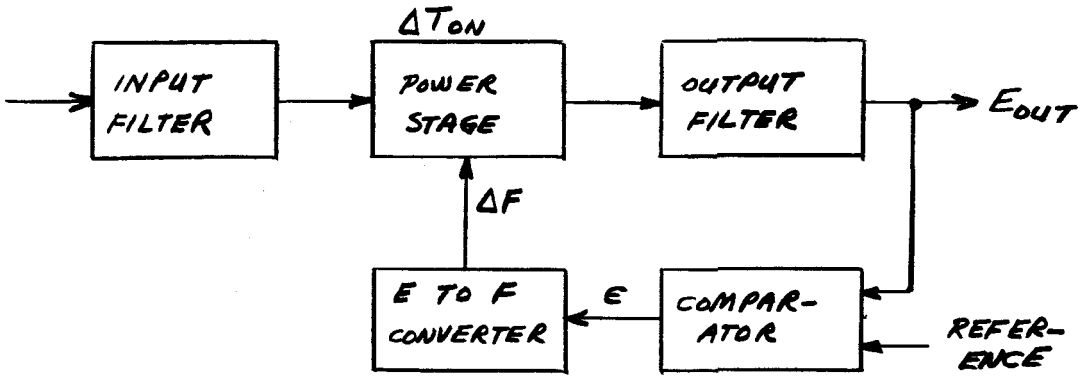

Figure 20. Chopper Block Diagram

In this approach, the power stage ON time is equal to k/e_{in}, so that the output of the power stage, at fixed load, will be a train of pulses of varying width, with amplitude equal to the instantaneous value of e_{in}. The output filter integrates this pulse train to its average DC value. If the load changes, the comparison circuit generates an error voltage, which in turn is converted to a change of frequency of the power stage's switching so as to maintain E_{DC} constant.

From a preliminary viewpoint, it appears that, if the frequency of operation is high compared to the frequency of the input variations, the power stage and output filter will suppress the cyclic variations. The stability problem resolves primarily to the output filter, the frequency at which the load is switched, and the response of the control circuit.

V. CONCLUSIONS AND RECOMMENDATIONS

The type of circuitry selected for further study is the push-pull chopper and the push-pull inverter-rectifier. The most promising mode of operation is a combination of pulse and frequency modulation.

Circuits which automatically adjust pulse width as a function of input voltage promise fast response and inherent suppression of input variations. Several such circuits are available, one of which uses current feedback drive, the other using voltage drive. The current feedback circuit appears to be simpler and possibly more efficient.

A reasonably large selection of transistors is available, with frequency capabilities applicable to this study. The selection of high-speed rectifiers is much more limited but should prove adequate. The available magnetic materials appear to be limited to toroids using molybdenum-permalloy powder, iron powder, or ferrites, and tape-wound bobbin cores. In a pulse-width modulated system with input voltage and duty cycle variations equivalent to those of the 10W chopper, the maximum operating frequency appears to be about 20 to 30KCPS, based only on semiconductor efficiency considerations.

VI. PROGRAM FOR NEXT INTERVAL

During the next quarterly period, effort will be directed to the following areas:

A. Magnetic investigation. Designs will be generated for a model transformer using various combinations of core material, flux density, and frequency. Efficiency, size and weight estimates for each combination will be compared and a frequency range determined for maximum efficiency, minimum size and weight. This will be combined with the semiconductor data to select the maximum operating frequency for the regulators.

B. Stability against source and load variations. The block diagram, Figure 20, will be examined for the possibility of predicting its closed loop response.

C. Overall circuit concept. A detailed circuit concept will be generated for one regulator.

D. Preliminary breadboard work. Control circuits, power stage, and output filters will be breadboarded in a preliminary manner to check out the circuit concept and investigate short circuit characteristics.

E. Detailed design. Detailed design of the eight regulators will be initiated.

VII. BIBLIOGRAPHY

1. "A Report on Contract Programs at General Electric Co."
   C. Christianson, S. Nielsen
   Proceedings - BuWeps Symposium on Power Transformation and Voltage Regulation, July 18, 1963.

2. "Optimization Study of High Power Static Inverters and Converters"
   A. Larsen, J. Murray
   Quarterly Report No. 1
   NASA Contract NAS 3-2785

3. "Satellite Power Supply has Variable Pulse Width"
   E. Josephson
   Electronics, V.35, n8, February 23, 1962
   McGraw-Hill, Inc.

4. "A Two-State Modulation System"
   A. Bose, MIT Research Laboratory
   Quarterly Progress Report No. 66, July 15, 1962
   Quarterly Progress Report No. 67, October 15, 1962
   Quarterly Progress Report No. 70, July 15, 1963

5. "A New Pulse Modulator for Accurate DC Amplification with Linear or Non-Linear Devices"
   R. Schaefer
   IRE Transactions on Instrumentation, VI-11, N2, September 1962

6. "Unijunction Transistor Multivibrator" General Electric Transistor Manual, Fourth Edition, 1959

7. "The Spacecraft Power Supply System"
   D. Bomberger, D. Feldman, D. Trucksess, S. Brolin, P. Ussery
   Bell System Technical Journal, VXLII, n4 part 1, July 1963
   American Telephone & Telegraph Co.

8. "A Pulse Modulator That Can Be Used As An Amplifier, A Multiplier, or a Divider"
   J. Rosenthal
   IEEE Transactions on Instrumentation and Measurement, V IM-12, n3, December 1963

9. "Switch Modulation Techniques"
   F. Schwarz
   First Quarterly Progress Report, July-October 1961
   Signal Corps Contract No. DA 36-039-SC-87353

10. "Telstar Satellite Power System"
    R. Anderson, E Hake
    Power Systems for Space Flight - Progress in Astronautics and Aeronautics - Volume II Academic Press, 1963

11. "Low Frequency Pulse Generator"
G. Mahoney
EEE, V12, n6, June 1964
Mactier Publishing Corp.

12. "Transistor Pre-Regulator Reduces Dissipation in Series-Pass Transistors"
E. Weisner, Editor
Electrical Design News, V9, n6 June 1964
Rogers Publishing Co., Inc.

13. "Linear Control using ON-OFF Controllers"
A. Sorenson
Electro-Technology, V71, n4, April 1963
Conover-Most Publications, Inc.

14. "Low Voltage DC to DC Conversion"
B. Driesbach
Proceedings, 16th Annual Power Sources Conference, 22-24 May, 1962

15. "Unsymmetrical Low Voltage Converter"
W. Dudley
Proceedings, 17th Annual Power Sources Conference
21-23 May 1963

16. "Low Input Voltage Conversion, Report No. IV"
J. Lingle, S. Heanor, T. Sundvar
Fourth Quarterly Progress Report, April-June, 1963
Signal Corps Contract No. DA-36-039-SC-90808

17. "Static Power Conversion for Spacecraft"
T. Koerner
Astronautics and Aerospace Engineering, May 1963
American Institute of Aeronautics and Astronautics

18. Private Conversation with A. Powell of HSED, November, 1963

19. "Research and Development Study on DC to DC Converter"
L. Hemphill
First Quarterly Report, July-October 1963
NASA Contract NAS 5-3470

20. "DC to DC Converter"
B. Hart
Hamilton Standard Internal Memorandum, 12 August 1960

21. "Static Inverter Study Program, Inverter Building Block Survey"
M. Merriam
Hamilton Standard Internal Report, 31 January 1961

22. "Low Input Voltage DC to DC Converter, Report No. II"
J. Lingle
Second Tertiary Progress Report, September-December 1963
NASA Contract NAS 5-3441

23. "Considerations In The Design of Switching Type Regulators"
R. Loucks
Solid State Design, April 1963
Horizon House, Inc.

24. "Portable Battery Chargers"
Aerospace Research, Inc.
First Quarterly Report
Signal Corps Contract No. DA-36-039 AMC-02330(E)

25. "Medium Power Silicon Transistor DC to DC Converters"
F. Mills
Fairchild Semiconductor Corp., Application Bulletin
APP-88, December 1963

26. "The Switching Mode In DC Voltage Regulation"
A. Lambert
Electro-Techology, V71, n6, June 1963
Conover-Mast Publications, Inc.

27. "Power Supply has Switching Pre-Regulation"
J. Riordan
Electronics, V35, n10, March 9, 1962
McGraw-Hill, Inc.

28. "Low-cost Universal Regulator Takes Plug-ins for Varied Needs"
A. Gass, F. Ferraiolo
Electronic Equipment Engineering, V10, n7, July 1962
Mactier Publishing Corp.

29. "Transistor DC Converter with Magnetic Stabilization"
N. Ganskau, M. Poyurovskii (English Translation)
Instrument Construction, n1, 1961

30. "Bridge Chopper Inverter for 400 cps Sine Wave Power"
R. Morgan
IEEE Transactions on Aerospace, V2, n2, April 1964

31. "Power Loss vs. Frequency----in DC to DC Converters"
R. Greenburg
Motorola Application Note AN 131, May 1961

32. "The Solar Power Supply System for the Arbiting Astronomical Observatories"
C. Wenzinger, H. Carleton
AIAA Summer Meeting, June 17-20, 1963

33. "Method for Calculating the number of Silicon Solar Cells Required for Power Supply of Satellites and Space Vehicles"
W. Luft
International Rectifier Corp., Application Note

34. "One-step Converter for DC to AC"
J. McLeod
Electronic Products, V7, n4, September 1964
Tech Publishers, Inc.

VIII. CONFERENCES

On July 5, 1964, a conference was held with Messrs. Yagerhofer and Pascuitti of NASA Goddard. Discussion concerned program progress, philosophy of the study, and a review of the literature search. The criteria for selection of circuitry was reviewed, and weighting factors established.

On September 25, 1964, a second conference was held with Mr. Pascuitti. Program progress was discussed, and a rough draft of the first quarterly report was reviewed. It was decided that the original program plan should be modified somewhat, with the aim of performing most of the analytical and feasibility investigations before any formal breadboard work was initiated.

IX. NEW TECHNOLOGY

Not applicable during this report period.