https://ntrs.nasa.gov/search.jsp?R=19650011755 2018-07-25T02:43:10+00:00Z

No. 65-001

STABILITY OF TWO-LAYER VISCOUS STRATIFIED FLOW DOWN AN INCLINED PLANE*

by

Timothy W. Kao

Department of Space Science and Applied Physics
The Catholic University of America
Washington, D.C. 20017

September 1964

GPO PRICE $ _____

OTS PRICE(S) $ _____

Hard copy (HC) $2.00

Microfiche (MF) .50

N65-21356 (ACCESSION NUMBER)
45 (PAGES)
CR 57878 (NASA CR OR TMX OR AD NUMBER)
(THRU)
1 (CODE)
12 (CATEGORY)
FACILITY FORM 602

* The main part of this work was supported by the U.S. Public Health Service, Grant WP-00428 while the author was at the California Institute of Technology. Some additional work was supported by NASA, Contract No. NSG 586 at the Catholic University of America.

ABSTRACT

21356

The stability of flow down an inclined plane is investigated for the case of a stratified fluid system consisting of two layers of viscous fluids of different densities. This problem is an extension of the works of Benjamin and Yih for a homogeneous fluid; thus their results are a special case of the solution for this more general problem. Asymptotic cases for long and short wave length disturbances are considered, and the neutral curve is estimated. Reynolds numbers for the bifurcation point of the neutral curve are found for various ratios of density and depth of the two layers. For long waves, shear wave instability is also studied and is found to be damped. For the purpose of comparing the relative stability between different configurations, a stability index is defined. It is found that the two-layer flow is more stable or unstable than the homogeneous case of equal total depth, depending on whether the upper fluid is lighter or heavier than the lower one. The source of instability is to be found in the presence of the interface.

It is hoped that this work will bear on problems of flow stabilizing techniques and liquid extraction processes.

Author

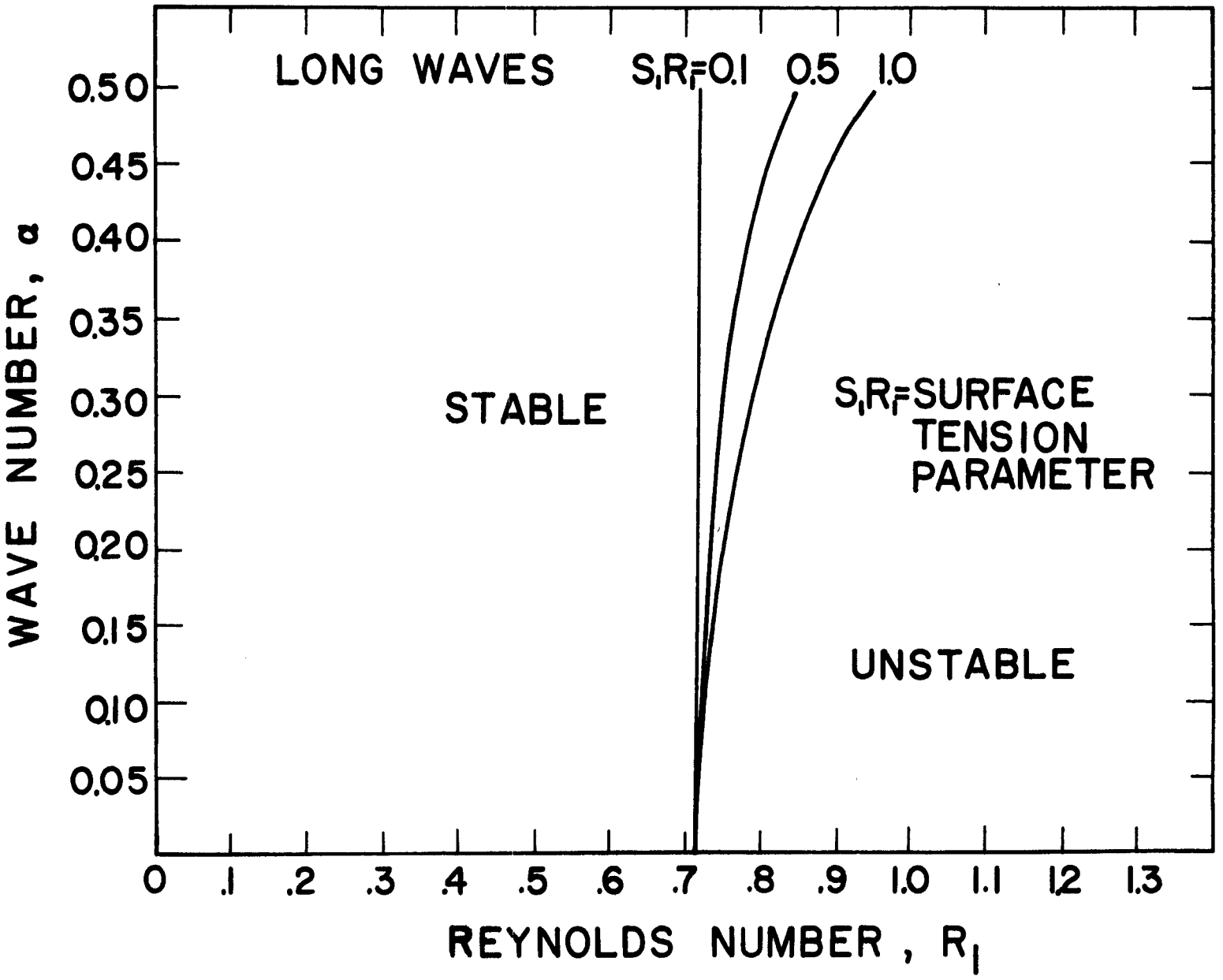
LONG WAVES
S_1R_1=0.1
0.5
1.0
STABLE
S_1R_1=SURFACE TENSION PARAMETER
UNSTABLE
WAVE NUMBER, α
0.50
0.45
0.40
0.35
0.30
0.25
0.20
0.15
0.10
0.05
0
.1
.2
.3
.4
.5
.6
.7
.8
.9
1.0
1.1
1.2
1.3
REYNOLDS NUMBER, R_1

CONTENTS

	Page
ABSTRACT	ii
1. INTRODUCTION	1
2. THE BASIC FLOW	2
3. THE STABILITY PROBLEM	6
A. Equations of Motion	6
B. Perturbation Equations	7
C. Boundary Conditions	9
D. Eigenvalue Problem	12
4. SOLUTION OF THE EIGENVALUE PROBLEM	14
A. Case for Long Waves (Small α)	14
B. Case for Short Waves (Large α)	24
5. THE RELATIVE STABILITY INDEX	28
6. DISCUSSION OF GRAPHS	30
7. SUMMARY OF CONCLUSIONS	32
ACKNOWLEDGEMENTS	33

1. INTRODUCTION

The investigation of the stability of laminar flow of a homogeneous fluid down an inclined plane has been undertaken by Kapitza[1], Yih[2], and Benjamin[3] and was recently given a definitive treatment by Yih[4]. Yih's results showed that for long waves (small α), $R = \frac{5}{6} \cot \theta$ is the critical Reynolds number above which some disturbances will be amplified, and the line $\alpha = 0$ in the $\alpha - R$ plane is part of the neutral stability curve, and that very short waves are damped by surface tension.

In this paper, the problem has been extended to flow of a heterogeneous system consisting of two layers of viscous fluid of different densities. The superposition of a lighter fluid on top of a heavier fluid introduces a fluid-fluid interface. The question then arises as to what effects the presence of the upper fluid and the interface have on the hydrodynamic stability of the system. These effects will be examined with respect to both surface disturbances and shear waves.

This study is of interest to various problems of flows of two liquids that occur in many industrial processes, such as liquid extraction.

---

1 P.L. Kapitza, Zh. Eksperim: i Teor. Fiz. 18, 3 (1948), 18, 20(1948); 19, 105 (1949)

2 C.-S. Yih, "Stability of Parallel Laminar Flow with a Free Surface," Proceedings of the Second U.S. National Congress of Applied Mechanics (American Society of Mechanical Engineers, New York, 1955), pp. 623-628.

3 T.B. Benjamin, J. Fluid Mech., 2, 554 (1957)

4 C.-S. Yih, Physics of Fluids, 6, 3, 321 (1963)

2. THE BASIC FLOW

In this section the basic unperturbed flow pattern is obtained. The basic flow is assumed to be the steady flow of two viscous, incompressible fluids at uniform depth down a plane inclined at an angle θ with the horizontal, in a gravitational field. With the coordinate axes X-Y as shown in Fig. ia with origin at the interface, the unperturbed flow is parallel to the X-axis and the velocity is a function of Y only. The upper layer is a fluid of density ρ_1 and depth d_1; and the lower layer is of density ρ_2, and depth d_2.

The Navier-Stokes equations that govern the basic flow are

$$\left.\begin{aligned} 0 &= \rho_1 g \sin\theta + \mu \frac{d^2 \bar{u}_1}{dY^2}, & (1)\\ 0 &= -\frac{d\bar{p}_1}{dY} + \rho_1 g \cos\theta, & (2)\end{aligned}\right\} \quad -d_1 \le Y \le 0,$$

$$\left.\begin{aligned} 0 &= \rho_2 g \sin\theta + \mu \frac{d^2 \bar{u}_2}{dY^2}, & (3)\\ 0 &= -\frac{d\bar{p}_2}{dY} + \rho_2 g \cos\theta, & (4)\end{aligned}\right\} \quad 0 \le Y \le d_2$$

where $\bar{u}_1$, $\bar{u}_2$ are the components of velocity of the two fluids in the X-direction, $\bar{p}_1$, $\bar{p}_2$ are the pressures, and g is the gravitational acceleration and μ is the viscosity of the two fluids, considered equal. The pressure gradient in the X-direction is zero. Since the

flow is parallel to the X-axis, the equation of continuity is automatically satisfied.

Equations (1) to (4) can be integrated at once subject to the boundary conditions

$$\frac{d\bar{u}_1}{dY} = 0 \,, \qquad \text{at } Y = d_1, \text{ (zero shear at the free-surface),}$$

$$\bar{u}_2 = 0 \,, \qquad \text{at } Y = d_2, \text{ (no slip at the solid boundary),}$$

$$\bar{u}_2 = \bar{u}_1 \,, \qquad \text{at } Y = 0, \text{ (no slip at the interface),}$$

and

$$\frac{d\bar{u}_2}{dY} = \frac{d\bar{u}_1}{dY} \,, \qquad \text{at } Y = 0, \text{ (equal shear at the interface).}$$

The solution is

$$\bar{u}_1 = (\rho_1 g \sin\theta/\mu)\left[\left(\frac{\rho_2}{\rho_1} d_2^2 - Y^2\right)/2 + d_1 (d_2 - Y)\right] , \tag{5}$$

and

$$\bar{u}_2 = (\rho_2 g \sin\theta/\mu)\left[(d_2^2 - Y^2)/2 + \frac{\rho_2}{\rho_1} d_1 (d_2 - Y)\right] . \tag{6}$$

If we now define the average velocity $\bar{u}_a$ to be

$$\bar{u}_a = 1/(d_1 + d_2)\left\{ \int_{-d_1}^{0} \bar{u}_1(Y)\,dY + \int_0^{d_2} \bar{u}_2(Y)\,dY \right\} ,$$

and, after introducing the dimensionless parameters,

$$d_1/d_2 = \delta \ , \qquad \rho_1/\rho_2 = \gamma \ , \tag{7}$$

we have

$$\bar{u}_a = (\rho_2 g \sin\theta\, d_2^2/\mu)\left\{[\gamma(\delta/2 + \delta^2 + \delta^3/3) + (1/3 + \delta/2)]/(1+\delta)\right\} .$$

To simplify writing, we shall define the dimensionless factor

$$K \equiv (1+\delta)/[\gamma(\delta/2 + \delta^2 + \delta^3/3) + (1/3 + \delta/2)] \ . \tag{8}$$

$\bar{u}_a$ can now be written as

$$\bar{u}_a = \rho_2 g \sin\theta\, d_2^2 / K\mu . \tag{9}$$

From this expression it is natural to define the Reynolds numbers and Froude number to be

$$R_1 = \rho_1 \bar{u}_a d_2/\mu \ , \quad R_2 = \rho_2 \bar{u}_a d_2/\mu \ , \quad F = \bar{u}_a/(g d_2)^{1/2} \tag{10}$$

It then follows that $R_1 = \gamma R_2$, and

$$KF^2 = R_2 \sin\theta \ . \tag{11}$$

With $\bar{u}_a$ as the characteristic velocity and d_2 as the characteristic length, the non-dimensionalized velocities U_1 and U_2 are then

$$U_1 = K\gamma\,[(1/\gamma - y^2)/2 + \delta(1-y)]\,, \tag{12}$$

and

$$U_2 = K\,[(1-y^2)/2 + \gamma\delta(1-y)]\,. \tag{13}$$

where

$$U_1 = \bar{u}_1/\bar{u}_a\,,\quad U_2 = \bar{u}_2/\bar{u}_a\,,\quad y = Y/d_2\,.$$

Equations (12) and (13) thus give the velocity distributions in completely normalized form.

3. THE STABILITY PROBLEM

The stability problem is now formulated following the usual small perturbation technique, and with the usual procedure of considering two-dimensional disturbances only, since Squire's result[5] and later extensions by Yih[6] have shown that the stability or instability of a three-dimensional disturbance can be determined from that of a two-dimensional disturbance at a higher Reynolds number.

A. Equations of Motion

The Navier-Stokes equations are,

$$\frac{\partial \tilde{u}_i}{\partial T} + \tilde{u}_i \frac{\partial \tilde{u}_i}{\partial X} + \tilde{v}_i \frac{\partial \tilde{u}_i}{\partial Y} = -\frac{1}{\rho_i}\frac{\partial \tilde{p}_i}{\partial X} + g \sin\theta + \frac{\mu}{\rho_i}\Delta^* \tilde{u}_i ,$$

$$\frac{\partial \tilde{v}_i}{\partial T} + \tilde{u}_i \frac{\partial \tilde{v}_i}{\partial X} + \tilde{v}_i \frac{\partial \tilde{v}_i}{\partial Y} = -\frac{1}{\rho_i}\frac{\partial \tilde{p}_i}{\partial Y} + g \cos\theta + \frac{\mu}{\rho_i}\Delta^* \tilde{v}_i ,$$

where i = 1 denotes quantities associated with the upper fluid, and i = 2 denotes quantities associated with the lower fluid, and $\tilde{u}_i$, $\tilde{v}_i$ are the velocity components in the X, Y directions, respectively, $\tilde{p}_i$ is the pressure, T is the time, and $\Delta^* \equiv \partial^2/\partial X^2 + \partial^2/\partial Y^2$.

The continuity equation is

$$\frac{\partial \tilde{u}_i}{\partial X} + \frac{\partial \tilde{v}_i}{\partial Y} = 0 .$$

The above equations are made dimensionless by setting

5 H.B. Squire, Proc. Roy. Soc. (London) A142, 621 (1933)

6 C.-S. Yih, Quart. Appl. Math. 12, 434 (1955)

$$(u_i, v_i) = (\tilde{u}_i/\bar{u}_a,\ \tilde{v}_i/\bar{u}_a),\quad (x, y) = (X/d_2, Y/d_2),\quad p_i = \tilde{p}_i/\rho_i \bar{u}_a^2,\quad t = T\bar{u}_a/d_2 .$$

The non-dimensional forms are then:

$$\frac{\partial u_i}{\partial t} + u_i \frac{\partial u_i}{\partial x} + v_i \frac{\partial u_i}{\partial y} = -\frac{\partial p_i}{\partial x} + \sin\theta/F^2 + \Delta u_i/R_i , \tag{14}$$

$$\frac{\partial v_i}{\partial t} + u_i \frac{\partial v_i}{\partial x} + v_i \frac{\partial v_i}{\partial y} = -\frac{\partial p_i}{\partial y} + \cos\theta/F^2 + \Delta u_i/R_i , \tag{15}$$

$$\frac{\partial u_i}{\partial x} + \frac{\partial v_i}{\partial y} = 0 , \tag{16}$$

in which $\Delta \equiv \nabla^2 \equiv \partial^2/\partial x^2 + \partial^2/\partial y^2$.

B. Perturbation Equations

Assuming small perturbations from the basic flow in the form,

$$u_i = U_i + u_i' ,\quad v_i = v_i' ,\quad p_i = P_i + p_i' , \tag{17}$$

in which $P_i = \bar{p}_i/(\rho_i \bar{u}_a^2)$, $U_i = \bar{u}_i/\bar{u}_a$ are the dimensionless basic flow pressures and velocities, and, neglecting second order terms in the primed quantities, and making use of the fact that U_i, P_i satisfy the basic flow equations, we have, upon substitution of (17) into (14), (15) and (16), the linearized equations governing the disturbance

motion,

$$\frac{\partial u_i'}{\partial t} + U_i \frac{\partial u_i'}{\partial x} + \frac{dU_i}{dy} v_i' = -\frac{\partial p_i'}{\partial x} + R_i^{-1} \Delta u_i' , \tag{18}$$

$$\frac{\partial v_i'}{\partial t} + U_i \frac{\partial v_i'}{\partial x} = -\frac{\partial p_i'}{\partial y} + R_i^{-1} \Delta v_i' , \tag{19}$$

$$\frac{\partial u_i'}{\partial x} + \frac{\partial v_i'}{\partial y} = 0 , \tag{20}$$

in which i = 1, or 2. From (20) it is seen at once that there exists a stream function ψ_i, such that

$$u_i' = \frac{\partial \psi_i}{\partial y} , \qquad v_i' = -\frac{\partial \psi_i}{\partial x} .$$

We now assume a sinusoidal disturbance and write

$$\psi_i = \phi_i(y) \exp [i\alpha (x - ct)] , \tag{21}$$

and

$$p_i' = f_i(y) \exp [i\alpha (x - ct)] , \tag{22}$$

in which α is the dimensionless wave number defined by $2\pi d_2/\lambda$, λ being the

wave length, and $c = c_r + ic_i$ is the dimensionless wave velocity. Substitution of (21) and (22) into (18) and (19) yields upon elimination of $f_i(y)$ by cross differentiation, the following two Orr-Sommerfeld equations for the two fluids,

$$\phi_1^{IV} - 2\alpha^2\phi_1'' + \alpha^4\phi_1 = i\alpha R_1\left\{(U_1 - c)(\phi_1'' - \alpha^2\phi_1) - U_1''\phi_1\right\}, \tag{23}$$

in $-\delta \leq y \leq 0$, where the superscripts denote differentiation with respect to y, and

$$\phi_2^{IV} - 2\alpha^2\phi_2'' + \alpha^4\phi_2 = i\alpha R_2\left\{(U_2 - c)(\phi_2'' - \alpha^2\phi_2) - U_2''\phi_2\right\}, \tag{24}$$

in $0 \leq y \leq 1$. The above two equations are now to be solved subject to eight boundary conditions, two at the free-surface, two at the solid boundary and four at the interface. The boundary conditions at the interface form the coupling between $\phi_1(y)$ and $\phi_2(y)$.

C. Boundary Conditions

Before examining the boundary conditions, we need first to study the kinematic conditions at the interface and free-surface. Let the equation of the free-surface be given by $y = -\delta + \xi(x,t)$, and the interface by $y = \eta(x,t)$. The linearized kinematic conditions are then

$$\frac{\partial \xi}{\partial t} + U_1\frac{\partial \xi}{\partial x} = v_1', \qquad \text{at the free-surface,}$$

and $\frac{\partial \eta}{\partial t} + U_2 \frac{\partial \eta}{\partial x} = v_2' = v_1'$, at the interface,

considering ξ, and η to be of the same order as the other perturbation quantities. It then follows that

$$\xi = (\phi_1(-\delta)/c_1) \exp [i\alpha(x-ct)] , \tag{25}$$

where $c_1 \equiv c - U_1(-\delta)$,

and

$$\eta = (\phi_2(0)/c_2) \exp [i\alpha(x-ct)], \tag{26}$$

where $c_2 \equiv c - U_2(0)$.

We now formulate the boundary conditions (details can be found in Kao[7]), bearing in mind that the free-surface conditions are to be applied at $y = -\delta + \xi$, and the interface conditions are to be applied at $y = \eta$. However, since ξ and η are small, we need only take the leading terms, consistent with previous linearization, of the Taylor series expansions of quantities of interest and evaluate them at $y = -\delta$, or $y = 0$.

At the free surface the shear stress must vanish, and the normal stress must balance the normal stress induced by surface tension. Thus we have,

7 T.W. Kao, "Stability of Two-Layer Stratified Flow down an Inclined Plane," Tech. Rep. KH-R-9, W.M. Keck Laboratory of Hydraulics and Water Resources, California Institute of Technology

$$\frac{\partial u_1}{\partial y} + \frac{\partial v_1}{\partial x} = 0 ,$$

$$\left(-p_1 + \frac{2}{R_1}\frac{\partial v_1}{\partial y}\right) + S_1 \frac{\partial^2 \xi}{\partial x^2} = 0 ,$$

where $S_1 \equiv T_1 / (\rho_1 \bar{u}_a^2 d_2)$, T_1 being the surface tension.

To the first order these equations can be written as

(i) $\phi_1''(-\delta) + (\alpha^2 - K\gamma/c_1)\, \phi_1(-\delta) = 0 ,$

(ii) $\{\alpha(\gamma K \cot\theta + \alpha^2 S_1 R_1)/c_1\}\, \phi_1(-\delta) + \alpha(R_1 c_1 + 3i\alpha)\, \phi_1'(-\delta) - i\, \phi_1'''(-\delta) = 0.$

At the interface, the velocity components must be continuous; hence

$$u_1 = u_2 , \qquad v_1 = v_2 ,$$

which, since the basic flow velocity components are equal, yield,

(iii) $\phi_1(0) = \phi_2(0)$,

(iv) $\phi_1'(0) = \phi_2'(0)$.

The shear must also be continuous at the interface; hence

$$\left(\frac{\partial v_1}{\partial x} + \frac{\partial u_1}{\partial y}\right) = \left(\frac{\partial v_2}{\partial x} + \frac{\partial u_2}{\partial y}\right) ,$$

which to the first order is, after some calculations,

(v) $K(1-\gamma)\, \phi_2(0) + c_2\, \phi_1''(0) - c_2\, \phi_2''(0) = 0 .$

The difference of the normal stresses must be balanced by the normal stress induced by surface tension at the interface; hence

$$\left(-p_2 + \frac{2}{R_2}\frac{\partial v_2}{\partial y}\right) - \left(-p_1 + \frac{2}{R_1}\frac{\partial v_1}{\partial y}\right)\gamma + S_2 \frac{\partial^2 \eta}{\partial x^2} = 0 ,$$

where $S_2 \equiv T_2/(\rho_2 \bar{u}_a^2 d_2)$, T_2 being the interfacial surface tension. Again, after some calculations, to the first order, we have,

$$\text{(vi)} \quad c_2(\phi_2'''(0) - \phi_1'''(0)) + (1-\gamma)\, i\alpha R_2 c_2 [c_2 \phi_1'(0) - K\gamma\delta\phi_1(0)] +$$

$$+ i\alpha [K(1-\gamma)\cot\theta + \alpha^2 S_2 R_2]\, \phi_1(0) = 0 .$$

At the solid boundary, $y = 1$, we have $u' = 0$, $v' = 0$. Thus

$$\text{(vii)} \quad \phi_2(1) = 0 ,$$

$$\text{(viii)} \quad \phi_2'(1) = 0 .$$

D. Eigenvalue Problem

Equation (23) and (24) together with boundary conditions (i) to (viii) is the eigenvalue problem we wish to solve with c as the eigenvalue. The general solutions of (23) and (24) will contain eight arbitrary constants. The substitution of these solutions into the eight homogeneous boundary conditions will yield eight homogeneous algebraic equations for the eight constants. The vanishing of the determinant of the coefficients will then give the secular equation of the form

$$F(\alpha, R_1, \gamma, \delta, \theta, c) = 0 ,$$

or

$$c = c(\alpha, R_1, \gamma, \delta, \theta),$$

from which the eigenvalue is determined with $c_i > 0$ representing growing disturbances, and $c_i < 0$ representing damped disturbances, and $c_i = 0$ representing neutral oscillations. Since this relationship is complex, it can be resolved into the relationships

$$c_r = c_r(\alpha, R_1, \gamma, \delta, \theta),$$

and

$$c_i = c_i(\alpha, R_1, \gamma, \delta, \theta).$$

Setting $c_i = 0$, we obtain a relationship between α (wave number) and R_1 (Reynolds number) for given values of γ (density ratio), δ (depth ratio) and θ (slope angle). This relationship between α and R_1 represents a curve in the α-R_1 plane, which is the curve of neutral stability. We note further that the special case $\gamma = 1$, $\delta = 0$, $S_2 = 0$, corresponds to a one-layered homogeneous system, which has been treated by Benjamin[3] and Yih[4]. In subsequent calculations this limiting case will be calculated and the results checked with those obtained by Benjamin and Yih.

4. SOLUTION OF THE EIGENVALUE PROBLEM

Direct solution by series method is very lengthy. However, useful information can be obtained by examining suitable asymptotic limits. In particular we shall seek asymptotic solutions for two cases: (A). case for long waves (small α); and (B). case for short waves (large α). It will be seen that most of the relevant information that we desire can be extracted from these two cases.

A. Case for Long Waves (Small α)

The stability of the system with respect to long waves will be examined both with respect to surface waves and shear waves. Yih's[4] perturbation procedure, which leads to a study of surface waves, will be used. It is to be noted that this is a "regular" perturbation procedure and does not introduce any difficulty usually encountered in the study of hydrodynamic stability problems for high Reynolds number where the asymptotic solutions are obtained by a "singular" perturbation procedure.

We introduce perturbation series of the form

$$\phi_1 = \phi_{10} + \phi_{11} + \phi_{12} + \ldots \tag{27}$$

$$\phi_2 = \phi_{20} + \phi_{21} + \phi_{22} + \ldots \tag{28}$$

$$c = c_0 + \Delta c + \Delta^2 c + \ldots \tag{29}$$

where

$$\phi_{10}, \phi_{20}, c_0 \sim O(\alpha^0); \quad \phi_{11}, \phi_{21}, \Delta c \sim O(\alpha); \quad \phi_{12}, \phi_{22}, \Delta^2 c \sim O(\alpha^2); \quad \text{etc.}$$

(a) Zeroth Order Solution

Substitution of (27), (28), and (29) into (23) and (24) and (i) to (viii) and collecting terms of order α^0, yields

$$\phi_{10}^{IV} = 0 , \qquad -\delta \leq y \leq 0, \tag{30}$$

$$\phi_{20}^{IV} = 0 , \qquad 0 \leq y \leq 1, \tag{31}$$

(i) $\phi_{10}''(-\delta) - (K\gamma/c_{10})\,\phi_{10}(-\delta) = 0,$

(ii) $\phi_{10}'''(-\delta) = 0,$

(iii) $\phi_{10}(0) - \phi_{20}(0) = 0,$

(iv) $\phi_{10}'(0) - \phi_{20}'(0) = 0,$

(v) $K(1-\gamma)\,\phi_{20}(0) + c_{20}\,\phi_1''(0) - c_{20}\,\phi_2''(0) = 0,$

(vi) $\phi_{20}'''(0) - \phi_{10}'''(0) = 0,$

(vii) $\phi_{21}(1) = 0,$

(viii) $\phi_{21}'(1) = 0,$

where $c_{10} = c_o - U_1(-\delta)$ and $c_{20} = c_o - U_2(0)$. It is to be noted that in this reduced zeroth order eigenvalue problem, the eigenvalue no longer appears in the differential equation so that no information can be obtained regarding shear waves. The shear waves will be examined separately in a separate calculation below in subsection (c).

The solution of this eigenvalue problem is straightforward. After some calculations, we find that the wave velocity, c_o, is

$$c_0 = (K/4)(3 + 6\gamma\delta + 2\gamma\delta^2) \pm \sqrt{(1/4 + \gamma^2\delta^4 + 2\gamma^2\delta^3 + 3\gamma^2\delta^2 + \gamma\delta - \gamma\delta^2)}, \tag{32}$$

The corresponding eigenfunctions determined up to a multiplicative constant, which can be chosen to be unity without loss of generality, are

$$\phi_{10} = \left\{ 1 - 2y + \frac{\gamma(1 + 2\delta)y^2}{\frac{1}{2}(1 + 2\gamma\delta - 2\gamma\delta^2) \pm \sqrt{(1/4 + \gamma^2\delta^4 + 2\gamma^2\delta^3 + 3\gamma^2\delta^2 + \gamma\delta - \gamma\delta^2)}} \right\}, \tag{33}$$

and

$$\phi_{20} = (1 - y)^2 . \tag{34}$$

We note that the quantity under the radical is positive definite for any value of δ. This can be shown as follows: for $0 < \delta \leq 1$, this is obvious. For $\delta > 1$, the quantity can be written as

$$1/4 - [\gamma(\delta^2 - \delta) - \gamma^2(\delta^4 + 2\delta^3 + 3\delta^2)] .$$

The expression in the square bracket attains a maximum at

$$\gamma = (\delta^2 - \delta)/(2\delta^4 + 4\delta^3 + 6\delta^2),$$

and equals

$$(\delta^2 - \delta)^2/(4\delta^4 + 8\delta^3 + 12\delta^2),$$

which is always less than 1/4 for $\delta > 1$. This concludes the demonstration.

It then follows that c_o is real for wave number $\alpha = 0$, which means that the line $\alpha = 0$ in the $\alpha - R_1$ plane is part of the neutral curve whatever the value of γ, δ, θ, and R_1. This is a very useful and welcome piece of information, for it shows that neutral oscillations can exist right down to Reynolds number $R_1 = 0$.

So far we have not yet discussed the sign in front of the radical for the eigenvalue in equation (32). It appears that the plus and minus signs correspond to two different modes of waves. If both of these eigenvalues were admissible for our calculation of the neutral curve, then there would be two neutral curves in the $\alpha - R_1$ plane, one corresponding to each mode in contradiction to the general problem set forth in Section 3. One of the modes is thus inadmissible for such calculation.

We observe that for the special case of homogeneous fluid ($\gamma = 1$, $\delta = 0$), we recover the results of Benjamin and Yih, i.e., $c_o = 3$, $\phi_{10} = \phi_{20} = (1 - y)^2$, only when the positive sign is taken in front of the radical. Hence the positive sign is the one that is to be used for subsequent calculations.

The radio of the amplitudes of the free-surface and interface, r, is given by

$$r = \frac{\phi_{10}(-\delta)/c_{10}}{\phi_{20}(0)/c_{20}},$$

where

$$c_{10} = (K/4)(1+2\gamma\delta) + (K/2)\sqrt{(1/4 + \gamma^2\delta^4 + 2\gamma^2\delta^3 + 3\gamma^2\delta^2 + \gamma\delta - \gamma\delta^2)},$$

$$c_{20} = (K/4)(1+2\gamma\delta+2\gamma\delta^2) + (K/2)\sqrt{(1/4 + \gamma^2\delta^4 + 2\gamma^2\delta^3 + 3\gamma^2\delta^2 + \gamma\delta - \gamma\delta^2)}.$$

Therefore

$$r = \left[1 + 2\delta + \frac{\gamma(1+2\delta)\delta^2}{\frac{1}{2}(1+2\gamma\delta-2\gamma\delta^2)+\sqrt{(\frac{1}{4}+\gamma^2\delta^4+2\gamma^2\delta^3+\gamma\delta-\gamma\delta^2)}} \right](c_{20}/c_0). \quad (35)$$

It is easily seen that r is positive definite for $\gamma \leq 1$ and all δ ; since $\sqrt{(\frac{1}{4}+\gamma^2\delta^4+2\gamma^2\delta^3+3\gamma^2\delta^2+\gamma\delta-\gamma\delta^2)}$ is positive definite as shown earlier, and $\frac{1}{2}(1+2\gamma\delta-2\gamma\delta^2) + \sqrt{(\frac{1}{4}+\gamma^2\delta^4+2\gamma^2\delta^3+3\gamma^2\delta^2+\gamma\delta-\gamma\delta^2)}$ is never equal to zero. It may be of interest to record here that when the negative sign is used in front of the radical, calculations have shown that r would be negative, indicating an oscillation 180° out of phase.

(b) First Order Solution

The first order approximation is obtained by collecting terms of order α^1, which yields the following non-homogeneous differential system. The Orr-Sommerfeld equation now becomes,

$$\phi_{11}^{IV} = i\alpha R_1 \{(U_1 - c_0)\phi_{10}'' - U_1''\phi_{10}\}, \quad -\delta \leq y \leq 0, \quad (36)$$

$$\phi_{21}^{IV} = i\alpha R_2 \{(U_2 - c_0)\phi_{20}'' - U_2''\phi_{20}\}, \quad 0 \leq y \leq 1. \quad (37)$$

In these equations the right-hand sides, of course, are known.

The boundary conditions are now

(i) $\phi_{11}''(-\delta) - (K\gamma/c_{10})\,\phi_{11}(-\delta) = -[K\gamma\Delta c/(c_{10})^2]\,\phi_{10}(-\delta)$,

(ii) $\phi_{11}'''(-\delta) = -i\alpha\left\{[(\gamma K\cot\theta + \alpha^2 S_1 R_1)/c_{10}]\,\phi_{10}(-\delta) + R_1 c_{10}\,\phi_{10}'(-\delta)\right\}$,

(iii) $\phi_{11}(0) - \phi_{21}(0) = 0$,

(iv) $\phi_{11}'(0) - \phi_{21}'(0) = 0$,

(v) $K(1-\gamma)\,\phi_{21}(0) + c_{20}[\phi_{11}''(0) - \phi_{21}''(0)] = \Delta c\,[\phi_{20}''(0) - \phi_{10}''(0)]$,

(vi) $\phi_{21}'''(0) - \phi_{11}'''(0) = i\alpha[-(1-\gamma)R_2\{c_{20}\,\phi_{10}'(0) - K\gamma\delta\,\phi_{10}(0)\} -$

$- \{(K(1-\gamma)\cot\theta + \alpha^2 S_2 R_2)/c_{20}\}\,\phi_{10}(0)]$,

(vii) $\phi_{21}(1) = 0$,

(viii) $\phi_{21}'(1) = 0$.

It will now be noted that the left-hand side of this system has the same form as the left-hand side of the zeroth order system as it should be from the theory of regular perturbation analysis. The general solutions ϕ_{11} and ϕ_{21} can again be determined at once by direct integration, and there will again appear eight arbitrary constants. Substitution of ϕ_{11} and ϕ_{21} into the boundary conditions yields eight linear non-homogeneous algebraic equations with the eight constants as unknowns. The determinant of the coefficient is now known to be zero, since they are the same as the zeroth order calculation with c_0 assuming the value determined previously. Thus Δc can be calculated.

The calculations involved are very lengthy. (For details of the calculation, see Kao.[7]) The final result is

$$\Delta c = i\alpha \left\{ (G/H) R_1 - [(\Phi/H)\cot\theta + (\Lambda/H)\alpha^2] \right\}, \tag{38}$$

where

$$G = \{ 2c_{10}c_{20}[(6c_{10}\delta - K\gamma\delta^3)(-\delta^2 A/12 - c_{10}\phi_{10}'(-\delta)/6) - (K\gamma A\delta^5/30 - c_{10}A\delta^3/3)] -$$

$$-[2c_{10}c_{20}K\gamma + c_{10}K(1-\gamma)(2c_{10} - K\gamma\delta^2)].[(1/\gamma)(K(\gamma\delta+1)/15 + A\delta/8) + A\delta^2/6 +$$

$$+ c_{10}\phi_{10}'(-\delta)/3 + (1-\gamma)(c_{20}\phi_{10}'(0) - K\gamma\delta)/3\gamma] - 2c_{10}c_{20}K\gamma\delta\,[(1/\gamma)(K(\gamma\delta+1)/12 +$$

$$+ A\delta/6) + A\delta^2/4 + c_{10}\phi_{10}'(-\delta)/2 + (1-\gamma)(c_{20}\phi_{10}'(0) - K\gamma\delta)/2\gamma] \},$$

$$\Phi = (c_{20}/3)(6c_{10}\delta - K\gamma\delta^2)K\gamma\,\phi_{10}(-\delta) + [\{2c_{20}K\gamma + K(1-\gamma)(2c_{10} - K\gamma\delta^2)\}/3 +$$

$$+ K\gamma\delta c_{20}].[K\gamma\,\phi_{10}(-\delta) + c_{10}K(1-\gamma)/c_{20}],$$

$$H = c_{10}(2c_{10} - K\gamma\delta^2)(\phi_{20}''(0) - \phi_{10}''(0)) + 2c_{20}K\gamma\,\phi_{10}(-\delta),$$

$$A = 2K\gamma + \frac{2K\gamma^2\delta(1+2\gamma\delta)}{\frac{1}{2}(1+2\gamma\delta-2\gamma\delta^2) + \sqrt{(\frac{1}{4} + \gamma^2\delta^4 + 2\gamma^2\delta^3 + 3\gamma^2\delta^2 + \gamma\delta - \gamma\delta^2)}},$$

$$\Lambda = \{(1/3)c_{20}(6c_{10}\delta - K\gamma\delta^2)K\gamma\,\phi_{10}(-\delta)S_1R_1 + [\tfrac{1}{3}(2c_{10}c_{20}K\gamma +$$

$$+ c_{10}K(1-\gamma)(2c_{20} - K\gamma\delta^2)) + K\gamma\delta c_{10}c_{20}].[(K\gamma\,\phi_{10}(-\delta)/c_{10})S_1R_1 +$$

$$+ (K(1-\gamma)/c_{20})S_2R_2]\}.$$

Since G, Φ, H, Λ, and A are all real for given values of γ and δ, it then follows that Δc is purely imaginary. Moreover, numerical computations indicate that G, Φ, and H are all positive. Thus $\Delta c = ic_i$, and c_i will increase or decrease from zero when α

increases from zero, according as

$$R_1 > (\Phi/G)\cot\theta \,, \qquad \text{or} \qquad R_1 < (\Phi/G)\cot\theta \,. \tag{39}$$

Hence, the neutral stability curve has a bifurcation point on $\alpha = 0$, at $R_1 = (\Phi/G)\cot\theta$.

For the special case when $\gamma = 1$, $\delta = 0$, and $S_2 = 0$, we have $R_1 = R_2 = R$, and

$$c_i = 6\alpha R/5 - \alpha(3\cot\theta + \alpha^2 SR)/3 \,,$$

recovering the result given by Yih[4].

The numerical results obtained for the two-layered system will be discussed in detail in Section 5 below.

(c) Shear Waves

In order to complete the stability study for long waves, we must next investigate the shear waves, which, as noted at the beginning of this section have been dropped out of the calculations. In order to include these waves, we must now assume that although α is small αc is not small. The Orr-Sommerfeld equations then become

$$\phi_1^{IV} + i\alpha R_1 c\, \phi_1'' = 0 \,, \tag{40}$$

$$\phi_2^{IV} + i\,(\alpha R_1 c/\gamma)\, \phi_2'' = 0 \,, \tag{41}$$

and the boundary conditions are now

(i) $\phi_1''(-\delta) = 0$,

(ii) $\beta^2 \phi_1'(-\delta) - \phi_1'''(-\delta) = 0$,

(iii) $\phi_1(0) - \phi_2(0) = 0$,

(iv) $\phi_1'(0) - \phi_2'(0) = 0$,

(v) $\phi_1''(0) - \phi_2''(0) = 0$,

(vi) $\phi_2'''(0) - \phi_1'''(0) - \left(\frac{1-\gamma}{\gamma}\right)\beta^2 \phi_1'(0) = 0$,

(vii) $\phi_2(1) = 0$,

(viii) $\phi_2'(1) = 0$,

where we have written β^2 for $-i\alpha R_1 c$. This again is a homogeneous differential system with c as the eigenvalue. The general solutions of (40) and (41) are

$$\phi_1 = A_1 + B_1 y + C_1 e^{\beta y} + D_1 e^{-\beta y}, \tag{42}$$

$$\phi_2 = A_2 + B_2 y + C_2 e^{\beta y/\sqrt{\gamma}} + D_2 e^{-\beta y/\sqrt{\gamma}}, \tag{43}$$

Where A_1, A_2, B_1, B_2, C_1, C_2, D_1, D_2 are eight arbitrary constants. Substitution of (42) and (43) into the eight homogeneous boundary conditions (i) through (viii) once more yields a system of eight homogeneous linear algebraic equations to determine the eight arbitrary constants. In order to have non-trivial solutions, the determinant of the coefficients must vanish, which gives the secular equation to determine c. After some straightforward calculations, we obtain the following secular equation governing c:

$$\cosh(\beta/\sqrt{\gamma}) \cosh \beta\delta + \sqrt{\gamma} \sinh(\beta/\sqrt{\gamma}) \sinh \beta\delta = 0. \tag{44}$$

For the limiting case $\gamma = 1$, $\delta = 0$, equation (44) becomes

$$\cosh \beta = 0 ,$$

recovering the result for a one-layered homogeneous fluid.* Since c is in general complex β is complex. Separating into real and imaginary parts $\beta = \beta_r + i\beta_i$ we have, from (44), that

$$\cosh(\beta_r/\sqrt{\gamma}) \cosh \delta\beta_r \left[(1/\sqrt{\gamma}) \cos(\beta_i/\sqrt{\gamma}) \cos \delta\beta_i - \sin(\beta_i/\sqrt{\gamma}) \sin \delta\beta_i \right] -$$
$$- \sinh(\beta_r/\sqrt{\gamma}) \sinh \delta\beta_r \left[(1/\sqrt{\gamma}) \sin(\beta_i/\sqrt{\gamma}) \sin \delta\beta_i - \cos(\beta_i/\sqrt{\gamma}) \cos \delta\beta_i \right] = 0 ,$$

$$\sinh(\beta_r/\sqrt{\gamma}) \cosh \delta\beta_r \left[(1/\sqrt{\gamma}) \sin(\beta_i/\sqrt{\gamma}) \cos \delta\beta_i + \sin \delta\beta_i \cos(\beta_i/\sqrt{\gamma}) \right] +$$
$$+ \sinh \delta\beta_r \cosh(\beta_r/\sqrt{\gamma}) \left[(1/\sqrt{\gamma}) \sin \delta\beta_i \cos(\beta_i/\sqrt{\gamma}) + \sin(\beta_i/\sqrt{\gamma}) \cos \delta\beta_i \right] = 0 .$$

The roots are then given by $\beta_r = 0$, and β_i satisfying

$$(1/\sqrt{\gamma}) \cos(\beta_i/\sqrt{\gamma}) \cos \delta\beta_i - \sin(\beta_i/\sqrt{\gamma}) \sin \delta\beta_i = 0 ,$$

or

$$\tan(\beta_i/\sqrt{\gamma}) \tan \delta\beta_i = 1/\sqrt{\gamma} . \tag{45}$$

There is a denumerably infinite number of real roots for (45), all non-zero. Thus β is purely imaginary. Hence β^2 is always a negative number, say $-M^2$, where M^2 is

* Yih's result for this case contains a minor algebraic error. His conclusions, however, are unaffected by this error.

positive. Hence, $\alpha R_1(c_r + ic_i) = i\beta^2$, or $\alpha R_1 c_i = -M^2$, showing the damped nature of the shear waves.

It is now safe to conclude that the stability for long waves is indeed governed by surface waves.

B. Case for Short Waves (Large α)

For any finite Reynolds number, and for α very large, and provided c is small compared with α, (more precisely of order α^{-2}), the asymptotic form of the Orr-Sommerfeld equations can be written as

$$\phi_1^{iv} - 2\alpha^2\phi_1'' + \alpha^4\phi_1 = 0, \qquad -\delta \leq y \leq 0, \tag{46}$$

$$\phi_2^{iv} - 2\alpha^2\phi_2'' + \alpha^4\phi_2 = 0, \qquad 0 \leq y \leq 1. \tag{47}$$

with the boundary conditions

(i) $\phi_1''(-\delta) + (\alpha^2 - K\gamma/c_1)\,\phi_1(-\delta) = 0,$

(ii) $-\{i\alpha(\gamma K \cot\theta + \alpha^2 S_1 R_1)/c_1\}\,\phi_1(-\delta) + 3\alpha^2\phi_1(-\delta) - \phi_1'''(-\delta) = 0,$

(iii) $\phi_1(0) - \phi_2(0) = 0,$

(iv) $\phi_1'(0) - \phi_2'(0) = 0,$

(v) $K(1-\gamma)\,\phi_2(0) + c_2\,\phi_1''(0) - c_2\,\phi_2''(0) = 0,$

(vi) $c_2\,[\phi_2'''(0) - \phi_1'''(0)] + i\alpha\,[K(1-\gamma)\cot\theta + \alpha^2 S_2 R_2]\,\phi_1(0) = 0,$

(vii) $\phi_2(1) = 0$,

(viii) $\phi_2'(1) = 0$.

The above eigenvalue problem, with c as the eigenvalue, is true even for the Reynolds number approach or equal to zero. Since as $R_1 \rightarrow 0$, $R_2 \rightarrow 0$ and $\bar{u}_a \rightarrow 0$ for finite μ. But $\mu \bar{u}_a = \rho_2 g \sin\theta d_2^2 / K$ is finite. Hence $S_1 R_1 = T_1/\mu \bar{u}_a$, and $S_2 R_2 = T_2/\mu \bar{u}_a$ are finite quantities even for R_1 and R_2 approaching zero or in the limit equal to zero.

The solutions for (46) and (47) are,

$$\phi_1 = A_1 e^{\alpha y} + B_1 e^{-\alpha y} + C_1 y e^{\alpha y} + D_1 y e^{-\alpha y}, \tag{48}$$

and

$$\phi_2 = A_2 e^{\alpha y} + B_2 e^{-\alpha y} + C_2 y e^{\alpha y} + D_2 y e^{-\alpha y}. \tag{49}$$

From the boundary conditions, we once more obtain a secular equation by setting the determinant of the coefficients of A_1, A_2, B_1, B_2, C_1, C_2, D_1, D_2 to zero. After some straightforward substitution we obtain the following 8 x 8 determinantal equation:

$$
\begin{vmatrix}
(2\alpha^2-K\gamma/c_1)e^{-\alpha\delta} & (2\alpha^2-K\gamma/c_1)e^{\alpha\delta} & [2\alpha-(2\alpha^2-K\gamma/c_1)\delta]e^{-\alpha\delta} & [-2\alpha-(2\alpha^2-K\gamma/c_1)\delta]e^{\alpha\delta} & 0 & 0 & 0 & 0 \\
(-i\alpha M/c_1+2\alpha^3)e^{-\alpha\delta} & (-i\alpha M/c_1-2\alpha^3)e^{\alpha\delta} & (i\alpha M/c_1-2\alpha^3)\delta e^{-\alpha\delta} & (i\alpha M/c_1+2\alpha^3)\delta e^{\alpha\delta} & 0 & 0 & 0 & 0 \\
1 & 1 & 0 & 0 & -1 & -1 & 0 & 0 \\
\alpha & -\alpha & 1 & 1 & -\alpha & \alpha & -1 & -1 \\
\alpha^2 c_2 & \alpha^2 c_2 & 2\alpha c_2 & -2\alpha c_2 & [K(1-\gamma)-\alpha^2 c_2] & [K(1-\gamma)-\alpha^2 c_2] & -2\alpha c_2 & 2\alpha c_2 \\
(i\alpha N-\alpha^3 c_2) & (i\alpha N+\alpha^3 c_2) & -3\alpha^2 c_2 & -3\alpha^2 c_2 & \alpha^3 c_2 & -\alpha^3 c_2 & 3\alpha^2 c_2 & 3\alpha^2 c_2 \\
0 & 0 & 0 & 0 & e^{\alpha} & e^{-\alpha} & e^{\alpha} & e^{-\alpha} \\
0 & 0 & 0 & 0 & \alpha e^{\alpha} & -\alpha e^{-\alpha} & (1+\alpha)e^{\alpha} & (1-\alpha)e^{-\alpha}
\end{vmatrix} = 0, \tag{50}
$$

with M written for $(\gamma K \cot\theta + \alpha^2 S_1 R_1)$, and N for $[K(1-\gamma)\cot\theta + \alpha^2 S_2 R_2]$, and

$$K = (1+\delta)/[\gamma(\delta/2 + \delta^2 + \delta^3/3) + (1/3 + \delta/2)],$$

$$c_1 = c - (K/2)(1+2\gamma\delta+\gamma\delta^2),$$

and $c_2 = c - (K/2)(1+2\gamma\delta)$, as before.

The expansion of the determinant will then yield an algebraic equation to determine c. However, this process is very laborious, and since our interest is in the value of c when α is large, we need only take a look at the roots of c as $\alpha \to \infty$. The determinant,

on expansion and taking the limit as $\alpha \to \infty$, gives

$$2\alpha\delta \cosh\alpha\delta \sinh^2\alpha\delta \left(\sinh\alpha\delta + \cosh\alpha\delta\right)\left(i\alpha^2 S_1 R_1 + 2\alpha^2 c_1\right)\left(i\alpha^2 S_2 R_2 + 2\alpha^2 c_2\right) = 0 , \qquad (51)$$

Hence as $\alpha \to \infty$,

$$c \to (K/2)(1 + 2\gamma\delta + \gamma\delta^2) - \tfrac{1}{2} i S_1 R_1 ,$$

or

$$c \to (K/2)(1 + 2\gamma\delta) - \tfrac{1}{2} i S_2 R_2 .$$

Now since S_1 and S_2 are positive for non-zero surface tension, therefore very short waves are damped by surface tension. On the other hand since S_1R_1 and S_2R_2 vary inversely as μ , viscosity reduces the rate of damping, a fact pointing to the dual role of viscosity noted by Yih[4].

From the above discussion for the asymptotic solutions for long waves and short waves, the general trend of the neutral stability curve is determined. A typical sketch of a neutral stability curve is shown in Figure 2. Detailed calculations for part of the neutral curve for long waves are discussed in Section 6.

5. THE RELATIVE STABILITY INDEX

A meaningful question to ask with respect to the relative stability of the various flow configurations is this: For the same total depth, how does the stability of flow with stratification compare with the homogeneous case?* We can answer this question by defining a relative stability index, s, as follows:

$$s = \frac{\text{critical depth for two-layer flow for a given } \theta}{\text{critical depth for homogeneous flow for same } \theta}$$

If $s < 1$, the two-layer flow is more unstable than the homogeneous flow. Indeed, if a flow of a homogeneous fluid of depth h is critical, then, when $s < 1$, the replacement of the homogeneous fluid by one with two layers of the same total depth will make the flow unstable. If $s > 1$, the situation is reversed.

From the definition of the Reynolds number R_1, the critical depth for two-layer flow B given by

$$\{ K R_{1cr} \mu^2 (1+\delta)^3 / (\gamma \rho_2^2 g \sin\theta) \}^{1/3} ,$$

and the critical depth for a homogeneous flow is

$$\{ 3 R_{cr} \mu^2 (1+\delta) / (\rho_2^2 g \sin\theta) \}^{1/3} .$$

Therefore

$$s = \{ K R_{1cr} (1+\delta)^2 / 3 R_{cr} \gamma \}^{1/3} .$$

* The author owes to Professor C.-S. Yih of the University of Michigan for posing this question in a private communication.

But since the total depth of the flow is $d_2(1 + \delta)$,

$$R_{cr}(1+\delta) = 5/6.$$

Hence, it follows that

$$s = 0.737\,(1+\delta)\,(K R_{1cr}/\gamma)^{1/3}.$$

A graph of s against δ for various values of γ is included and discussed in the next section.

6. DISCUSSION OF GRAPHS

From the algebraic results obtained in Section 4 for the long waves, numerical results are easily computed and presented in the form of graphs as shown in Figures 3 through 8. In this section we shall discuss these graphs.

Figure 3 shows the variation of wave speed c_o with depth ratio δ for different values of the density ratio γ for the limiting case of long waves. For small density differences ($\gamma \simeq 1$), the wave speed remains essentially constant and equal to 3, the wave speed for the homogeneous one-layered flow. For larger and larger density differences (decreasing γ) the wave speed is reduced more and more; the greatest reduction occurring when the depth of the upper fluid is from one to two times larger than the depth of the lower fluid. As the depth of the upper fluid becomes much larger than the depth of the lower fluid ($\delta \gg 1$), the wave speed goes asymptotically to 3 as is to be expected since the disturbance is mainly associated with the free-surface.

Figure 4 shows that for long waves the ratio of the amplitudes of the free surface and interface, r, increases as the depth ratio $\delta = d_1/d_2$ increases, and is quite insensitive to the ratio of densities. This is to be expected since the two surface oscillations are in phase with each other and the mode represents mainly a free surface mode.

Figure 5 gives the critical Reynolds number as a function of the depth ratio and density ratio based on computed bifurcation point of the neutral curve on $\alpha = 0$. It should be noted that critical Reynolds number still exists for the density of the upper fluid greater than that of the lower fluid, so that the flow can still be stable. This is due to the stabilizing effect of viscosity.

Figure 6 gives the plot of the relative stability index s against the ratio of depths for various values of the ratio of density. It can be noted that $\gamma = 1$ gives a constant $s = 1$, as it should be, of course. This line marks the region of relative stability and instability. It is seen that if the density of the upper layer is smaller than that of the lower layer the effect of stratification is to make the flow more stable. This confirms our intuitive idea of the stabilizing effect of stratification of this kind. On the other hand, if the upper layer is of higher density than the lower fluid, the flow is more unstable than the homogeneous fluid. The stability is now actually governed by the location of the interface and the ratio of the densities. The potential energy required to distort the interface becomes smaller and smaller as the ratio of densities become higher and higher and hence the flow becomes more and more unstable. Hence, the more the difference in density, the more the stabilizing or destabilizing effect depending on whether ρ_1 is less than or greater than ρ_2. These arguments are borne out by the calculations and can be seen from the graphs in this figure.

Figure 7 shows a typical plot of curves of constant c_i for small wave number (long waves) and small Reynolds numbers. They exhibit the expected behavior: c_i increases for larger values of the wave number and Reynolds number. For long waves the stabilizing influence of surface tension on the curves of constant growth rate is small, and does not affect these curves appreciably.

Figure 8 shows the effect of surface tension on the neutral curve for small wave numbers and small Reynolds numbers. It is assumed for convenience that the surface tension parameters S_1R_1 and S_2R_2 are equal. It can be seen that surface tension has a stabilizing effect for this range of α and R_1, and reduces the range of α for which instability occurs for any constant R_1.

7. SUMMARY OF CONCLUSIONS

The relevant results of this study will now be summarized.

(a) The axis $\alpha = 0$ in the $\alpha - R_1$ plane is part of the neutral stability curve, showing that neutral oscillation can exist right down to $R_1 = 0$.

(b) There exists a bifurcation point of the neutral stability curve on $\alpha = 0$, which marks the critical Reynolds number above which there are unstable disturbances.

(c) For a two-layer flow in which the density of the upper fluid is higher than that of the lower fluid, critical Reynolds number can still be found. This is due to the stabilizing effect of viscosity.

(d) Stratification can be stabilizing or destabilizing depending on whether the density of the upper layer is less than or greater than the density of the lower layer. The more the stabilizing or destabilizing effect, the more the difference in densities.

(e) The source of instability lies in the introduction of the interface.

(f) For long waves, the stabilizing influence of surface tension on curves of constant growth rate is small.

(g) Surface tension has a stabilizing effect for long waves and small Reynolds number.

ACKNOWLEDGEMENTS

The author wishes to thank Professor N.H. Brooks of the California Institute of Technology for his encouragement during the course of this investigation. He is also indebted to Loh-Nien Fan for his assistance in computing the curves in Figures 3, 4, 5, 7, and 8. The project was supported by the U.S. Public Health Service Grant WP-00428. Some additional work was done at the Department of Space Science and Applied Physics, The Catholic University of America, under the sponsorship of NASA Contract No. NSG 586.

LIST OF FIGURES

Figure	Title
1	Two-layered flow down an inclined plane (a) Unperturbed basic flow, (b) Disturbed flow
2	Free sketch of neutral curve
3	Wave speed of long waves for constant density ratios
4	Variation of amplitude ratio with depth ratio (δ) for constant density ratio (γ) for the limiting case of long waves
5	Critical Reynolds number (R_1) as a function of depth ratio δ and density ratio γ, based on computed bifurcation point of neutral curve on $\alpha = 0$.
6	Relative stability index (s) as a function of depth ratio δ and density ratio γ.
7	Computed curves of constant c_i for $\gamma = 0.9$, $\delta = 1.0$, $\theta = 30^\circ$, $S_1R_1 = S_2R_2 = 0.10$
8	Curves of neutral stability for various values of surface tension parameter, S_1R_1, for $\gamma = 0.9$, $\delta = 1.0$, $\theta = 30^\circ$

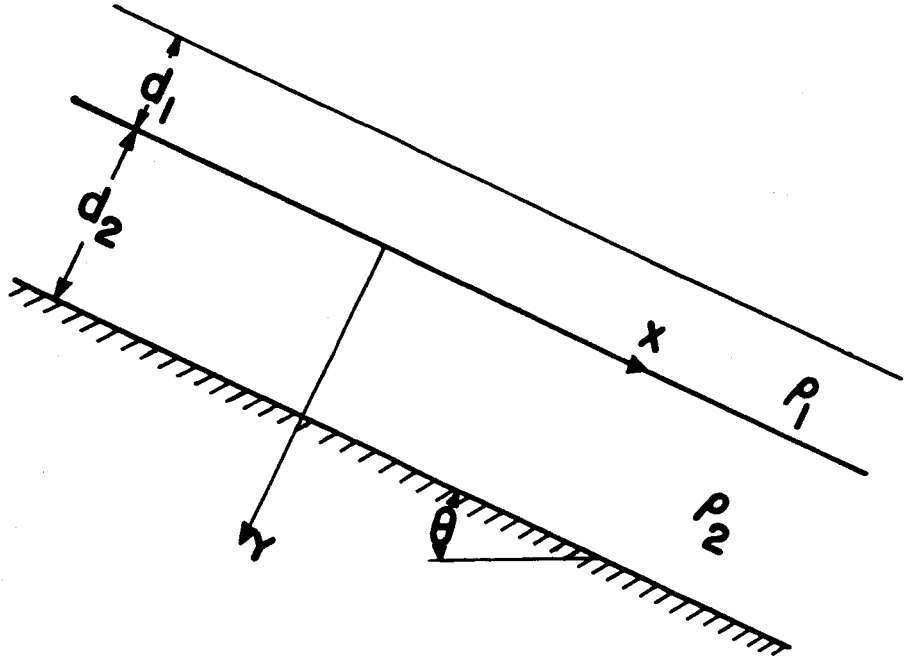
d_1
d_2
x
ρ_1
ρ_2
y
θ

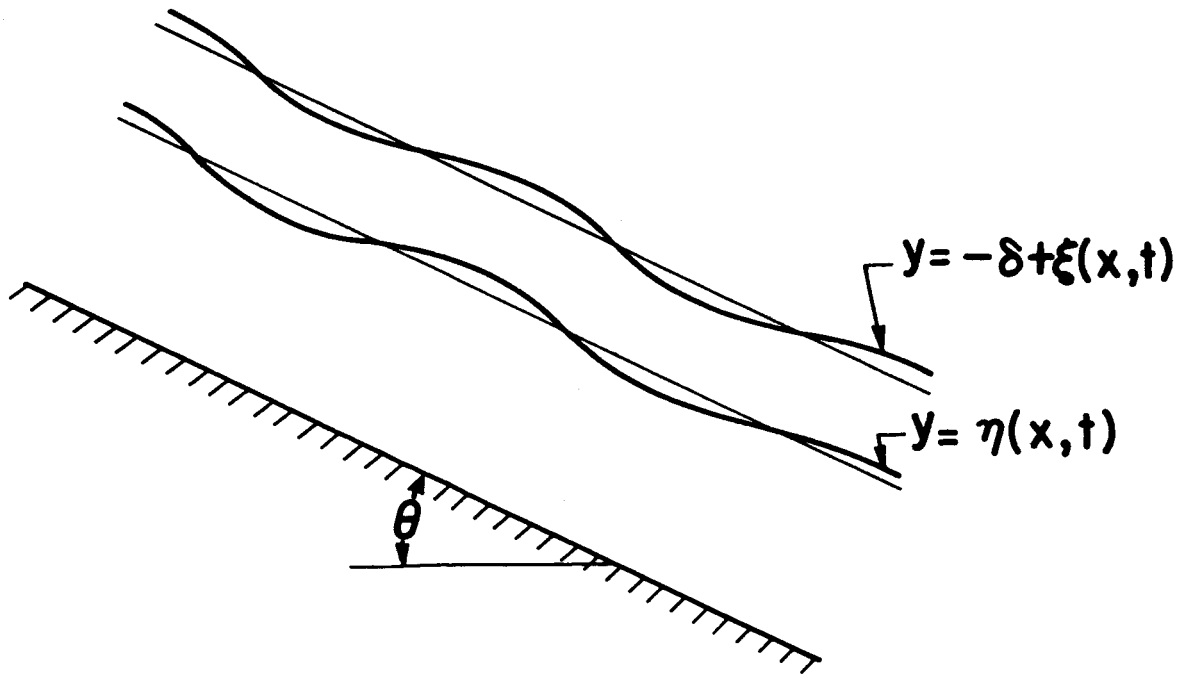
$y = -\delta + \xi(x,t)$
$y = \eta(x,t)$
θ

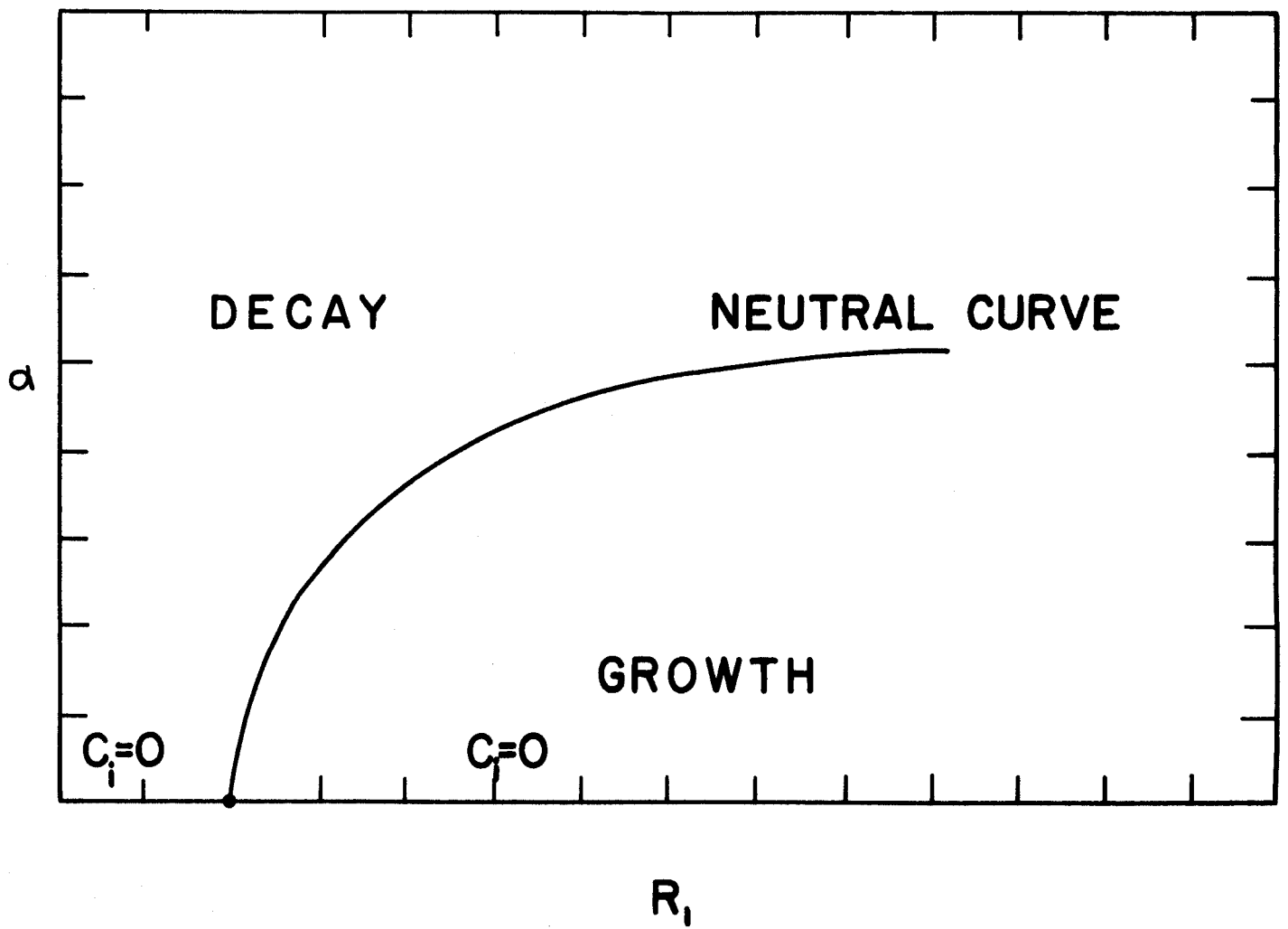
DECAY
NEUTRAL CURVE
GROWTH
$C_i=0$
$C_i=0$
α
R_1

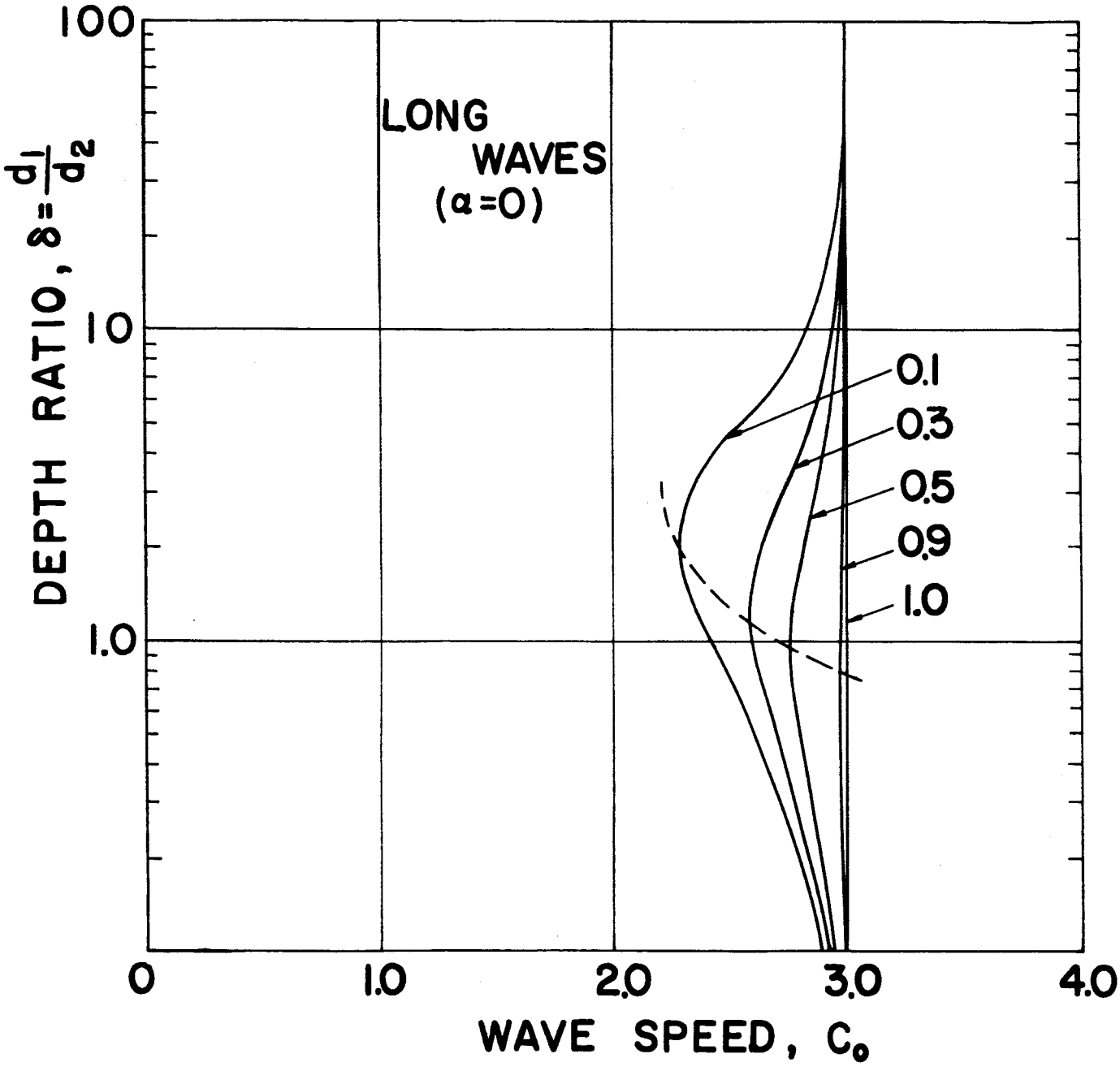
LONG
WAVES
(α=0)
0.1
0.3
0.5
0.9
1.0
100
10
1.0
0
1.0
2.0
3.0
4.0
DEPTH RATIO, δ = d1/d2
WAVE SPEED, C0

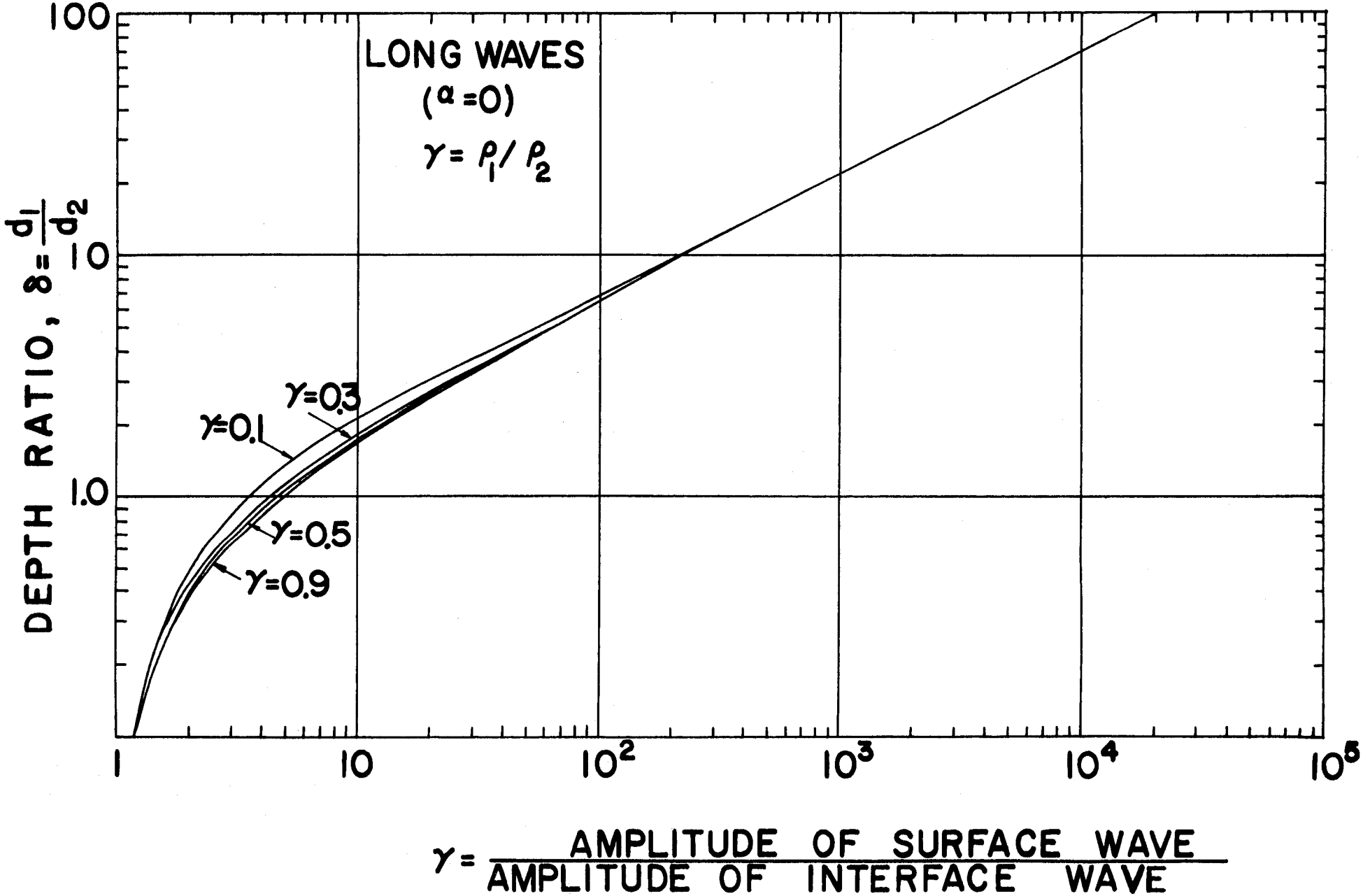
LONG WAVES
(α = 0)
γ = ρ1/ρ2
γ=0.1
γ=0.3
γ=0.5
γ=0.9
DEPTH RATIO, δ = d1/d2
100
10
1.0
1
10
10²
10³
10⁴
10⁵
γ = AMPLITUDE OF SURFACE WAVE / AMPLITUDE OF INTERFACE WAVE

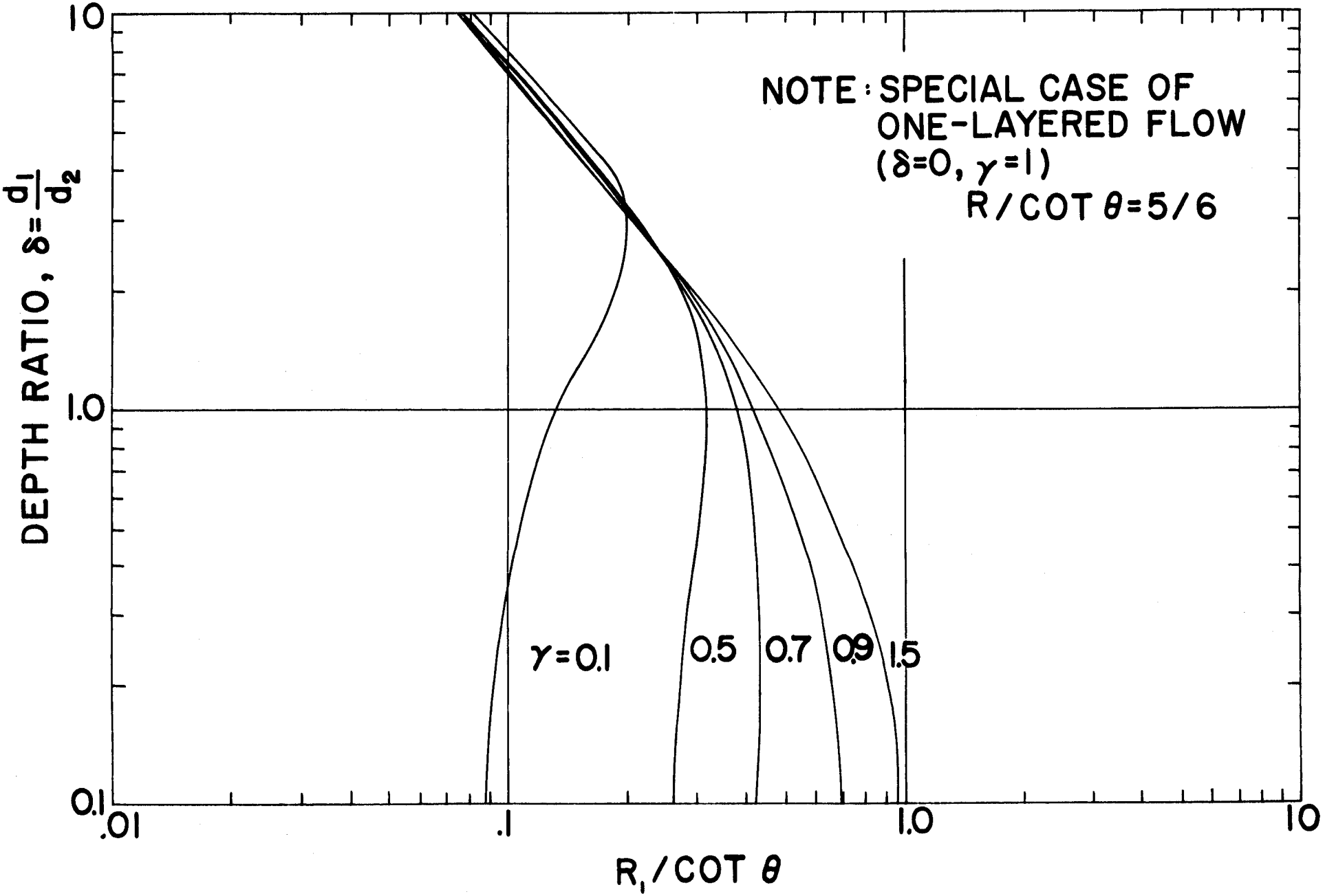
NOTE: SPECIAL CASE OF
ONE-LAYERED FLOW
(δ=0, γ=1)
R/COT θ=5/6
γ=0.1
0.5
0.7
0.9
1.5
DEPTH RATIO, δ=d1/d2
R1/COT θ
10
1.0
0.1
.01
.1
1.0
10

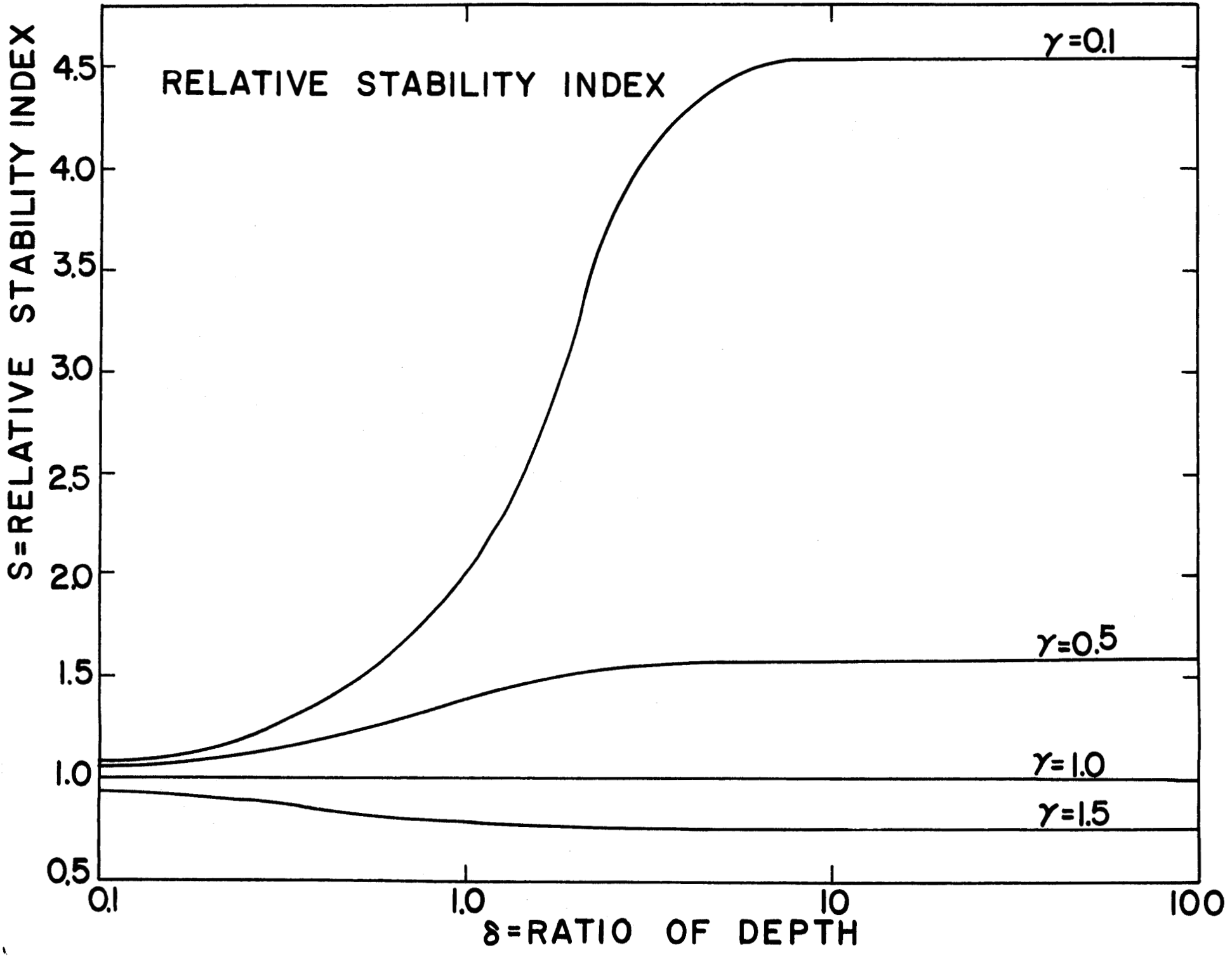
RELATIVE STABILITY INDEX
S=RELATIVE STABILITY INDEX
4.5
4.0
3.5
3.0
2.5
2.0
1.5
1.0
0.5
0.1
1.0
10
100
δ=RATIO OF DEPTH
γ=0.1
γ=0.5
γ=1.0
γ=1.5

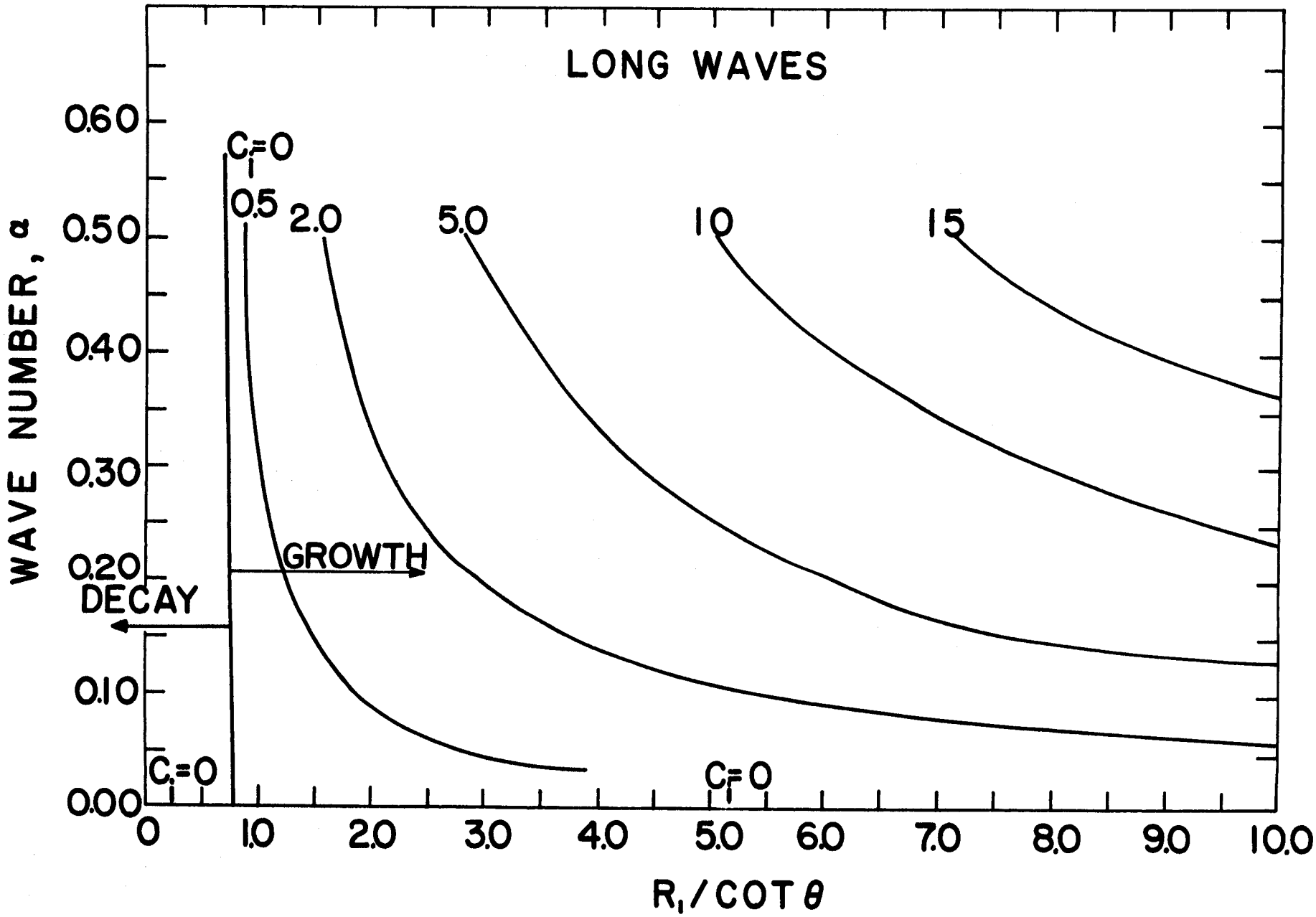
LONG WAVES
WAVE NUMBER, α
0.60
0.50
0.40
0.30
0.20
0.10
0.00
C_i=0
0.5
2.0
5.0
10
15
GROWTH
DECAY
C_i=0
C_i=0
0
1.0
2.0
3.0
4.0
5.0
6.0
7.0
8.0
9.0
10.0
R_1/COT θ