AY 13 1955

CONFIDENTIAL

Copy 1
RM E54L07

NACA RM E54L07

GROUP 4 DOWNGRADE TO:
SECRET ON:
CONFIDENTIAL ON:
DECLASSIFY ON:

NACA

RESEARCH MEMORANDUM

PRELIMINARY RESULTS FROM FREE-JET TESTS OF A 48-INCH-DIAMETER RAM-JET COMBUSTOR WITH AN ANNULAR CAN-TYPE FLAME HOLDER

By Carl B. Wentworth, Wilbur F. Dobson, and Warren D. Rayle

Lewis Flight Propulsion Laboratory
Cleveland, Ohio

CLASSIFICATION CHANGE

To Unclassified
By authority of NASA Memo dtd 5-2-23 /s/ by H. Maines
Changed by M. Ruda Date 6-5-23

CLASSIFIED DOCUMENT

This material contains information affecting the National Defense of the United States within the meaning of the espionage laws, Title 18, U.S.C., Secs. 793 and 794, the transmission or revelation of which in any manner to an unauthorized person is prohibited by law.

NATIONAL ADVISORY COMMITTEE FOR AERONAUTICS

WASHINGTON
May 11, 1955

FILE COPY
To be returned to the files of the National Advisory Committee for Aeronautics Washington, D. C.

CONFIDENTIAL

DE[redacted]IED

NATIONAL ADVISORY COMMITTEE FOR AERONAUTICS

RESEARCH MEMORANDUM

PRELIMINARY RESULTS FROM FREE-JET TESTS OF A 48-INCH-DIAMETER RAM-JET COMBUSTOR WITH AN ANNULAR CAN-TYPE FLAME HOLDER

By Carl B. Wentworth, Wilbur F. Dobson, and Warren D. Rayle

3577

CP-1

SUMMARY

28458

A ram-jet engine with an experimental 48-inch-diameter combustor was investigated in an NACA free-jet facility. The combustor was designed to reach an optimum combustion efficiency at a fuel-air ratio between 0.035 and 0.040. The flame-holder design comprised an annular can or basket with the inner surface terminating in an annular V-gutter flame holder. About 40 percent of the engine air was bypassed around the flame-holder region so that the combustion occurred in nearly stoichiometric mixtures. This stratification served not only to increase the combustion efficiency but also to reduce the sensitivity of the combustor to changes in fuel-air ratio. The bypass shroud terminated at the downstream edge of the outer surface of the flame holder.

Three combustor lengths and three fuel-distribution systems were investigated over a range of fuel-air ratios from 0.025 to 0.060 at air flows of 40 and 60 pounds per second (combustor-outlet total pressure from 550 to 1025 psfa). Peak combustion efficiencies occurred at actual fuel-air ratios from 0.035 to 0.040. Efficiency increased with combustor length; for example, with an air-flow rate of 40 pounds per second, combustor lengths of 60, 78, and 96 inches gave peak combustion efficiencies of approximately 0.79, 0.87, and 0.88, respectively. These peak efficiencies were obtained with a fuel-distribution system that provided higher fuel flows in the center of the duct. The total-pressure ratio across the combustor was about 0.85 at the design point. An electrical spark system proved capable of starting the combustor at the 60-pound-per-second air-flow condition, but not at lower flow rates.

Author

INTRODUCTION

The performance of an experimental 48-inch-diameter combustor in a ram-jet engine was investigated in a free-jet facility at the NACA Lewis laboratory. This investigation was a part of a continuing program to determine combustor configurations and engine geometries capable of delivering high performance at conditions simulating those experienced by

a long-range ram-jet powered vehicle. The performance of a combustor with an annular-piloted baffle-type flame holder was previously investigated as a part of this program (ref. 1). This report deals with the performance of a combustor using a different type flame holder, an annular can or basket.

The combustor was designed to operate at an over-all fuel-air ratio between 0.035 and 0.040. About 40 percent of the engine air was bypassed around the combustion region so that the combustion occurred in nearly stoichiometric mixtures. This stratification served to increase the combustion efficiency and to reduce the sensitivity of the combustor to variations in fuel-air ratio. It also provided a layer of low-temperature air along the combustor walls. The bypassed air was permitted to rejoin the main stream immediately downstream of the flame holder. 3577

Combustor performance was evaluated for three combustor lengths, 96, 78, and 60 inches, and three fuel-distribution systems. The air flow through the engine was set at either 40 or 60 pounds per second, giving combustor-outlet total pressures from 550 to 1025 pounds per square foot absolute. Fuel-air ratios between 0.025 and 0.060 were investigated. The upper limit was usually established by the critical pressure recovery of the supersonic diffuser.

The results of this investigation are presented both in tabular and in graphic form. Combustion efficiencies were calculated from the effective area of the exhaust nozzle, the mass flow of air through the engine, the total pressure of the gas entering the exhaust nozzle, and the fuel flow. The efficiencies represent the ratio of the fuel flow ideally required to give the observed heat rejection and exhaust total pressure to the fuel flow actually used.

APPARATUS

Facility

A 48-inch-diameter ram-jet engine was tested in a free-jet facility. The starting and performance characteristics of the free-jet facility have been previously reported (ref. 2). A sketch of the experimental configuration is shown in figure 1(a). An asymmetrical supersonic diffuser, which was connected to the combustor by a simple conical section of 15° half-angle, had an outlet velocity profile that was circumferentially nonuniform. To improve the profile and to avoid flow separation, a half-screen was installed in the high-velocity portion of the diffuser outlet. This screen comprised a square array of 1/4-inch rods and blocked 25 percent of the (half) area.

Combustor

The combustor shell was constructed of three cylindrical sections, 42, 36, and 18 inches in length to permit variation of combustor length. These sections, as well as the exhaust nozzle were water-cooled. The convergent-divergent exhaust nozzle had a 54.6-percent open area; the half-angle of the convergent section was 25°; the half-angle of the divergent section was 12°. A motor-operated clam-shell (not shown) was attached to the exhaust nozzle to facilitate the obtaining of cold-flow drag data. The cross section of the combustor is shown in figure 1(a); a cutaway view is given in figure 1(b).

The flame holder used in this investigation was an annular can or basket with about 130 percent open area. Its length was 37 inches and its leading edge, or dome, was located in the 30° cone section. The inner surface of the can terminated in an annular V-gutter, 13 inches in diameter. A flow-dividing shroud or liner extended from the downstream edge of the can through the 30° cone, bypassing about 40 percent of the engine air around the flame-holder region. Two annular turning vanes located near the shroud leading edge were employed to reduce the possibility of flow separation at this point. The main stream air was further subdivided by a wedge-shaped extension attached to the annular dome of the flame holder. The purpose of this flow division was to proportion the air properly between the two perforated surfaces of the flame holder.

Fuel was injected normal to the main air stream by means of simple orifices in sixteen 1/2-inch-diameter radial tubes equally spaced circumferentially, and supplied from a common external manifold. Three such systems, differing only in size and location of fuel orifices, were incorporated into a single installation to facilitate the study of fuel-profile effects. The corresponding tubes from each fuel system were combined into single fuel bars. Figure 1 shows a typical fuel bar installed in the combustor. The circumferential locations of fuel bars, as well as the three basic fuel distribution profiles investigated are shown in figure 2. In addition, four evenly spaced fuel bars permitted fuel to be injected directly into the pilot region (the dome of the can).

The fuel used throughout the investigation was MIL-F-5624 B, grade JP-5, with a heating value of 18,625 Btu per pound and a hydrogen-carbon ratio of 0.159.

Ignition was achieved through the use of two surface-discharge spark plugs located in the pilot region. A separate power supply of the condenser-discharge type was used for each plug.

3577

CP-1 back

Instrumentation

The air flow through the engine was determined from the effective capture area of the supersonic diffuser and the total pressure and temperature upstream of the free-jet nozzle. Cold-flow tests with a small exhaust nozzle were used to determine the effective capture area of the diffuser. Total pressures were measured in the engine at stations 3 and 6 (see fig. 1(a)). At station 3, the 48 total-pressure tubes were located on six radial bars. The eight total-pressure tubes on each bar were spaced radially on equal areas. At station 6, the combustor outlet, the 33 tubes were located on four radial bars and spaced radially on equal areas with the odd tube being located in the center of the total area. These tubes were all connected to mercury manometers, the wells of which were in turn connected to a manifold kept within 1/2 pound per square foot of absolute zero by a vacuum pump. 3577

The air temperature entering the engine was measured by an 18-point thermocouple array located upstream of the free-jet nozzle. Total temperature was assumed to be conserved through the diffuser. The temperature of the gas near the wall at the entrance to the exhaust nozzle was measured by four thermocouples located $1\frac{1}{2}$ inches from the wall and equally spaced about the circumference.

The quantity of bypass air was determined from measurements of total and static pressure in the bypass channel.

Fuel-flow measurements were obtained from the pressure drop across sharp-edged orifices. These orifices were calibrated by comparison with standard rotameters. Separate measurement of the fuel flowing to each of the main fuel manifolds was made by means of a positive-displacement electronic flowmeter.

The flow of cooling water to the engine was metered through a flat-plate orifice. The temperature rise of the coolant was determined from two thermocouples located upstream and downstream.

The mercury manometers measuring pressures at stations 3 and 6, as well as manometers connected to read static pressures at various points within the engine were recorded photographically. The various temperatures were recorded by self-balancing potentiometers.

In addition, the combustor was observed in operation by means of a periscope located downstream of the engine. The periscope afforded a view of the combustion region through the exhaust nozzle.

3577

PROCEDURE

Combustor performance was evaluated for three combustor lengths, 96, 78, and 60 inches, at air-flow rates of 40 and 60 pounds per second. At 40 pounds per second, the combustor-outlet total pressure ranged from 550 to 700 pounds per square foot absolute; at 60 pounds per second, the range was 850 to 1025 pounds per square foot absolute. An inlet-air temperature of 530° F was used throughout the investigation.

At each condition, data were taken over a range of fuel-air ratios from about 0.025 to 0.055, with the upper limit being dependent upon combustion efficiency. At 100 percent combustion efficiency, a fuel-air ratio of less than 0.050 would cause the diffuser to operate subcritically. Limits on the facility prevented any data being taken with subcritical diffuser operation.

Three fuel-distribution systems giving the profiles shown in figure 2 were used, either singly or in combination. Fuel system A gave a uniform distribution, while system C concentrated the fuel in the outer portion of the main air stream, and system D concentrated it in the center. These fuel profiles and letter designations are identical to those used in reference 1. Fuel system B of reference 1 was not used with the flame holder reported herein. Most of the data were taken with a combination profile, 70 percent of the fuel flowing through system A and 30 percent through system D.

The injection of additional fuel into the pilot region did not enhance the combustor performance, consequently no pilot fuel was used for the performance tests.

No effort was made to control the flow rate of the bypass air. The quantity varied throughout the tests, being a function both of the fuel-air ratio supplied to the combustor and of its combustion efficiency. In general, the bypass air flow was about 30 percent of the total air for cold flow; with burning the bypass air flow was from 36 to 41 percent.

Ignition tests were conducted in the following manner. First the supersonic flow through the free-jet nozzle was established. The air temperature was then raised to the operating temperature of 530° F, and the inlet pressure was adjusted to give the desired mass flow through the engine. The fuel and the spark were then turned on; the order was found to be unimportant. When pilot fuel was used, a quantity giving an over-all fuel-air ratio 2.5 percent of stoichiometric was injected. The main fuel was provided in amounts giving over-all fuel-air ratios from 0.025 to 0.050. Data for the preignition engine pressures were obtained from the cold-flow tests, wherein no fuel was injected.

RESULTS

The combustor performance and ignition data obtained are summarized in tables I and II. The performance data from table I are presented graphically in figures 3 and 4. Figure 3(a) shows the combustion efficiency, combustor-outlet total pressure, inlet Mach number, and combustor total-pressure ratio as functions of ideal fuel-air ratio (which is related to combustor temperature ratio; see appendix) for an air-flow rate of 40 pounds per second. The fuel-distribution system used was the combination of 0.7 profile A and 0.3 profile D which was determined to be optimum and is subsequently discussed herein. At an actual fuel-air ratio near 0.040, a peak efficiency of about 0.88 was obtained with the 96-inch combustor length. Decreasing the combustor length to 78 inches reduced the peak efficiency to about 0.87; decreasing the length further to 60 inches reduced the efficiency to about 0.79. The shape of the efficiency curve remained substantially the same for all three combustor lengths. The combustor total-pressure ratio was unaffected by combustor length and ranged from 0.80 to 0.88 with variation of fuel-air ratio; at the design ideal fuel-air ratio of 0.034 the pressure ratio was 0.85.

Similar results were obtained with an air flow of 60 pounds per second as shown by figure 3(b). Here the peak efficiency was about 0.90 for the 96-inch combustor length, 0.88 for the 78-inch length, and 0.83 for the 60-inch length. The increase in combustor pressure level did not greatly increase the combustion efficiency at and above the design fuel-air ratio. However, at low fuel-air ratios as much as 0.05 was gained in combustion efficiency. The combustor total-pressure ratio again ranged from 0.80 to 0.88 with the pressure ratio being about 0.85 at the design ideal fuel-air ratio of 0.034.

The nonuniform velocity profile at the diffuser outlet allowed the flame to pass upstream of the can in the low-velocity regions. Direct observation of the combustor through the periscope showed that some parts attained a bright red heat. Because the intensity of the flame holder heating seemed to increase with combustor pressure and air-flow rate, the investigation was limited to air flows of 60 pounds per second and less in order to prevent flame-holder burn-out. For operation with nonuniform velocity profiles, this flame holder must be considered less suitable than that of reference 1.

The effect of proportioning the fuel between the various systems is shown in figure 4 for an air-flow rate of 40 pounds per second. All fuel systems investigated gave fuel profiles that varied only radially. Inasmuch as the air profile varied both radially and circumferentially, the matching of fuel and air profiles was not necessarily optimum. Figure 4(a) shows the combustion efficiency with combinations of fuel profiles A and C at an actual fuel-air ratio of 0.035. A maximum efficiency occurred with all the fuel flowing through system A. Figure 4(b) shows

the results of similarly proportioning the fuel between systems A and D at an actual fuel-air ratio of 0.035. The maximum efficiency here occurred with 60 or 70 percent of the fuel flowing through system A. Throughout the range of proportioning, the efficiencies remained higher than those found with the combination of fuel systems A and C. Figure 4(c) repeats the effect of proportioning between fuel systems A and D for an actual fuel-air ratio of 0.040. The peak efficiency again occurs with about 70 percent of the fuel flowing through system A; the peak is not so marked as at the lower fuel-air ratio. Figure 4(d) shows the results of proportioning the fuel between systems C and D for an actual fuel-air ratio of 0.035. Highest efficiencies occurred when about 30 percent of the fuel flowed through system C. From these four curves, the combination of 70 percent fuel profile A and 30 percent fuel profile D was selected as the optimum and used in obtaining the data shown in figure 3. Some gain in combustion efficiency could possibly have been made by using a circumferentially nonuniform fuel profile to more nearly match the air profile.

3577

The starting characteristics of this configuration are indicated in table II. Successful starts were obtained only at the higher air-flow rate, 60 pounds per second with a static pressure in the ignition region of about 460 pounds per square foot absolute. The one exception, as indicated, occurred when the attempted start immediately followed an engine shutdown; the combustor parts may still have been hot. In some instances, at the air-flow rate of 40 pounds per second, ignition would occur. The resulting flame would be limited in extent to the dome of the combustor; it would not propagate into the main stream. Such results are listed in table II as 'pilot only' starts.

CONCLUDING REMARKS

The performance of the experimental can-type combustor in a 48-inch-diameter ram-jet engine, tested in a free-jet facility, was as follows:

The highest combustion efficiencies were obtained with a 96-inch-long combustor at actual fuel-air ratios from 0.035 to 0.040 using a radially nonuniform fuel profile which provided additional fuel in the center of the duct. At an air-flow rate of 40 pounds per second (combustor-outlet total pressure from 550 to 700 psfa) the peak efficiency was 0.88. At 60 pounds per second air flow (combustor-outlet total pressure from 850 to 1025 psfa) the efficiency approached 0.90. Reducing the combustor length to 78 inches decreased the peak efficiency by about 2 percent. Reducing the length to 60 inches caused a further decrease in peak efficiency of 5 percent at the higher air flow, and of 8 percent at the lower air flow.

At the design point the total-pressure ratio across the combustor was 0.85. With variation in fuel-air ratio, the value ranged from 0.80 to 0.88.

Ignition was obtained with an electric spark with static pressures in the ignition region as low as 460 pounds per square foot absolute immediately prior to ignition. At lower pressures ignition was obtained only once; this occurred immediately after the engine had been shut down.

Lewis Flight Propulsion Laboratory
National Advisory Committee for Aeronautics
Cleveland, Ohio, December 6, 1954

3577

DECLASSIFIED

3577

CP-2

APPENDIX - SYMBOLS AND CALCULATIONS

The following symbols are used in this report:

$(f/a)_{act}$ actual fuel-air ratio in engine, (lb fuel)(sec)/(lb air)(sec)

$(f/a)_{id}$ ideal fuel-air ratio (fuel-air ratio necessary to cause observed engine-outlet total pressure and observed heat loss)

M_{in} Mach number at engine inlet, based on inlet total pressure and temperature and maximum (48-in.) diameter

P_3 total pressure at engine station 3 (diffuser outlet), psfa

P_6 total pressure at engine station 6 (engine outlet), psfa

p_p static pressure in pilot annulus, psfa

T_{in} total temperature at engine inlet, assumed to be same as at inlet to free-jet nozzle, °F

T_x indicated temperature at exhaust-nozzle inlet, $1\frac{1}{2}$ in. from the wall of engine, °F

W_b ratio of air flow through bypass to total flow through engine

W_e air flow through engine, lb/sec

η_c combustion efficiency

Combustion efficiency as used herein is defined as ratio of fuel ideally required to give observed exhaust pressure and heat rejection to that actually supplied to engine, or $\eta_c = \frac{(f/a)_{id}}{(f/a)_{act}}$.

From tables of theoretical temperature rise for combustion as a function of fuel-air ratio and initial temperature, charts were prepared showing ideal fuel-air ratio as a function of engine-inlet temperature, air-flow rate, and engine-outlet total pressure. In preparing these charts, the exhaust-nozzle discharge coefficient was assumed to be 0.99 which resulted in an effective area of 54.1 percent. This value for the flow coefficient was obtained from reference 3 for a similar nozzle. To the ideal fuel-air ratio necessary to account for the engine-outlet total pressure, a small correction was added to compensate for the heat that was picked up by the cooling water. In making this correction, it was assumed that the heat picked up by the cooling water during cold-flow tests came in equal parts from the inside and from the outside of the engine. Thus the total amount of heat picked up by the coolant during burning tests was reduced by one-half the amount picked up in cold-flow tests before making the heat-loss correction.

REFERENCES

1. Rayle, Warren D., Smith, Ivan D., and Wentworth, Carl B.: Preliminary Results from Free-Jet Tests of a 48-Inch-Diameter Ram-Jet Combustor with an Annular-Piloted Baffle-Type Flameholder. NACA RM E54K15, 1954.

2. Seashore, Ferris L., and Hurrell, Herbert G.: Starting and Performance Characteristics of a Large Asymmetric Supersonic Free-Jet Facility. NACA RM E54A19, 1954.

3. Krull, H. George, and Steffen, Fred W.: Performance Characteristics of One Convergent and Three Convergent-Divergent Nozzles. NACA RM E52H12, 1952.

3577

TABLE I. - PERFORMANCE DATA FOR ANNULAR CAN-TYPE COMBUSTOR IN A 48-INCH-DIAMETER RAM-JET ENGINE

Engine air flow, W_e, lb/sec	Inlet temperature, T_{in}, °F	Bypass air, W_b, percent	Combustor-inlet Mach number, M_{in}	Main fuel distribution, percent, to profiles - A	C	D	Gas temperature, near wall of exhaust nozzle, T_x, °F	Engine outlet pressure, P_6, psfa	Pressure ratio across combustor, P_6/P_3	Actual fuel-air ratio, $(f/a)_{act}$	Ideal fuel-air ratio, $(f/a)_{id}$	Combustion efficiency, η_c
Combustor length, 96 inches.												
40.1	533	35	0.168	- -	- -	- -	380	572	0.831	- - -	- - -	- - -
39.8	543	33	.160	- -	- -	- -	390	614	.854	- - -	- - -	- - -
40.1	541	33	.152	- -	- -	- -	390	663	.869	- - -	- - -	- - -
40.2	540	30	.147	- -	- -	- -	390	708	.898	- - -	- - -	- - -
39.6	529	38	.161	70		30	640	574	.813	0.0298	0.0236	0.792
39.8	530	39	.153	70		30	740	627	.836	.0347	.0305	.879
39.7	526	38	.148	70		30	690	654	.848	.0400	.0348	.870
39.8	524	38	.147	70		30	760	674	.869	.0451	.0381	.845
39.8	526	39	.145	70		30	740	687	.872	.0510	.0405	.794
39.9	540	38	.158	81	19		660	607	.835	.0347	.0273	.787
40.0	534	37	.159	60	40		650	598	.828	.0349	.0260	.745
41.4	535	37	.161	40	60		660	610	.822	.0335	.0248	.740
40.1	523	38	.160	20	80		650	593	.826	.0344	.0255	.741
40.4	532	36	.158	100		0	660	609	.831	.0342	.0269	.787
40.3	533	38	.154	80		20	680	631	.837	.0344	.0299	.869
40.2	530	39	.154	60		40	660	631	.840	.0344	.0303	.881
40.5	523	38	.156	41		59	660	623	.838	.0344	.0287	.834
40.7	530	39	.158	21		79	660	620	.841	.0342	.0277	.810
40.5	524	38	.150	100		0	690	658	.848	.0392	.0340	.867
40.2	525	39	.149	80		20	700	659	.854	.0393	.0351	.893
39.9	526	39	.148	59		41	650	656	.852	.0399	.0353	.885
39.7	528	39	.149	40		60	660	647	.848	.0400	.0342	.855
39.7	528	39	.151	20		80	650	636	.845	.0400	.0326	.815
39.7	527	39	.152	0		100	610	633	.846	.0395	.0320	.810
40.1	538	36	.160		100	0	660	593	.818	.0347	.0252	.726
40.3	530	36	.159		80	20	660	599	.824	.0346	.0257	.743
40.5	526	39	.158		58	42	670	608	.828	.0342	.0267	.781
40.3	529	39	.156		50	50	630	616	.830	.0346	.0281	.812
40.5	524	38	.155		41	59	660	623	.835	.0341	.0288	.845
40.5	523	39	.156		19	81	660	625	.840	.0342	.0289	.845
40.6	522	39	.157		0	100	720	621	.839	.0341	.0283	.830
60.0	525	38	.158	71		29	730	896	.825	.0297	.0261	.879
59.9	535	39	.152	70		30	720	950	.839	.0351	.0314	.895
59.9	527	39	.149	70		30	740	974	.846	.0377	.0338	.897
59.8	529	39	.148	70		30	740	988	.853	.0401	.0354	.883
59.9	526	40	.147	70		30	790	1005	.860	.0424	.0372	.877

CONF[redacted]IAL

CO[redacted]IAL

CO[redacted]TIAL

TABLE I. - CONCLUDED. PERFORMANCE DATA FOR ANNULAR CAN-TYPE COMBUSTOR IN A 48-INCH-DIAMETER RAM-JET ENGINE

Engine air flow, W_a, lb/sec	Inlet temperature, T_{in}, °F	Bypass air, W_b, percent	Combustor-inlet Mach number, M_{in}	Main fuel distribution, percent, to profiles -			Gas temperature, near wall of exhaust nozzle, T_x, °F	Engine outlet pressure, P_6, psfa	Pressure ratio across combustor, P_6/P_3	Actual fuel-air ratio, $(f/a)_{act}$	Ideal fuel-air ratio, $(f/a)_{id}$	Combustion efficiency, η_c
				A	C	D						
Combustor length, 78 inches.												
39.7	529	38	0.150	100			550	649	0.855	0.0408	0.0343	0.841
39.7	530	39	.163	70		30	510	558	.799	.0298	.0216	.725
39.9	528	38	.158	69		31	550	593	.819	.0321	.0258	.804
39.8	528	38	.153	71		29	540	623	.836	.0348	.0302	.868
39.8	528	36	.148	70		30	555	648	.842	.0399	.0342	.857
39.7	530	39	.147	70		30	580	669	.860	.0453	.0376	.831
40.0	528	39	.145	70		30	583	689	.867	.0503	.0401	.797
59.7	533	39	.159	71		29	605	882	.815	.0299	.0252	.843
59.5	533	40	.152	70		30	645	942	.837	.0355	.0312	.879
59.3	532	40	.149	70		30	685	978	.852	.0407	.0351	.862
59.9	527	39	.147	69		31	768	1012	.864	.0456	.0379	.831
59.5	531	40	.145	69		31	793	1026	.870	.0509	.0402	.789
Combustor length, 60 inches.												
60.1	529	32	.166	- -	- -	- -	405	866	.834	- - -	- - -	- - -
61.7	533	32	.160	- -	- -	- -	405	949	.857	- - -	- - -	- - -
61.0	533	28	.146	- -	- -	- -	410	1072	.893	- - -	- - -	- - -
79.6	514	29	.161	- -	- -	- -	401	1205	.854	- - -	- - -	- - -
39.9	533	39	.162	69		31	481	577	.813	.0323	.0234	.724
40.0	528	39	.157	69		31	489	601	.826	.0347	.0266	.767
39.8	537	40	.157	69		31	495	602	.826	.0350	.0272	.776
40.0	536	39	.153	69		31	503	637	.847	.0400	.0315	.788
39.7	532	40	.152	69		31	501	635	.844	.0402	.0320	.796
40.1	525	39	.149	71		29	513	656	.851	.0444	.0343	.773
39.9	536	40	.150	70		30	514	657	.857	.0452	.0349	.772
40.0	534	39	.148	69		31	521	672	.866	.0505	.0370	.733
39.5	539	39	.148	71		29	529	667	.864	.0503	.0375	.746
39.9	534	41	.147	69		31	526	680	.870	.0555	.0387	.697
40.0	531	39	.146	70		30	540	685	.872	.0599	.0393	.655
59.7	534	39	.162	70		30	543	859	.808	.0300	.0229	.762
59.8	533	40	.157	71		29	551	898	.822	.0324	.0264	.815
59.8	534	41	.154	70		30	564	928	.831	.0354	.0293	.828
59.6	535	41	.152	70		30	575	941	.835	.0378	.0308	.815
60.5	538	40	.151	70		30	576	972	.842	.0397	.0324	.816
60.0	529	39	.148	68		32	608	994	.855	.0452	.0356	.787
60.2	531	39	.147	70		30	628	1014	.862	.0502	.0373	.743
60.2	536	41	.146	70		30	634	1025	.863	.0551	.0382	.693

CO[redacted]TIAL

TABLE II. - RESULTS OF IGNITION TESTS WITH ANNULAR CAN-TYPE COMBUSTOR

IN 48-INCH-DIAMETER RAM-JET ENGINE

[Nominal values of parameters immediately before tests.]

Engine air flow, W_e, lb/sec	Inlet temperature, T_{in}, °F	Pilot fuel, percent stoichiometric	Main fuel distribution profile	Engine outlet pressure, P_6, psfa	Pilot pressure, p_p, psfa	Fuel-air ratio, $(f/a)_{act}$	Result		
							Engine start	Pilot only	No start
40	530	0	A	340	310	0.035			x
40	530	0	A	340	310	0.041		x	
40	530	0	D	340	310	0.035	(x)		
40	530	0	D	340	310	0.035			x
40	530	0	0.7 A, 0.3 D	340	310	0.040		x	
40	530	0	0.7 A, 0.3 D	340	310	0.050			x
40	530	0	0.5 C, 0.5 D	340	310	0.033		x	
40	530	0	0.5 C, 0.5 D	340	310	0.035			x
40	530	2.5	0.5 C, 0.5 D	340	310	0.035			x
50	530	0	0.7 A, 0.3 D	430	385	0.040			x
60	530	0	A	520	460	0.041	x		
60	530	0	A	520	460	0.041	x		
60	530	0	D	520	460	0.025	x		
60	530	0	0.7 A, 0.3 D	520	460	0.030			x
60	530	0	0.7 A, 0.3 D	520	460	0.035	x		
60	530	0	0.7 A, 0.3 D	520	460	0.035			x
60	530	0	0.7 A, 0.3 D	520	460	0.040	x		

(x) This start immediately followed engine stop; engine parts may still have been hot.

CONFIDENTIAL

CONFIDENTIAL

CONFIDENTIAL

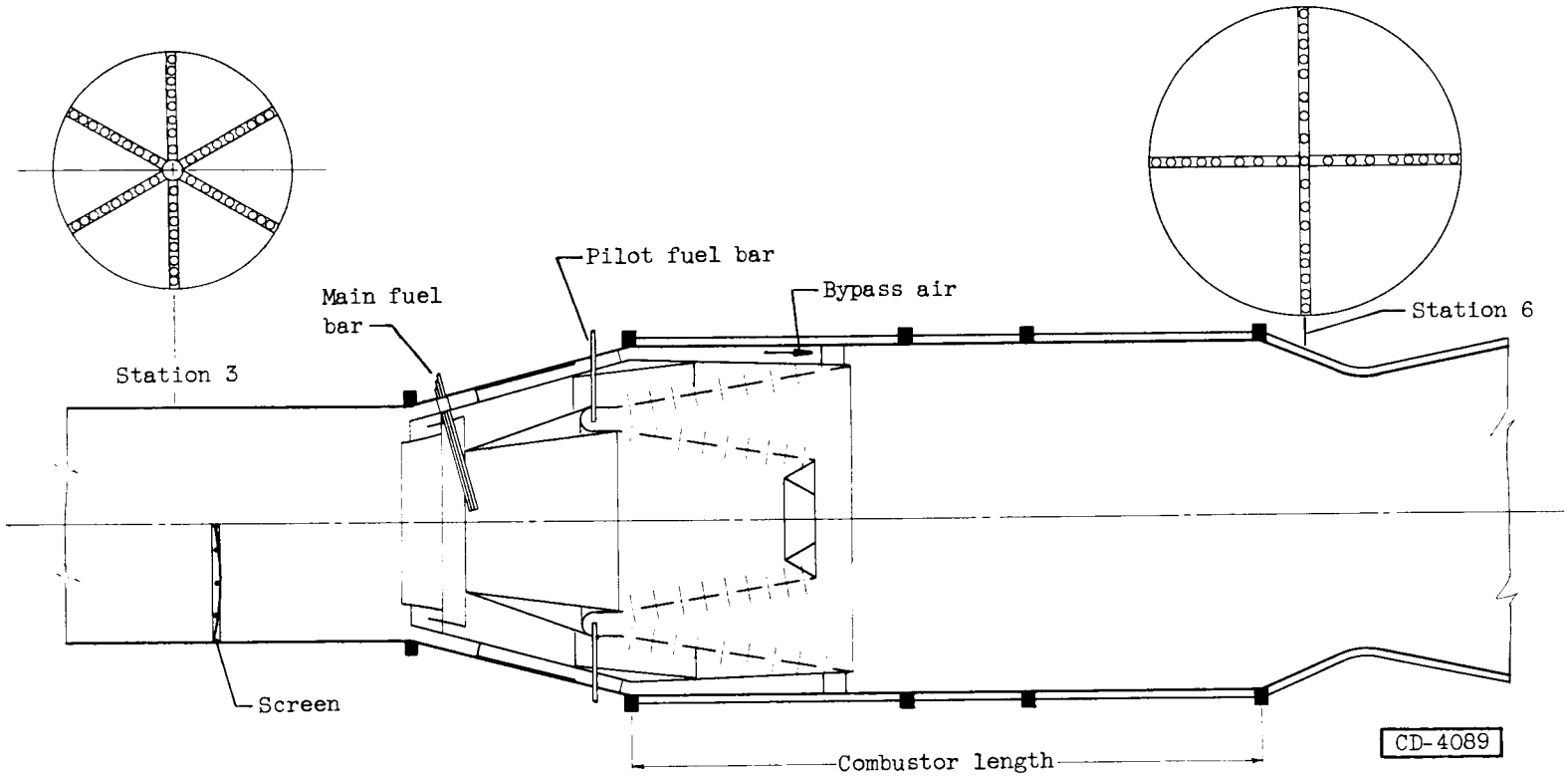

(a) Cross section.

Figure 1. Experimental ram-jet combustor.

CONFIDENTIAL

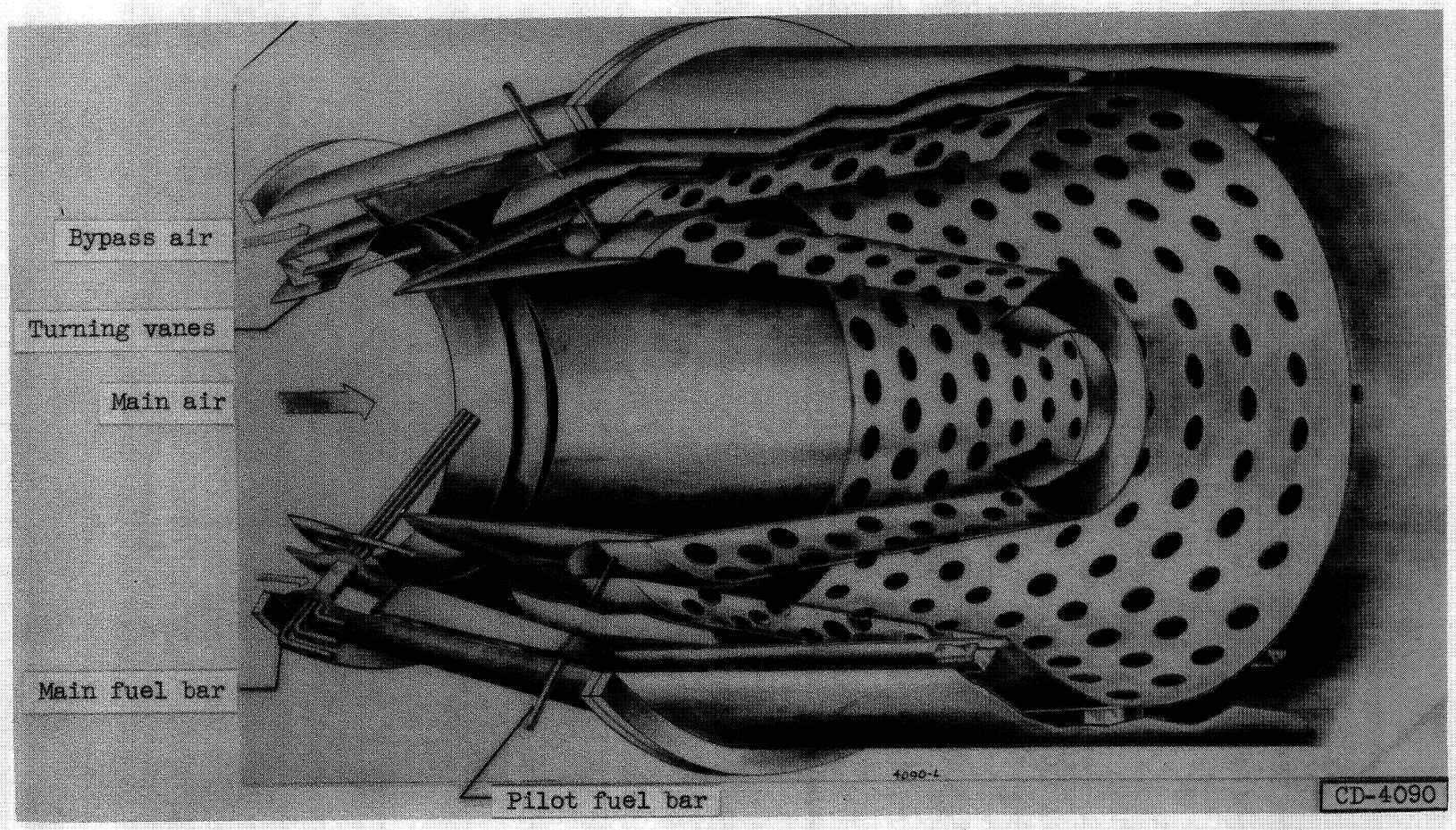

(b) Cutaway view.

Figure 1. - Concluded. Experimental ram-jet combustor.

CONFIDENTIAL

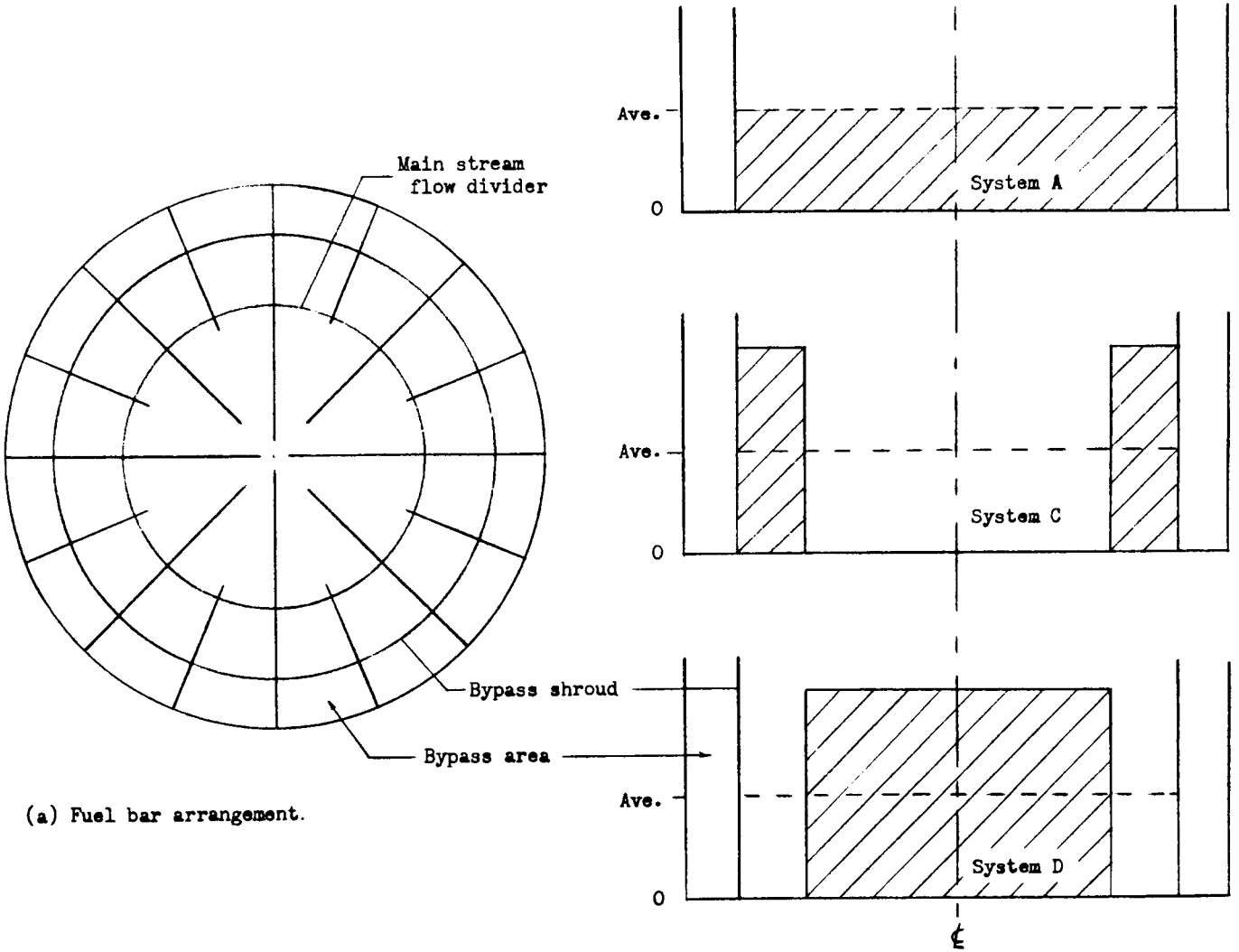

(a) Fuel bar arrangement.

(b) Fuel profiles used.

Figure 2. Fuel injection systems.

CONFIDENTIAL

DECLASSIFIED

3577

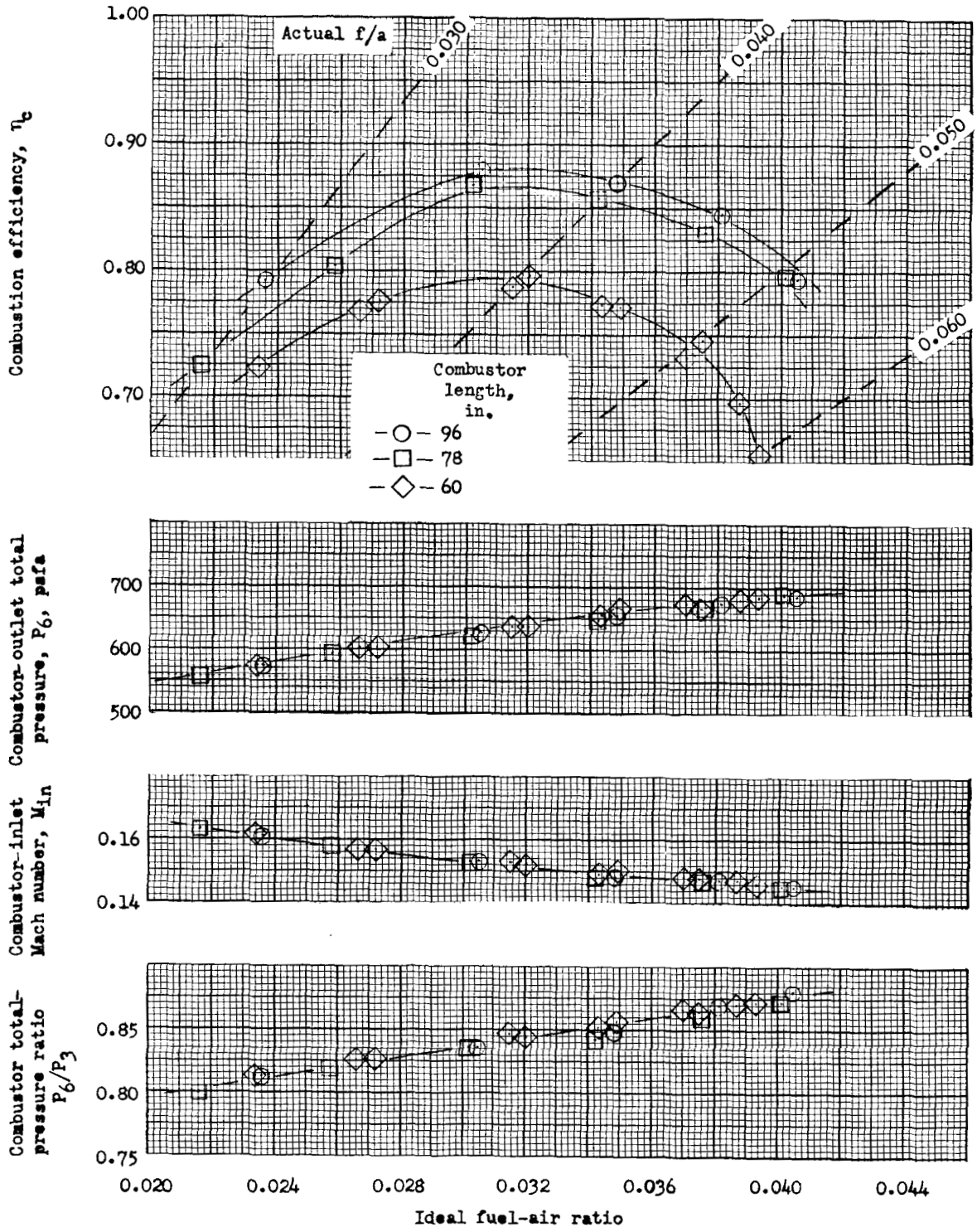

(a) Air flow, 40 pounds per second.

Figure 3. Combustor performance: air temperature, 530° F; fuel distribution, 0.7 profile A and 0.3 profile D.

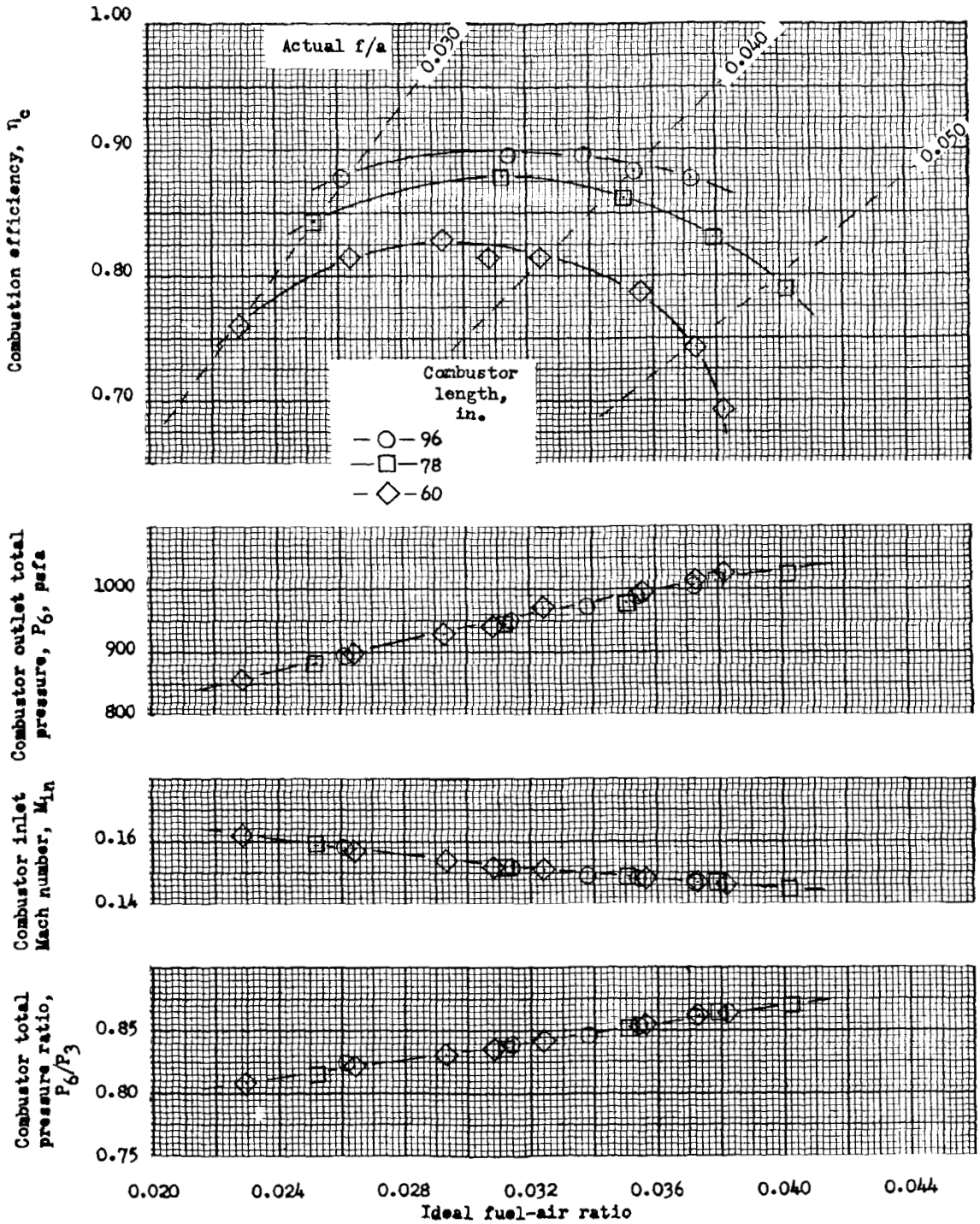

(b) Air flow, 60 pounds per second.

Figure 3. - Concluded. Combustor performance: air temperature, 530° F; fuel distribution, 0.7 profile A and 0.3 profile D.

DECLASSIFIED

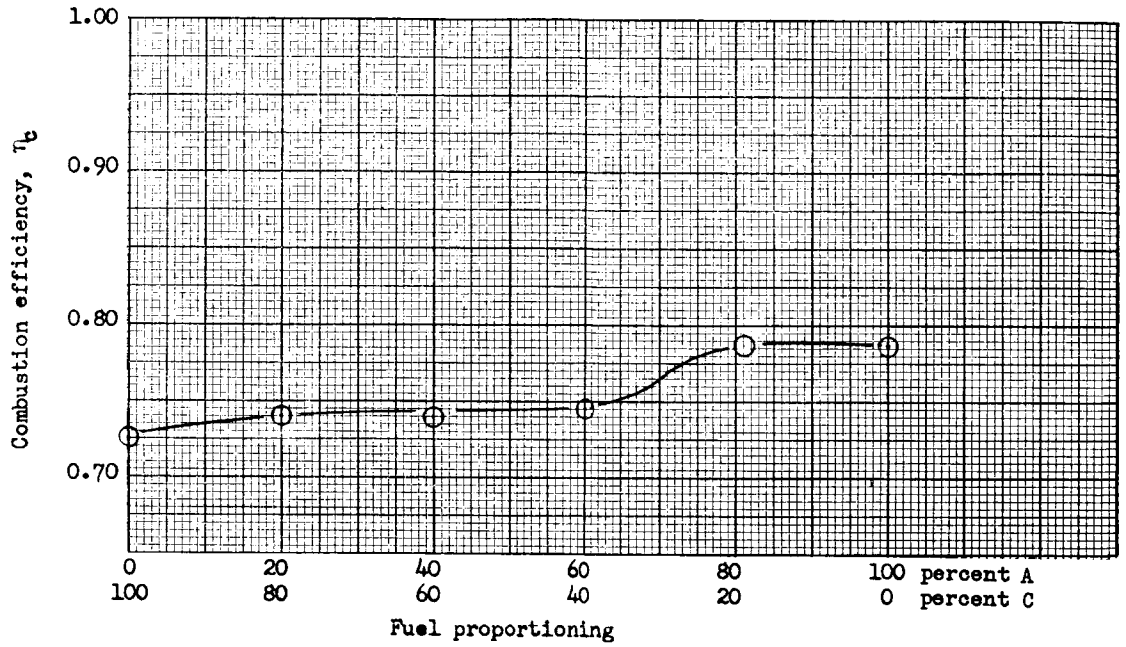

(a) Effect of proportioning fuel between profiles A and C ; actual fuel-air ratio, 0.035.

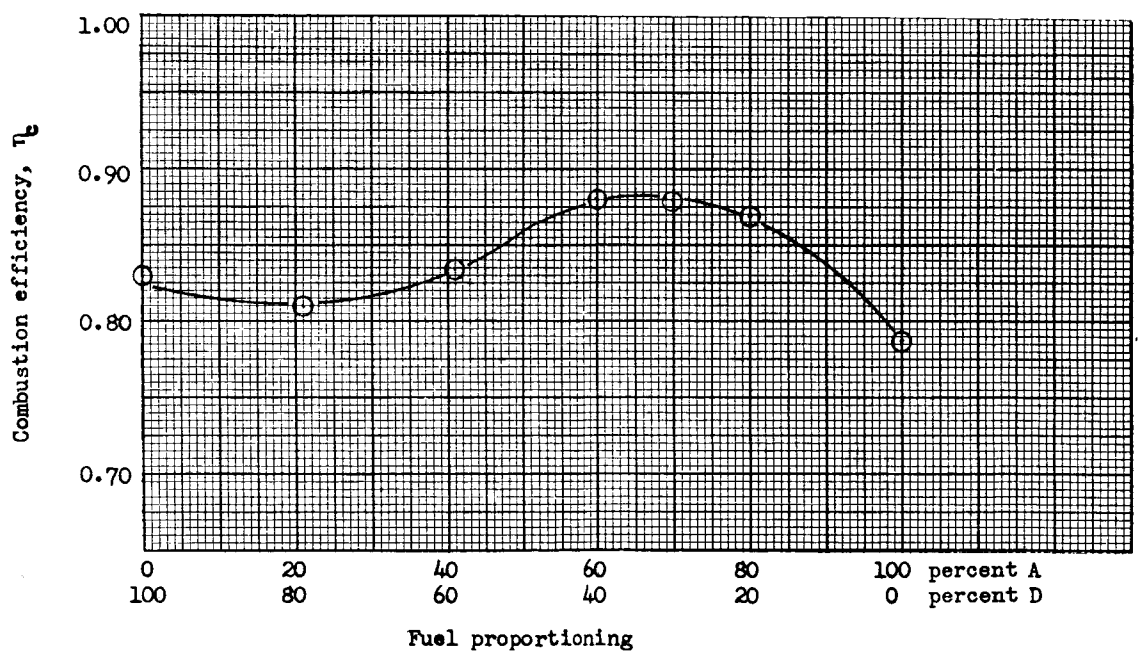

(b) Effect of proportioning fuel between profiles A and D ; actual fuel-air ratio, 0.035.

Figure 4. Performance of experimental combustor with varying fuel profiles. Air flow, 40 lb/sec; air temperature, 530°F; combustor length, 96 inches.

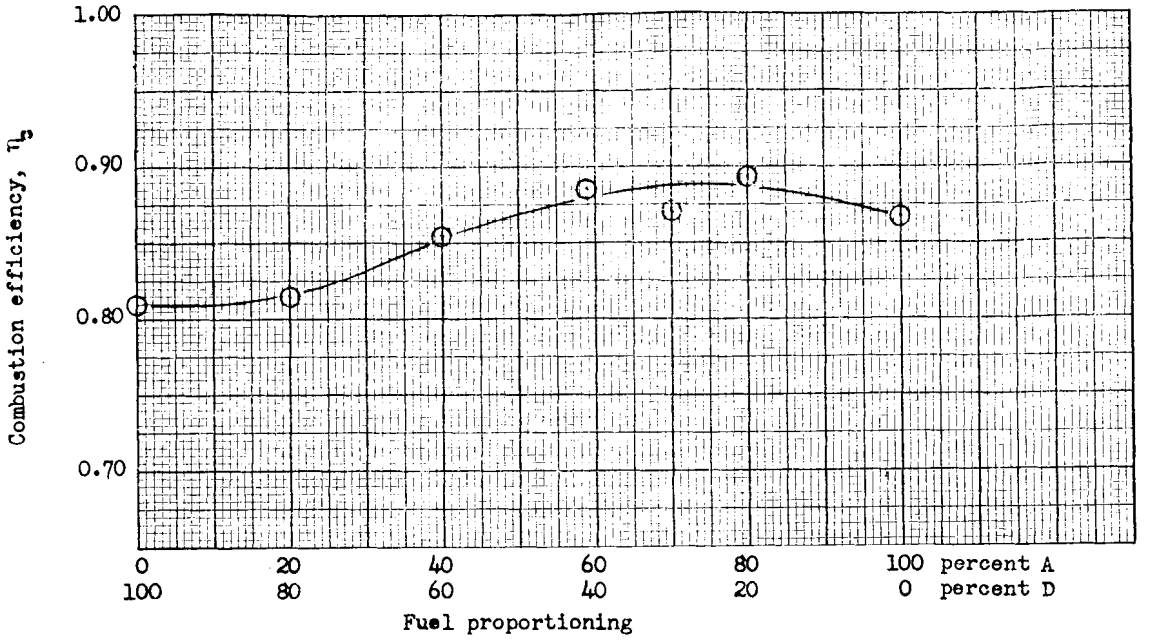

(c) Effect of proportioning fuel between profiles A and D ; actual fuel-air ratio, 0.040.

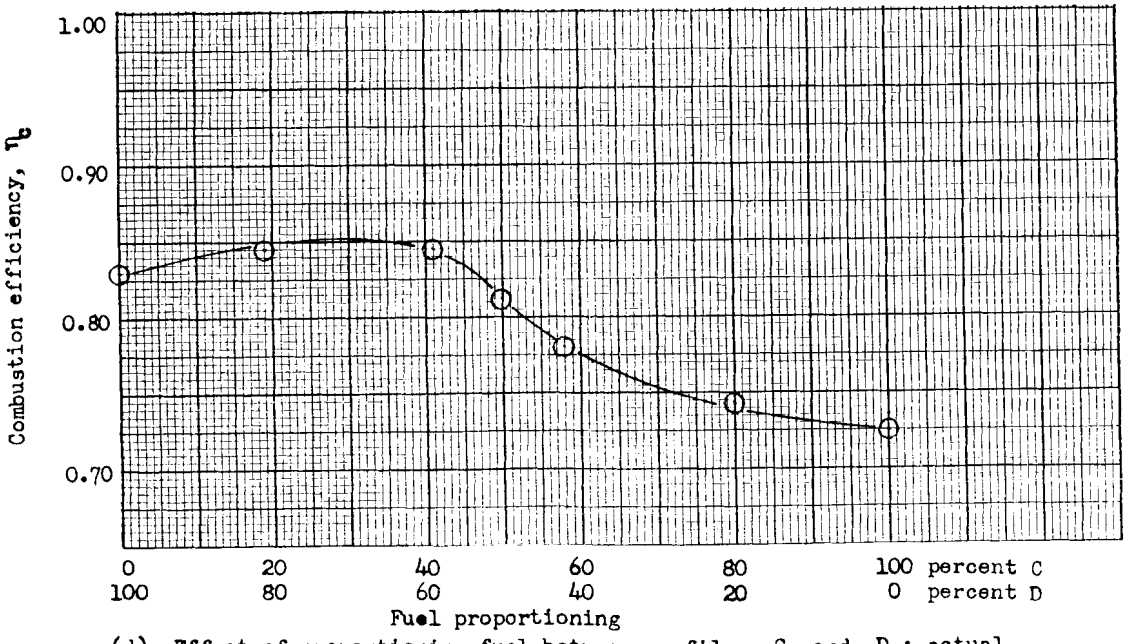

(d) Effect of proportioning fuel between profiles C and D ; actual fuel-air ratio, 0.035.

Figure 4. - Concluded. Performance of experimental combustor with varying fuel profiles. Air flow, 40 lb/sec; air temperature, 530°F; combustor length, 96 inches.