https://ntrs.nasa.gov/search.jsp?R=19650018936 2018-07-24T23:51:49+00:00Z

SMITHSONIAN INSTITUTION
ASTROPHYSICAL OBSERVATORY

Research in Space Science

SPECIAL REPORT

Number 173

THE PRAIRIE METEORITE NETWORK

by

Richard E. McCrosky and Harold Boeschenstein, Jr.

FACILITY FORM 602

N65 28537
(ACCESSION NUMBER)
(THRU)
76
(PAGES)
1
(CODE)
CR 63824
(NASA CR OR TMX OR AD NUMBER)
30
(CATEGORY)

GPO PRICE $ _____

OTS PRICE(S) $ _____

Hard copy (HC) 2.00

Microfiche (MF) .50

May 24, 1965

MBRIDGE, MASSACHUSETTS 02138

SAO Special Report No. 173

THE PRAIRIE METEORITE NETWORK

by

Richard E. McCrosky and Harold Boeschenstein, Jr.

May 24, 1965

Smithsonian Institution
Astrophysical Observatory

Cambridge, Massachusetts 02138

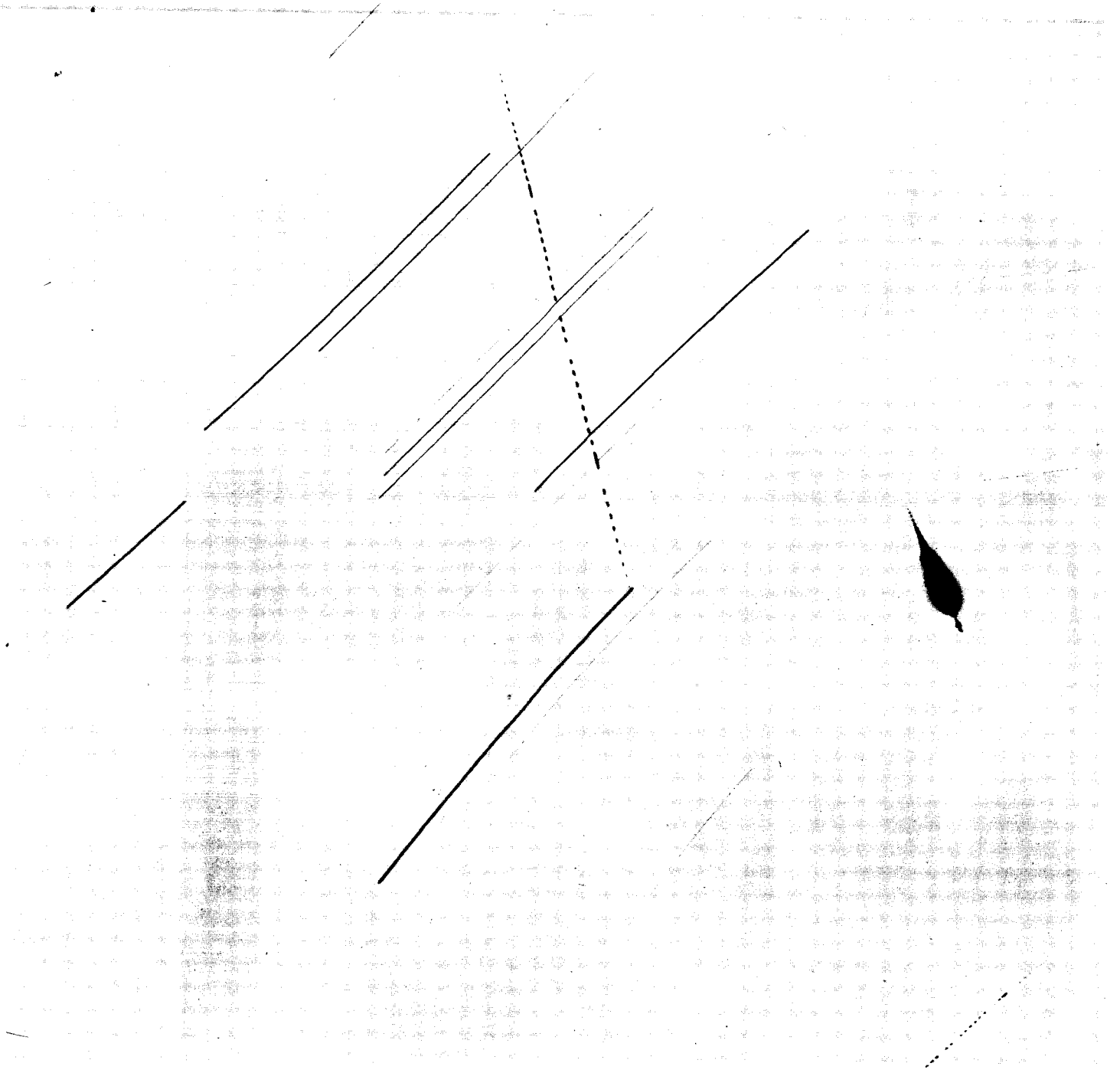

Frontispiece

Composite Photograph taken with Prairie Network Meteor Cameras.

The very bright object at right center is a short, bright meteor photographed at the Carroll, Iowa station. Star trails display points of increased brightness each 10 minutes. These fiducial points are used in the data reduction procedure.

The long meteor, centered on the film, was photographed through an overcast sky at the Reliance, South Dakota station and has been superimposed on this picture to illustrate the effects produced by the coding shutter.

The dashed line at the lower right is a passing car on the horizon.

THE PRAIRIE METEORITE NETWORK[1]

by

Richard E. McCrosky[2] and Harold Boeschenstein, Jr.[3]

Observations of the meteor phenomena in recent years by photographic and radar techniques have yielded an abundance of data relevant to a number of astronomical, geophysical, and technological problems. More important aspects of these include such diverse topics as the earliest measures of upper atmospheric densities and winds; development of forward scatter communication techniques; a description of the meteoric hazard for spacecraft; beginnings of an understanding of ablation and light-production phenomena of bodies entering the atmosphere at extreme velocities; some measure of the structure of cometary meteoroids and thus of the comets from which they were derived; and--most important from the astronomer's viewpoint--a large volume of data on meteor orbits that contains, intrinsically at least, information relating to the origin and history of the small bodies of the solar system--comets, asteroids, and meteors.

A successful optical observation of a meteor consists of two photographs of the same meteor taken by cameras separated by 20 km or more. Also, the meteor trail must be interrupted periodically to introduce a time scale in the measures. In the early years (the Harvard Meteor Project began two-station photography in 1936), successful observations were made only a few times a year. Since the number of meteors increases very rapidly with decreasing intensity, the bulimic meteor astronomer sought every possible increase in sensitivity of the optical system or film. By 1958, when the Harvard group stopped routine patrol work, meteor photographs were being obtained with the Baker Super-Schmidt meteor cameras and the fastest emulsions at a rate of one pair of photographs every 16 minutes.

---

[1]The network was established under National Aeronautics and Space Administration grant number NsG 291-62.

[2]Astronomer, Smithsonian Astrophysical Observatory.

[3]Senior Research Assistant, Harvard College Observatory.

Meteors have their origin in two different sources--comets and asteroids. These two parent groups have no known generic relationship but when either a fragment of a comet or a tiny asteroidal particle happens to collide with the earth, a meteor is produced. It takes far more than a casual inspection of the photographic data to determine whether or not a given meteor was produced by a cometary or an asteroidal particle (see, e.g., Cook, Jacchia, and McCrosky). Yet we know now that the physical characteristics of these bodies are distinctly different. The asteroidal material is solid and frequently of relatively high tensile strength. Cometary material is extremely fragile, of low density, presumably porous, and generally incapable of surviving intact even a small part of the way through the atmosphere. Meteorites, the remains of a larger body that penetrated the earth's atmosphere, are never of cometary origin. Furthermore, we know qualitatively that the fraction of meteors of asteroidal origin is smaller for faint meteors than for bright ones. Thus, in our pursuit for more data in recent decades we have heavily biased our sample against asteroidal particles. Fewer than one percent of the 6000 meteors in our collection are demonstrably asteroidal in origin. Since the intrinsically bright objects that may be asteroidal are rare phenomena, one can hope to get appreciable data only by waiting a long time or by observing a very large area of the earth's atmosphere where the meteor phenomena occur. With the usual meteor-observing system--two stations with a few moderately wide-field instruments--a "long time" turns out to be a lifetime. Before continuing with a discussion of our program to observe over a very large area, we will digress briefly to describe the aim of the program on which, of course, instrumentation must be based.

The observations define the (nearly) straight-line trajectory of the meteor as the intersection of two planes, each plane being established by one station and the projected view of the trajectory as seen against the star background from that station. Time intervals along the trajectory are

marked by the shutter interruptions in the meteor trail. Velocities along the trajectory are measured to an accuracy of better than one percent. If the direction of approach of the meteor with respect to the fixed stars (and thus with the sun) is known, the observed velocity of the meteor and the position of the earth are sufficient to derive a heliocentric orbit of considerable precision.

For long-enduring objects (times greater than one sec) decelerations are generally accurate enough to determine a mass/area ratio by the drag equation. It is then possible to extrapolate the trajectory to impact for those bodies of sufficient size to yield meteorites.

The trajectory itself, its extrapolation backward to an orbit, and its extrapolation forward to an impact point serve well to isolate the three kinds of problems we deal with.

Impact Point and Fresh Meteorites

Two groups of investigators have specific requirements for newly fallen meteorites. First, physicists have made intensive studies of the cosmic-ray induced radioactivity in meteorites both as a means for investigating the short- and intermittent-term cosmic-ray history in the near-solar neighborhood and as a means of studying the meteorites themselves. As an example of this, the quantity of A^{37}--a spallation product of iron--is a measure of recent cosmic-ray activity. Since the A^{37} is produced in miniscule amounts and has a half-life of only 34 days, sensible measurements can be made only if the object is in hand a month or two after the fall.

The second group, the biochemists, now have the problem of determining the origin of complex organic molecules found in some types of meteorites. If these compounds are not earthly contaminants, an exciting new field of investigation is at hand. Although it is difficult to eliminate entirely the possibility of contamination, one can at least hope to minimize it by collecting the meteorite as soon after fall as possible.

As yet we have no firm data on how often impact will occur, how well we can predict the point of impact, or how long it will be before recovery. We do know that our system will be several orders of magnitude better than the best visual observations that are sometimes used and will be a far more systematic approach than has been possible before. We estimate one or two impacts a year of bodies larger than one kg; we believe that impacts can be predicted to about 100-meter accuracy in the very best cases; and we will attempt to recover these within two to six weeks of fall. And, as a very important bonus, we will know a great deal about the history of any recovered object, relative both to its orbit in the solar system and to the changes suffered in passing through the atmosphere.

Trajectory Data

Until fairly recently the aerodynamicist and the meteor physicist had little in common apart from the complaint from each that the other was using erroneous theories in dealing with the meteor problem. (They were both right.) The aerodynamicist--accustomed to dealing with bodies of known mass, shape, density, and composition at relatively low velocities--was not, we felt, realistic in applying his results to small, irregular, crumbling bodies of unknown mass, density, and composition moving at extreme velocities. But now the aerodynamicist has pushed his area of interest well into the meteor region. If we can eliminate at least one of the variables in our meteor observations, we will benefit immensely from his results. Hopefully, too, we can assist the aerodynamicist by supplying observations of sizable bodies entering the atmosphere at velocities attainable now only by nature.

The unknown we hope to eliminate is the bulk density of the body. In the rare case of a recovered meteorite, it will be known with accuracy. In the other hundred cases of large bodies that are observed but not recovered because of the small terminal mass, we will be able to make a reasonable guess of the density if we can prove they are asteroidal and not cometary. We believe that this will be possible in many cases.

Orbital Data

In relegating all meteors to the two classes "asteroidal" and "cometary," we have ignored an important question. Is it possible that some meteorites are derived not from the asteroidal belt directly but rather as secondary ejecta resulting from a collision of an asteroidal particle and the moon? Lunar fragments may fall directly on the earth or may escape the earth-moon system entirely for a time and later collide with the earth. The orbits of these latter bodies may not be easily distinguished from asteroids that cross the earth's orbit, but one hopes that a greater abundance of data than is presently available will be helpful in assessing both the quantity of material of lunar origin and the history of both these bodies and the primary asteroidal fragments. It will be more data to add to the present astronomical and meteoritical information on the formation and dispersal of the asteroids, which is itself another step toward an understanding of the formation of the solar system.

Prairie Meteorite Network

To acquire the data needed for the solution of these problems, we have established a network of camera stations large enough to observe bright meteors in abundance, thus implementing for the first time a program that Dr. Fred L. Whipple suggested more than 20 years ago. The Midwest was chosen for the network because of its flat, accessible, and relatively rock-free terrain--an immense aid in any recovery effort that overcomes the disadvantages of the relatively poor observing conditions in that part of the country.

Taking as a goal "the most data on the most bright meteors" and some financial limit as the sole boundary conditions, one would be hard pressed to optimize the network. The only parameter that could be fixed with certainty was the focal length of the instrument to be used. If $F \lesssim 100$ mm, the instrumental limitations on the impact point predictions exceed the errors expected because of unknown stratospheric winds. Short focal length cameras are not adequate. Fortunately, a whole new series of attractive boundary conditions was imposed when the Air Force made available to us a number of

wide-field T-11 aerial mapping cameras with an f/6.3, F = 150 mm, Metrogon lens. Determining the optimum dispersal of a given number of specific cameras is a finite problem. We put our project goal in the following semiquantitative terms which, although subject to controversy, did permit an objective description of a particular station array.

1) An accurate determination of trajectory from two stations and an initial velocity for the determination of the orbit are required. These photographs are most easily obtained at high altitudes before the meteor has become disastrously bright and when it can be viewed at reasonable zenith angles from stations separated by large distances. The degree with which this condition was satisfied was defined as the sum of the areas, covered by at least two cameras, at altitudes of 40, 50, 60, 70, and 80 km.

2) Decelerations are required in order to make estimates of body size. For large meteorites, decelerations will be determined most accurately at low altitudes. Given the above double-station observations, single-station observations are sufficient for this purpose. The total area observed by at least one camera at altitudes of 10, 20, 30, and 40 km was therefore considered in the optimization.

3) A large number of meteorites explode in mid-atmosphere, follow quite separate trajectories to the ground, and are sometimes dispersed over several miles. To determine the differential trajectories of the fragments we would require double-station photographs at relatively low altitudes, but this is possible only with closely spaced stations. Emphasis on this condition would seriously affect the other requirements for widely spaced stations. Therefore this condition was discarded in the formal optimization, although in several instances parameters were adjusted arbitrarily to increase the coverage of low-altitude events.

Computations were first made for a 13-station network of three nesting hexagons, assuming that the sky was covered at each station from the zenith down to some limiting elevation angle, h_{lim}. The sum of the double-station areas at altitudes from 40 to 80 km plus the sum of the single-station areas at altitudes from 10 to 40 km was taken as a figure of merit for these nets. The figure of merit is a maximum for station separations of 325 km, if photography can be carried out to $h_{lim} = 10^{\circ}$, but only 225 km for $h_{lim} = 15^{\circ}$.

Initially, a station separation of 225 km was proposed, i.e., effective photography to elevation angles of 15°. Later, however, it was decided to place stations in the center of the three hexagons, thus converting the network to a system of adjacent equilateral triangles, in order to provide better double-station coverage at low elevations. At the same time, this advantage was partially nullified by increasing the station separation to 250 km because the shorter average baseline in the equilateral triangle array resulted in too much redundant three-station coverage at high elevations.

These first gross geometrical considerations had been carried out on the assumption that the entire sky to some elevation would be covered by at least one camera. In fact, complete coverage of the sky with a number of cameras of usual (i.e., square) format results in a very large amount of double coverage from each station and is highly uneconomical in terms of instrument utilization. Thus the next problem of concern was the optimal arrangement of the limited number of cameras at the particular stations. The optimum arrangement here involves four parameters: (1) the number of cameras per station; (2) the zenith distance of the camera center; (3) the orientation of the azimuth of the camera centers at one station with respect to those at adjoining stations; and (4) the orientation of the format with respect to the horizon. A detailed study of the coverage actually obtained showed that it would be most economical to use four cameras at each station with the camera centers at an elevation of 35° and with the diagonal of the format perpendicular to the horizon. Also, there is no advantage in having a different azimuthal orientation for neighboring stations. With this array of cameras, a region about 20° in diameter around the zenith is not photographed, but since the volume of the meteor region overhead is small, the loss is more apparent than real. There are also blind spots in each station at the 45° points at elevations below 30°, and about 10 percent of the format is wasted on each camera because it is photographing below the horizon.

One can easily define some figures of merit for efficiencies for this network, but then one looks in vain for something to compare them with. In spite of the obvious dissimilarities, our previous experience with a two-station "network" and Super-Schmidt cameras is perhaps the best comparison available.

Sensitivity

The efficiency of an optical system for photography of moving-point sources is given by A^2/F, where A is the aperture of the system of F its focal length. For the f/0.8, F = 200 mm Super-Schmidt, the figure of merit is about 320 mm, or 75 times greater than that of the Metrogon. In the network operation the meteors will be on the average almost twice as far from the camera; thus we lose an additional factor of four in sensitivity from the inverse-square law, but half of this loss is regained because the angular velocity of the meteor is decreased by two. Another factor of two loss can be attributed to the atmospheric absorption resulting from the increased path length at our low elevations and the generally inferior sky. The total difference between the two systems is then a factor of 300, or about six magnitudes. For the Super-Schmidt, the limiting photographic magnitude for meteors is about $M_{pg} = 3$; it will be $M_{pg} = -3$ at the field center for the T-11 cameras. Because of severe vignetting in the T-11, magnitude -5 is a reasonable estimate for the effective sensitivity near the edge of the field.

Sky Coverage

The Super-Schmidts used near the zenith patrolled an area in the meteor region of 6×10^3 km^2 at 80 km. The double-station coverage provided by the Prairie Network is very close to 100 times this figure if the network area is decreased by 20 percent to account for the blind spots at the stations.

If we use the best available data on the rate of occurrence of bright meteors, the sensitivity and coverage figures lead to a data acquisition rate of one meteor pair per 12.5 hours of exposure by the entire network or, in terms of a single camera, one meteor photograph for each 800 hours of exposure. These numbers are subject to revision when more data are available.

Meteorite Recovery Efficiency

One can define a "gain" of the recovery system as the ratio of the area of the earth covered by the network divided by the area that must be searched to find the meteorite, i.e., the error imposed by our impact predictions. Neither quantity is particularly well defined, but some limits are possible. The area of the network is of the order of 7.5×10^5 km^2. The chance of

recovery outside this area--up to a total area of 2×10^6 km^2--is not negligible, but the impact errors will certainly increase rapidly in these outer fringes. If we take as our impact error 100 meters for the best-determined objects (steep entry angle and moderately large size), the gain is of the order of 10^7. It is difficult to imagine any acceptable observations giving a gain of less than 10^5.

Instrumentation

The 16 stations of the Prairie Meteorite Network extend from South Dakota to Oklahoma and from Illinois to Nebraska. The station sites were chosen for reasonable accessibility and isolation from excessively bright lights. The sites are generally within a mile of a measured geodetic point. The stations have been surveyed by the USGS. Their coordinates are given in Table 1, and their positions on an area map are shown in Figure 1.

The stations, which are designed for automatic operation, in principle require attention only every three to six weeks when the film supply is exhausted. In practice, we have assigned a local station attendant at each site to make routine inspection every few days. The attendants are also responsible for changing film, which is then sent to our field headquarters in Lincoln, Nebraska, for processing and inspection.

The station building is a 6' x 6' concrete block structure with an insulated galvanized roof in the form of a truncated pyramid (Figure 2). The four T-11 cameras face the cardinal points, looking out to the sky through 18" x 18" plate-glass windows (Figure 3). The stations also contain various photometers, a programmer to control the operation of the station, a battery bank, a vacuum system, and heaters and circulating fans.

The T-11 camera utilizes a 9" x 9" format. The maximum film supply is a 390-ft. roll. The film is held to the film back by vacuum.

Instruments in a data chamber are photographed on each exposure along with a number of artificial fiducial points. The camera records the exposure number, the Julian date, and the time of the beginning of the exposure within one-sec accuracy. It also records a considerable amount of written information, such as the film type and program sequence being used.

The cameras have been greatly modified by additions to their original form, but most of the major characteristics are unchanged. For example, the altimeter in the camera was of no use to us, but the housing of this instrument was ideal as a case for electric clocks we assembled. The cameras were completely rewired to control the additional functions that had been added.

The major dismemberment of the original T-11 was the removal of the entire Rapidyn shutter assembly. This excellent mechanism was useless for our application.

Shutter

Meteor cameras generally utilize a rotating shutter to occult the optics at a regular and known rate. For most optics, where the aperture is smaller than the format, it is convenient to use an objective shutter. In other cases, the Super-Schmidt Meteor Camera for example, rotating focal-plane shutters have been used. The focal-plane shutter has an advantage over the objective shutter in that it introduces extremely sharp breaks in the trail; thus the determination of the time interval from one break to the next depends only on the geometry of the meteor trail with respect to the center of rotation of the shutter and consequently can be easily and accurately computed. For objective shutters there exists at best a complex empirical relationship between the direction of the meteor's motion, its position relative to the rotation center of the shutter, the position of the meteor with respect to the optical axis, the period of the rotation of the shutter, and--the quantity needed--the interval of time between breaks.

For the meteorite cameras we have departed from the usual meteor shutter in two respects and for the following reasons. (1) Although the aperture of the camera is small, the wide field would require an inordinately large objective shutter. (2) We require of the shutter not only that it chop the meteor at known instants of time but also that it chop it with a controlled irregularity that will permit us to determine the instant of the meteor's appearance (see Shutter Coder).

To overcome the faults inherent in an objective shutter for this application, we decided to put the shutter in the same plane that the Rapidyn shutter occupied--midway between the front and rear elements of the lens. There is an air space of about 3/16" between the two sets of elements that make up the Metrogon lens. The camera body is constructed in such a way that it would not be feasible to operate a rotating shutter in this area. We have designed and developed a new type of shutter, based on principles employed in certain magnetic latching relays, which we call a "switching shutter."

The entire shutter mechanism (Figure 4) consists of an Alnico permanent magnet, a pair of pole pieces, an electromagnetic coil, a soft iron coil core constrained by a shaft and ball bearings to rotate about an axis perpendicular to the permanent magnetic field, and a thin blade--the shutter itself-- attached to this core. With no power in the coil, the core is stable in either extreme position. When voltage of the proper polarity is applied to the coil, the core is magnetized, both of its ends are repelled by the pole pieces of the permanent field, and the shutter switches to the opposite position. With reverse polarity in the coil, it returns to the initial position. In one position the shutter occults the optics; in the other position the aperture is clear. The transfer time of the shutter from one position to the other is of the order of five msec, during which time the coil requires about ten watts. The mechanism has been tested at 40 cps by increasing the coil current. It is used at 20 cps in our application. One shutter, run for life tests, switched 5×10^8 times without signs of appreciable wear.

Since the end of the shutter blade is about 2 1/2" from the pivot point, some care must be taken to minimize the bounce of the core when it is driven against the pole piece. We find that 1/8" wall Tygon tubing slipped over the core provides excellent damping. The core rotates about 7° when the shutter is switched. The bounce at the end of the stroke is less than 1/20 of this; thus the width of the blade need be only very slightly larger than the aperture stop it occults. The bounce is nearly independent of the shutter transfer time, since the locking force of the magnetic field is increased when the transfer time is increased.

Oscillations of the shutter normal to its switching plane are a far more serious problem. To accomplish the rather rapid transfer times, the shutter must be kept very light. In any case, its thickness is controlled by the 0.1 inch available between the lens elements. There is no external vertical constraint on the blade (until it vibrates enough to hit the optics!), and oscillations of 0.2" amplitude are discouragingly easy to produce with many of the blade materials tried. We require of a blade that it (a) be as light as possible--a few grams at most; (b) have a sufficiently high stiffness-to-weight ratio to prevent it from drooping by more than about 0.1" over 2 1/2"; (c) have a sufficient strength-to-weight ratio along the long axis to withstand the impact at the end of the stroke; and (d) possess a degree of internal damping, or "deadness," to minimize the oscillation in the vertical mode. Of these, (b) and (c) can be rigorously specified and easily met. Most of the design problems revolved around empirical tests for materials that satisfy (d). Certain ribbed metal structures and a number of molded plastics were found to be barely adequate. The final solution--probably too bizarre to try immediately--was a balsa wood blade, a material unqualifiedly superior in all important respects. The blades, blanked out of standard 1/8" x 3/4" model airplane stock and tapered to the appropriate thickness on a drill press with a sanding wheel and a simple jig, are attached to a 3/8" metal stub extending from the core with an epoxy.

Shutter Coder

We need to know the instant of appearance of the meteors we photograph to within several seconds' accuracy so that the radiants, and thus the orbits, may be determined. To obtain these data, the shutter breaks introduced into the meteor trail by the switching shutter are coded in such a way that the meteor trail will record its own time as it leaves its track on the film.

The time interval between the beginning of the exposure and the appearance of the meteor is indicated by the absence of certain dashes and the absence of a particular break (Frontispiece). (A dash is that part of the meteor trail represented by exposure on the film, and a break is that portion represented by no exposure.) Every 26th break is omitted; i.e., the shutter is locked open for one break, thus causing the two adjoining dashes to be

connected. The dash following this excluded break is designated as dash 0, the next number 1, etc., serially to 24. For three of these remaining shutter cycles (1 through 24) the shutter is locked closed according to a prearranged program. The sequence of missing dashes is changed every 10.4 sec, and the numbers of the missing dashes, as determined by inspecting the film and counting from dash 1, is a measure of the number of 10.4-sec intervals that have passed since the beginning of the exposure.

We eliminate from the code all numbers where a "digit" is equal to or smaller than any digit to its left. Thus, the number 1, 5, 13, can never be confused with the number 5, 1, 13, because the latter number is excluded from the counting system.

With such a system it is necessary to eliminate three dashes of each 24 in order to have enough unique combinations to permit a four-hour exposure with a ± 10-sec accuracy in the time determination of the meteor. It is desirable--and not difficult--to prevent large single sections of the meteor from being void of breaks. This is accomplished by forbidding any digit to the left to be less than two greater than a digit to its right. Thus, the number 1 3 5 is the first number in the counting system; this is followed by 1 3 6, 1 3 7 ... 1 3 24, 1 4 6, 1 4 7 ... 1 22 24, 2 4 6 ... 20 22 24.

This relatively complex code is generated by three standard stepping switches and a half dozen relays, a simplicity made possible by design of a code whose logic was compatible with available devices rather than the more usual--and far more expensive--technique of designing devices. The condition of the coding circuit is read out of a 26-point commutator, which is geared directly from the synchronous motor that generates the shutter pulses.

Filter, Capping Shutter, and Diaphragm

A neutral-density filter (D = 0.75) and a capping shutter are mounted objectively and controlled by rotary solenoids. The filter is used to extend the exposure time during periods of bright sky and, together with the diaphragm, to extend the dynamic range of the optical system for extremely bright meteors.

The diaphragm, with two positions, has been installed in the air space between the front and rear lens element adjacent to the switching shutter. It is solenoid operated. In the normal position the lens is at f/6.3; when the solenoid is activated the system is about f/20.

Sky Photometer

The sky photometers consist of photoelectric detectors--one mounted on each camera--and the associate electronics. The photomultipliers are protected by the capping shutter during the day. The photometers detect gross light levels--integrated, steady state, and transient--in the night sky and perform certain switch closures when detection is made.

The detectors are 931A photomultipliers exposed directly to the sky. No optics are used. This photomultiplier employed in this fashion has a field of view and vignetting properties comparable to that of the camera it will monitor.

Each photometer performs four functions.

(1) Exposure meter. The photometers serve, together, as an exposure meter for the station to prevent overexposure of the film. A measurement of the luminous energy reaching the photocathode is assumed to be proportional to the luminous energy reaching the film of the cameras. Whenever any photometer has received a certain unit of luminous energy (approximately 2 min exposure on a dark sky), it transmits a pulse to a counter common to all the photometers. When the counter has received a predetermined number of pulses, the exposure is terminated on all four cameras and a new exposure is commenced.

Although in certain conditions--particularly with a bright moon--one camera may be overexposed before the total light received by all four photometers is sufficient to close the station, it would be needlessly complex and costly to operate each of the cameras on a separate program.

(2) Bright Sky. The measurement of the steady state anode current of each photomultiplier is made to determine the brightness of the sky as seen by each camera. When a certain level is exceeded, the filter is introduced in front of that particular camera and its photomultiplier, thus extending the exposure time for all of the cameras at the station.

To guard against the possibility of a false "Bright Sky" reading caused by some transient light, the filter is removed for ten sec every 10 min to permit the photometer to make a new decision on the state of the sky. However, if the sky is extremely bright (full moon on field), the photometer may detect Bright Sky through the filter. In such cases, the 10 sec review of the sky is omitted to protect the photomultiplier from a damaging overload.

(3) Low pulse. In order to record the time of passage of bright meteors (magnitude -4 or brighter), the AC component of the output of each photometer is detected and used to pulse the data chamber lights in that particular camera a second time (the first time being at the beginning of the exposure). The clock in this camera will then have a double exposure. These data can be readily deciphered by referring to the clock reading made at the beginning of the exposure of one of the other three cameras at that station.

(4) High pulse. The very bright meteors that are of greatest interest to us cannot only exceed the dynamic range of our optical system with regard to accurate photometry but can in fact be bright enough to seriously fog the film. To guard against this, the photometers are also used to detect very bright ($M < -15$) light pulses, at which time the filter is inserted and the diaphragm changed to f/20 for the duration of the meteor.

Fiducial Points

Fiducial points are inserted into the trailed star images by increasing the aperture for ten sec of every ten min (Frontispiece). The switching shutter is locked in an open position except for the three code marks each 1.3 seconds, and the filter, if it is in place, is removed. The enhanced images of the star trails at these points serve as fiducial marks for measurement of the meteor trail. Such a system is superior to the usual technique of closing the aperture for timed star breaks in that the former system eliminates a considerable part of the needless star background, allowing for longer exposures, and makes it possible to utilize stars for fiducial points at very high declination.

Cloud Detector

Since our stations are unmanned, it has been worthwhile to spend considerable effort in devising a system that will permit the station to make some judgment on the state of the sky. To keep the system reasonably simple, we

make this judgment on the presence or absence of light from the star Polaris. If Polaris is visible to the detector either faintly or occasionally, the station will operate as normal, but if Polaris is occulted continuously by dense clouds, we are willing to conclude that the entire sky is unsatisfactory for photography of even extremely bright objects.

The detector consists of a two-inch aperture telescope with optical axis directed at the celestial pole, a focal-plane shutter, and a 931A photomultiplier and amplifier. The shutter is driven at 25 RPM. The axis of the shutter is on the optical axis of the telescope. Four slots of 45° each are cut into the shutter on the circumference on which the image of Polaris falls. The 100-cycle signal generated by Polaris and the shutter is detected and amplified. This system can detect Polaris when the extinction is three magnitudes. The output of the amplifier is fed through a thermal delay relay with a 1-min time constant. The characteristics of the delay relay are such that it will also operate if Polaris is visible for approximately 50 percent of the time over a two min period. Furthermore, the relay will remain closed for about one min if the signal is removed. This electrical inertia is built into the system so that the cloud detector will permit operation during a scattered cloud condition.

The cloud detector operates continuously until Polaris is detected and the exposure commences. The detector is then shut off until ten min before the next exposure is supposed to begin.

Since the cloud detector has a primary control on the station, we have made provisions for its possible failure. In the same focal-plane shutter that chops the light from Polaris, 16 equally spaced holes have been made in the outer circumference. Behind this region is a small incandescent lamp that is chopped by the shutter at 400 cycles. This light is seen by the same phototube that detects Polaris. The 400-cycle signal is separated from the 100-cycle signal by filtering and is amplified separately. If Polaris is not visible, we then interrogate--by elementary logic and circuitry--the cloud detector concerning its 400-cycle signal. If this is not observed, we conclude that the cloud detector is not functioning and exposures are carried out whether it is clear or cloudy.

Programmer

The programmer is a switching and logic circuit that (a) generates timing pulses; (b) accepts, as input, signals from the various command systems; and (c) supplies, as output, signals to all of the camera functions.

The station is turned on at night by the action of a 24-hour timer and a pair of commercial photometers designed to turn on street lights at dusk. These night lighters, as they are called, are used primarily to protect the other photometers in case of a failure of the 24-hour timer. Since in their usual application the night lighters are considered to have failed safe when they indicate darkness, we use two of these units in series. By facing one of them east and the other west, we achieve added sensitivity for both twilights.

The relays in the night lighters are constructed to be slow operating so that they will not be triggered by lightning flashes. However, we have cases on record of similar night lighters being activated by a very bright meteor. To prevent the station from being closed at the moment of greatest interest, the night lighters are used to control two time-delay relays which require power for approximately ten sec before they close and will remain closed for approximately 20 sec after power is removed.

Two classes of exposure are controlled by the programmer: "twilight" and "nighttime" exposures. The twilight exposures are made each night, regardless of the weather. In the early evening hours, when the bolide frequency is high, it will be dark enough to take short exposures but too bright to turn on the photometers and cloud detectors. The twilight exposures are made during this period. The duration of these exposures can be varied. At the end of the twilight series the nighttime exposures begin. These exposures start only when the cloud detector indicates a clear sky; they are stopped either by action of a preset timer (two-hour exposures are usual) or by the exposure meter.

The prototype station has operated in Havana, Illinois, since March 1963. Other stations were added to the network after October 1963; the 16th was installed in early May 1964. By March 1, 1964, ten stations were operating with good reliability; since then we have considered ourselves an operating network.

Figure 1.--An area map of the Midwest showing the location of the 16 camera stations and the field headquarters at Lincoln, Nebraska.

Figure 2.--The prototype camera station at Havana, Illinois, which has been in operation since March 1963.

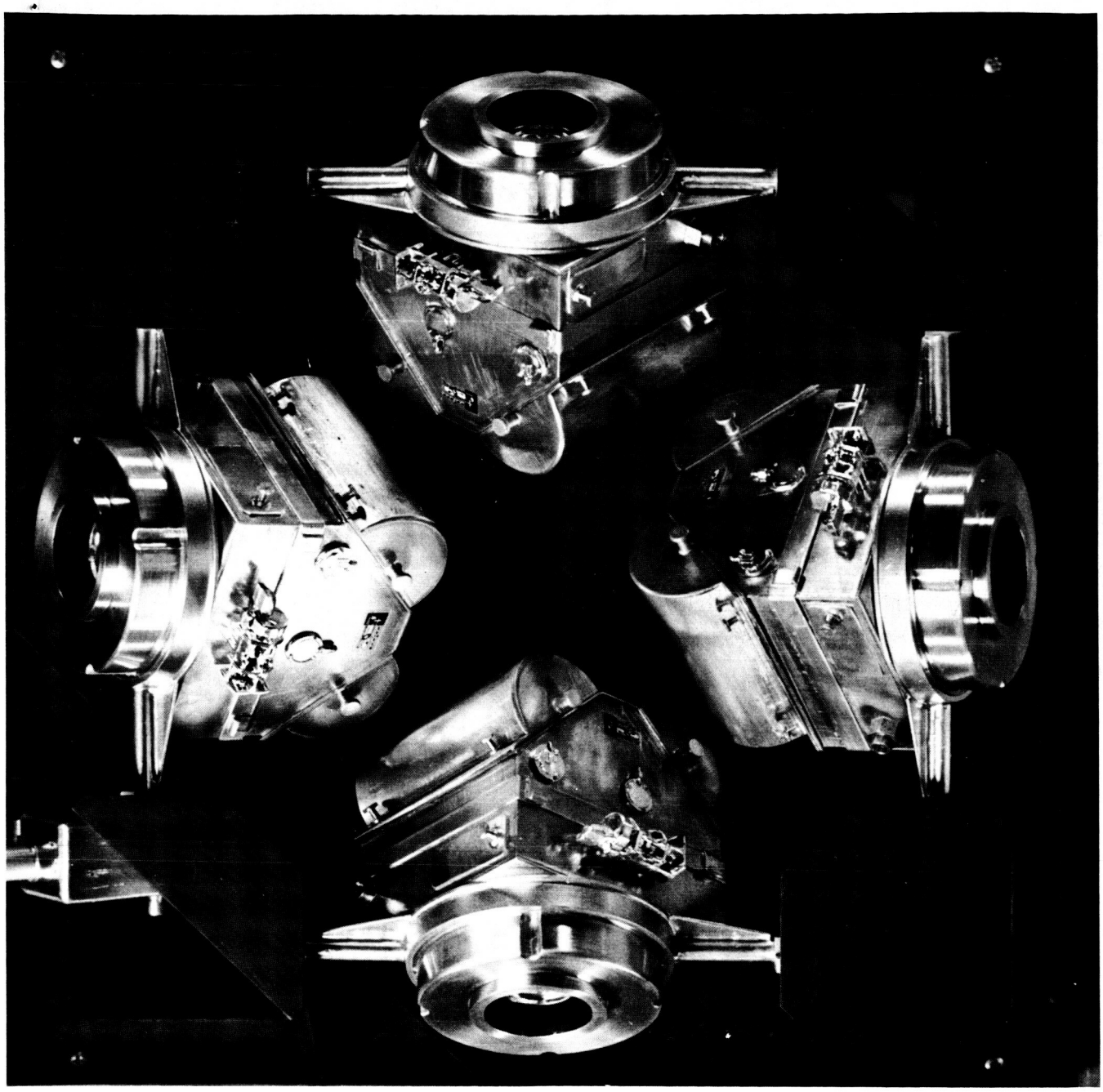

Figure 3.--A bird's-eye view of the scale model camera house, with the roof removed to show the four modified T-11 cameras.

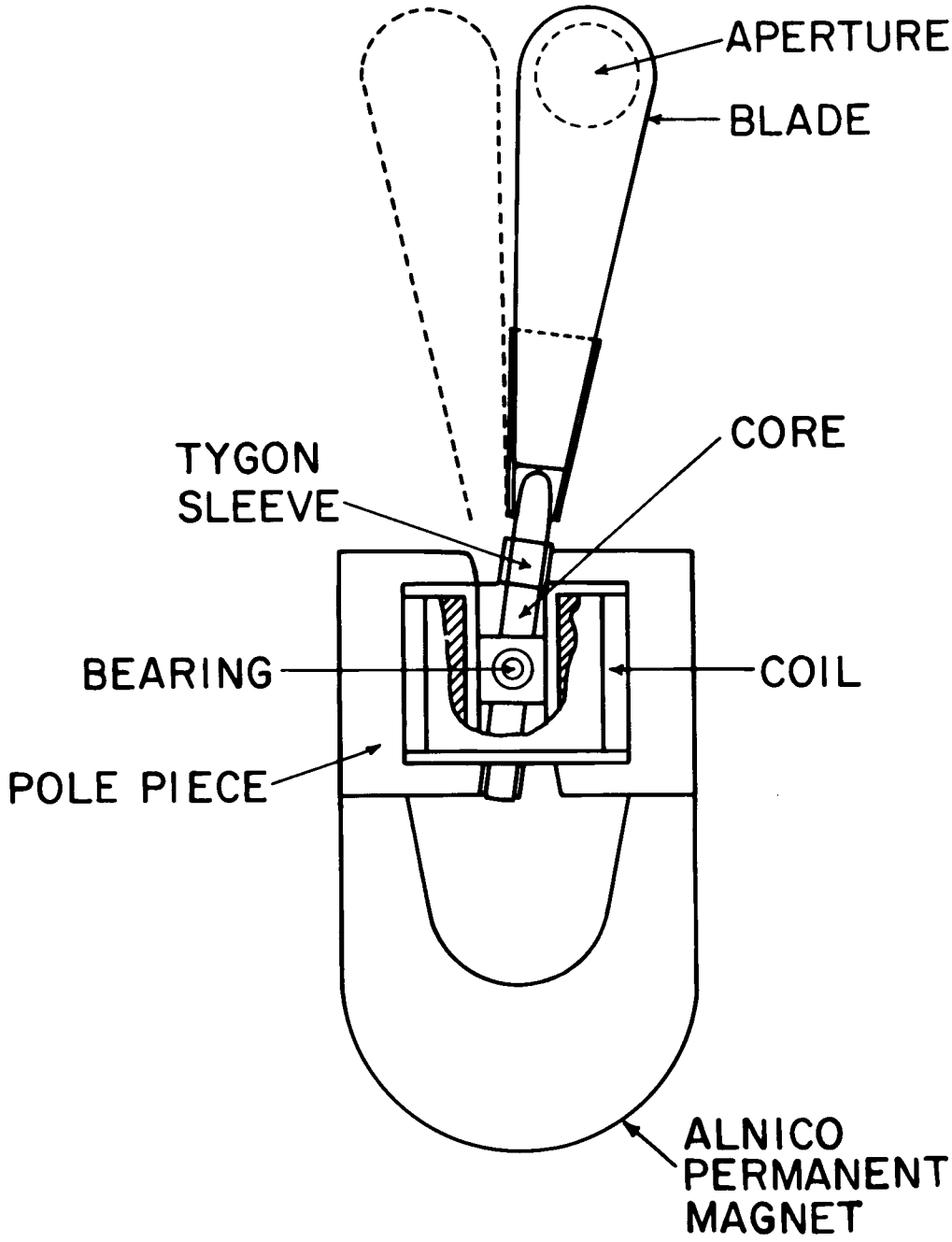

Figure 4.--A schematic of the specially designed switching shutter.

Table 1.--Station coordinates

Station Number	Site	Latitude	Longitude
1	Havana, Illinois	40° 13' 12".27	90° 01' 13".10
2	Milan, Missouri	40° 14' 14".28	93° 06' 46".01
3	Vichy, Missouri	38° 08' 09".23	91° 45' 55".89
4	Vinton, Iowa	42° 11' 43".94	92° 06' 48".63
5	Carroll, Iowa	42° 02' 13".06	94° 53' 00".71
6	Steinauer, Nebraska	40° 12' 02".64	96° 12' 13".33
7	Pleasanton, Kansas	38° 07' 32".37	94° 44' 35".00
8	Republican City, Nebraska	40° 05' 17".64	99° 12' 36".38
9	Neligh, Nebraska	42° 07' 04".56	98° 02' 35".34
10	Flandreau, South Dakota	44° 00' 25".140	96° 35' 14".837
11	Reliance, South Dakota	43° 57' 56".01	99° 35' 06".22
12	Mullen, Nebraska	42° 02' 04".99	101° 02' 27".69
13	McPherson, Kansas	38° 20' 19".12	97° 40' 02".74
14	Garden City, Kansas	37° 59' 34".07	100° 48' 42".33
15	Woodward, Oklahoma	36° 26' 12".535	99° 31' 02".498
16	Hominy, Oklahoma	36° 28' 18".99	96° 22' 57".82