X-543-65-125

NASA TM X-55249

FACILITY FORM 602

N65-29801 (ACCESSION NUMBER)

(THRU)

120 (PAGES)

1 (CODE)

(NASA CR OR TMX OR AD NUMBER)

08 (CATEGORY)

EXPLORER 17 DATA REDUCTION

PROGRAM DOCUMENTATION AND REPORT FOR THE PRESSURE DENSITY PROGRAM

BY

CHARLES HANLEY

WILLIAM GOUGH

GPO PRICE $ _____

CFSTI PRICE(S) $ _____

Hard copy (HC) 4.00

Microfiche (MF) .75

ff 653 July 65

MARCH 15, 1965

GODDARD SPACE FLIGHT CENTER

GREENBELT, MARYLAND

X-543-65-125

EXPLORER 17 DATA REDUCTION

PROGRAM DOCUMENTATION AND REPORT FOR

THE PRESSURE DENSITY PROGRAM

by

Charles Hanley

Advanced Projects Branch
Systems Analysis & Program Design Section

and

William Gough

Advanced Projects Branch
Programming Methods Section

March 15, 1965

Goddard Space Flight Center
Greenbelt, Maryland

ACKNOWLEDGMENT

The authors wish to gratefully acknowledge the contributions to this document made by Mr. George Newton and Mrs. Virginia Zanner of the Physics Branch, Aeronomy & Meteorology Division and also those contributions of Mr. Alton Forehand and William Coker of the Advanced Projects Branch, Data Systems Division

CONTENTS

INTRODUCTION 1

GENERAL DESCRIPTION 1

1. Input to Pressure-Density Program 2

2. Output from Pressure Density Program. 2

MATHEMATICAL DESCRIPTION 3

GAUGE ORIENTATION-DENSITY COMPUTATION 8

Equatorial Gauges (BA 2 or RH 1) 8

Non-Equatorial Gauges (BA 1 and RH 2) 9

OTHER COMPUTATIONS 11

STRUCTURE OF THE PROGRAM 13

SUBROUTINES 39

OPERATING INSTRUCTIONS. 48

Sense Switches 48

DATA CARDS 48

TAPE FORMATS 50

Input Data Tapes 50

Output Data Tapes 50

SAMPLE PROGRAM OUTPUT 52

FORTRAN II LISTING (PDP). 81

S-6 DATA REDUCTION
PROGRAM DOCUMENTATION AND REPORT FOR
THE PRESSURE DENSITY PROGRAM

by

Charles Hanley

and

William Gough

INTRODUCTION

The Pressure Density Program (PDP) is a digital computer program for processing data consisting of voltage measurements of the neutral atmospheric density and temperature.

GENERAL DESCRIPTION

The problem involves analyses of the data recorded by the Bayard-Alpert (BA 1 & 2) and Redhead (RH 1 & 2) gauges. These four gauges combine to cover the expected 10^{-6} torr to 10^{-11} torr pressure range, and have been physically positioned on the satellite as follows:

1. Bayard-Alpert gauge #1 (BA 1) lower hemisphere
2. Bayard-Alpert gauge #2 (BA 2) equator
3. Redhead gauge #1 (RH 1) equator
4. Redhead gauge #2 (RH 2) upper hemisphere

These gauges are calibrated by laboratory and inflight measurements. The calibration values are represented by a single or set of functions.

1. Input to Pressure-Density Program

a. Input data provided by the experimenter

Laboratory calibration values for each sensor (gauge), hi and lo values for the Bayard-Alpert gauges, hi (H_c), lo (L_c), and medium (M_c) values for the Redhead gauges.

Conversion function (table) for each sensor (I_c vs. V_c)

Table of sensitivities (η) versus current (I_c) for each gauge

k factor for density calculations

b. Input from telemetry data

In-flight calibration values, hi (H_f), lo (L_f) and medium (M_f) for Redhead gauges only.

Selected DC voltage data for all four gauges (V)

Selected AC voltage data for Bayard-Alpert gauges (V_a)

Electronics card temperature (T_c)

Electrometer temperature (T_e)

c. Input from aspect reduction

Maximum ram velocity for each gauge (V_{rx})

Minimum ram velocity for each gauge (V_{rn})

Longitude, latitude, altitude, local solar time (position of the sun when data was received) and spin period.

2. Output from Pressure Density Program

The output from the program is a computed density and pressure history that is suitable for analysis by the experimenter.

MATHEMATICAL DESCRIPTION

Because of differences of design and gauge characteristics it is necessary to discuss the mathematics involved in computing pressure for the BA and RH gauges separately.

The density computations will be developed as functions of the gauge orientation on the satellite and will be divided into equatorial and non-equatorial gauge categories.

a. Definitions

The terms used in the following mathematical discussions are defined as follows:

Symbol		Definition	Units	Source
V	=	raw telemetered input data	volts	telemetry
ΔV	=	calibration adjustment	volts	computed
I_c	=	current	amperes	computed
η_b	=	sensitivity	—	computed
η_r	=		—	Lab
A_{r1}	=		—	Lab
A_{r2}	=	table of values (see Fig. 3)	—	Lab
B_{r1}	=		—	Lab
B_{r2}	=		—	Lab
P	=	pressure	torrs	computed
K	=	unit conversion constant	grams kilometers/torr/sec. squared	computed
H_L	=	high lab calibration values	volts	Lab
H_f	=	high flight calibration values	volts	telemetry
M_L	=	medium lab calibration values	volts	Lab
M_f	=	medium flight calibration values	volts	telemetry

Symbol		Definition	Units	Source
L_L	=	low lab calibration values	volts	Lab
L_f	=	low flight calibration values	volts	telemetry
I_e	=	emission current	amperes	telemetry
V'	=	adjusted telemetered voltage	volts	computed
V_{ba1}	=	voltage vs current (I_n) conversion table	—	Monitor Control Program computation
V_{ba2}	=	voltage vs current (I_n) conversion table	—	Monitor Control Program computation
V_{rh_1}	=	voltage vs current table	—	Lab
V_{rh_2}	=	voltage vs current table	—	Lab
P_x	=	maximum pressure	torrs	computed
P_n	=	minimum pressure	torrs	computed
V_{pi}	=	most probable velocity of particles inside gauge	cm/sec	computed
V_{p0}	=	most probable velocity of particles outside gauge	cm/sec	computed
V_{rx}	=	maximum ram velocity	km/sec	aspect tape
V_{rn}	=	minimum ram velocity	km/sec	aspect tape
V_{ave}	=	average ram velocity	km/sec	aspect tape
R_0	=	gas constant	CGS	experimenter
T_0	=	outside temperature	deg. Kelvin	experimenter
T_i	=	inside temperature	deg. Kelvin	experimenter
M_0	=	outside mass	grams/mole	experimenter
M_i	=	inside mass	grams/mole	experimenter
S_x	=	velocity ratio	—	computed
S_n	=	velocity ratio	—	computed
D_1	=	density	—	computed
D_2	=	density	—	computed
V_x	=	maximum voltage	volts	computed

Symbol		Definition	Units	Source
$V_{x'}$	=	adjusted maximum voltage	volts	computed
V_n	=	minimum voltage	volts	computed
$V_{n'}$	=	adjusted minimum voltage	volts	computed
I_x	=	maximum current	amperes	computed
I_n	=	minimum current	amperes	computed
T_x	=	time of maximum pressure	sec	computed
T_n	=	time of minimum pressure	sec	computed
k	=	sensitivity factor	—	experimenter

GAUGE CHARACTERISTICS–PRESSURE COMPUTATIONS
BAYARD-ALPERT GAUGES

BA 1

$\Delta V = 0$

$V' = V + \Delta V$

$$\text{Log } Ic = \text{Log } I_n + \left(\frac{V' - Vba_n}{Vba1_{n+1} - Vba_n}\right)(\text{Log } I_{n+1} - \text{Log } I_n)$$

(see Figure B1)

$Ic = \text{antilog } (\log \pm c)$

now

$\eta_b = 1/k \cdot I_e$ (S = sensitivity)

where

$k = 97.5$

then

$P = Ic/\eta_b$

Vba1	I_n
x.xxx	x.xxE-xx
$Vba1_2$	Log I_2
.	.
.	.
.	.
$Vba1_{18}$	Log I_{18}

Figure B1

BA 2

$\Delta V = .075$ volts

NOTE – Where no corresponding formulas or values are given for BA 2, they are the same as those for BA 1.

(see Figure B2)

$k = 119.5$

Vba2	I_n
$Vba2_1$	Log I_1
$Vba2_2$	Log I_2
.	.
.	.
.	.
$Vba2_{18}$	Log I_{18}

Figure B2

GAUGE CHARACTERISTICS – PRESSURE COMPUTATIONS
REDHEAD GAUGES

RH 1

$$\Delta V = \frac{(HL - Hf) + (ML - Mf) + (LL - Lf)}{3}$$

$$V' = V_i + \Delta V$$

then

$$\text{Log Ic} = \text{Log } I_n + \left(\frac{V' - V_n}{V_{n+1} - V_n}\right)(\text{Log } I_{n+1} - \text{Log } I_n)$$

see Figure R1

$$\text{Ic} = \text{Antilog (Log Ic)}$$

Vrh1	Ic
x.xxx	x.xxE-xx*

Figure R1

then the program enters gauge sensitivity table (Figure R3)

Ic	RH 1 A	RH 1 B

Figure R3

RH 2

Figure R2 is the same as R1 in format, but the values are different.

Vrh2	Ic
x.xxx	x.xxE-xx*

Figure R2

See Figure R4

Ic	RH 2 A	RH 2 B

Figure R4

Having found A and B by table lookup (see Figure R3), the program computes Pressure using the following formula:

$$P = \frac{I_c}{B} + A$$

*Sample values

GAUGE ORIENTATION–DENSITY COMPUTATIONS

Following the pressure computations the program computes density. Computations of density are divided into equatorial and non-equatorial types depending on the gauge orientation on the satellite. The first of these types to be discussed will be equatorial.

Equatorial Gauges (BA 2 and RH 1)

Using the following parameters from the pressure program;

t = time

V = voltage

V' = adjusted voltage

P = Pressure

the density for the equatorial gauges is computed as follows.

P_x = maximum (P), P_n = minimum (P)

$\Delta P = P_x - P_n$ (over one spin cycle of .667 sec.)

$$V_{pi} = \sqrt{\frac{2 R_0 T_i}{M_i}}$$ (Most probable velocity of particles inside gauge)

$$V_{p0} = \sqrt{\frac{2 R_0 T_0}{M_0}}$$ (Most probable velocity of particles outside gauge)

where

$R_0 = 8.315 \times 10^7$

T_0 = 1000° Kelvin

T_i = 313° Kelvin

$M_0 = 16$

$M_i = 16$

V_{rx} = Max ram velocity (obtained from the aspect tape

$$\text{Density} = \frac{\Delta P \cdot K}{V_{rx}}$$

where

$$K = \frac{1333}{\sqrt{\pi} \cdot V_{pi} \cdot 10^5}$$

Non-Equatorial Gauges (BA 1 and RH 2)

The non-equatorial density computations use the same parameters and gas constant to obtain ΔP, V_{pi}, and V_{p0}. The program now computes:

$$S_x = \frac{V_{rx}}{V_{p0}} \quad \text{and} \quad S_n = \frac{V_{rn}}{V_{p0}}$$

where

V_{rn} = Minimum ram velocity for each gauge.

From S_x and S_n the program determines which of the cases described below is needed to solve for the atmospheric density in torr units.

Case 1

$$S_x > 1 \quad \text{and} \quad S_n \geq 1$$

$$D_1 = \frac{P_x \cdot K}{V_{rx}}$$

$$D_2 = \frac{\Delta P \cdot K}{2\,[V_{rx} - V_{ave}]}$$

where V_{ave} = Average ram velocity

Case 2

$$S_x > 1 \quad S_n < 1$$

$$D_1 = \frac{P_x \cdot K}{V_{rx}}$$

$$D_2 = \frac{1333 \cdot \Delta P \cdot M_0}{R_0 \cdot \sqrt{T_0 T_i}\ [F(S_x) - F(S_n)]}$$

where

$$F(s) = e^{-s^2} + s \cdot \sqrt{\pi}\ [1 + erf(s)]$$

where

$$erf(s) = \frac{a}{\pi} \cdot \int_0^s e^{-x^2}\ dx$$

Case 3

$$0 < S_x \leq 1$$

$$D_1 = 0$$

$$D_2 = \frac{1333\ \Delta P\ M_0}{R_0\ \sqrt{T_0\ T_i}\ [F(S_x) - F(S_n)]}$$

Case 4

$$S_x \leq 0$$

$$D_1 = 0$$

$$D_2 = 0$$

After case computations the program is ready to write out on tape the parameters required by the experimenter for each spin cycle. The output format is as follows:

	T_x, V_x, $V_{x'}$, I_x, P_x	
BA 1	Alt., Lat., Long., LST (Local Solar Time), ΔP, T_{rx}, V_{rx}	D_1 = x.xxxE-xx
	T_n, V_n, $V_{n'}$, I_n, P_n	D_2 = x.xxxE-xx

BA 2 same format as BA 1

RH 1 same format as BA 1

RH 2 same format as BA 1.

OTHER COMPUTATIONS

In addition to the computations for pressure and density values, the experimenter requested that certain parameters be computed and written out on the pressure plot tapes for plotting purposes.

F (s) is determined from the F(s) function using s computed as follows:

$$s = \frac{A + B \cos \theta}{V_{p0}}$$

where θ is determined by the formula:

$$\theta = \frac{(t - t_x) \cdot 9^\circ}{.0167}$$

The A and B above are described as:

$$A = V_{ave}$$

$$B = V_{rx} - V_{ave}$$

Both A and B are obtained from the aspect tape.

It is requested that P_i be normalized, which is accomplished by multiplying the raw pressure by the parameter M, where

$$M = \frac{V_{p0} \cdot F(S_x)}{P_x}$$

now

$$P_{norm} = P_i \cdot M$$

P_{norm} is later plotted against t (time) on the same graph as $V_{p0} \cdot F(s)$ vs θ.

STRUCTURE OF THE PROGRAM

Input-Output Flow Diagram

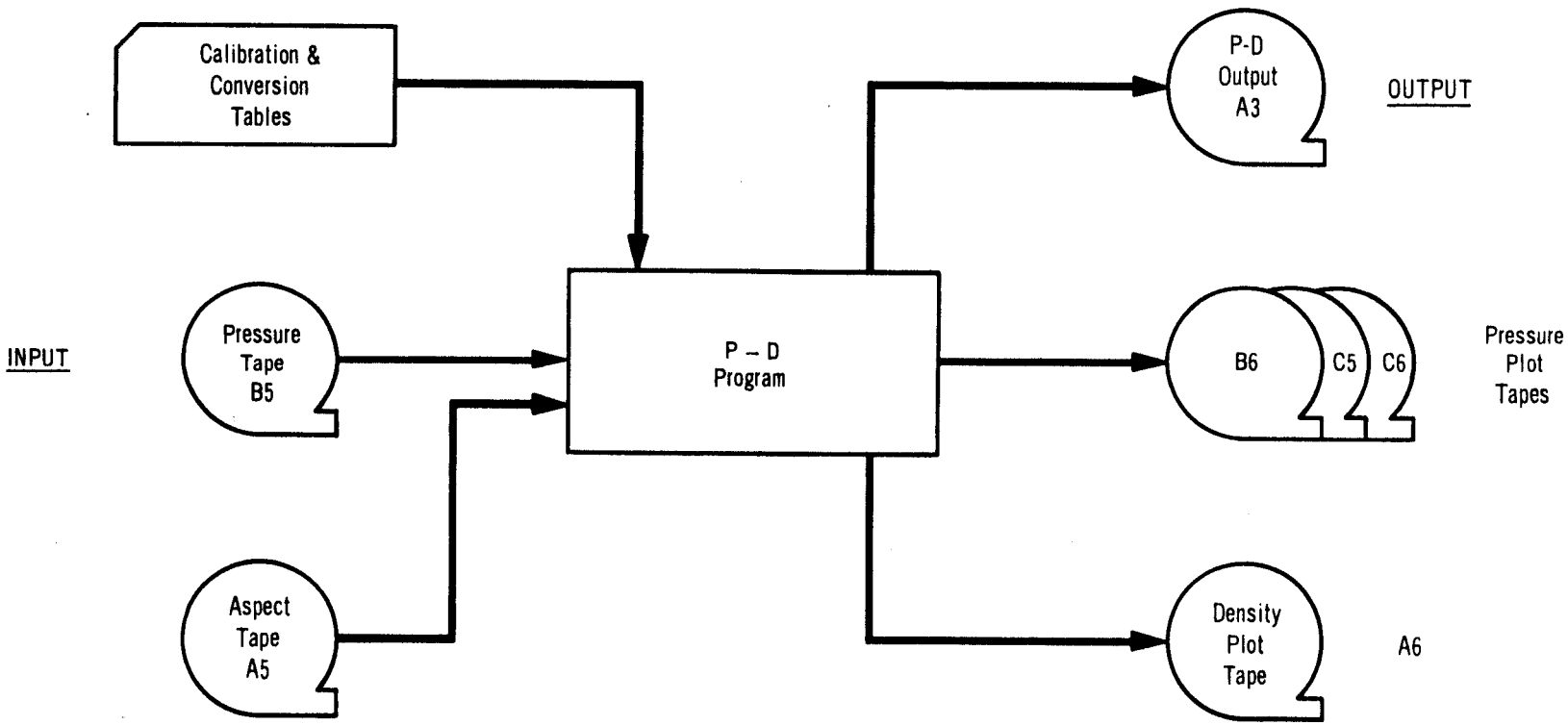

Pressure Density Program

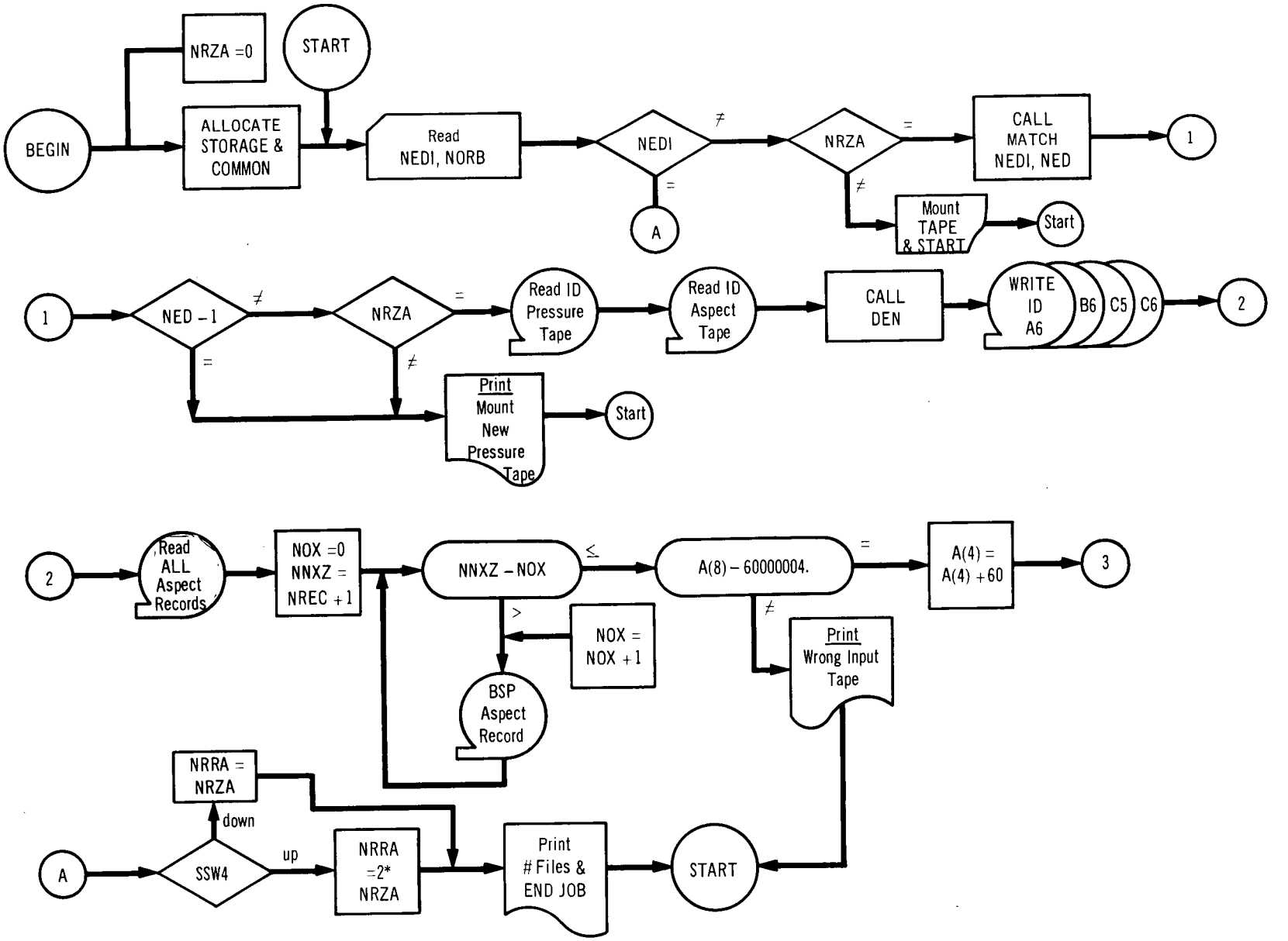

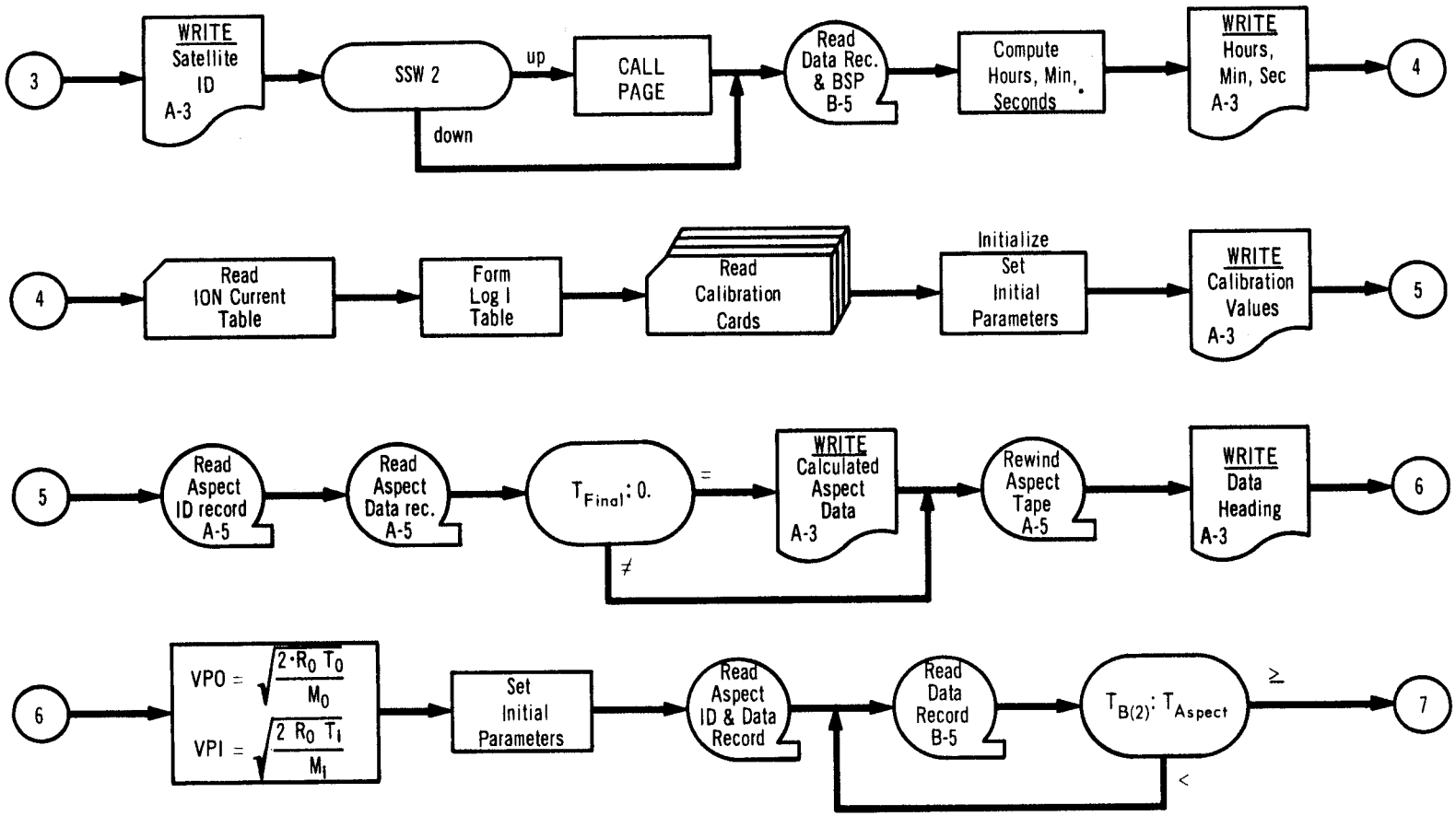
3
WRITE Satellite ID A-3
SSW 2
up
down
CALL PAGE
Read Data Rec. & BSP B-5
Compute Hours, Min, Seconds
WRITE Hours, Min, Sec A-3
4
4
Read ION Current Table
Form Log I Table
Read Calibration Cards
Initialize Set Initial Parameters
WRITE Calibration Values A-3
5
5
Read Aspect ID record A-5
Read Aspect Data rec. A-5
T_{Final}: 0.
=
≠
WRITE Calculated Aspect Data A-3
Rewind Aspect Tape A-5
WRITE Data Heading A-3
6
6
$VPO = \sqrt{\frac{2 \cdot R_0 T_0}{M_0}}$
$VPI = \sqrt{\frac{2 R_0 T_1}{M_1}}$
Set Initial Parameters
Read Aspect ID & Data Record
Read Data Record B-5
$T_{B(2)}$: T_{Aspect}
≥
<
7

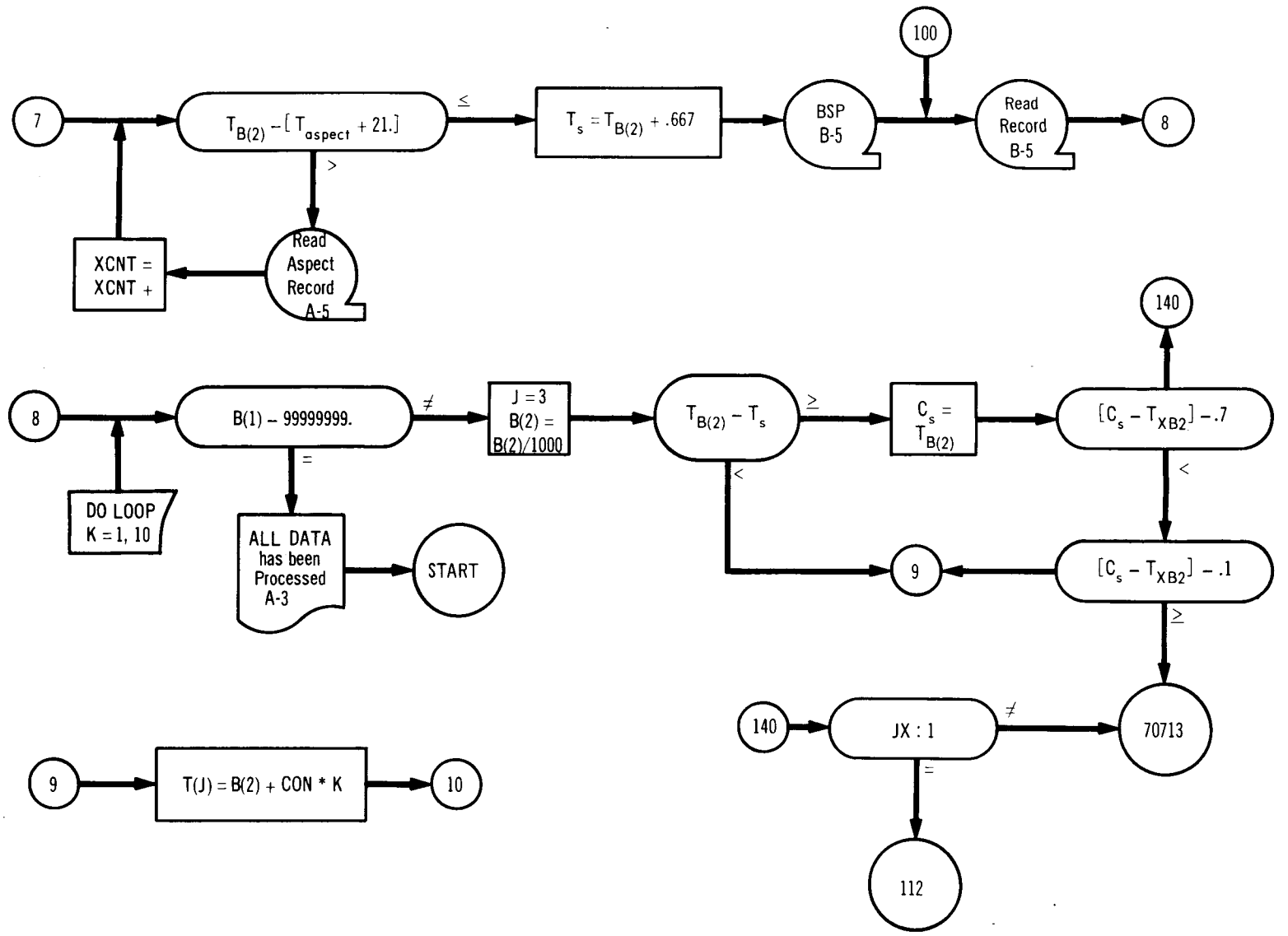
7
$T_{B(2)} - [T_{aspect} + 21.]$
≤
>
$T_s = T_{B(2)} + .667$
BSP B-5
100
Read Record B-5
8
XCNT = XCNT +
Read Aspect Record A-5
8
B(1) – 99999999.
≠
=
J = 3
B(2) = B(2)/1000
$T_{B(2)} - T_s$
≥
<
$C_s = T_{B(2)}$
$[C_s - T_{XB2}] - .7$
140
<
≥
$[C_s - T_{XB2}] - .1$
9
DO LOOP K = 1, 10
ALL DATA has been Processed A-3
START
140
JX : 1
≠
=
70713
112
9
T(J) = B(2) + CON * K
10

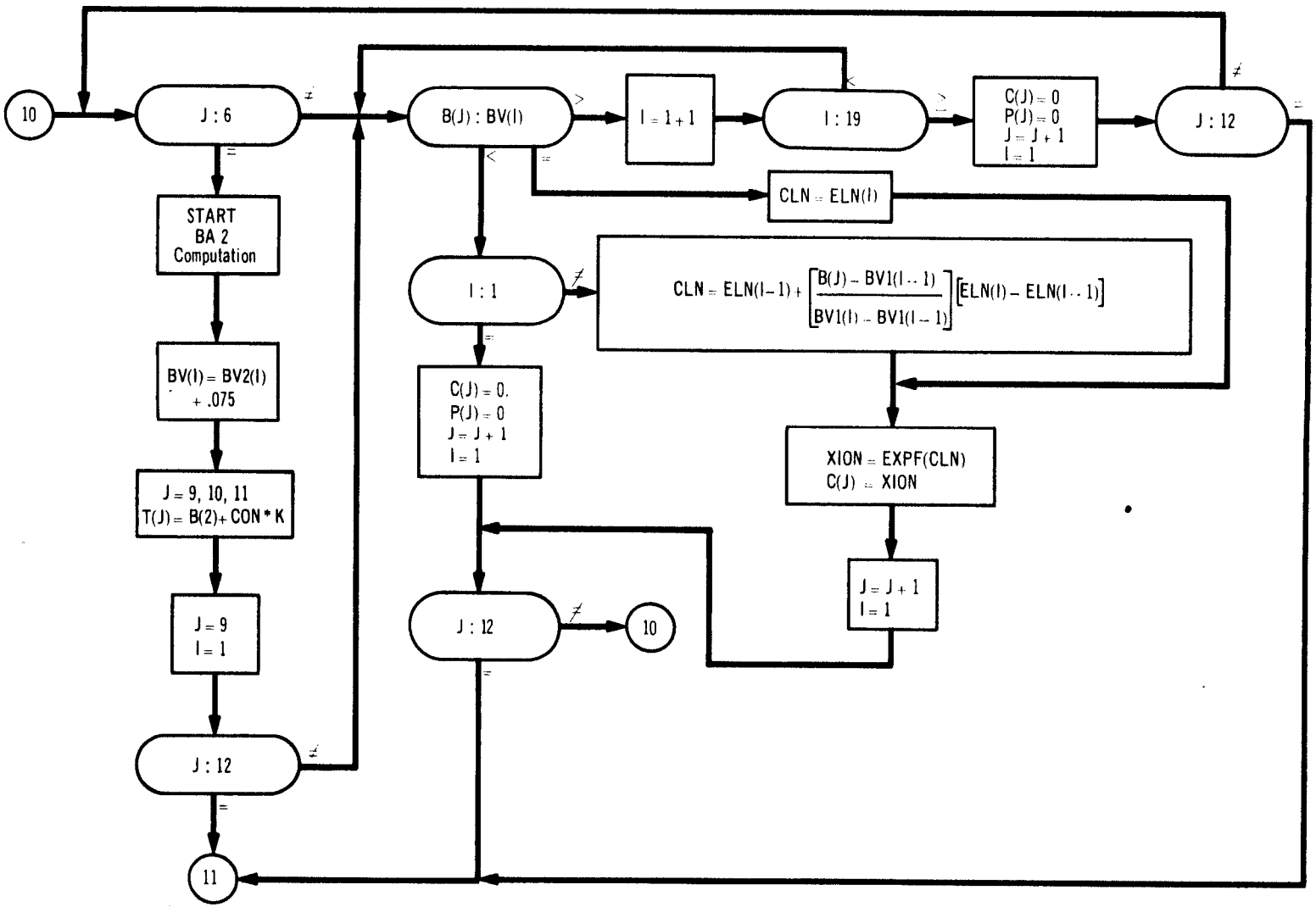
10
J : 6
START
BA 2
Computation
BV(I) = BV2(I)
+ .075
J = 9, 10, 11
T(J) = B(2)+ CON * K
J = 9
I = 1
J : 12
11
B(J) : BV(I)
I = I + 1
I : 19
C(J) = 0
P(J) = 0
J = J + 1
I = 1
J : 12
CLN = ELN(I)
I : 1
CLN = ELN(I-1) + [(B(J) - BV1(I-1)) / (BV1(I) - BV1(I-1))] [ELN(I) - ELN(I-1)]
C(J) = 0.
P(J) = 0
J = J + 1
I = 1
XION = EXPF(CLN)
C(J) = XION
J = J + 1
I = 1
J : 12
10

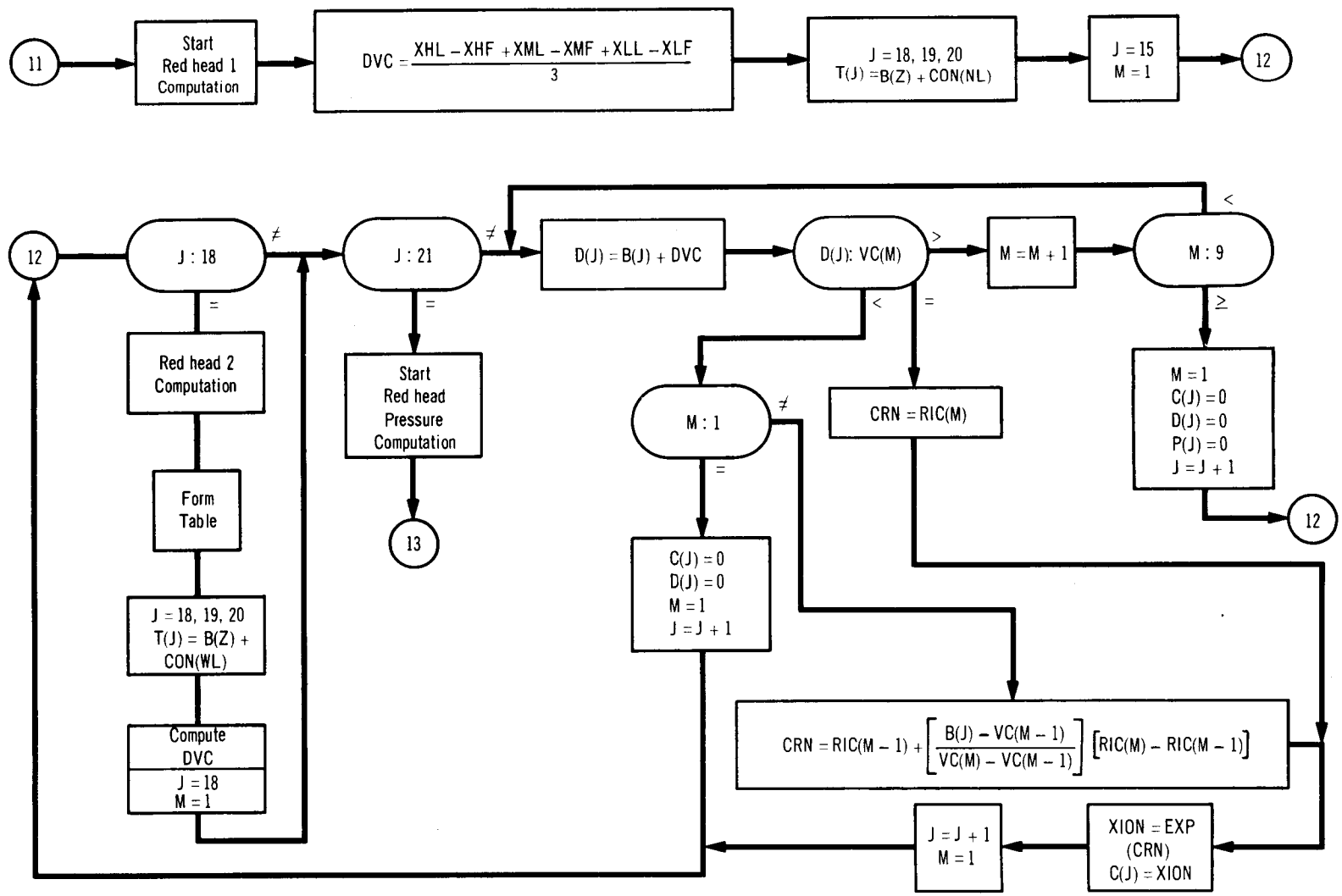
11
Start Red head 1 Computation
DVC = (XHL − XHF + XML − XMF + XLL − XLF) / 3
J = 18, 19, 20
T(J) = B(Z) + CON(NL)
J = 15
M = 1
12
12
J : 18
≠
=
Red head 2 Computation
Form Table
J = 18, 19, 20
T(J) = B(Z) + CON(WL)
Compute DVC
J = 18
M = 1
J : 21
≠
=
Start Red head Pressure Computation
13
D(J) = B(J) + DVC
D(J): VC(M)
>
<
=
M = M + 1
M : 9
<
≥
M = 1
C(J) = 0
D(J) = 0
P(J) = 0
J = J + 1
12
M : 1
≠
=
C(J) = 0
D(J) = 0
M = 1
J = J + 1
CRN = RIC(M)
CRN = RIC(M − 1) + [(B(J) − VC(M − 1)) / (VC(M) − VC(M − 1))] [RIC(M) − RIC(M − 1)]
XION = EXP (CRN)
C(J) = XION
J = J + 1
M = 1

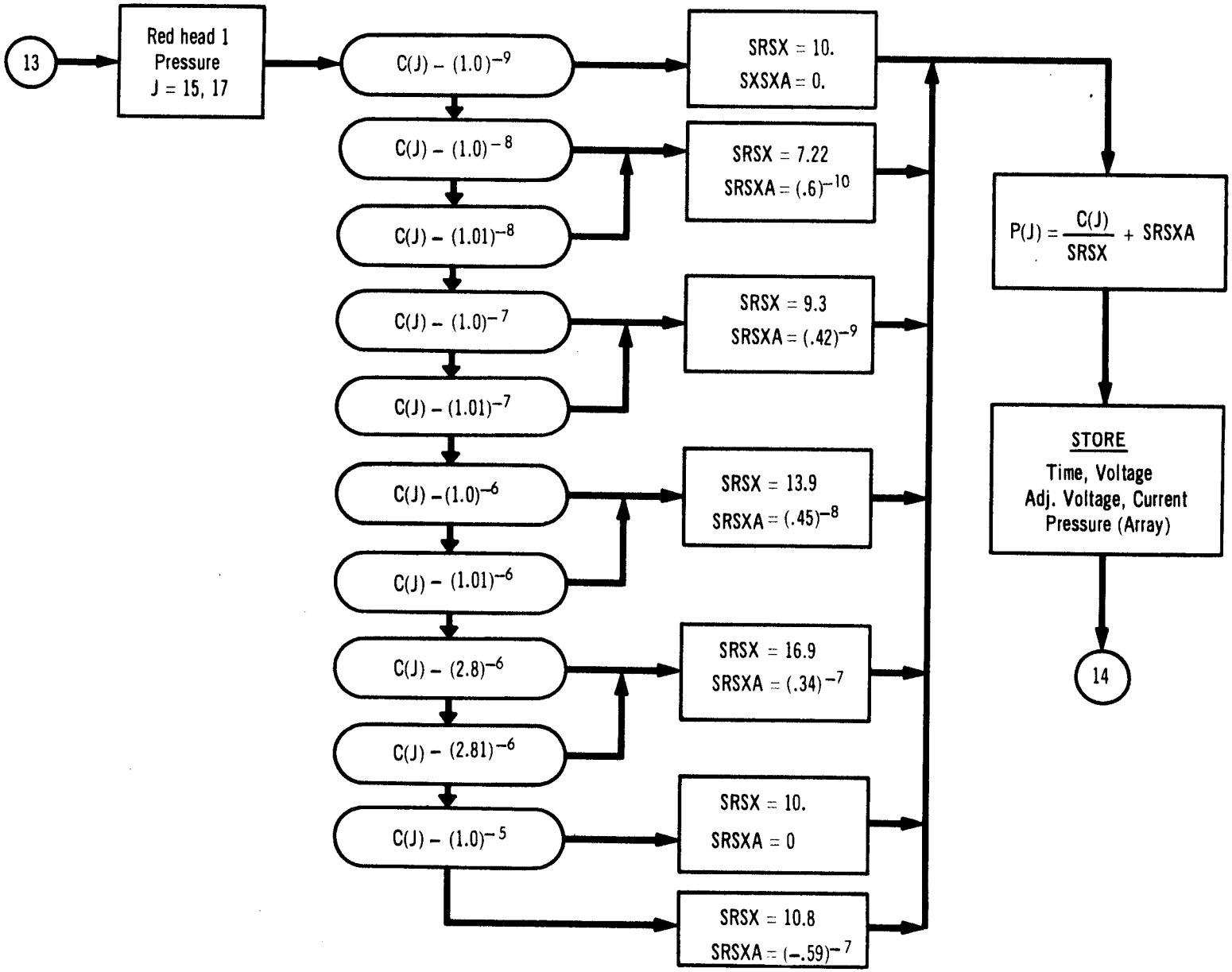
13
Red head 1
Pressure
J = 15, 17
C(J) – (1.0)$^{-9}$
C(J) – (1.0)$^{-8}$
C(J) – (1.01)$^{-8}$
C(J) – (1.0)$^{-7}$
C(J) – (1.01)$^{-7}$
C(J) – (1.0)$^{-6}$
C(J) – (1.01)$^{-6}$
C(J) – (2.8)$^{-6}$
C(J) – (2.81)$^{-6}$
C(J) – (1.0)$^{-5}$
SRSX = 10.
SXSXA = 0.
SRSX = 7.22
SRSXA = (.6)$^{-10}$
SRSX = 9.3
SRSXA = (.42)$^{-9}$
SRSX = 13.9
SRSXA = (.45)$^{-8}$
SRSX = 16.9
SRSXA = (.34)$^{-7}$
SRSX = 10.
SRSXA = 0
SRSX = 10.8
SRSXA = (–.59)$^{-7}$
P(J) = C(J) / SRSX + SRSXA
STORE
Time, Voltage
Adj. Voltage, Current
Pressure (Array)
14

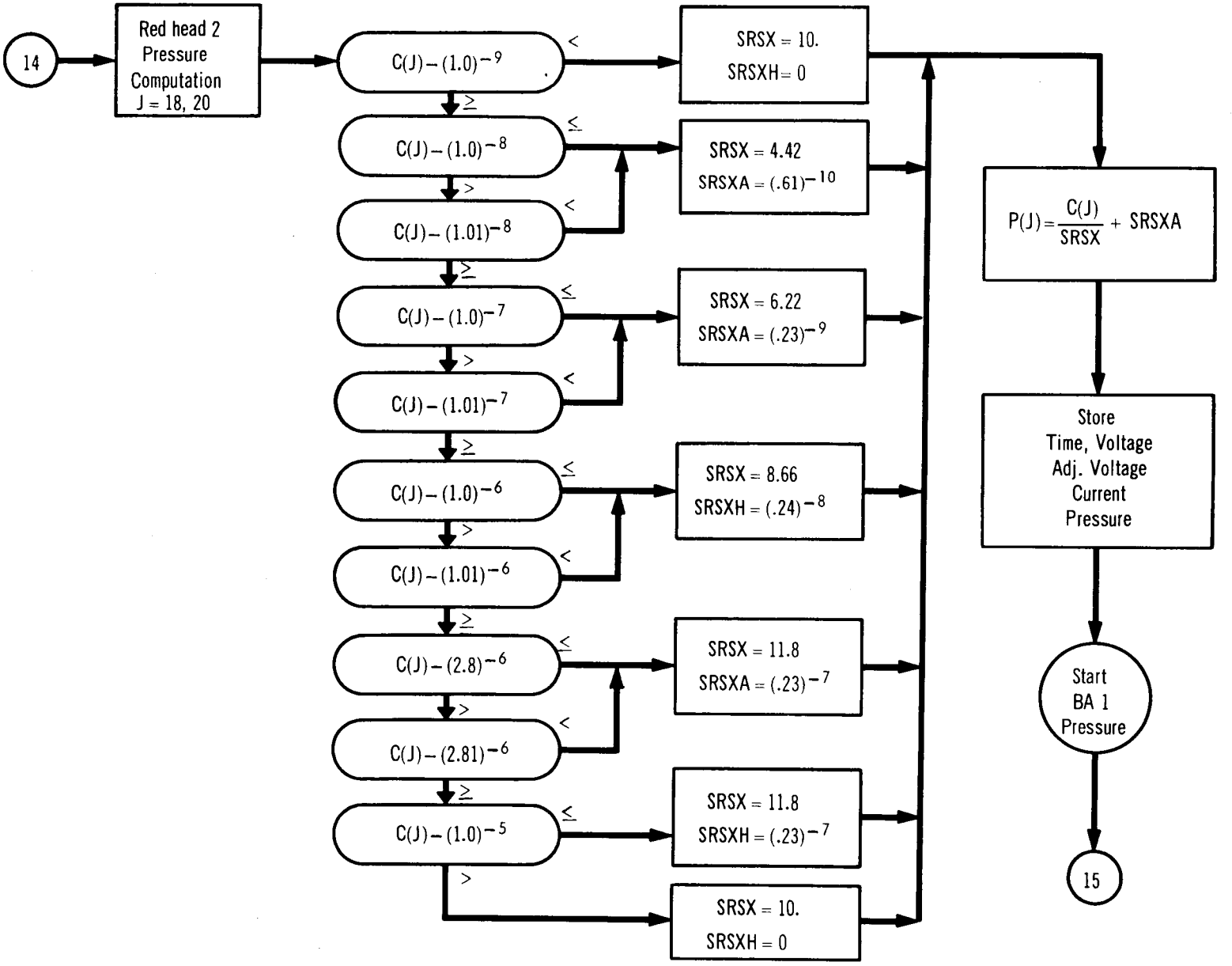
14
Red head 2
Pressure
Computation
J = 18, 20
C(J) – (1.0)^-9
C(J) – (1.0)^-8
C(J) – (1.01)^-8
C(J) – (1.0)^-7
C(J) – (1.01)^-7
C(J) – (1.0)^-6
C(J) – (1.01)^-6
C(J) – (2.8)^-6
C(J) – (2.81)^-6
C(J) – (1.0)^-5
SRSX = 10.
SRSXH = 0
SRSX = 4.42
SRSXA = (.61)^-10
SRSX = 6.22
SRSXA = (.23)^-9
SRSX = 8.66
SRSXH = (.24)^-8
SRSX = 11.8
SRSXA = (.23)^-7
SRSX = 11.8
SRSXH = (.23)^-7
SRSX = 10.
SRSXH = 0
P(J) = C(J)/SRSX + SRSXA
Store
Time, Voltage
Adj. Voltage
Current
Pressure
Start
BA 1
Pressure
15

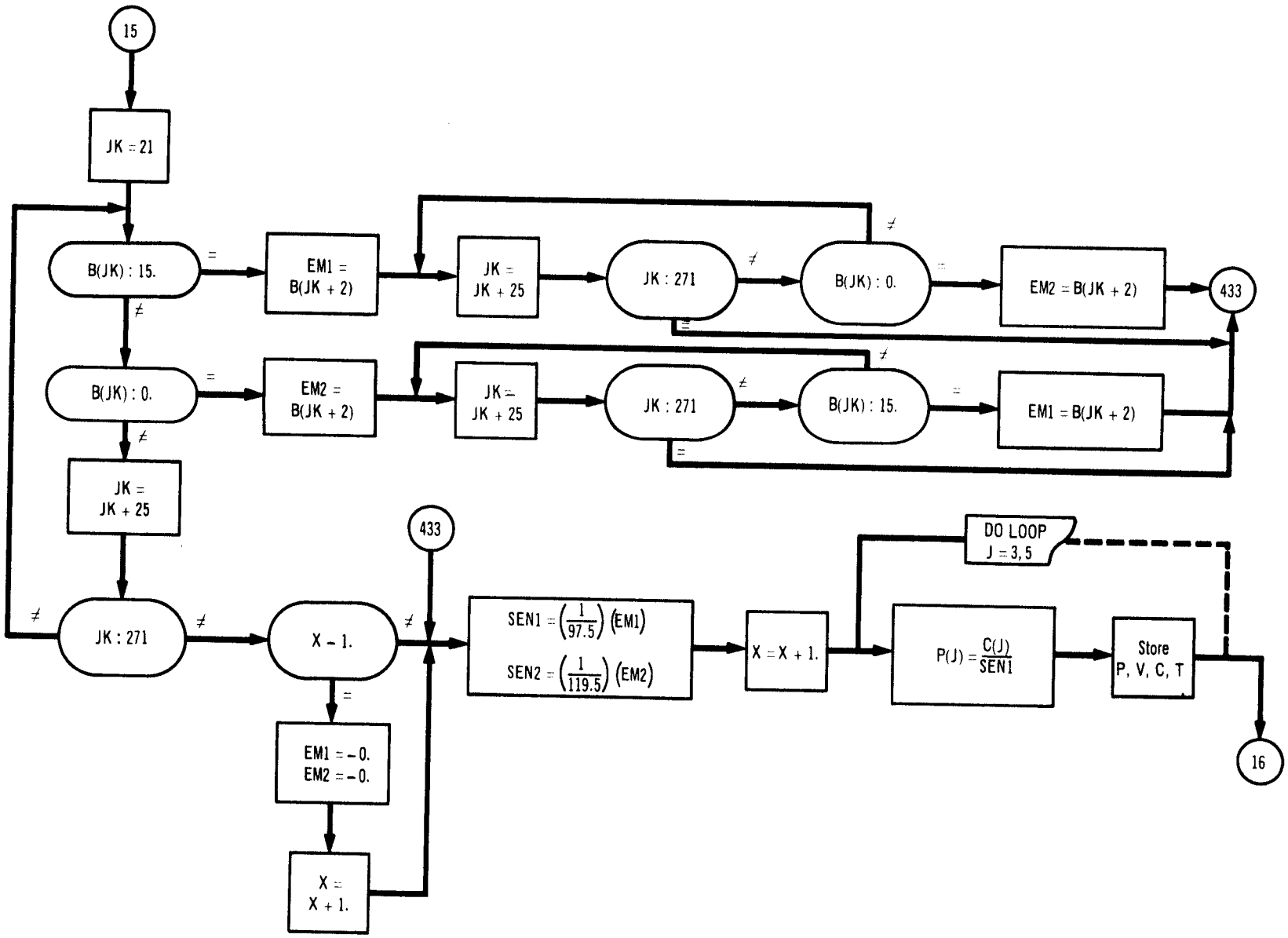
15
JK = 21
B(JK) : 15.
=
≠
EM1 = B(JK + 2)
JK = JK + 25
JK : 271
≠
=
B(JK) : 0.
≠
=
EM2 = B(JK + 2)
433
B(JK) : 0.
=
≠
EM2 = B(JK + 2)
JK = JK + 25
JK : 271
≠
=
B(JK) : 15.
≠
=
EM1 = B(JK + 2)
JK = JK + 25
433
≠
JK : 271
≠
X = 1.
≠
=
EM1 = -0.
EM2 = -0.
X = X + 1.
SEN1 = (1/97.5) (EM1)
SEN2 = (1/119.5) (EM2)
X = X + 1.
DO LOOP
J = 3, 5
P(J) = C(J)/SEN1
Store
P, V, C, T
16

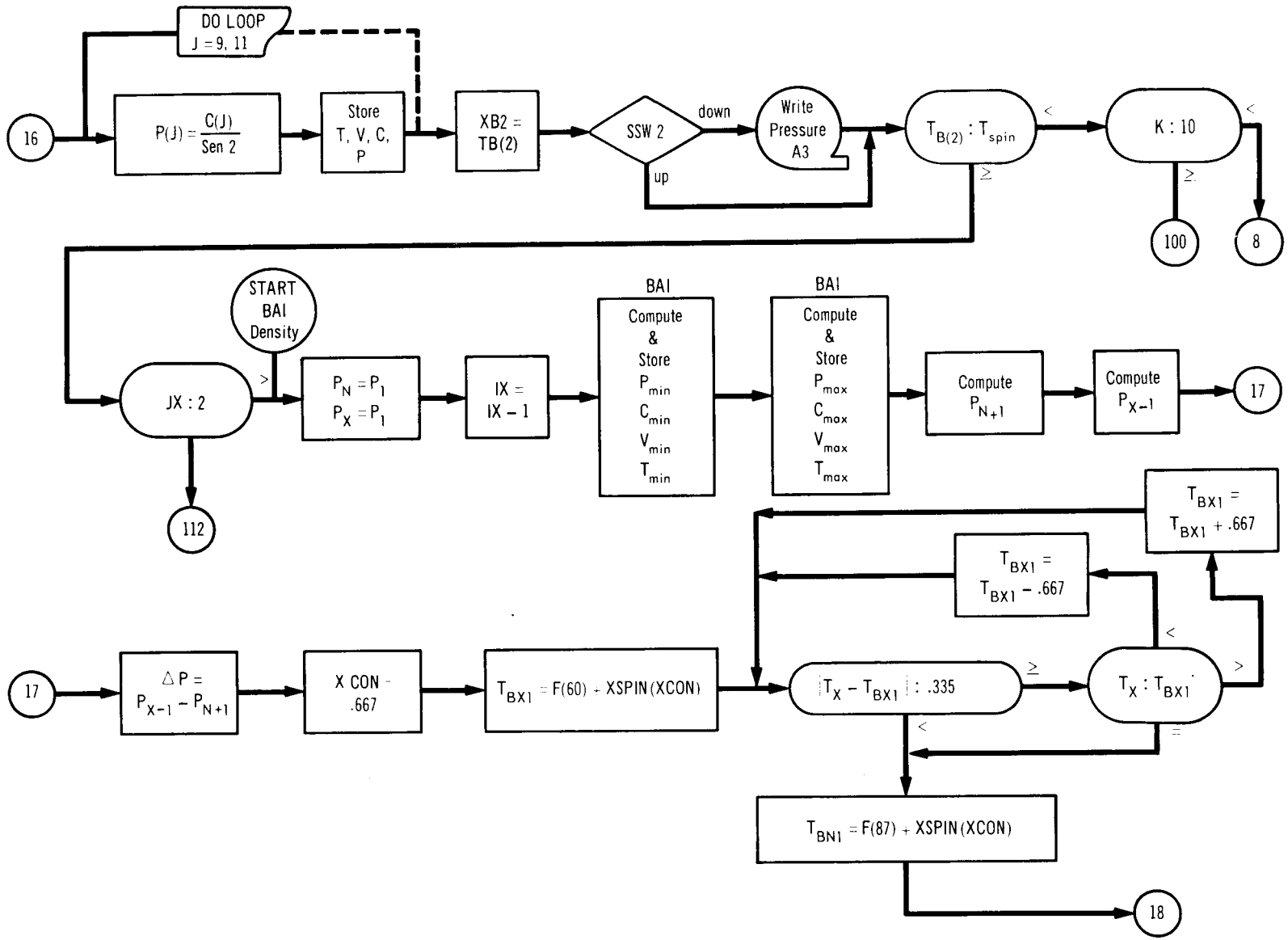
DO LOOP
J = 9, 11
16
P(J) = C(J) / Sen 2
Store T, V, C, P
XB2 = TB(2)
SSW 2
down
up
Write Pressure A3
$T_{B(2)} : T_{spin}$
<
≥
K : 10
<
≥
100
8
START BAI Density
JX : 2
>
112
$P_N = P_1$
$P_X = P_1$
IX = IX − 1
BAI
Compute & Store P_{min} C_{min} V_{min} T_{min}
BAI
Compute & Store P_{max} C_{max} V_{max} T_{max}
Compute P_{N+1}
Compute P_{X-1}
17
$T_{BX1} = T_{BX1} + .667$
$T_{BX1} = T_{BX1} - .667$
17
$\Delta P = P_{X-1} - P_{N+1}$
X CON = .667
$T_{BX1} = F(60) + XSPIN(XCON)$
$|T_X - T_{BX1}| : .335$
≥
<
$T_X : T_{BX1}$
<
>
=
$T_{BN1} = F(87) + XSPIN(XCON)$
18

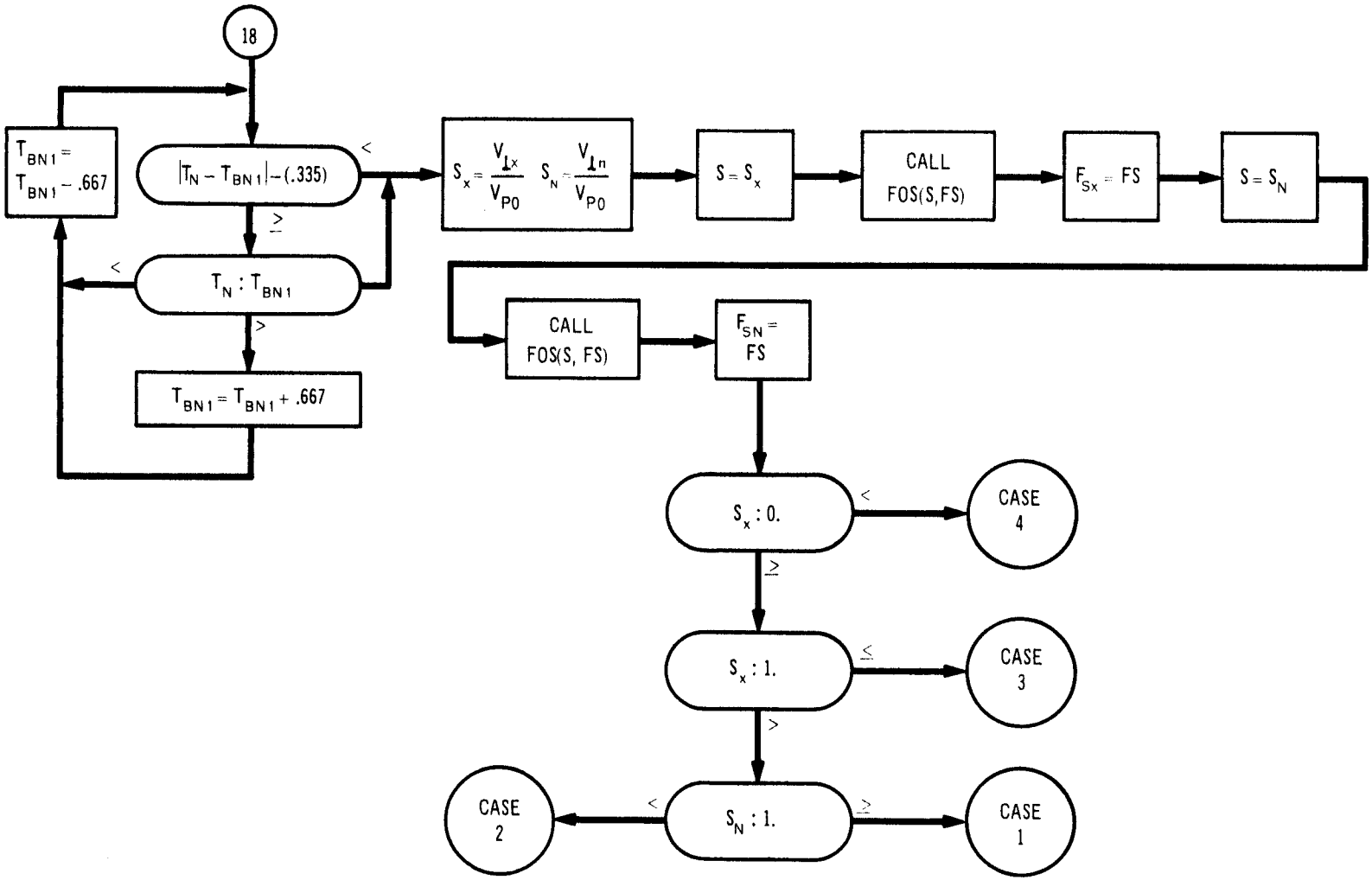
18
$T_{BN1} = T_{BN1} - .667$
$|T_N - T_{BN1}| - (.335)$
<
≥
$T_N : T_{BN1}$
<
>
$T_{BN1} = T_{BN1} + .667$
$S_x = \frac{V_{\perp x}}{V_{P0}}$ $S_N = \frac{V_{\perp n}}{V_{P0}}$
$S = S_x$
CALL FOS(S,FS)
$F_{Sx} = FS$
$S = S_N$
CALL FOS(S, FS)
$F_{SN} = FS$
$S_x : 0.$
<
CASE 4
≥
$S_x : 1.$
≤
CASE 3
>
$S_N : 1.$
<
CASE 2
≥
CASE 1

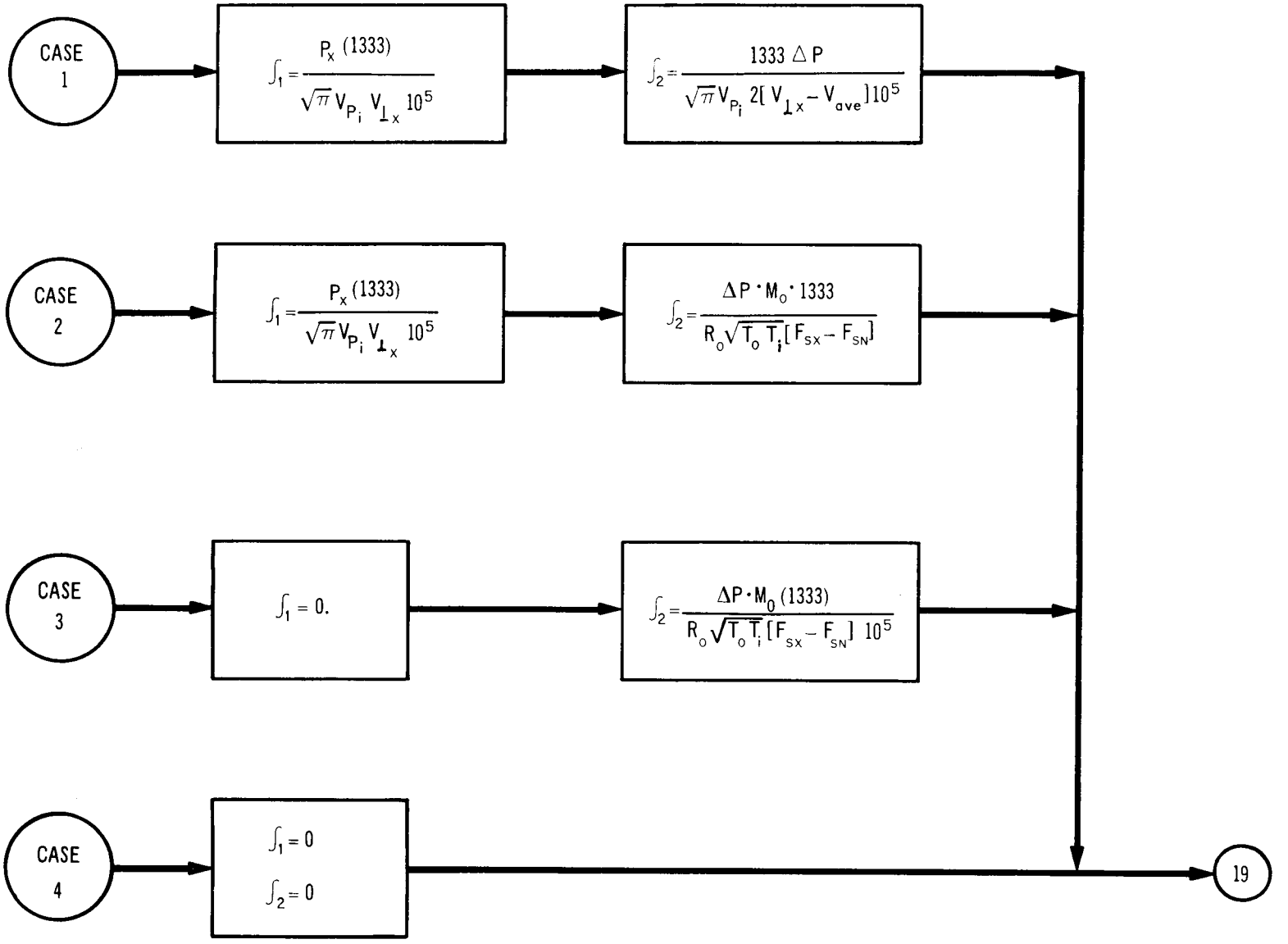
CASE 1
$\int_1 = \frac{P_x (1333)}{\sqrt{\pi} V_{P_i} V_{\perp x} 10^5}$
$\int_2 = \frac{1333 \Delta P}{\sqrt{\pi} V_{P_i} 2[V_{\perp x} - V_{ave}] 10^5}$
CASE 2
$\int_1 = \frac{P_x (1333)}{\sqrt{\pi} V_{P_i} V_{\perp x} 10^5}$
$\int_2 = \frac{\Delta P \cdot M_o \cdot 1333}{R_o \sqrt{T_o T_i} [F_{SX} - F_{SN}]}$
CASE 3
$\int_1 = 0.$
$\int_2 = \frac{\Delta P \cdot M_0 (1333)}{R_o \sqrt{T_o T_i} [F_{SX} - F_{SN}] 10^5}$
CASE 4
$\int_1 = 0$
$\int_2 = 0$
19

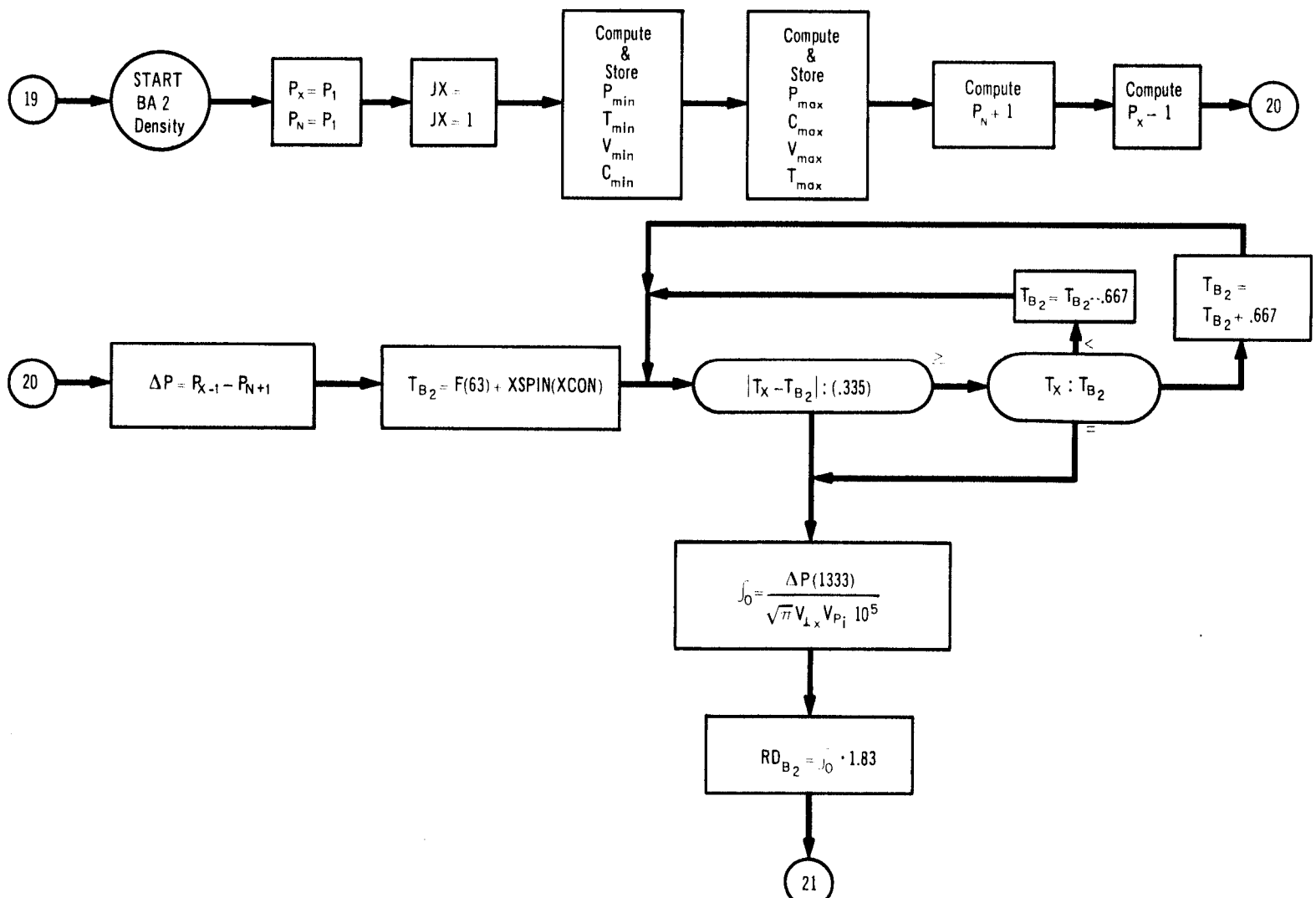
19
START BA 2 Density
$P_x = P_1$
$P_N = P_1$
JX =
JX = 1
Compute & Store P_{min} T_{min} V_{min} C_{min}
Compute & Store P_{max} C_{max} V_{max} T_{max}
Compute $P_N + 1$
Compute $P_x - 1$
20
20
$\Delta P = R_{X-1} - R_{N+1}$
$T_{B_2} = F(63) + XSPIN(XCON)$
$|T_X - T_{B_2}| : (.335)$
≥
<
=
$T_X : T_{B_2}$
$T_{B_2} = T_{B_2} - .667$
$T_{B_2} = T_{B_2} + .667$
$J_0 = \frac{\Delta P(1333)}{\sqrt{\pi} V_{\perp x} V_{P_i} 10^5}$
$RD_{B_2} = J_0 \cdot 1.83$
21

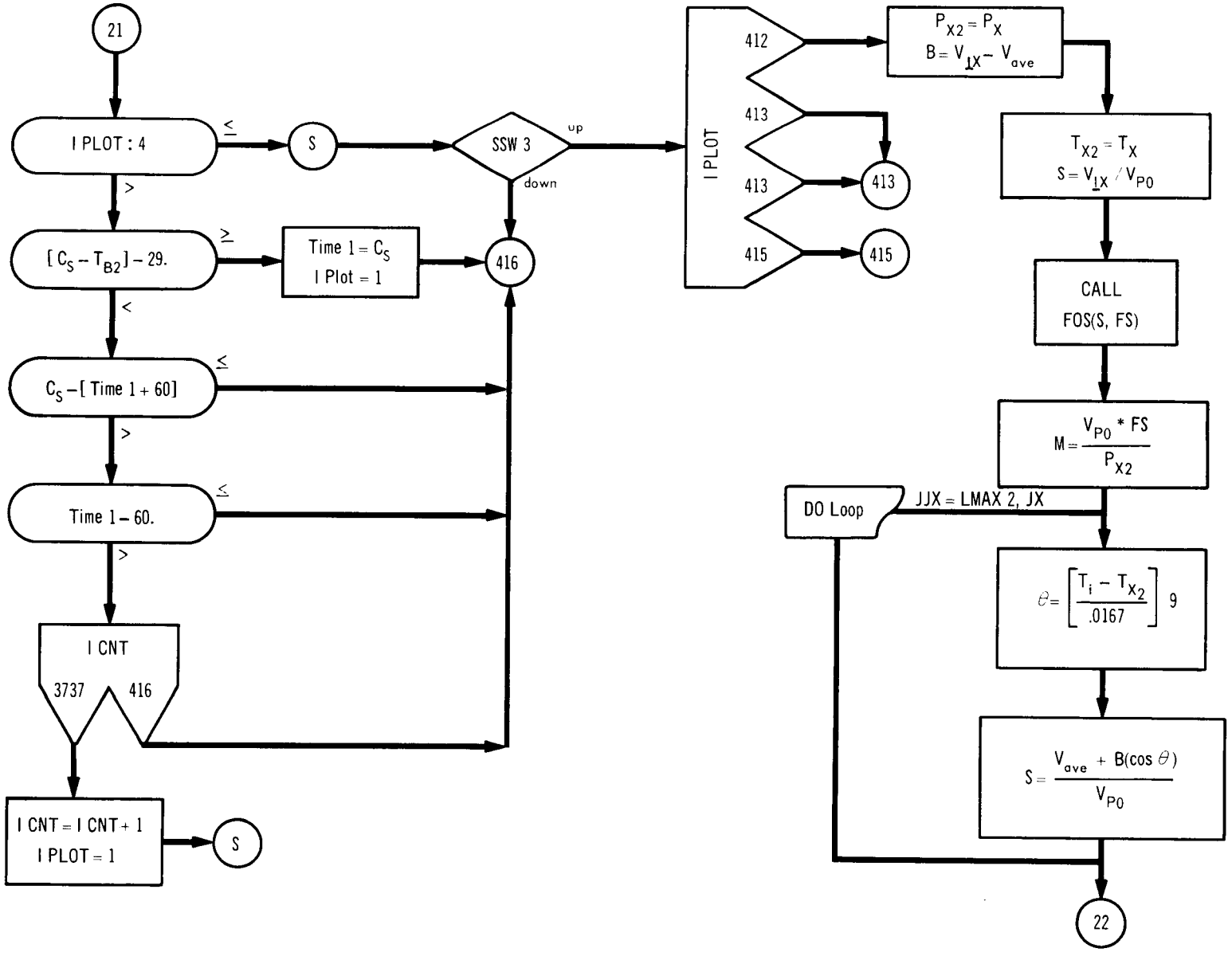
21
I PLOT : 4
≤
S
SSW 3
up
down
>
[$C_S - T_{B2}$] − 29.
≥
Time 1 = C_S
I Plot = 1
416
<
C_S − [Time 1 + 60]
≤
>
Time 1 − 60.
≤
>
I CNT
3737
416
I CNT = I CNT + 1
I PLOT = 1
S
I PLOT
412
413
413
415
413
415
$P_{X2} = P_X$
$B = V_{1X} - V_{ave}$
$T_{X2} = T_X$
$S = V_{1X} / V_{P0}$
CALL
FOS(S, FS)
$M = \frac{V_{P0} * FS}{P_{X2}}$
DO Loop
JJX = LMAX 2, JX
$\theta = \left[\frac{T_i - T_{X2}}{.0167}\right] 9$
$S = \frac{V_{ave} + B(\cos\theta)}{V_{P0}}$
22

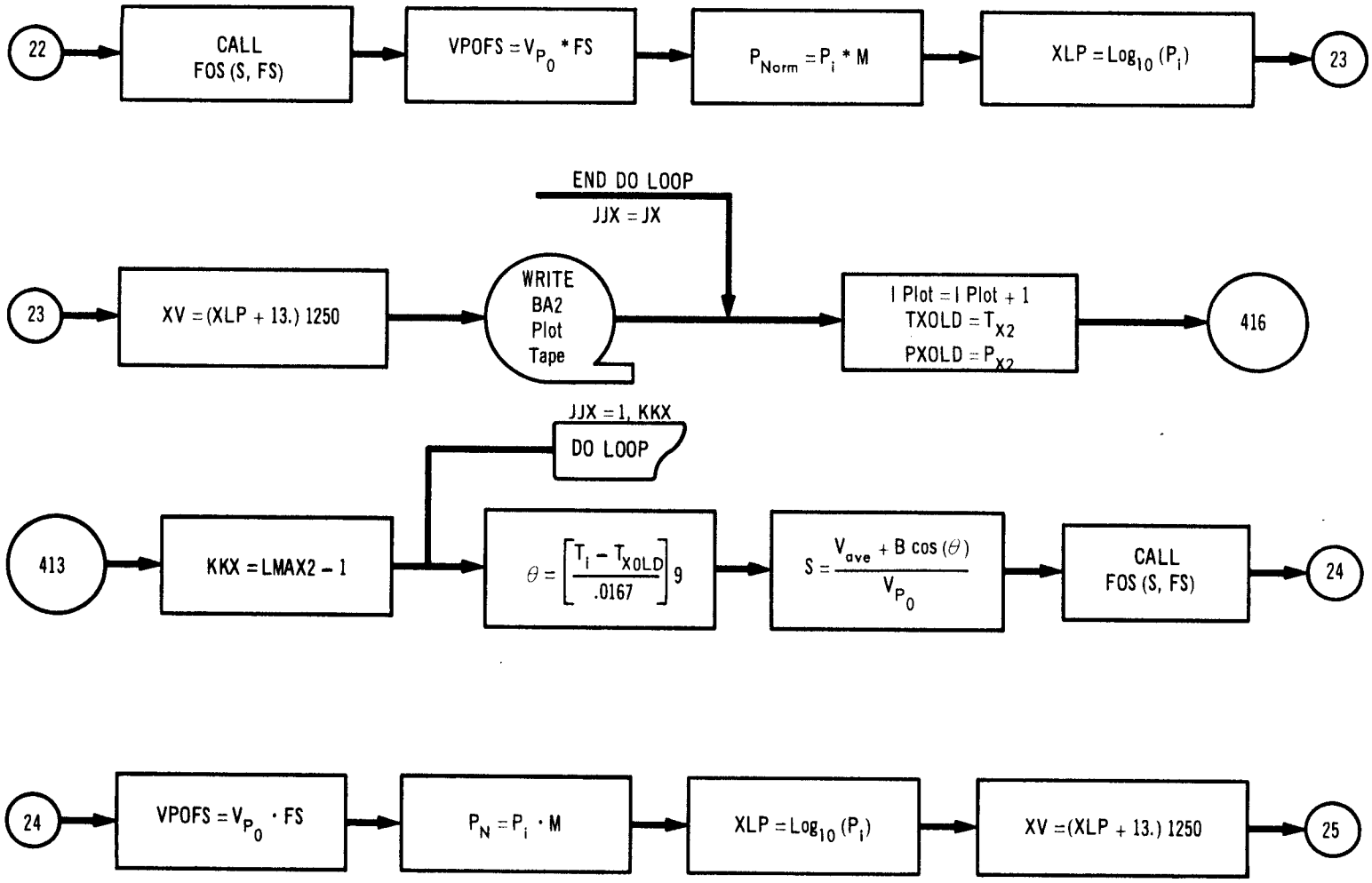
22
CALL FOS (S, FS)
VPOFS = V_{P_0} * FS
$P_{Norm} = P_i$ * M
XLP = Log_{10} (P_i)
23
END DO LOOP
JJX = JX
23
XV = (XLP + 13.) 1250
WRITE BA2 Plot Tape
I Plot = I Plot + 1
TXOLD = T_{X2}
PXOLD = P_{X2}
416
JJX = 1, KKX
DO LOOP
413
KKX = LMAX2 − 1
$\theta = \left[\frac{T_i - T_{XOLD}}{.0167}\right] 9$
$S = \frac{V_{ave} + B \cos(\theta)}{V_{P_0}}$
CALL FOS (S, FS)
24
24
VPOFS = V_{P_0} · FS
$P_N = P_i$ · M
XLP = Log_{10} (P_i)
XV = (XLP + 13.) 1250
25

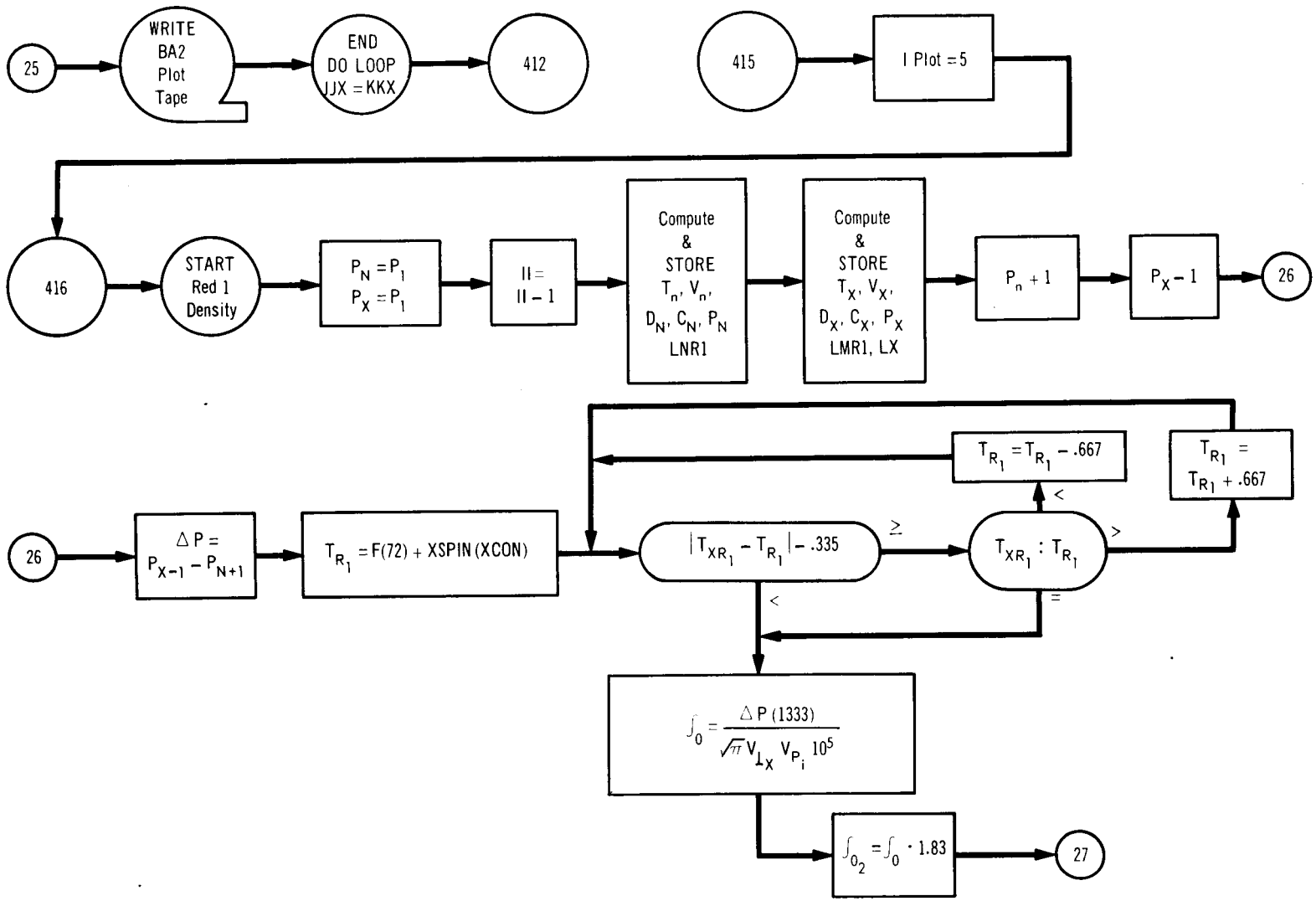
25
WRITE BA2 Plot Tape
END DO LOOP JJX = KKX
412
415
I Plot = 5
416
START Red 1 Density
$P_N = P_1$
$P_X = P_1$
II = II − 1
Compute & STORE T_n, V_n, D_N, C_N, P_N LNR1
Compute & STORE T_X, V_X, D_X, C_X, P_X LMR1, LX
$P_n + 1$
$P_X - 1$
26
26
$\Delta P = P_{X-1} - P_{N+1}$
$T_{R_1} = F(72) + XSPIN(XCON)$
$|T_{XR_1} - T_{R_1}| - .335$
≥
<
$T_{XR_1} : T_{R_1}$
<
=
>
$T_{R_1} = T_{R_1} - .667$
$T_{R_1} = T_{R_1} + .667$
$\int_0 = \frac{\Delta P (1333)}{\sqrt{\pi} V_{\perp X} V_{P_i} 10^5}$
$\int_{0_2} = \int_0 \cdot 1.83$
27

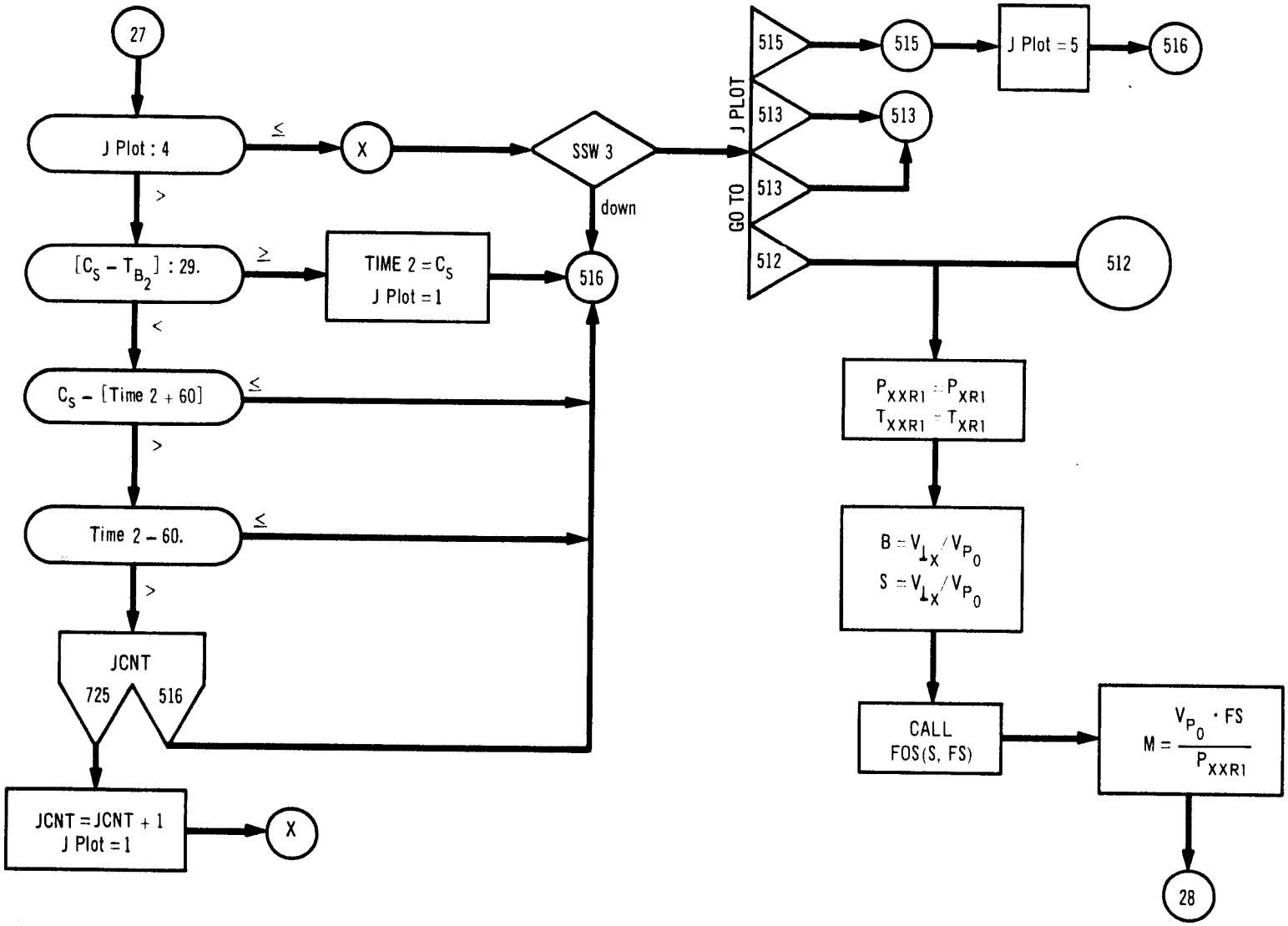
27
J Plot : 4
≤
X
SSW 3
down
>
[C_S − T_{B_2}] : 29.
≥
TIME 2 = C_S
J Plot = 1
516
<
C_S − [Time 2 + 60]
≤
>
Time 2 − 60.
≤
>
JCNT
725
516
JCNT = JCNT + 1
J Plot = 1
X
GO TO
J PLOT
515
513
513
512
515
513
512
J Plot = 5
516
P_{XXR1} = P_{XR1}
T_{XXR1} = T_{XR1}
B = $V_{\perp X}$ / V_{P_0}
S = $V_{\perp X}$ / V_{P_0}
CALL
FOS(S, FS)
M = $\frac{V_{P_0} \cdot FS}{P_{XXR1}}$
28

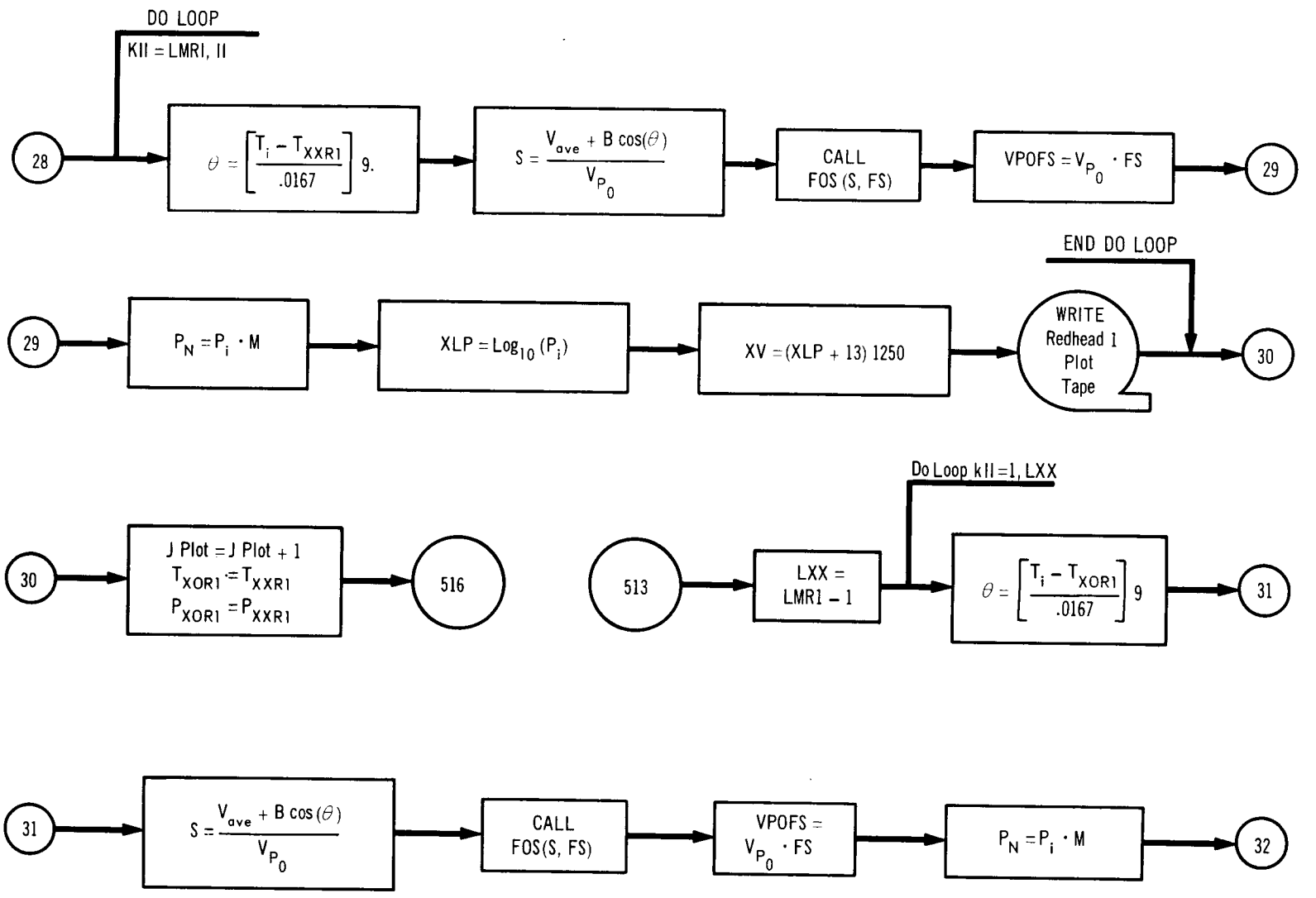
DO LOOP
KII = LMRI, II
28
$\theta = \left[\frac{T_i - T_{XXR1}}{.0167}\right] 9.$
$S = \frac{V_{ave} + B\cos(\theta)}{V_{P_0}}$
CALL FOS (S, FS)
$VPOFS = V_{P_0} \cdot FS$
29
END DO LOOP
29
$P_N = P_i \cdot M$
$XLP = Log_{10}(P_i)$
$XV = (XLP + 13)\ 1250$
WRITE Redhead 1 Plot Tape
30
30
J Plot = J Plot + 1
$T_{XOR1} = T_{XXR1}$
$P_{XOR1} = P_{XXR1}$
516
513
LXX = LMR1 − 1
Do Loop kII = 1, LXX
$\theta = \left[\frac{T_i - T_{XOR1}}{.0167}\right] 9$
31
31
$S = \frac{V_{ave} + B\cos(\theta)}{V_{P_0}}$
CALL FOS(S, FS)
$VPOFS = V_{P_0} \cdot FS$
$P_N = P_i \cdot M$
32

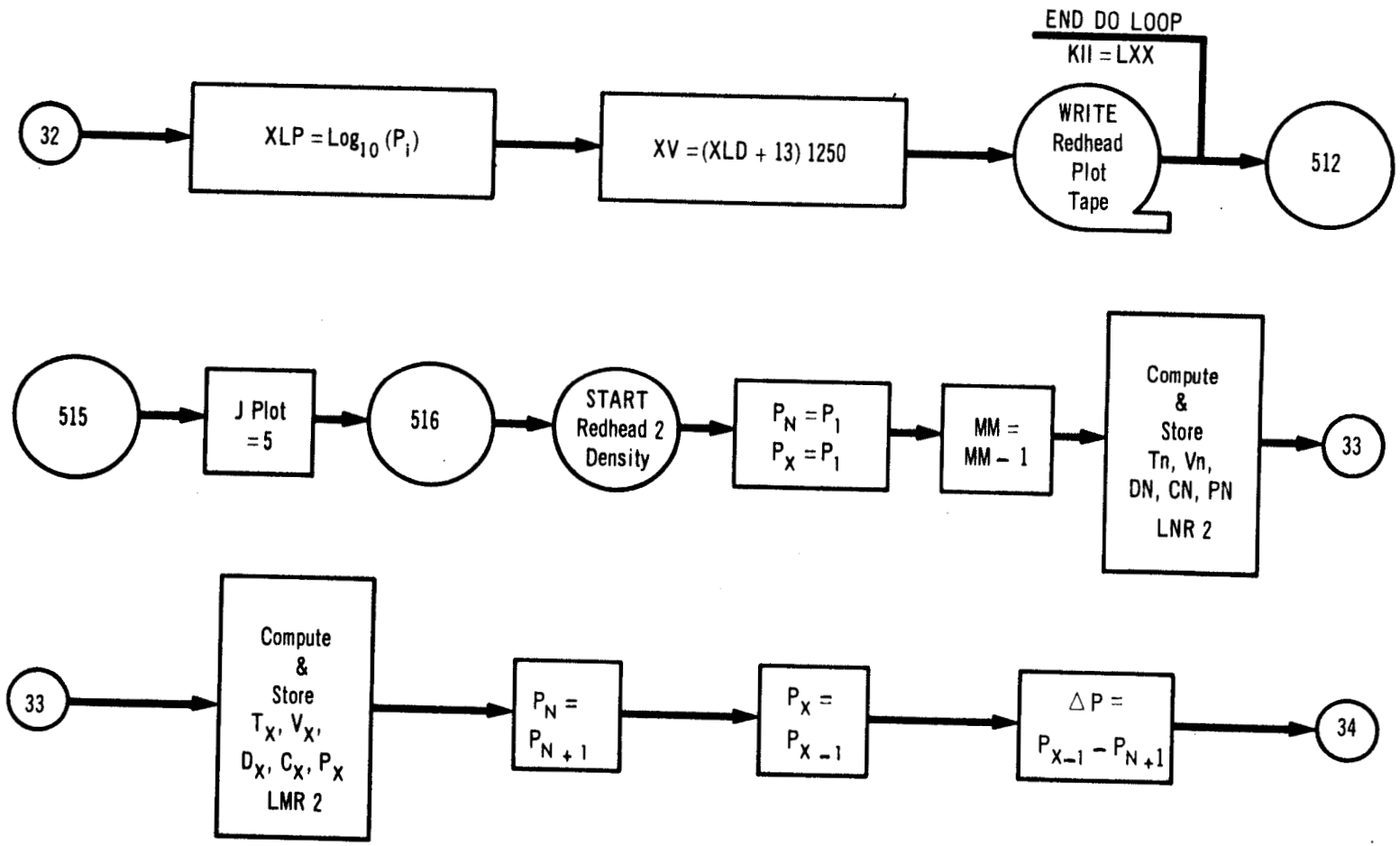
32
XLP = Log10 (Pi)
XV = (XLD + 13) 1250
END DO LOOP
KII = LXX
WRITE
Redhead
Plot
Tape
512
515
J Plot
= 5
516
START
Redhead 2
Density
PN = P1
PX = P1
MM =
MM – 1
Compute
&
Store
Tn, Vn,
DN, CN, PN
LNR 2
33
33
Compute
&
Store
TX, VX,
DX, CX, PX
LMR 2
PN =
PN + 1
PX =
PX – 1
ΔP =
PX–1 – PN+1
34

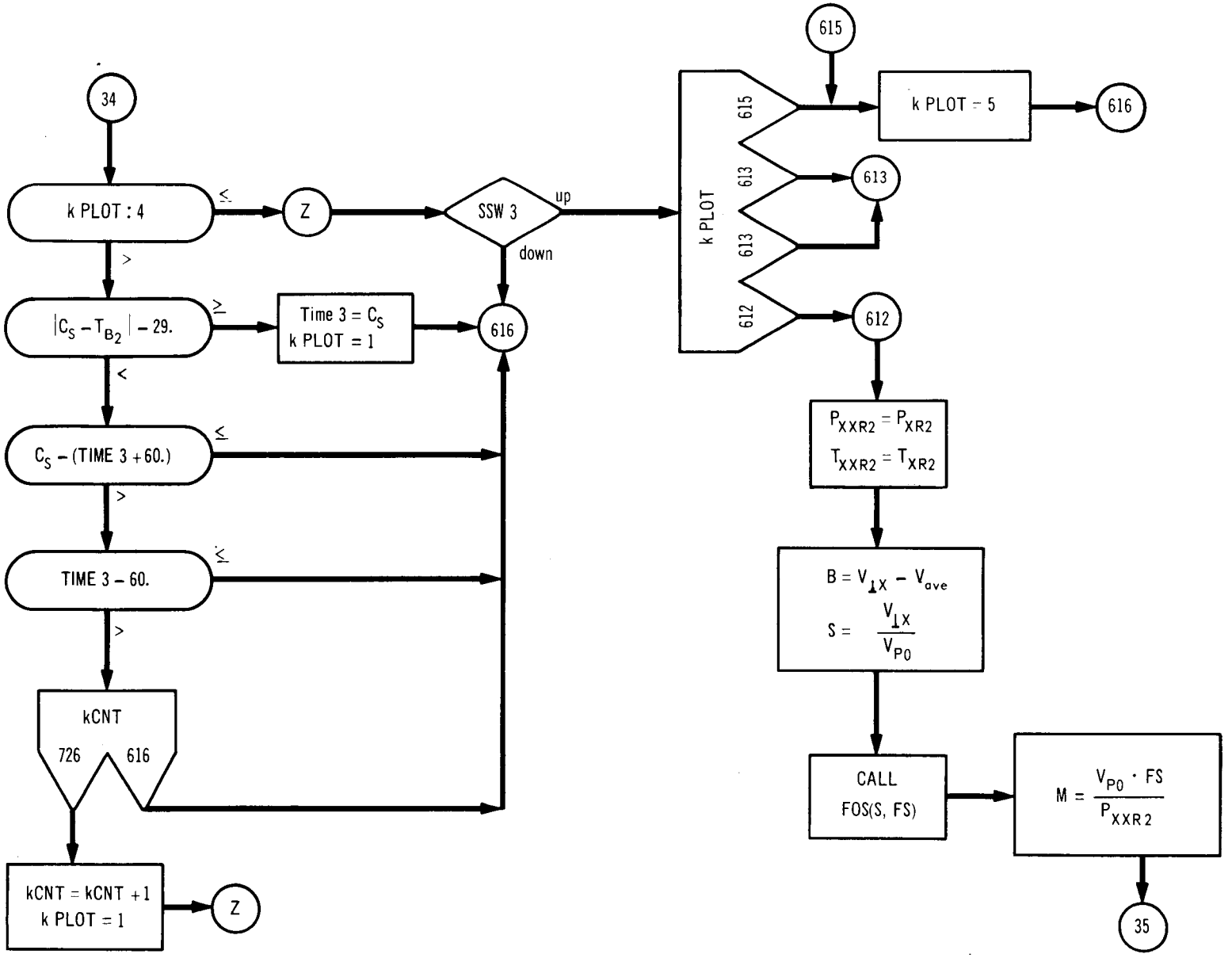
34
k PLOT : 4
≤
Z
SSW 3
up
down
>
|C_S − T_B2| − 29.
≥
Time 3 = C_S
k PLOT = 1
616
<
C_S − (TIME 3 + 60.)
≤
>
TIME 3 − 60.
≤
>
kCNT
726
616
kCNT = kCNT + 1
k PLOT = 1
Z
k PLOT
615
613
613
612
615
k PLOT = 5
616
613
612
P_XXR2 = P_XR2
T_XXR2 = T_XR2
B = V_⊥X − V_ave
S = V_⊥X / V_P0
CALL
FOS(S, FS)
M = V_P0 · FS / P_XXR2
35

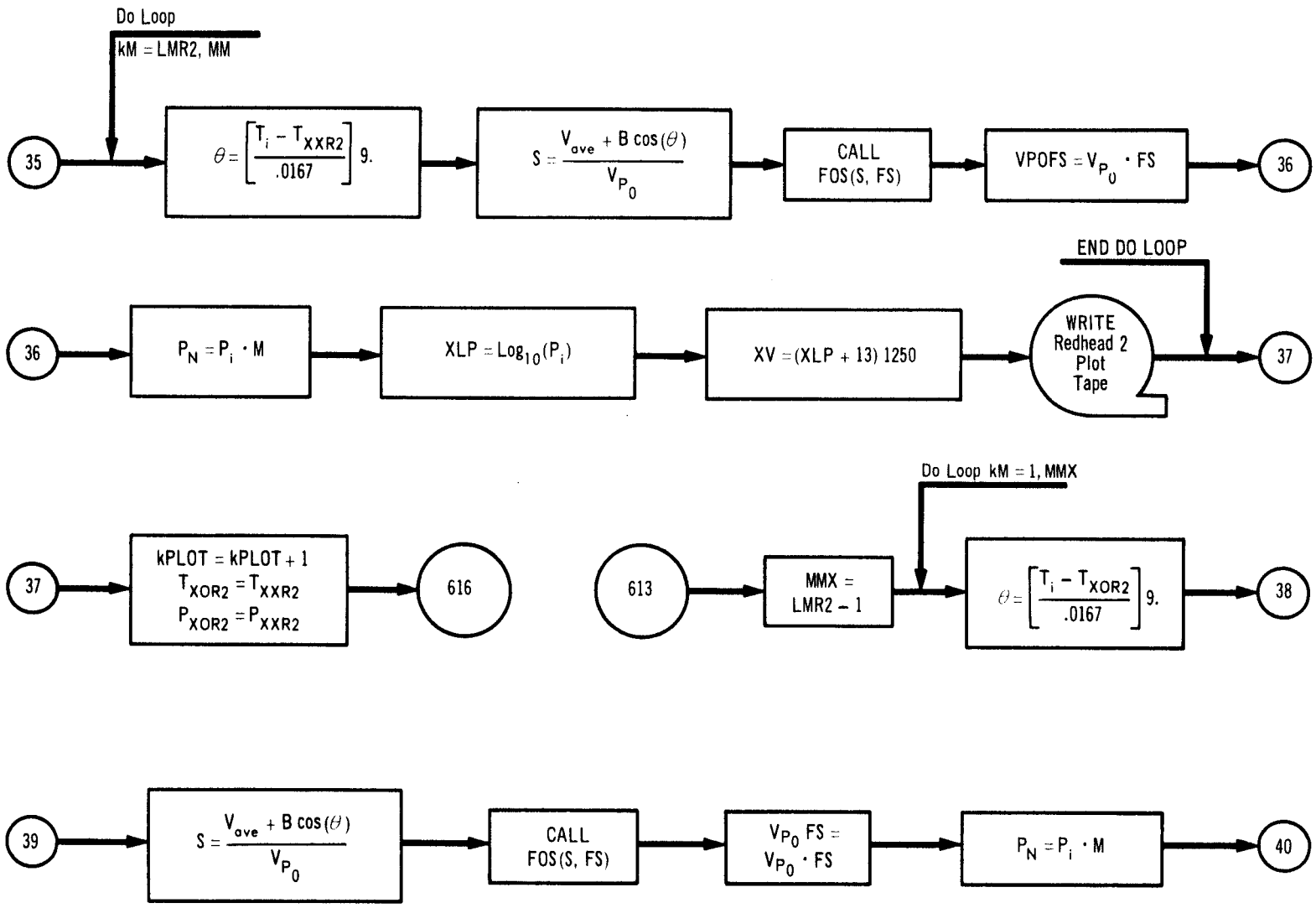
Do Loop
kM = LMR2, MM
35
$\theta = \left[\frac{T_i - T_{XXR2}}{.0167}\right] 9.$
$S = \frac{V_{ave} + B\cos(\theta)}{V_{P_0}}$
CALL FOS(S, FS)
$VPOFS = V_{P_0} \cdot FS$
36
END DO LOOP
36
$P_N = P_i \cdot M$
$XLP = Log_{10}(P_i)$
$XV = (XLP + 13)\ 1250$
WRITE Redhead 2 Plot Tape
37
Do Loop kM = 1, MMX
37
kPLOT = kPLOT + 1
$T_{XOR2} = T_{XXR2}$
$P_{XOR2} = P_{XXR2}$
616
613
MMX = LMR2 − 1
$\theta = \left[\frac{T_i - T_{XOR2}}{.0167}\right] 9.$
38
39
$S = \frac{V_{ave} + B\cos(\theta)}{V_{P_0}}$
CALL FOS(S, FS)
$V_{P_0}\ FS = V_{P_0} \cdot FS$
$P_N = P_i \cdot M$
40

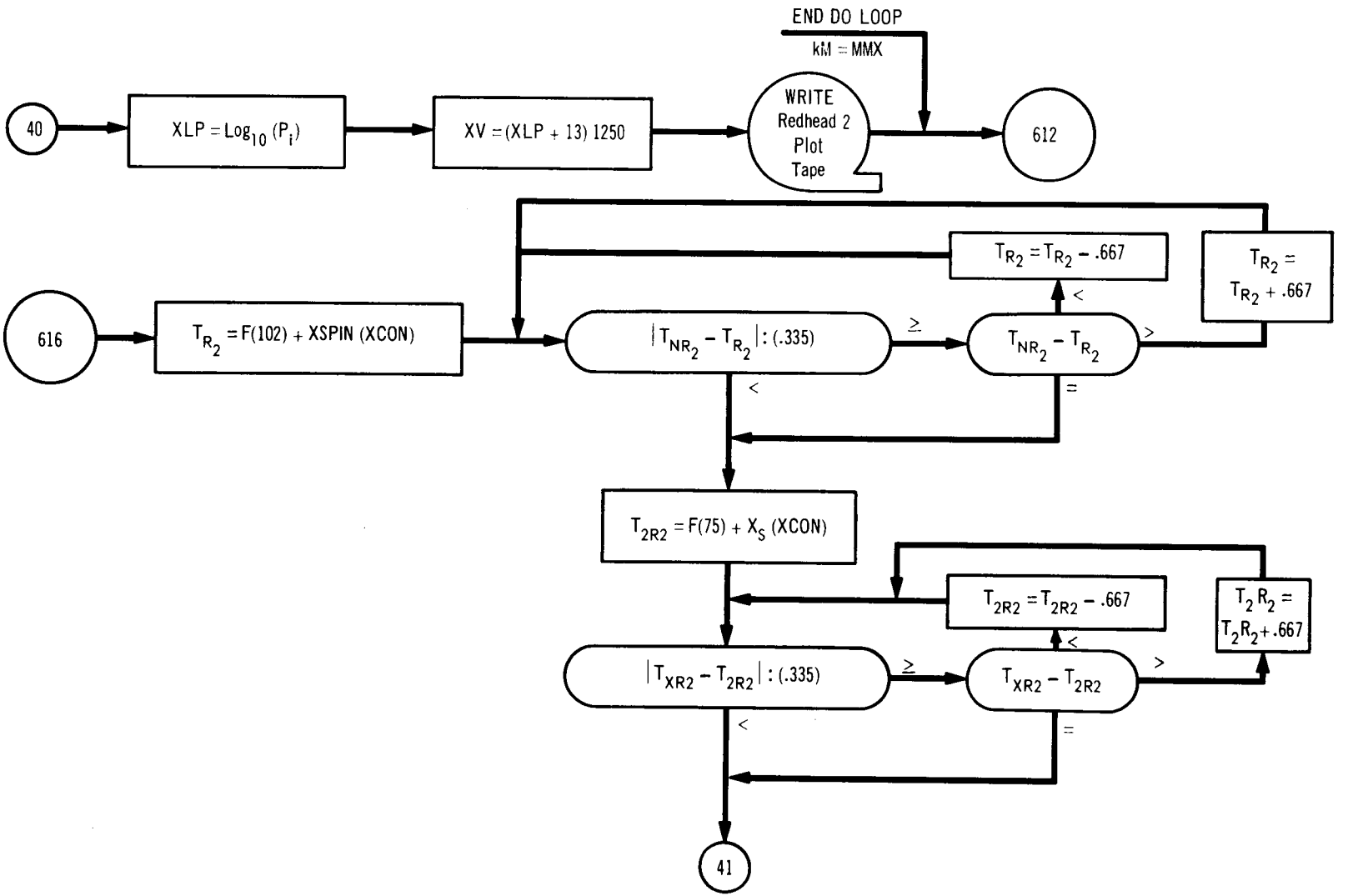
END DO LOOP
kM = MMX
40
XLP = Log10 (Pi)
XV = (XLP + 13) 1250
WRITE
Redhead 2
Plot
Tape
612
616
TR2 = F(102) + XSPIN (XCON)
|TNR2 − TR2| : (.335)
≥
<
TNR2 − TR2
>
=
TR2 = TR2 − .667
TR2 =
TR2 + .667
T2R2 = F(75) + XS (XCON)
|TXR2 − T2R2| : (.335)
≥
<
TXR2 − T2R2
>
=
T2R2 = T2R2 − .667
T2R2 =
T2R2 + .667
41

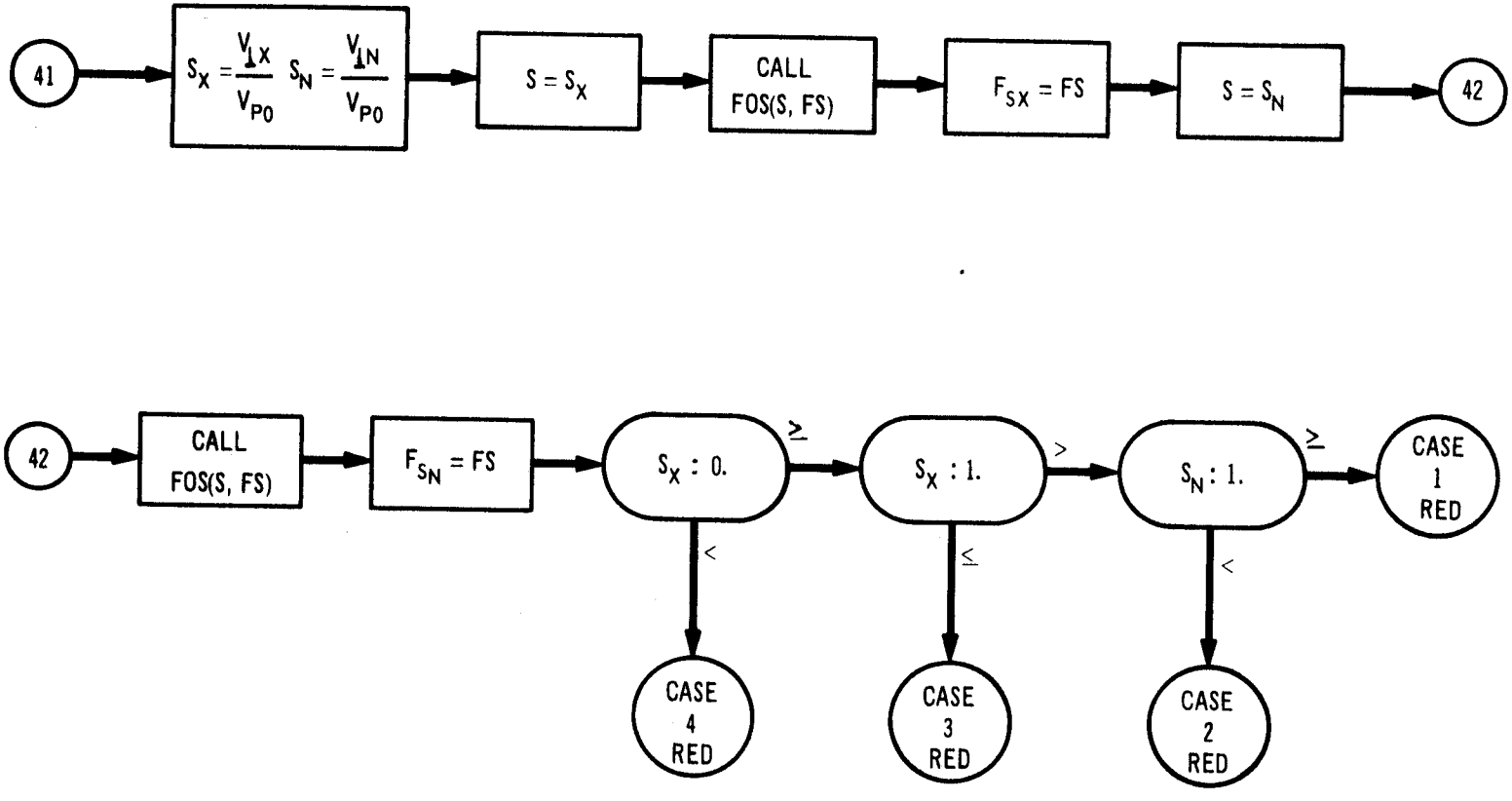
41
$S_X = \frac{V_{\perp X}}{V_{PO}}$ $S_N = \frac{V_{\perp N}}{V_{PO}}$
$S = S_X$
CALL FOS(S, FS)
$F_{SX} = FS$
$S = S_N$
42
42
CALL FOS(S, FS)
$F_{SN} = FS$
$S_X : 0.$
$S_X : 1.$
$S_N : 1.$
≥
>
≥
<
≤
<
CASE 1 RED
CASE 4 RED
CASE 3 RED
CASE 2 RED

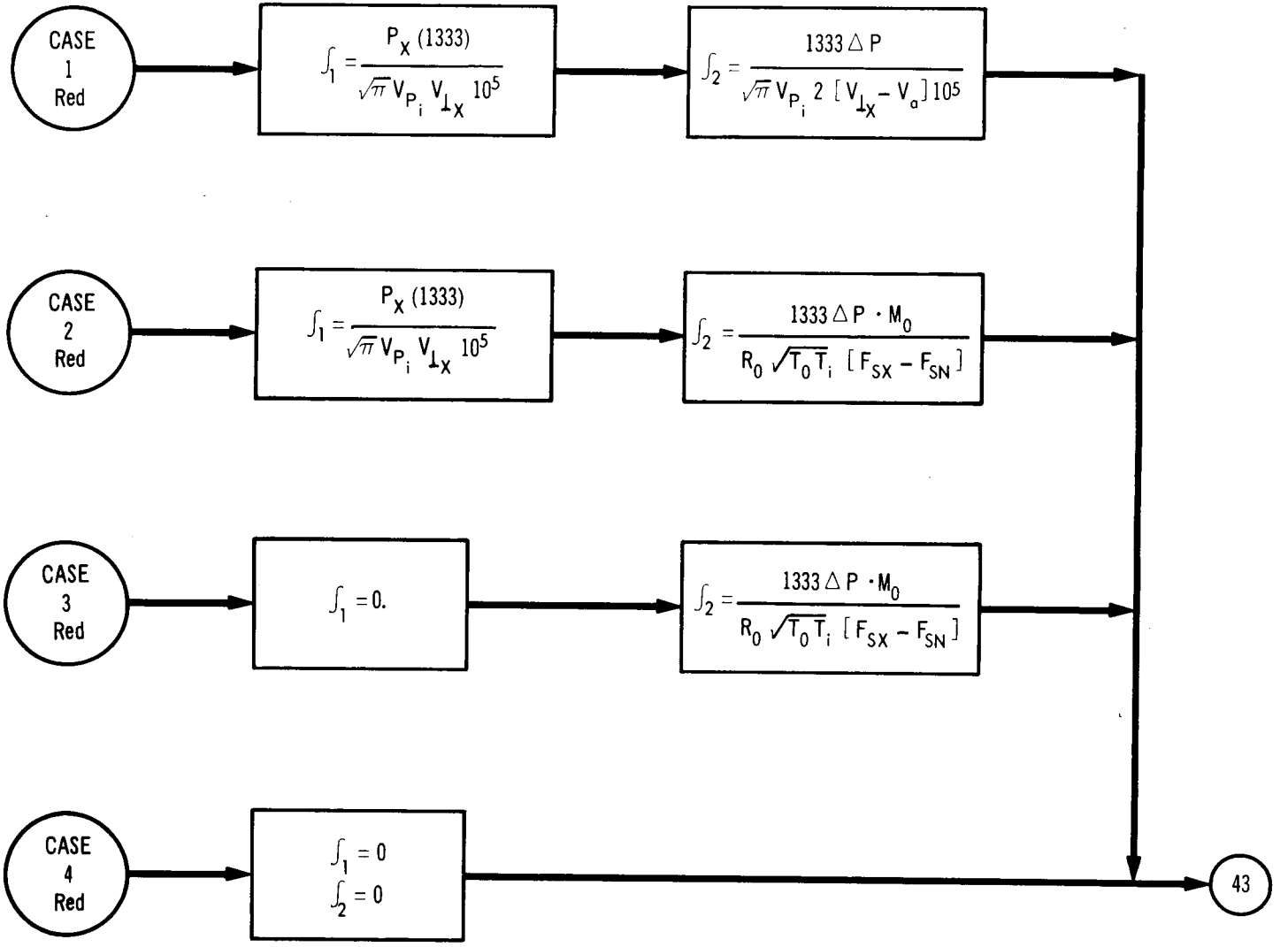
CASE 1 Red
$\int_1 = \frac{P_X (1333)}{\sqrt{\pi} V_{P_i} V_{\perp X} 10^5}$
$\int_2 = \frac{1333 \Delta P}{\sqrt{\pi} V_{P_i} 2 [V_{\perp X} - V_a] 10^5}$
CASE 2 Red
$\int_1 = \frac{P_X (1333)}{\sqrt{\pi} V_{P_i} V_{\perp X} 10^5}$
$\int_2 = \frac{1333 \Delta P \cdot M_0}{R_0 \sqrt{T_0 T_i} [F_{SX} - F_{SN}]}$
CASE 3 Red
$\int_1 = 0.$
$\int_2 = \frac{1333 \Delta P \cdot M_0}{R_0 \sqrt{T_0 T_i} [F_{SX} - F_{SN}]}$
CASE 4 Red
$\int_1 = 0$
$\int_2 = 0$
43

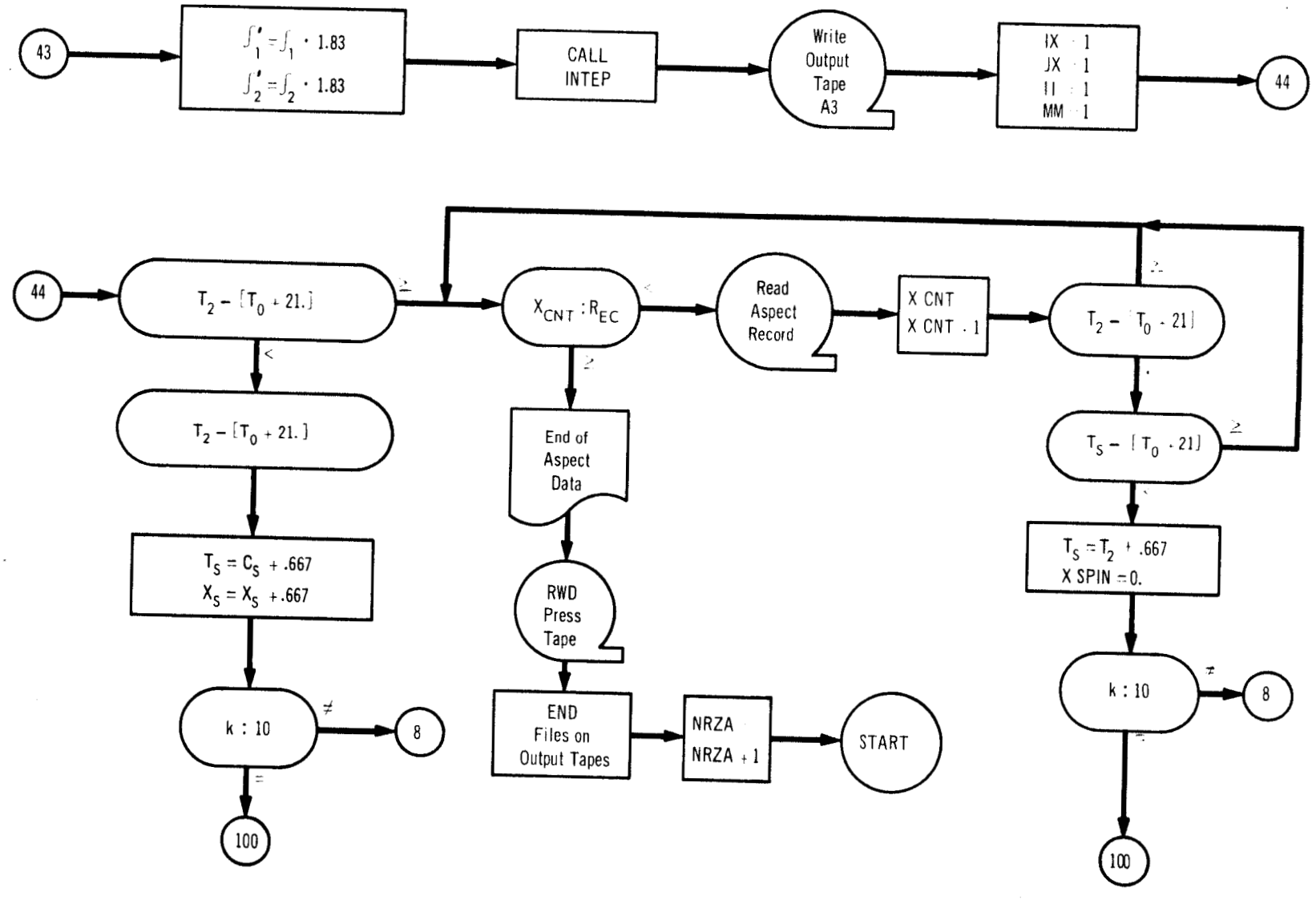
43
$\int_1' = \int_1 \cdot 1.83$
$\int_2' = \int_2 \cdot 1.83$
CALL INTEP
Write Output Tape A3
IX = 1
JX = 1
II = 1
MM = 1
44
44
$T_2 = [T_0 + 21.]$
$T_2 = [T_0 + 21.]$
$T_S = C_S + .667$
$X_S = X_S + .667$
k : 10
8
100
$X_{CNT} : R_{EC}$
End of Aspect Data
RWD Press Tape
END Files on Output Tapes
NRZA
NRZA + 1
START
Read Aspect Record
X CNT
X CNT + 1
$T_2 = [T_0 + 21]$
$T_S = [T_0 + 21]$
$T_S = T_2 + .667$
X SPIN = 0.
k : 10
8
100

November 1963

Program Write Up

0. Programmer—A. O. Forehand

1. Program Name—SUBROUTINE FOS

2. Programming System—FORTRAN II

3. General Description—

This subroutine computes the value of the Thermal Transpiration Function, defined by:

$$F(s) = e^{-s^2} + s\sqrt{\pi}\ (1 + \mathrm{erf}(s))$$

where s is the given independent variable and erf is the error function.

4. Calling Sequence—

CALL FOS (S, FS) where S is the independent variable taken as input to the routine and FS is the value of the function, F(S).

5. Mathematical Description of the Computation

(1) Definitions and relations

$$^{*}F(s) = e^{-s^2} + s\sqrt{\pi}\ (1 + \mathrm{erf}(s))$$

where

$$\mathrm{erf}(s) = \frac{2}{\sqrt{\pi}} \int_0^s e^{-x^2}\, dx.$$

Substituting this value for erf(s) in * yields

$$F(s) = e^{-s^2} + s\sqrt{\pi} + 2s \int_0^s e^{-x^2}\, dx$$

Since the integral in the above expression is an odd function we see that

$$F(-s) = e^{-s^2} - s\sqrt{\pi} + 2s \int_0^s e^{-x^2}\, dx$$

or

$$^{**}F(-s) = F(s) - 2s\sqrt{\pi}$$

Since for large positive values of s, e^{-s^2} is small and erf(s) is nearly equal to 1, then $2s\sqrt{\pi}$ is a good approximation to F(s) in this case.

Since by $^{**}F(s) = 2s\sqrt{\pi} + F(-s)$ we see that the error in this approximation is exactly equal to $F(-s)$.

(2) Evaluation of $\int_0^s e^{-x^2}\, dx$

Expanding e^{-x^2} in a Taylor's series and integrating termwise yields

$$s - \frac{s^3}{3.1!} + \frac{s^5}{5.2!} - \frac{s^7}{7.3!} + \cdots$$

This series converges for all values of s but the number of terms required for accuracy becomes excessive as $|s|$ increases.

This difficulty is overcome by using this series only for $|s| \leq 2.5$ and using an asymptotic series for $|s| > 2.5$.

(a) The asymptotic series T

(1) Define n = (largest integer $\leq s^2$)

(2) Define $t = 2s^2$

Then the asymptotic series T is defined by

$$T = \frac{1}{t} - \frac{1.3}{t^2} + \frac{1.3.5}{t^3} - \cdots + (-1)^{n+1} \frac{1.3.5 \cdots (2n-1)}{t^n}$$

(b) Expression of the integral in terms of T

Case I. $s > 2.5$

$$\int_0^s e^{-x^2}\,dx = \frac{\sqrt{\pi}}{2} - \frac{e^{-s^2}}{2s}\,(1 - T)$$

Substituting this expression back into the equation for $F(s)$ gives

$$F(s) = e^{-s^2} + s\sqrt{\pi} + 2s\left[\frac{\sqrt{\pi}}{2} - \frac{e^{-s^2}}{2s}\,(1 - T)\right]$$

$$= 2s\sqrt{\pi} + e^{-s^2}\,T$$

Case II. $s < -2.5$

$$\int_0^s e^{-x^2}\,dx = -\frac{\sqrt{\pi}}{2} - \frac{e^{-s^2}}{2s}\,(1 - T)$$

This expression substituted into the $F(s)$ equation yields:

$$F(s) = e^{-s^2} + s\sqrt{\pi} + 2s\left[-\frac{\sqrt{\pi}}{2} - \frac{e^{-s^2}}{2s}\,(1 - T)\right]$$

$$= e^{-s^2}\,T$$

6. References

For a complete discussion of the integral involved here and the derivation of the asymptotic series see Numerical Math. Analysis by J. B. Scarborough. (Pages 406-409 of the 4th edition.)

March 1965

Program Writeup

0. Programmer—C. Hanley

1. Program Name—SUBROUTINE MATCH

2. Programming System—FORTRAN II

3. General Description—

Subroutine Match reads the identification record of the experiment data tape and the aspect tape and proceeds to compare the appropriate aspect data with the experimental data tape for each satellite pass of data. The station number, month, day, hours, and minutes are the ID parameters to be matched. All parameters are to be matched otherwise processing of the data is deleted and an appropriate message is printed out.

The subroutine (Match) is called into operation by the following program statement:

```
CALL MATCH (NEDI, N)
```

where NEDI is the satellite pass number;

N = output parameter which tells if match has occurred

N = 0 Match has occurred

N = 1 Match has not occurred

March 1965

Program Writeup

0. Programmer—C. Hanley

1. Program Name—SUBROUTINE INTEP

2. Programming System—FORTRAN II

3. General Description—

Subroutine INTEP is a routine used for interpolating the altitude, latitude, longitude and local sun time parameters on the aspect tape. The above parameters are given once every 22 sec. and it is required to have the above parameter values every spin period (.667 sec.).

The subroutine (INTEP) is called into operation by the following FORTRAN II program statement:

CALL INTEP (TS, NREC, YALT, YLAT, YLONG, YLST)

INPUT PARAMETERS	TS*	=	time
	NREC	=	number of records
OUTPUT PARAMETERS	YALT	=	altitude
	YLAT	=	latitude
	YLONG	=	longitude
	YLST	=	local sun time

March 1965

Program Writeup

0. Programmer—A. O. Forehand

1. Program Name—SUBROUTINE GTMC

2. Programming System—FORTRAN II

3. General Description—

This FORTRAN II subroutine converts geographic coordinates (latitude, longitude) to geomagnetic coordinates (latitude, longitude). The coordinates in each case are in degrees.

Equations

Definition of Symbols (all refer to degrees)

λ latitude (input)

ϕ longitude (input)

θ co-latitude $(90° - \lambda)$

Φ geomagnetic latitude (output)

Λ geomagnetic longitude (output)

Θ geomagnetic co-latitude $(90° - \Phi)$

θ_1 co-latitude of north magnetic pole (program constant)

ϕ_1 longitude of north magnetic pole (program constant)

The geomagnetic position is determined by the equations:

$$\sin \Phi = \cos \theta_1 \sin \lambda + \sin \theta_1 \cos \lambda \cos (\phi - \phi_1)$$

$$\cos \Lambda = \frac{\cos \theta_1 \cos \Theta - \cos \theta}{\sin \theta_1 \sin \Theta}$$

NOTE: (θ_1, ϕ_1) are defined in the program to be (11.494°, −69.68°). These values may be re-determined by the user before compilation if desired.

Calling Sequence

CALL GTMC (A, B, C, D)

where

A and B are input; C and D are output.

A, B are latitude, longitude

C, D are geomagnetic latitude, longitude

Restrictions

The input coordinates should satisfy the following inequalities:

$-90° \leq A \leq 90°$

$-180° \leq B \leq 180°$

C and D need not be separate locations from A and B i.e.,

CALL GTMC (A, B, A, B) is acceptable.

System subroutines MINIF, ABSF, SIGNF, SQRTF, SINF, COSF, ASINE, ACOSD are used.

NOTE: This routine is a modification of Subroutine GCON obtained from the Fields and Plasmas Branch, GSFC. The original routine converts coordinates in either direction.

Definitions of Program Symbols

Program Symbol	Definition
A	λ
B	ϕ

Program Symbol	Definition
C	Φ
D	Λ
THK	θ_1
PHK	ϕ_1
SK	Sin θ_1
CK	Cos θ_1
E	latitude in radians
CT	$\sin \lambda$ (= Cos θ)
DEL	$(\phi - \phi_1)$ (if $\phi \leq 180°$)
COS T	Cos Θ (= Sin Φ)
SIN T	Sin Θ (= Cos Φ)
ARG	Cos $(180° - \Lambda)$ for $0 \leq$ DEL $\leq 180°$
	Cos $(\Lambda + 180°)$ for DEL < 0 DEL $> 180°$.

March 1965

Program Writeup

0. Programmer—C. Hanley

1. Program Name—SUBROUTINE DEN

2. Programming System—FAP

3. General Description—

This binary subroutine (DEN) sets tape units B6, A6, C5, and C6 to low density when called into the program. Subroutine DEN is called into operation by the following statement:

```
CALL DEN
```

OPERATING INSTRUCTIONS

Sense Switches

1. Sense Switch 1 and 2

SSW 1 and 2 are always in a normal position, which is the up position. These Sense Switches were originally put into the program for a purpose that never materialized. They were never deleted because the idea might have been incorporated at anytime.

2. Sense Switch 3

When Sense Switch 3 is in the normal position the program will write three pressure plot tapes on channels B6, C5, C6 respectively. In the down position no plot output tapes will be written.

3. Sense Switch 4

In the normal position the optional output (T, V, C, P for every point) will be written out on tape. For no optional output SSW 4 must be down.

DATA CARDS

There are 14 data cards for each pass or orbit of the satellite to be processed. A blank card following the data cards indicates end of data and end of job. The format for these cards is as follows:

Card No.	Col.	Fortran Symbol	Job Format
1	1-14	blank	—
	15-18	NEDI	I4
	19-28	blank	—
	29-32	NORB	I4
2	1-72	BI	9E8.2
3	1-72	BI	9E8.2
4	1-72	VC1	9F8.6
5	1-56	VC2	7F8.6
	59-72	blank	—
6	1-72	RI	9E8.2

Card No.	Col.	Fortran Symbol	Job Format
7	1-56	RI2	7E8.2
	57-72	blank	—
8	1-6	XHL	F6.3
	7-12	XML	F6.3
	13-18	XLL	F6.3
	19-24	X2HL	F6.3
	25-30	X2ML	F6.3
	31-36	X2LL	F6.3
	37-72	blank	—
9	1-8	TO	F8.2
	9-16	TI	F8.2
	17-24	WO	F8.2
	25-32	WI	F8.2
	33-35	HID	A3
	36-72	blank	—
*10	1-6	XHF	F6.3
	7-12	XMF	F6.3
	13-18	XLF	F6.3
	19-24	X2HF	F6.3
	25-30	X2MF	F6.3
	31-36	X2LF	F6.3
	37-72	blank	—
*11	1-54	BV1	9F6.3
	55-72	blank	—
*12	1-54	BV1	9F6.3
	55-72	blank	—
*13	1-54	BV2	9F6.3
	55-72	blank	—
*14	1-54	BV2	9F6.3
	55-72	blank	—
15	1-72	blank	—

*These cards are supplied for each pass by the MCP program.

TAPE FORMATS

Input Data Tapes

Pressure Data Tape

The pressure data tape is a binary tape with standard FORTRAN record lengths of 255 words, the first record being an identification record of each orbit containing satellite number, month, day, year, station number, and analog tape number for each recorded orbit. Following the orbit identification record there are data records of 255 words containing the selected DC voltage for all four gauges. Following the data words is a sentinel, which is a record of all nines (9999's) indicating the end of data.

Aspect Data Tape

The aspect data tape is a binary tape with standard FORTRAN records of 255 words. Each aspect tape has numerous passes of aspect data. Each pass consists of an identification record of 209 words containing satellite number, month, day, year, station number and analog tape number. Words 1-200 contain orbital tape input data which are not relavent to the pressure density program. Following the identification record (ID) are data records each containing 141 words in length. Every pass of data is separated by a record of nines (9999's) to indicate end of data.

Output Data Tapes

P-D Output Tape

The pressure-density output tape contains all computed parameters for each experiment gauge, as requested by the experimenter.

The output tape is in the BCD mode. This tape, containing records of varying lengths, is placed on unit A3.

Density Plot Tape

The density plot tape, contains aspect and density values for all gauges and is formatted for plotting purposes. (S-C-4020 is used to plot these values.)

The density plot tape contains records of variable lengths and is in the BCD mode. It is placed on unit A6.

Pressure Plot Tapes

The pressure plot output tapes contain the raw pressure values, normalized pressure, time, and other parameters formatted for plotting purposes.

The pressure plot tapes are in the BCD mode and contain records of varying lengths. These tapes are placed on units B6, C5, and C6.

PRESSURE TAPE FORMAT

630403
AOPB-WPH

S-6 PRESSURE GAUGE BINARY TAPE FORMAT

THE PRESSURE GAUGE BINARY TAPE CONSISTS OF 1 TITLE RECORD, 1 OR MORE DATA RECORDS, 2 EOF'S.

TITLE RECORD

WORD NO.	DESCRIPTION
0	STANDARD FORTRAN RECORD SIZE INDICATOR. (FIXED POINT) *
1	SATELLITE NO. = 6
2	MONTH — DATE OF FIRST DATA FRAME ON S-6 BINARY TELEMETRY TAPE
3	DAY
4	YEAR
5	STATION NO.
6	ANALOG TAPE NO.
7	IRRELEVANT
8	S-6 PRESSURE GAUGES I.D. = 60000004
9-255	IRRELVANT

* THE RECORD SIZE INDICATOR = 00377000001 OCTAL IS THE ONLY FIXED POINT NUMBER IN EACH RECORD.

PRESSURE TAPE FORMAT

DATA RECORD

WORD NO.	DESCRIPTION **		
0	STANDARD FORTRAN RECORD SIZE INDICATOR. (FIXED POINT) *		
1	DAY COUNT OF YEAR		TIME OF
2	MILLISECONDS OF DAY		FRAME
3- 5	CHS.3,19,35	DC (VOLTS)	BAYARD ALPERT 1
6- 8	CHS.4,20,36	AC (VOLTS)	
9-11	CHS.5,21,37	DC (VOLTS)	BAYARD ALPERT 2
12-14	CHS.6,22,38	AC (VOLTS)	
15-17	CHS.10,26,42	(VOLTS)	REDHEAD 1
18-20	CHS.11,27,43	(VOLTS)	REDHEAD 2
21	SUBCOM POSITION		
22	CH.31	(VOLTS)	CONTENTS OF CHS.31 AND 33
23	CH.31	(DEGREES)	ARE INTERPRETED BY THE
24	CH.33	(VOLTS)	VALUE OF THE SUBCOM POS-
25	CH.33	(DEGREES)	ITION. (SEE ATTACHMENT)
26-50	NEXT FRAME OF DATA IN SAME FORM AS 1-25		
*	*		
*	*		
*	*		
226-250	TENTH FRAME OF RECORD		
251-255	SPARES		

** SEE ATTACHMENT FOR VALUES SIGNIFIING END OF DATA OR IRRELEVANT DATA.

630508
A@PB-MLR

S-6 ASPECT AND SATELLITE P@SITI@N DATA
BINARY TAPE

THE S-6 ASPECT AND SATELLITE P@SITI@N DATA BINARY TAPE C@NSISTS @F 1 TITLE REC@RD, 1 @R M@RE DATA REC@RDS, 2 E@F'S. THERE IS T@ BE @NE DATA REC@RD F@R EACH TIME BL@CK IN THE TELEMETRY DATA IDENTIFIED IN W@RDS 201-206 @F THE TITLE REC@RD.*

TITLE REC@RD

W@RD N@.	F@RM	DESCRIPTI@N
0	FIXED PT.	STANDARD F@RTRAN REC@RD SIZE INDICAT@R. =000321000001 @CTAL IN THE TITLE REC@RD @N THIS TAPE. THIS INDICATES A T@TAL W@RD C@UNT PER REC@RD @F 209 W@RDS.
1-200	FL@ATING PT.	INF@RMATI@N FR@M W@RDS 1-200 @F @RBITAL TAPE INPUT.
201	FL@ATING PT.	SATELLITE N@. = 6
202	FL@ATING PT.	M@NTH — DATE @F FIRST DATA FRAME
203	FL@ATING PT.	DAY — @N S-6 BINARY TELEMETRY
204	FL@ATING PT.	YEAR — TAPE
205	FL@ATING PT.	STATI@N N@.
206	FL@ATING PT.	ANAL@G TAPE N@.
207	FL@ATING PT.	IRRELEVANT
208	FL@ATING PT.	S-6 ASPECT I.D.= 60000000
209	FL@ATING PT.	IRRELEVANT

* N@MINALLY, A TIME BL@CK IS 21 SEC., I.E., 7 SEC. MULTIVIBRAT@R CYCLE AND A 14 SEC. MULTIVIBRAT@R CYCLE.

ASPECT TAPE FORMAT

DATA RECORD WORD NO.	FORM	DESCRIPTION
0	FIXED PT.	STANDARD FORTRAN RECORD SIZE INDICATOR. = 000215000001 OCTAL IN EACH DATA RECORD ON THIS TAPE. THIS INDICATES A TOTAL WORD COUNT PER RECORD OF 141 WORDS.
1	FLOATING PT.	DATE TIME OF DATA
2	FLOATING PT.	DAY COUNT OF YEAR
3	FLOATING PT.	SECONDS OF DAY
4	FLOATING PT.	X SATELLITE POSITION
5	FLOATING PT.	Y VECTOR IN KM.
6	FLOATING PT.	Z
7	FLOATING PT.	XDOT SATELLITE VELOCITY
8	FLOATING PT.	YDOT VECTOR IN KM./SEC.
9	FLOATING PT.	ZDOT
10	FLOATING PT.	LONGITUDE SUBSATELLITE
11	FLOATING PT.	LATITUDE POSITION IN DEGREES
12	FLOATING PT.	ALTITUDE IN KM.
13	FLOATING PT.	LOCAL APPARENT TIME IN HOURS
14	FLOATING PT.	MAGNITUDE OF POSITION VECTOR IN KM.
15	FLOATING PT.	MAGNITUDE OF VELOCITY VECTOR IN KM./SEC.
16	FLOATING PT.	POSITION VECTOR R.A. IN DEGREES
17	FLOATING PT.	POSITION VECTOR DECLINATION IN DEGREES
18	FLOATING PT.	VELOCITY VECTOR R.A. IN DEGREES
19	FLOATING PT.	VELOCITY VECTOR DECLINATION IN DEGREES
20	FLOATING PT.	SUN VECTOR R.A. IN DEGREES
21	FLOATING PT.	SUN VECTOR DECLINATION IN DEGREES
22	FLOATING PT.	MOMENTUM VECTOR R.A. IN DEGREES
23	FLOATING PT.	MOMENTUM VECTOR DECLINATION IN DEGREES
24	FLOATING PT.	ASPECT SENSOR R.A. IN DEGREES
25	FLOATING PT.	ASPECT SENSOR DECLINATION IN DEGREES
26	FLOATING PT.	ETP1 SENSOR R.A. IN DEGREES
27	FLOATING PT.	ETP1 SENSOR DECLINATION IN DEGREES
28	FLOATING PT.	ETP2 SENSOR R.A. IN DEGREES
29	FLOATING PT.	ETP2 SENSOR DECLINATION IN DEGREES

30	FLOATING PT.	B.A.1 SENSOR R.A. IN DEGREES
31	FLOATING PT.	B.A.1 SENSOR DECLINATION IN DEGREES
32	FLOATING PT.	B.A.2 SENSOR R.A. IN DEGREES
33	FLOATING PT.	B.A.2 SENSOR DECLINATION IN DEGREES
34	FLOATING PT.	M.S.1 SENSOR R.A. IN DEGREES
35	FLOATING PT.	M.S.1 SENSOR DECLINATION IN DEGREES
36	FLOATING PT.	M.S.2 SENSOR R.A. IN DEGREES
37	FLOATING PT.	M.S.2 SENSOR DECLINATION IN DEGREES
38	FLOATING PT.	R.H.1 SENSOR R.A. IN DEGREES
39	FLOATING PT.	R.H.1 SENSOR DECLINATION IN DEGREES
40	FLOATING PT.	R.H.2 SENSOR R.A. IN DEGREES
41	FLOATING PT.	R.H.2 SENSOR DECLINATION IN DEGREES
42	FLOATING PT.	ASPECT SENSOR A* IN DEGREES
43	FLOATING PT.	ETP1 SENSOR A* IN DEGREES
44	FLOATING PT.	ETP2 SENSOR A* IN DEGREES
45	FLOATING PT.	B.A.1 SENSOR A* IN DEGREES
46	FLOATING PT.	B.A.2 SENSOR A* IN DEGREES
47	FLOATING PT.	M.S.1 SENSOR A* IN DEGREES
48	FLOATING PT.	M.S.2 SENSOR A* IN DEGREES
49	FLOATING PT.	R.H.1 SENSOR A* IN DEGREES
50	FLOATING PT.	R.H.2 SENSOR A* IN DEGREES
51	FLOATING PT.	ELAPSED T.IN SEC.OF DAY OF ASPECT S.MAX.RAM V
52	FLOATING PT.	ASPECT SENSOR MAX. RAM VELOCITY IN KM./SEC.
53	FLOATING PT.	ASPECT SENSOR MAX. RAM A* IN DEGREES
54	FLOATING PT.	ELAPSED T.IN SEC.OF DAY OF ETP1 S.MAX.RAM V.
55	FLOATING PT.	ETP1 SENSOR MAX.RAM VELOCITY IN KM./SEC.
56	FLOATING PT.	ETP1 SENSOR MAX.RAM A* IN DEGREES
57	FLOATING PT.	ELAPSED T.IN SEC.OF DAY OF ETP2 S.MAX.RAM V.
58	FLOATING PT.	ETP2 SENSOR MAX. RAM VELOCITY IN KM./SEC.
59	FLOATING PT.	ETP2 SENSOR MAX. RAM A* IN DEGREES
60	FLOATING PT.	ELAPSED T.IN SEC.OF DAY OF B.A.1 S.MAX.RAM V.
61	FLOATING PT.	B.A.1 SENSOR MAX. RAM VELOCITY IN KM./SEC.
62	FLOATING PT.	B.A.1 SENSOR MAX. RAM A* IN DEGREES
63	FLOATING PT.	ELAPSED T.IN SEC.OF DAY OF B.A.2 S.MAX.RAM V.
64	FLOATING PT.	B.A.2 SENSOR MAX. RAM VELOCITY IN KM./SEC.
65	FLOATING PT.	B.A.2 SENSOR MAX. RAM A* IN DEGREES
66	FLOATING PT.	ELAPSED T.IN SEC.OF DAY OF M.S.1 S.MAX.RAM V.
67	FLOATING PT.	M.S.1 SENSOR MAX. RAM VELOCITY IN KM./SEC.

ASPECT TAPE FORMAT

68	FLOATING PT.	M.S SENSOR MAX. RAM A* IN DEGREES
69	FLOATING PT.	ELAPSED T.IN SEC.OF DAY OF M.S.2 S.MAX.RAM V.
70	FLOATING PT.	M.S.2 SENSOR MAX.RAM VELOCITY IN KM./SEC.
71	FLOATING PT.	M.S.2 SENSOR MAX.RAM A* IN DEGREES
72	FLOATING PT.	ELAPSED T.IN SEC.OF DAY OF R.H.1 S.MAX.RAM V.
73	FLOATING PT.	R.H.1 SENSOR MAX. RAM VELOCITY IN KM./SEC.
74	FLOATING PT.	R.H.1 SENSOR MAX. RAM A* IN DEGREES
75	FLOATING PT.	ELAPSED T.IN SEC.OF DAY OF R.H.2 S.MAX.RAM V.
76	FLOATING PT.	R.H.2 SENSOR MAX. RAM VELOCITY IN KM./SEC.
77	FLOATING PT.	R.H.2 SENSOR MAX. RAM A* IN DEGREES
78	FLOATING PT.	ELAPSED T.IN SEC.OF DAY OF ASP.S.MIN.RAM V.
79	FLOATING PT.	ASPECT SENSOR MIN. RAM VELOCITY IN KM./SEC.
80	FLOATING PT.	ASPECT SENSOR MIN. RAM A* IN DEGREES
81	FLOATING PT.	ELAPSED T.IN SEC.OF DAY OF ETP1 S.MIN.RAM V.
82	FLOATING PT.	ETP1 SENSOR MIN. RAM VELOCITY IN KM./SEC.
83	FLOATING PT.	ETP1 SENSOR MIN. RAM A* IN DEGREES
84	FLOATING PT.	ELAPSED T.IN SEC.OF DAY OF ETP2 S.MIN.RAM V.
85	FLOATING PT.	ETP2 SENSOR MIN. RAM VELOCITY IN KM./SEC.
86	FLOATING PT.	ETP2 SENSOR MIN. RAM A* IN DEGREES
87	FLOATING PT.	ELAPSED T.IN SEC.OF DAY OF BA 1 S.MIN.RAM V.
88	FLOATING PT.	B.A.1 SENSOR MIN. RAM VELOCITY IN KM./SEC.
89	FLOATING PT.	B.A.1 SENSOR MIN. RAM A* IN DEGREES
90	FLOATING PT.	ELAPSED T.IN SEC.OF DAY OF BA 2 S.MIN.RAM V.
91	FLOATING PT.	B.A.2 SENSOR MIN. RAM VELOCITY IN KM./SEC.
92	FLOATING PT.	B.A.2 SENSOR MIN. RAM A* IN DEGREES
93	FLOATING PT.	ELAPSED T.IN SEC.OF DAY OF MS 1 S.MIN.RAM V.
94	FLOATING PT.	M.S.1 SENSOR MIN. RAM VELOCITY IN KM./SEC.
95	FLOATING PT.	M.S.1 SENSOR MIN. RAM A* IN DEGREES
96	FLOATING PT.	ELAPSED T.IN SEC.OF DAY OF MS 2 S.MIN.RAM V.
97	FLOATING PT.	M.S.2 SENSOR MIN. RAM VELOCITY IN KM./SEC.
98	FLOATING PT.	M.S.2 SENSOR MIN. RAM A* IN DEGREES
99	FLOATING PT.	ELAPSED T.IN SEC.OF DAY OF RH 1 S.MIN.RAM V.
100	FLOATING PT.	R.H.1 SENSOR MIN. RAM VELOCITY IN KM./SEC.
101	FLOATING PT.	R.H.1 SENSOR MIN. RAM A* IN DEGREES
102	FLOATING PT.	ELAPSED T.IN SEC.OF DAY OF RH 2 S.MIN.RAM V.
103	FLOATING PT.	R.H.2 SENSOR MIN. RAM VELOCITY IN KM./SEC.
104	FLOATING PT.	R.H.2 SENSOR MIN. RAM A* IN DEGREES
105	FLOATING PT.	ASPECT SENSOR AV. RAM VELOCITY IN KM./SEC.
106	FLOATING PT.	ETP1 SENSOR AV. RAM VELOCITY IN KM./SEC.
107	FLOATING PT.	ETP2 SENSOR AV. RAM VELOCITY IN KM./SEC.
108	FLOATING PT.	B.A.1 SENSOR AV. RAM VELOCITY IN KM./SEC.
109	FLOATING PT.	B.A.2 SENSOR AV. RAM VELOCITY IN KM./SEC.
110	FLOATING PT.	M.S.1 SENSOR AV. RAM VELOCITY IN KM./SEC.
111	FLOATING PT.	M.S.2 SENSOR AV. RAM VELOCITY IN KM./SEC.
112	FLOATING PT.	R.H.1 SENSOR AV. RAM VELOCITY IN KM./SEC.

113	FLOATING PT.	R.H SENSOR AV. RAM VELOCITY IN KM./SEC.
114	FLOATING PT.	ELAPSED T.IN SEC.OF DAY ASP.S.MIN.SUN ANG.
115	FLOATING PT.	ASPECT SENSOR MIN.SUN ANG. IN DEGREES
116	FLOATING PT.	ELAPSED T.IN SEC.OF DAY OF ETP1 S.MIN SUN A.
117	FLOATING PT.	ETP1 SENSOR MIN.SUN ANGLE IN DEGREES
118	FLOATING PT.	ELAPSED T.IN SEC.OF DAY OF ETP2 S.MIN SUN A.
119	FLOATING PT.	ETP2 SENSOR MIN.SUN ANGLE IN DEGREES
120	FLOATING PT.	ELAPSED T.IN SEC.OF DAY OF BA 1 S.MIN SUN A.
121	FLOATING PT.	BA 1 SENSOR MIN.SUN ANGLE IN DEGREES
122	FLOATING PT.	ELAPSED T.IN SEC.OF DAY OF BA 2 S.MIN SUN A.
123	FLOATING PT.	BA 2 SENSOR MIN.SUN ANGLE IN DEGREES
124	FLOATING PT.	ELAPSED T.IN SEC.OF DAY OF MS 1 S.MIN SUN A
125	FLOATING PT.	MS 1 SENSOR MIN.SUN ANGLE IN DEGREES
126	FLOATING PT.	ELAPSED T.IN SEC.OF DAY OF MS 2 S.MIN SUN A.
127	FLOATING PT.	MS 2 SENSOR MIN.SUN ANGLE IN DEGREES
128	FLOATING PT.	ELAPSED T.IN SEC.OF DAY OF RH 1 S.MIN SUN A.
129	FLOATING PT.	RH 1 SENSOR MIN.SUN ANGLE IN DEGREES
130	FLOATING PT.	ELAPSED T.IN SEC.OF DAY OF RH 2 S.MIN SUN A.
131	FLOATING PT.	RH 2 SENSOR MIN.SUN ANGLE IN DEGREES
132	FLOATING PT.	T SUB 0 IN SECONDS OF DAY
133	FLOATING PT.	T SUB F IN SECONDS OF DAY
134	FLOATING PT.	BETA, MOM.VECTOR-SUN OR MOON ANGLE IN DEG.
135	FLOATING PT.	THETA,PREC.CONE HALF ANGLE IN DEG.
136	FLOATING PT.	PHI DOT,EULERIAN PREC.VEL. IN DEG./SEC.
137	FLOATING PT.	PSI DOT,EULERIAN SPIN VEL. IN DEG./SEC.
138	FLOATING PT.	ROTATION RATE IN DEGREES/SEC.
139	FLOATING PT.	A SUB 0
140	FLOATING PT.	B SUB 0
141	FLOATING PT.	MEASURE OF ASPECT RELIABILITY IN DEGREES
142	FLOATING PT.	1 OR 0 0 = RA & DEC. SUN. 1 = RA & DEC. MOON

NOTE-

1. A* MEANS ANGLE BETWEEN THE GIVEN SENSOR AND THE VELOCITY VECTOR

END OF FILE

2 EOF'S FOLLOW LAST DATA RECORD.

SAMPLE PROGRAM OUTPUT

```
                SATELLITE NO. =      6.                    EDIT = 327     ORBIT = 711
                        MONTH =      5.
                          DAY =     20.
                         YEAR =     63.
                   STATION NO. =     19.
              ANALOG TAPE NO. =     30.
          PRESSURE GAUGES ID =      60000004.

                  SATELLITE   S6.
                 DATA ANALYSIS
        STATION - WOMMERA          DATE  5.20.63.
        ALTITUDE RANGE     (KM)    918.57 TO  908.86
        LATITUDE RANGE   (DEG.)    -46.62 TO  -36.92
        GEOMAGNETIC LAT (DEG.)     -57.35 TO  -46.14
        LONGITUDE RANGE (DEG.)     131.22 TO  144.09
        GEOMAGNETIC LONG(DEG.)    -153.10 TO -140.10
        LOCAL TIME        (HRS)      1.09 TO    2.00
                       TIME (GMT)
        FROM 140.DAYS  16 HRS  16 MIN   5.033 SEC
        TO   140.DAYS  16 HRS  20 MIN  16.924 SEC

      TIME  -  HRS =16     MIN =16     SEC =59.141

1BA1   0.189 0.285 0.495 0.611 0.721 0.859 1.065 1.172 1.345
2BA1   1.503 1.808 2.195 2.565 2.955 3.330 3.756 4.211 4.686

1BA2  -0.212-0.123 0.049 0.212 0.305 0.418 0.639 0.790 0.985
2BA2   1.164 1.488 1.868 2.170 2.538 2.883 3.307 3.720 4.235

       BAYARD ALPERT 2 DC SHIFT = .075
       RH1  - 2.75        RH2  - 3.22

       FLIGHT CAL   4.663 3.353 1.889 4.983 3.635 2.161

       TO =1000.000  TI = 313.000  MO =  16.000  MI =  16.000

       TORR/AMP 1 =  19.500      TORR/AMP 2 =  23.900
```

PRESSURE GAUGES DC OUTPUT VOLTAGES CONVERTED TO PRESSURE AND DENSITY

```
   TMAX(SEC)=58619.862   V(VOLT)=  1.574   C(AMP)= 0.31E-08   P(TORRS)= 0.75E-07
BA2    ALT= 918.4   LAT= -44.8   LONG= 134.4   LST=  1.30   DP = 0.        TXRAM=58619.645  RX =  2.129  DENSITY =0.
                                                                                                                  0.
   TMIN(SEC)=58619.646   V(VOLT)=  1.574   C(AMP)= 0.31E-08   P(TORRS)= 0.75E-07


   TMAX(SEC)=58619.301   V(VOLT)=  3.832   ADJ V=  3.801   C(AMP)= 0.17E-08   P(TORRS)= 0.29E-09
RH1    ALT= 918.4   LAT= -44.8   LONG= 134.4   LST=  1.30   DP =-0.34E-10  TXRAM=58619.431  RX =  2.129  DENSITY =0.212E-17
                                                                                                            0.388E-17
   TMIN(SEC)=58619.501   V(VOLT)=  3.794   ADJ V=  3.763   C(AMP)= 0.19E-08   P(TORRS)= 0.33E-09


   TMAX(SEC)=58619.869   P(TORRS)= 0.11E-08   TXRAM(SEC)=58619.854   MAX.RAM VEL.=4.428  SX= -0.434E 01  DENSITY =0.
                                                                                                                  0.
RH2    ALT= 918.4   LAT= -44.8   LONG= 134.4   LST=  1.30   DELTA P =-0.93E-10   AVE.RAM VEL.= -5.649   DENSITY =0.
                                                                                                                  0.
   TMIN(SEC)=58619.752   P(TORRS)= 0.12E-08   TNRAM(SEC)=58619.538    MIN.RAM VEL.= -6.871  SN = -0.674E 01


   TMAX(SEC)=58620.329   V(VOLT)=  1.582   C(AMP)= 0.32E-08   P(TORRS)= 0.77E-07
BA2    ALT= 918.4   LAT= -44.8   LONG= 134.4   LST=  1.30   DP = 0.51E-08  TXRAM=58620.312  RX =  2.129  DENSITY =0.315E-15
                                                                                                            0.576E-15
   TMIN(SEC)=58620.062   V(VOLT)=  1.561   C(AMP)= 0.30E-08   P(TORRS)= 0.72E-07


   TMAX(SEC)=58620.067   V(VOLT)=  3.909   ADJ V=  3.877   C(AMP)= 0.13E-08   P(TORRS)= 0.24E-09
RH1    ALT= 918.4   LAT= -44.8   LONG= 134.4   LST=  1.30   DP =-0.90E-10  TXRAM=58620.098  RX =  2.129  DENSITY =0.559E-17
                                                                                                            0.102E-16
   TMIN(SEC)=58619.984   V(VOLT)=  3.794   ADJ V=  3.763   C(AMP)= 0.19E-08   P(TORRS)= 0.33E-09


   TMAX(SEC)=58620.369   P(TORRS)= 0.98E-09   TXRAM(SEC)=58620.521   MAX.RAM VEL.=4.428  SX= -0.434E 01  DENSITY =0.
                                                                                                                  0.
RH2    ALT= 918.4   LAT= -44.8   LONG= 134.4   LST=  1.30   DELTA P =-0.22E-09   AVE.RAM VEL.= -5.649   DENSITY =0.
                                                                                                                  0.
   TMIN(SEC)=58620.252   P(TORRS)= 0.12E-08   TNRAM(SEC)=58620.205    MIN.RAM VEL.= -6.871  SN = -0.674E 01


   TMAX(SEC)=58621.112   V(VOLT)=  1.574   C(AMP)= 0.31E-08   P(TORRS)= 0.75E-07
BA2    ALT= 918.4   LAT= -44.8   LONG= 134.5   LST=  1.31   DP = 0.34E-08  TXRAM=58620.979  RX =  2.129  DENSITY =0.211E-15
```

```
                                                                                                                                0.386E-15
   TMIN(SEC)=58620.612   V(VOLT)=  1.561   C(AMP)= 0.30E-08   P(TORRS)= 0.72E-07


   TMAX(SEC)=58620.651   V(VOLT)=  3.845   ADJ V=  3.814   C(AMP)= 0.16E-08   P(TORRS)= 0.28E-09
RH1    ALT= 918.4   LAT= -44.8   LONG= 134.5   LST=  1.31   DP =-0.33E-10  TXRAM=58620.765  RX =  2.129  DENSITY =0.203E-17
                                                                                                                                0.371E-17
   TMIN(SEC)=58621.234   V(VOLT)=  3.807   ADJ V=  3.775   C(AMP)= 0.18E-08   P(TORRS)= 0.32E-09


   TMAX(SEC)=58621.135   P(TORRS)= 0.12E-08   TXRAM(SEC)=58621.188   MAX.RAM VEL.=4.428  SX= -0.434E 01  DENSITY =0.
                                                                                                                                0.
RH2    ALT= 918.4   LAT= -44.8   LONG= 134.5   LST=  1.31   DELTA P = 0.         AVE.RAM VEL.= -5.649   DENSITY =0.
                                                                                                                                0.
   TMIN(SEC)=58621.135   P(TORRS)= 0.12E-08   TNRAM(SEC)=58620.872    MIN.RAM VEL.= -6.871  SN = -0.674E 01


   TMAX(SEC)=58621.779   V(VOLT)=  1.561   C(AMP)= 0.30E-08   P(TORRS)= 0.72E-07
BA2    ALT= 918.4   LAT= -44.7   LONG= 134.5   LST=  1.31   DP =-0.95E-09  TXRAM=58621.646  RX =  2.129  DENSITY =0.586E-16
                                                                                                                                0.107E-15
   TMIN(SEC)=58621.929   V(VOLT)=  1.565   C(AMP)= 0.30E-08   P(TORRS)= 0.73E-07


   TMAX(SEC)=58621.901   V(VOLT)=  3.893   ADJ V=  3.861   C(AMP)= 0.14E-08   P(TORRS)= 0.25E-09
RH1    ALT= 918.4   LAT= -44.7   LONG= 134.5   LST=  1.31   DP =-0.83E-10  TXRAM=58622.099  RX =  2.129  DENSITY =0.514E-17
                                                                                                                                0.940E-17
   TMIN(SEC)=58621.817   V(VOLT)=  3.791   ADJ V=  3.760   C(AMP)= 0.20E-08   P(TORRS)= 0.33E-09


   TMAX(SEC)=58621.902   P(TORRS)= 0.13E-08   TXRAM(SEC)=58621.855   MAX.RAM VEL.=4.428  SX= -0.434E 01  DENSITY =0.
                                                                                                                                0.
RH2    ALT= 918.4   LAT= -44.7   LONG= 134.5   LST=  1.31   DELTA P = 0.13E-10   AVE.RAM VEL.= -5.649   DENSITY =0.
                                                                                                                                0.
   TMIN(SEC)=58621.519   P(TORRS)= 0.12E-08   TNRAM(SEC)=58621.539    MIN.RAM VEL.= -6.871  SN = -0.674E 01


   TMAX(SEC)=58622.079   V(VOLT)=  1.574   C(AMP)= 0.31E-08   P(TORRS)= 0.75E-07
BA2    ALT= 918.4   LAT= -44.7   LONG= 134.5   LST=  1.31   DP = 0.22E-08  TXRAM=58622.312  RX =  2.129  DENSITY =0.137E-15
                                                                                                                                0.251E-15
   TMIN(SEC)=58622.496   V(VOLT)=  1.555   C(AMP)= 0.30E-08   P(TORRS)= 0.73E-07


   TMAX(SEC)=58622.484   V(VOLT)=  3.842   ADJ V=  3.811   C(AMP)= 0.16E-08   P(TORRS)= 0.29E-09
```

PRESSURE GAUGES DC OUTPUT VOLTAGES CONVERTED TO ION CURRENT AND PRESSURE

TIME	GAUGE VOLTS	ADJ VOLTS	CURRENT	PRESSURE
		BA1 EMISSION CURRENT = -0.		
58619.144	0.444		0.27E-10	-0.
58619.151	3.832	3.801	0.17E-08	0.29E-09
58619.160	0.444		0.27E-10	-0.
58619.167	3.883	3.852	0.14E-08	0.25E-09
58619.177	0.431		0.27E-10	-0.
58619.184	3.921	3.890	0.12E-08	0.23E-09
		BA1 EMISSION CURRENT = -0.		
58619.194	0.431		0.27E-10	-0.
58619.201	3.858	3.826	0.15E-08	0.27E-09
58619.210	0.431		0.27E-10	-0.
58619.218	3.794	3.763	0.19E-08	0.33E-09
58619.227	0.431		0.27E-10	-0.
58619.234	3.807	3.775	0.18E-08	0.32E-09
		BA1 EMISSION CURRENT = -0.		
58619.244	0.444		0.27E-10	-0.
58619.251	3.845	3.814	0.16E-08	0.28E-09
58619.260	0.444		0.27E-10	-0.
58619.268	3.883	3.852	0.14E-08	0.25E-09
58619.277	0.431		0.27E-10	-0.
58619.284	3.921	3.890	0.12E-08	0.23E-09
		BA1 EMISSION CURRENT = -0.		
58619.293	0.431		0.27E-10	-0.
58619.301	3.832	3.801	0.17E-08	0.29E-09
58619.310	0.431		0.27E-10	-0.
58619.317	3.782	3.750	0.20E-08	0.34E-09
58619.327	0.431		0.27E-10	-0.
58619.334	3.807	3.775	0.18E-08	0.32E-09
		BA1 EMISSION CURRENT = -0.		
58619.344	0.444		0.27E-10	-0.
58619.351	3.858	3.826	0.15E-08	0.27E-09
58619.360	0.433		0.27E-10	-0.
58619.368	3.893	3.861	0.14E-08	0.25E-09
58619.377	0.420		0.26E-10	-0.
58619.384	3.944	3.912	0.11E-08	0.22E-09
		BA1 EMISSION CURRENT = -0.		
58619.394	0.420		0.26E-10	-0.
58619.401	3.804	3.772	0.19E-08	0.32E-09
58619.410	0.431		0.27E-10	-0.
58619.417	3.794	3.763	0.19E-08	0.33E-09
58619.427	0.431		0.27E-10	-0.
58619.434	3.820	3.788	0.18E-08	0.30E-09
		BA1 EMISSION CURRENT = -0.		
58619.444	0.444		0.27E-10	-0.
58619.451	3.858	3.826	0.15E-08	0.27E-09
58619.460	0.444		0.27E-10	-0.
58619.468	3.909	3.877	0.13E-08	0.24E-09
58619.477	0.444		0.27E-10	-0.
58619.484	3.959	3.928	0.11E-08	0.21E-09
		BA1 EMISSION CURRENT = -0.		
58619.494	0.431		0.27E-10	-0.
58619.501	3.794	3.763	0.19E-08	0.33E-09
58619.510	0.431		0.27E-10	-0.

TIME	GAUGE VOLTS	ADJ VOLTS	CURRENT	PRESSURE
		BA2 EMISSION CURRENT = -0.		
58619.146	1.574		0.31E-08	-0.
58619.152	3.782	3.405	0.54E-08	0.12E-08
58619.162	1.574		0.31E-08	-0.
58619.168	3.794	3.418	0.51E-08	0.12E-08
58619.179	1.574		0.31E-08	-0.
58619.185	3.820	3.443	0.47E-08	0.11E-08
		BA2 EMISSION CURRENT = -0.		
58619.196	1.574		0.31E-08	-0.
58619.202	3.832	3.456	0.45E-08	0.10E-08
58619.212	1.574		0.31E-08	-0.
58619.219	3.820	3.443	0.47E-08	0.11E-08
58619.229	1.561		0.30E-08	-0.
58619.235	3.807	3.431	0.49E-08	0.11E-08
		BA2 EMISSION CURRENT = -0.		
58619.246	1.574		0.31E-08	-0.
58619.252	3.769	3.393	0.56E-08	0.12E-08
58619.262	1.574		0.31E-08	-0.
58619.269	3.769	3.393	0.56E-08	0.12E-08
58619.279	1.574		0.31E-08	-0.
58619.285	3.782	3.405	0.54E-08	0.12E-08
		BA2 EMISSION CURRENT = -0.		
58619.295	1.574		0.31E-08	-0.
58619.302	3.807	3.431	0.49E-08	0.11E-08
58619.312	1.574		0.31E-08	-0.
58619.318	3.794	3.418	0.51E-08	0.12E-08
58619.329	1.574		0.31E-08	-0.
58619.335	3.820	3.443	0.47E-08	0.11E-08
		BA2 EMISSION CURRENT = -0.		
58619.346	1.561		0.30E-08	-0.
58619.352	3.858	3.482	0.42E-08	0.94E-09
58619.362	1.565		0.30E-08	-0.
58619.369	3.779	3.402	0.54E-08	0.12E-08
58619.379	1.565		0.30E-08	-0.
58619.385	3.766	3.390	0.57E-08	0.13E-08
		BA2 EMISSION CURRENT = -0.		
58619.396	1.565		0.30E-08	-0.
58619.402	3.753	3.377	0.59E-08	0.13E-08
58619.412	1.574		0.31E-08	-0.
58619.418	3.769	3.393	0.56E-08	0.12E-08
58619.429	1.574		0.31E-08	-0.
58619.435	3.807	3.431	0.49E-08	0.11E-08
		BA2 EMISSION CURRENT = -0.		
58619.446	1.574		0.31E-08	-0.
58619.452	3.832	3.456	0.45E-08	0.10E-08
58619.462	1.574		0.31E-08	-0.
58619.469	3.845	3.469	0.43E-08	0.98E-09
58619.479	1.561		0.30E-08	-0.
58619.485	3.858	3.482	0.42E-08	0.94E-09
		BA2 EMISSION CURRENT = -0.		
58619.496	1.561		0.30E-08	-0.
58619.502	3.744	3.367	0.61E-08	0.14E-08
58619.512	1.574		0.31E-08	-0.

58619.518	3.807	3.775	0.18E-08	0.32E-09	58619.519	3.744	3.367	0.61E-08	0.14E-08
58619.527	0.431		0.27E-10	-0.	58619.529	1.574		0.31E-08	-0.
58619.534	3.832	3.801	0.17E-08	0.29E-09	58619.535	3.782	3.405	0.54E-08	0.12E-08
		BA1 EMISSION CURRENT =		-0.		BA2 EMISSION CURRENT =		-0.	
58619.543	0.444		0.27E-10	-0.	58619.545	1.574		0.31E-08	-0.
58619.551	3.871	3.839	0.15E-08	0.26E-09	58619.552	3.807	3.431	0.49E-08	0.11E-08
58619.560	0.433		0.27E-10	-0.	58619.562	1.565		0.30E-08	-0.
58619.567	3.919	3.887	0.12E-08	0.23E-09	58619.568	3.817	3.440	0.48E-08	0.11E-08
58619.577	0.420		0.26E-10	-0.	58619.579	1.552		0.29E-08	-0.
58619.584	3.931	3.900	0.12E-08	0.22E-09	58619.585	3.830	3.453	0.46E-08	0.10E-08
		BA1 EMISSION CURRENT =		-0.		BA2 EMISSION CURRENT =		-0.	
58619.594	0.420		0.26E-10	-0.	58619.596	1.552		0.29E-08	-0.
58619.601	3.791	3.760	0.20E-08	0.33E-09	58619.602	3.830	3.453	0.46E-08	0.10E-08
58619.610	0.431		0.27E-10	-0.	58619.612	1.574		0.31E-08	-0.
58619.618	3.807	3.775	0.18E-08	0.32E-09	58619.619	3.769	3.393	0.56E-08	0.12E-08
58619.627	0.431		0.27E-10	-0.	58619.629	1.574		0.31E-08	-0.
58619.634	3.832	3.801	0.17E-08	0.29E-09	58619.635	3.756	3.380	0.58E-08	0.13E-08
		BA1 EMISSION CURRENT =		4.871		BA2 EMISSION CURRENT =		4.940	
58619.644	0.444		0.27E-10	0.54E-09	58619.646	1.574		0.31E-08	0.75E-07
58619.651	3.883	3.852	0.14E-08	0.25E-09	58619.652	3.769	3.393	0.56E-08	0.12E-08
58619.660	0.444		0.27E-10	0.54E-09	58619.662	1.574		0.31E-08	0.75E-07
58619.667	3.921	3.890	0.12E-08	0.23E-09	58619.668	3.794	3.418	0.51E-08	0.12E-08
58619.677	0.431		0.27E-10	0.53E-09	58619.679	1.561		0.30E-08	0.72E-07
58619.684	3.871	3.839	0.15E-08	0.26E-09	58619.685	3.807	3.431	0.49E-08	0.11E-08
		BA1 EMISSION CURRENT =		4.871		BA2 EMISSION CURRENT =		4.940	
58619.694	0.431		0.27E-10	0.53E-09	58619.696	1.574		0.31E-08	0.75E-07
58619.701	3.794	3.763	0.19E-08	0.33E-09	58619.702	3.807	3.431	0.49E-08	0.11E-08
58619.710	0.431		0.27E-10	0.53E-09	58619.712	1.574		0.31E-08	0.75E-07
58619.718	3.820	3.788	0.18E-08	0.30E-09	58619.719	3.845	3.469	0.43E-08	0.98E-09
58619.727	0.431		0.27E-10	0.53E-09	58619.729	1.574		0.31E-08	0.75E-07
58619.734	3.845	3.814	0.16E-08	0.28E-09	58619.735	3.858	3.482	0.42E-08	0.94E-09
		BA1 EMISSION CURRENT =		4.871		BA2 EMISSION CURRENT =		4.940	
58619.744	0.444		0.27E-10	0.54E-09	58619.746	1.574		0.31E-08	0.75E-07
58619.751	3.883	3.852	0.14E-08	0.25E-09	58619.752	3.782	3.405	0.54E-08	0.12E-08
58619.760	0.444		0.27E-10	0.54E-09	58619.762	1.574		0.31E-08	0.75E-07
58619.768	3.934	3.902	0.12E-08	0.22E-09	58619.769	3.769	3.393	0.56E-08	0.12E-08
58619.777	0.431		0.27E-10	0.53E-09	58619.779	1.574		0.31E-08	0.75E-07
58619.784	3.820	3.788	0.18E-08	0.30E-09	58619.785	3.782	3.405	0.54E-08	0.12E-08
		BA1 EMISSION CURRENT =		4.871		BA2 EMISSION CURRENT =		4.940	
58619.793	0.431		0.27E-10	0.53E-09	58619.795	1.574		0.31E-08	0.75E-07
58619.801	3.794	3.763	0.19E-08	0.33E-09	58619.802	3.782	3.405	0.54E-08	0.12E-08
58619.810	0.431		0.27E-10	0.53E-09	58619.812	1.574		0.31E-08	0.75E-07
58619.817	3.820	3.788	0.18E-08	0.30E-09	58619.818	3.820	3.443	0.47E-08	0.11E-08
58619.827	0.431		0.27E-10	0.53E-09	58619.829	1.574		0.31E-08	0.75E-07
58619.834	3.832	3.801	0.17E-08	0.29E-09	58619.835	3.832	3.456	0.45E-08	0.10E-08
		BA1 EMISSION CURRENT =		4.871		BA2 EMISSION CURRENT =		4.940	
58619.844	0.444		0.27E-10	0.54E-09	58619.846	1.574		0.31E-08	0.75E-07
58619.851	3.896	3.864	0.13E-08	0.25E-09	58619.852	3.845	3.469	0.43E-08	0.98E-09
58619.860	0.444		0.27E-10	0.54E-09	58619.862	1.574		0.31E-08	0.75E-07
58619.868	3.947	3.915	0.11E-08	0.21E-09	58619.869	3.807	3.431	0.49E-08	0.11E-08
58619.877	0.431		0.27E-10	0.53E-09	58619.879	1.574		0.31E-08	0.75E-07
58619.884	3.807	3.775	0.18E-08	0.32E-09	58619.885	3.744	3.367	0.61E-08	0.14E-08
		BA1 EMISSION CURRENT =		4.871		BA2 EMISSION CURRENT =		4.940	
58619.894	0.431		0.27E-10	0.53E-09	58619.896	1.574		0.31E-08	0.75E-07
58619.901	3.782	3.750	0.20E-08	0.34E-09	58619.902	3.756	3.380	0.58E-08	0.13E-08
58619.910	0.431		0.27E-10	0.53E-09	58619.912	1.574		0.31E-08	0.75E-07
58619.917	3.820	3.788	0.18E-08	0.30E-09	58619.918	3.782	3.405	0.54E-08	0.12E-08
58619.927	0.431		0.27E-10	0.53E-09	58619.929	1.561		0.30E-08	0.72E-07
58619.934	3.858	3.826	0.15E-08	0.27E-09	58619.935	3.807	3.431	0.49E-08	0.11E-08
		BA1 EMISSION CURRENT =		4.871		BA2 EMISSION CURRENT =		4.940	
58619.944	0.444		0.27E-10	0.54E-09	58619.946	1.574		0.31E-08	0.75E-07

58619.951	3.909	3.877	0.13E-08	0.24E-09	58619.952	3.820	3.443	0.47E-08	0.11E-08
58619.960	0.444		0.27E-10	0.54E-09	58619.962	1.574		0.31E-08	0.75E-07
58619.968	3.959	3.928	0.11E-08	0.21E-09	58619.969	3.845	3.469	0.43E-08	0.98E-09
58619.977	0.431		0.27E-10	0.53E-09	58619.979	1.574		0.31E-08	0.75E-07
58619.984	3.794	3.763	0.19E-08	0.33E-09	58619.985	3.832	3.456	0.45E-08	0.10E-08
		BA1 EMISSION CURRENT =	4.871		BA2 EMISSION CURRENT =	4.940			
58619.994	0.431		0.27E-10	0.53E-09	58619.996	1.574		0.31E-08	0.75E-07
58620.001	3.807	3.775	0.18E-08	0.32E-09	58620.002	3.756	3.380	0.58E-08	0.13E-08
58620.010	0.420		0.26E-10	0.52E-09	58620.012	1.565		0.30E-08	0.73E-07
58620.018	3.830	3.798	0.17E-08	0.30E-09	58620.019	3.766	3.390	0.57E-08	0.13E-08
58620.027	0.420		0.26E-10	0.52E-09	58620.029	1.552		0.29E-08	0.70E-07
58620.034	3.868	3.836	0.15E-08	0.27E-09	58620.035	3.779	3.402	0.54E-08	0.12E-08
		BA1 EMISSION CURRENT =	4.871		BA2 EMISSION CURRENT =	4.940			
58620.043	0.433		0.27E-10	0.53E-09	58620.045	1.552		0.29E-08	0.70E-07
58620.051	3.906	3.874	0.13E-08	0.24E-09	58620.052	3.791	3.415	0.52E-08	0.12E-08
58620.060	0.444		0.27E-10	0.54E-09	58620.062	1.561		0.30E-08	0.72E-07
58620.067	3.909	3.877	0.13E-08	0.24E-09	58620.068	3.820	3.443	0.47E-08	0.11E-08
58620.077	0.431		0.27E-10	0.53E-09	58620.079	1.574		0.31E-08	0.75E-07
58620.084	3.756	3.725	0.22E-08	0.37E-09	58620.085	3.807	3.431	0.49E-08	0.11E-08
		BA1 EMISSION CURRENT =	4.871		BA2 EMISSION CURRENT =	4.940			
58620.094	0.431		0.27E-10	0.53E-09	58620.096	1.574		0.31E-08	0.75E-07
58620.101	3.782	3.750	0.20E-08	0.34E-09	58620.102	3.832	3.456	0.45E-08	0.10E-08
58620.110	0.431		0.27E-10	0.53E-09	58620.112	1.574		0.31E-08	0.75E-07
58620.118	3.845	3.814	0.16E-08	0.28E-09	58620.119	3.832	3.456	0.45E-08	0.10E-08
58620.127	0.431		0.27E-10	0.53E-09	58620.129	1.574		0.31E-08	0.75E-07
58620.134	3.883	3.852	0.14E-08	0.25E-09	58620.135	3.769	3.393	0.56E-08	0.12E-08
		BA1 EMISSION CURRENT =	4.871		BA2 EMISSION CURRENT =	4.940			
58620.144	0.444		0.27E-10	0.54E-09	58620.146	1.574		0.31E-08	0.75E-07
58620.151	3.934	3.902	0.12E-08	0.22E-09	58620.152	3.769	3.393	0.56E-08	0.12E-08
58620.160	0.444		0.27E-10	0.54E-09	58620.162	1.561		0.30E-08	0.72E-07
58620.167	3.858	3.826	0.15E-08	0.27E-09	58620.168	3.782	3.405	0.54E-08	0.12E-08
58620.177	0.431		0.27E-10	0.53E-09	58620.179	1.561		0.30E-08	0.72E-07
58620.184	3.794	3.763	0.19E-08	0.33E-09	58620.185	3.782	3.405	0.54E-08	0.12E-08
		BA1 EMISSION CURRENT =	4.871		BA2 EMISSION CURRENT =	4.940			
58620.194	0.431		0.27E-10	0.53E-09	58620.196	1.561		0.30E-08	0.72E-07
58620.201	3.807	3.775	0.18E-08	0.32E-09	58620.202	3.807	3.431	0.49E-08	0.11E-08
58620.210	0.431		0.27E-10	0.53E-09	58620.212	1.574		0.31E-08	0.75E-07
58620.218	3.845	3.814	0.16E-08	0.28E-09	58620.219	3.832	3.456	0.45E-08	0.10E-08
58620.227	0.431		0.27E-10	0.53E-09	58620.229	1.574		0.31E-08	0.75E-07
58620.234	3.896	3.864	0.13E-08	0.25E-09	58620.235	3.858	3.482	0.42E-08	0.94E-09
		BA1 EMISSION CURRENT =	4.871		BA2 EMISSION CURRENT =	4.940			
58620.244	0.444		0.27E-10	0.54E-09	58620.246	1.574		0.31E-08	0.75E-07
58620.251	3.934	3.902	0.12E-08	0.22E-09	58620.252	3.782	3.405	0.54E-08	0.12E-08
58620.260	0.444		0.27E-10	0.54E-09	58620.262	1.574		0.31E-08	0.75E-07
58620.268	3.820	3.788	0.18E-08	0.30E-09	58620.269	3.756	3.380	0.58E-08	0.13E-08
58620.277	0.431		0.27E-10	0.53E-09	58620.279	1.561		0.30E-08	0.72E-07
58620.284	3.794	3.763	0.19E-08	0.33E-09	58620.285	3.756	3.380	0.58E-08	0.13E-08
		BA1 EMISSION CURRENT =	4.871		BA2 EMISSION CURRENT =	4.940			
58620.293	0.431		0.27E-10	0.53E-09	58620.295	1.561		0.30E-08	0.72E-07
58620.301	3.820	3.788	0.18E-08	0.30E-09	58620.302	3.794	3.418	0.51E-08	0.12E-08
58620.310	0.443		0.27E-10	0.54E-09	58620.312	1.582		0.32E-08	0.77E-07
58620.317	3.861	3.829	0.15E-08	0.27E-09	58620.318	3.810	3.434	0.49E-08	0.11E-08
58620.327	0.443		0.27E-10	0.54E-09	58620.329	1.582		0.32E-08	0.77E-07
58620.334	3.899	3.867	0.13E-08	0.24E-09	58620.335	3.835	3.459	0.45E-08	0.10E-08
		BA1 EMISSION CURRENT =	4.871		BA2 EMISSION CURRENT =	4.940			
58620.344	0.456		0.28E-10	0.56E-09	58620.346	1.582		0.32E-08	0.77E-07
58620.351	3.949	3.918	0.11E-08	0.21E-09	58620.352	3.848	3.472	0.43E-08	0.97E-09
58620.360	0.444		0.27E-10	0.54E-09	58620.362	1.574		0.31E-08	0.75E-07
58620.368	3.807	3.775	0.18E-08	0.32E-09	58620.369	3.845	3.469	0.43E-08	0.98E-09
58620.377	0.431		0.27E-10	0.53E-09	58620.379	1.561		0.30E-08	0.72E-07
58620.384	3.807	3.775	0.18E-08	0.32E-09	58620.385	3.744	3.367	0.61E-08	0.14E-08

		BA1 EMISSION CURRENT =				BA2 EMISSION CURRENT =			
58620.394	0.431		0.27E-10	0.53E-09	58620.396	1.574		0.31E-08	0.75E-07
58620.401	3.820	3.788	0.18E-08	0.30E-09	58620.402	3.769	3.393	0.56E-08	0.12E-08
58620.410	0.420		0.26E-10	0.52E-09	58620.412	1.565		0.30E-08	0.73E-07
58620.417	3.855	3.823	0.16E-08	0.28E-09	58620.418	3.779	3.402	0.54E-08	0.12E-08
58620.427	0.420		0.26E-10	0.52E-09	58620.429	1.565		0.30E-08	0.73E-07
58620.434	3.906	3.874	0.13E-08	0.24E-09	58620.435	3.804	3.428	0.50E-08	0.11E-08
		BA1 EMISSION CURRENT =				BA2 EMISSION CURRENT =			
58620.444	0.433		0.27E-10	0.53E-09	58620.446	1.565		0.30E-08	0.73E-07
58620.451	3.957	3.925	0.11E-08	0.21E-09	58620.452	3.817	3.440	0.48E-08	0.11E-08
58620.460	0.444		0.27E-10	0.54E-09	58620.462	1.574		0.31E-08	0.75E-07
58620.468	3.794	3.763	0.19E-08	0.33E-09	58620.469	3.807	3.431	0.49E-08	0.11E-08
58620.477	0.431		0.27E-10	0.53E-09	58620.479	1.561		0.30E-08	0.72E-07
58620.484	3.807	3.775	0.18E-08	0.32E-09	58620.485	3.832	3.456	0.45E-08	0.10E-08
		BA1 EMISSION CURRENT =				BA2 EMISSION CURRENT =			
58620.494	0.431		0.27E-10	0.53E-09	58620.496	1.574		0.31E-08	0.75E-07
58620.501	3.832	3.801	0.17E-08	0.29E-09	58620.502	3.794	3.418	0.51E-08	0.12E-08
58620.510	0.431		0.27E-10	0.53E-09	58620.512	1.574		0.31E-08	0.75E-07
58620.518	3.871	3.839	0.15E-08	0.26E-09	58620.519	3.769	3.393	0.56E-08	0.12E-08
58620.527	0.431		0.27E-10	0.53E-09	58620.529	1.574		0.31E-08	0.75E-07
58620.534	3.909	3.877	0.13E-08	0.24E-09	58620.535	3.782	3.405	0.54E-08	0.12E-08
		BA1 EMISSION CURRENT =				BA2 EMISSION CURRENT =			
58620.543	0.444		0.27E-10	0.54E-09	58620.545	1.574		0.31E-08	0.75E-07
58620.551	3.883	3.852	0.14E-08	0.25E-09	58620.552	3.794	3.418	0.51E-08	0.12E-08
58620.560	0.433		0.27E-10	0.53E-09	58620.562	1.565		0.30E-08	0.73E-07
58620.567	3.779	3.747	0.20E-08	0.34E-09	58620.568	3.779	3.402	0.54E-08	0.12E-08
58620.577	0.420		0.26E-10	0.52E-09	58620.579	1.565		0.30E-08	0.73E-07
58620.584	3.804	3.772	0.19E-08	0.32E-09	58620.585	3.804	3.428	0.50E-08	0.11E-08
		BA1 EMISSION CURRENT =				BA2 EMISSION CURRENT =			
58620.594	0.420		0.26E-10	0.52E-09	58620.596	1.552		0.29E-08	0.70E-07
58620.601	3.842	3.811	0.16E-08	0.29E-09	58620.602	3.830	3.453	0.46E-08	0.10E-08
58620.610	0.431		0.27E-10	0.53E-09	58620.612	1.561		0.30E-08	0.72E-07
58620.618	3.883	3.852	0.14E-08	0.25E-09	58620.619	3.858	3.482	0.42E-08	0.94E-09
58620.627	0.431		0.27E-10	0.53E-09	58620.629	1.574		0.31E-08	0.75E-07
58620.634	3.934	3.902	0.12E-08	0.22E-09	58620.635	3.769	3.393	0.56E-08	0.12E-08
		BA1 EMISSION CURRENT =				BA2 EMISSION CURRENT =			
58620.644	0.444		0.27E-10	0.54E-09	58620.646	1.574		0.31E-08	0.75E-07
58620.651	3.845	3.814	0.16E-08	0.28E-09	58620.652	3.769	3.393	0.56E-08	0.12E-08
58620.660	0.433		0.27E-10	0.53E-09	58620.662	1.565		0.30E-08	0.73E-07
58620.667	3.779	3.747	0.20E-08	0.34E-09	58620.668	3.753	3.377	0.59E-08	0.13E-08
58620.677	0.420		0.26E-10	0.51E-09	58620.679	1.565		0.30E-08	0.73E-07
58620.684	3.804	3.772	0.19E-08	0.32E-09	58620.685	3.779	3.402	0.54E-08	0.12E-08
		BA1 EMISSION CURRENT =				BA2 EMISSION CURRENT =			
58620.694	0.420		0.26E-10	0.51E-09	58620.696	1.565		0.30E-08	0.73E-07
58620.701	3.842	3.811	0.16E-08	0.29E-09	58620.702	3.804	3.428	0.50E-08	0.11E-08
58620.710	0.420		0.26E-10	0.51E-09	58620.712	1.565		0.30E-08	0.73E-07
58620.718	3.893	3.861	0.14E-08	0.25E-09	58620.719	3.830	3.453	0.46E-08	0.10E-08
58620.727	0.420		0.26E-10	0.51E-09	58620.729	1.552		0.29E-08	0.70E-07
58620.734	3.931	3.900	0.12E-08	0.22E-09	58620.735	3.842	3.466	0.44E-08	0.99E-09
		BA1 EMISSION CURRENT =				BA2 EMISSION CURRENT =			
58620.744	0.433		0.27E-10	0.53E-09	58620.746	1.552		0.29E-08	0.70E-07
58620.751	3.817	3.785	0.18E-08	0.31E-09	58620.752	3.817	3.440	0.48E-08	0.11E-08
58620.760	0.444		0.27E-10	0.54E-09	58620.762	1.561		0.30E-08	0.72E-07
58620.768	3.794	3.763	0.19E-08	0.33E-09	58620.769	3.744	3.367	0.61E-08	0.14E-08
58620.777	0.431		0.27E-10	0.53E-09	58620.779	1.574		0.31E-08	0.75E-07
58620.784	3.820	3.788	0.18E-08	0.30E-09	58620.785	3.769	3.393	0.56E-08	0.12E-08
		BA1 EMISSION CURRENT =				BA2 EMISSION CURRENT =			
58620.793	0.431		0.27E-10	0.53E-09	58620.795	1.574		0.31E-08	0.75E-07
58620.801	3.858	3.826	0.15E-08	0.27E-09	58620.802	3.782	3.405	0.54E-08	0.12E-08
58620.810	0.431		0.27E-10	0.53E-09	58620.812	1.574		0.31E-08	0.75E-07
58620.817	3.909	3.877	0.13E-08	0.24E-09	58620.818	3.807	3.431	0.49E-08	0.11E-08

58620.827	0.431		0.27E-10	0.53E-09	58620.829	1.574		0.31E-08	0.75E-07
58620.834	3.947	3.915	0.11E-08	0.21E-09	58620.835	3.832	3.456	0.45E-08	0.10E-08
		BA1 EMISSION CURRENT =		4.921		BA2 EMISSION CURRENT =		4.913	
58620.844	0.444		0.27E-10	0.54E-09	58620.846	1.574		0.31E-08	0.75E-07
58620.851	3.794	3.763	0.19E-08	0.33E-09	58620.852	3.820	3.443	0.47E-08	0.11E-08
58620.860	0.456		0.28E-10	0.55E-09	58620.862	1.570		0.31E-08	0.75E-07
58620.868	3.797	3.766	0.19E-08	0.32E-09	58620.869	3.835	3.459	0.45E-08	0.10E-08
58620.877	0.443		0.27E-10	0.54E-09	58620.879	1.570		0.31E-08	0.75E-07
58620.884	3.835	3.804	0.17E-08	0.29E-09	58620.885	3.772	3.396	0.55E-08	0.12E-08
		BA1 EMISSION CURRENT =		4.921		BA2 EMISSION CURRENT =		4.913	
58620.894	0.443		0.27E-10	0.54E-09	58620.896	1.570		0.31E-08	0.75E-07
58620.901	3.873	3.842	0.15E-08	0.26E-09	58620.902	3.759	3.383	0.58E-08	0.13E-08
58620.910	0.420		0.26E-10	0.51E-09	58620.912	1.552		0.29E-08	0.70E-07
58620.917	3.919	3.887	0.12E-08	0.23E-09	58620.918	3.766	3.390	0.57E-08	0.13E-08
58620.927	0.420		0.26E-10	0.51E-09	58620.929	1.565		0.30E-08	0.73E-07
58620.934	3.944	3.912	0.11E-08	0.22E-09	58620.935	3.791	3.415	0.52E-08	0.12E-08
		BA1 EMISSION CURRENT =		4.921		BA2 EMISSION CURRENT =		4.913	
58620.944	0.433		0.27E-10	0.53E-09	58620.946	1.565		0.30E-08	0.73E-07
58620.951	3.791	3.760	0.20E-08	0.33E-09	58620.952	3.791	3.415	0.52E-08	0.12E-08
58620.960	0.433		0.27E-10	0.53E-09	58620.962	1.565		0.30E-08	0.73E-07
58620.968	3.804	3.772	0.19E-08	0.32E-09	58620.969	3.804	3.428	0.50E-08	0.11E-08
58620.977	0.420		0.26E-10	0.51E-09	58620.979	1.565		0.30E-08	0.73E-07
58620.984	3.830	3.798	0.17E-08	0.30E-09	58620.985	3.842	3.466	0.44E-08	0.99E-09
		BA1 EMISSION CURRENT =		4.921		BA2 EMISSION CURRENT =		4.913	
58620.994	0.420		0.26E-10	0.51E-09	58620.996	1.552		0.29E-08	0.70E-07
58621.001	3.880	3.849	0.14E-08	0.26E-09	58621.002	3.842	3.466	0.44E-08	0.99E-09
58621.010	0.431		0.27E-10	0.53E-09	58621.012	1.574		0.31E-08	0.75E-07
58621.018	3.921	3.890	0.12E-08	0.23E-09	58621.019	3.756	3.380	0.58E-08	0.13E-08
58621.027	0.431		0.27E-10	0.53E-09	58621.029	1.574		0.31E-08	0.75E-07
58621.034	3.871	3.839	0.15E-08	0.26E-09	58621.035	3.769	3.393	0.56E-08	0.12E-08
		BA1 EMISSION CURRENT =		4.921		BA2 EMISSION CURRENT =		4.913	
58621.043	0.444		0.27E-10	0.54E-09	58621.045	1.574		0.31E-08	0.75E-07
58621.051	3.782	3.750	0.20E-08	0.34E-09	58621.052	3.769	3.393	0.56E-08	0.12E-08
58621.060	0.444		0.27E-10	0.54E-09	58621.062	1.574		0.31E-08	0.75E-07
58621.067	3.807	3.775	0.18E-08	0.32E-09	58621.068	3.782	3.405	0.54E-08	0.12E-08
58621.077	0.431		0.27E-10	0.53E-09	58621.079	1.561		0.30E-08	0.72E-07
58621.084	3.845	3.814	0.16E-08	0.28E-09	58621.085	3.820	3.443	0.47E-08	0.11E-08
		BA1 EMISSION CURRENT =		4.921		BA2 EMISSION CURRENT =		4.913	
58621.094	0.431		0.27E-10	0.53E-09	58621.096	1.561		0.30E-08	0.72E-07
58621.101	3.871	3.839	0.15E-08	0.26E-09	58621.102	3.832	3.456	0.45E-08	0.10E-08
58621.110	0.431		0.27E-10	0.53E-09	58621.112	1.574		0.31E-08	0.75E-07
58621.118	3.934	3.902	0.12E-08	0.22E-09	58621.119	3.858	3.482	0.42E-08	0.94E-09
58621.127	0.431		0.27E-10	0.53E-09	58621.129	1.574		0.31E-08	0.75E-07
58621.134	3.832	3.801	0.17E-08	0.29E-09	58621.135	3.794	3.418	0.51E-08	0.12E-08
		BA1 EMISSION CURRENT =		4.871		BA2 EMISSION CURRENT =		4.937	
58621.144	0.444		0.27E-10	0.54E-09	58621.146	1.574		0.31E-08	0.75E-07
58621.151	3.782	3.750	0.20E-08	0.34E-09	58621.152	3.744	3.367	0.61E-08	0.14E-08
58621.160	0.444		0.27E-10	0.54E-09	58621.162	1.574		0.31E-08	0.75E-07
58621.167	3.807	3.775	0.18E-08	0.32E-09	58621.168	3.756	3.380	0.58E-08	0.13E-08
58621.177	0.431		0.27E-10	0.53E-09	58621.179	1.574		0.31E-08	0.75E-07
58621.184	3.858	3.826	0.15E-08	0.27E-09	58621.185	3.794	3.418	0.51E-08	0.12E-08
		BA1 EMISSION CURRENT =		4.871		BA2 EMISSION CURRENT =		4.937	
58621.194	0.431		0.27E-10	0.53E-09	58621.196	1.574		0.31E-08	0.75E-07
58621.201	3.896	3.864	0.13E-08	0.25E-09	58621.202	3.807	3.431	0.49E-08	0.11E-08
58621.210	0.431		0.27E-10	0.53E-09	58621.212	1.574		0.31E-08	0.75E-07
58621.218	3.947	3.915	0.11E-08	0.21E-09	58621.219	3.832	3.456	0.45E-08	0.10E-08
58621.227	0.431		0.27E-10	0.53E-09	58621.229	1.574		0.31E-08	0.75E-07
58621.234	3.807	3.775	0.18E-08	0.32E-09	58621.235	3.820	3.443	0.47E-08	0.11E-08
		BA1 EMISSION CURRENT =		4.871		BA2 EMISSION CURRENT =		4.937	
58621.244	0.444		0.27E-10	0.54E-09	58621.246	1.574		0.31E-08	0.75E-07
58621.251	3.794	3.763	0.19E-08	0.33E-09	58621.252	3.845	3.469	0.43E-08	0.98E-09

52058619.301	-44.82	134.38	1.30	918.4PDD0.	0.598E-170.	0.
52058620.067	-44.80	134.42	1.30	918.4PDD0.576E-150	.102E-160.	0.
52058620.651	-44.77	134.46	1.31	918.4PDD0.386E-150	.371E-170.	0.
52058621.901	-44.75	134.50	1.31	918.4PDD0.107E-150	.940E-170.	0.
52058622.484	-44.72	134.54	1.31	918.4PDD0.251E-150	.480E-170.	0.
52058623.350	-44.69	134.58	1.32	918.3PDD0.347E-150	.513E-170.	0.
52058623.933	-44.67	134.62	1.32	918.3PDD0.742E-160.	0.	0.
52058624.700	-44.64	134.66	1.32	918.3PDD0.107E-150	.580E-170.	0.
52058625.383	-44.61	134.69	1.32	918.3PDD0.427E-160.	0.	0.
52058625.767	-44.59	134.73	1.33	918.3PDD0.108E-150	.268E-170.	0.
52058626.350	-44.56	134.77	1.33	918.3PDD0.	0.	0.
52058627.217	-44.54	134.81	1.33	918.3PDD0.	0.137E-170.	0.
52058627.783	-44.51	134.85	1.34	918.3PDD0.	0.109E-160.	0.
52058628.850	-44.48	134.89	1.34	918.3PDD0.264E-150	.928E-170.	0.
52058629.633	-44.46	134.93	1.34	918.3PDD0.	0.337E-180.	0.
52058630.300	-44.43	134.97	1.34	918.3PDD0.236E-150	.761E-170.	0.
52058631.066	-44.41	135.01	1.35	918.2PDD0.339E-160	.176E-160.	0.
52058631.750	-44.38	135.04	1.35	918.2PDD0.745E-160	.583E-170.	0.
52058632.433	-44.35	135.08	1.35	918.2PDD0.	0.	0.
52058632.916	-44.33	135.12	1.35	918.2PDD0.400E-150.		0.
52058633.399	-44.30	135.16	1.36	918.2PDD0.	0.128E-170.	0.
52058633.982	-44.28	135.20	1.36	918.2PDD0.	0.	0.
52058634.916	-44.25	135.23	1.36	918.2PDD0.	0.943E-170.	0.
52058635.899	-44.22	135.27	1.37	918.2PDD0.247E-150	.117E-160.	0.
52058636.582	-44.20	135.31	1.37	918.1PDD0.221E-150	.477E-170.	0.
52058636.866	-44.17	135.34	1.37	918.1PDD0.463E-150	.148E-160.	0.
52058638.032	-44.15	135.38	1.37	918.1PDD0.224E-150	.499E-170.	0.
52058638.616	-44.12	135.42	1.38	918.1PDD0.354E-150	.241E-170.	0.
52058639.382	-44.09	135.45	1.38	918.1PDD0.529E-150	.915E-170.	0.
52058639.966	-44.07	135.49	1.38	918.1PDD0.359E-150	.466E-170.	0.
52058640.832	-44.04	135.53	1.38	918.1PDD0.572E-150	.717E-170.	0.
52058641.516	-44.02	135.56	1.39	918.0PDD0.337E-170	.249E-170.	0.
52058641.616	-43.99	135.60	1.39	918.0PDD0.385E-150.	0.	0.
52058642.965	-43.97	135.64	1.39	918.0PDD0.	0.383E-170.	0.
52058643.648	-43.94	135.68	1.39	918.0PDD0.311E-150.	0.	0.
52058644.314	-43.91	135.71	1.40	918.0PDD0.983E-160	.685E-170.	0.
52058644.698	-43.89	135.75	1.40	918.0PDD0.572E-150	.100E-160.	0.
52058645.765	-43.86	135.79	1.40	918.0PDD0.	0.915E-170.	0.
52058646.348	-43.84	135.82	1.40	917.9PDD0.	0.636E-170.	0.
52058646.948	-43.81	135.86	1.41	917.9PDD0.	0.331E-180.	0.
52058647.798	-43.78	135.90	1.41	917.9PDD0.745E-160	.583E-170.	0.
52058648.181	-43.76	135.93	1.41	917.9PDD0.212E-150	.100E-160.	0.
52058649.148	-43.73	135.97	1.42	917.9PDD0.165E-150	.142E-160.	0.
52058649.531	-43.71	136.01	1.42	917.9PDD0.214E-150	.963E-170.	0.
52058650.598	-43.68	136.04	1.42	917.9PDD0.299E-150	.113E-160.	0.
52058651.281	-43.65	136.08	1.42	917.8PDD0.297E-150	.915E-170.	0.
52058652.064	-43.63	136.12	1.43	917.8PDD0.209E-150	.134E-170.	0.
52058652.648	-43.60	136.16	1.43	917.8PDD0.209E-150.	0.	0.
52058652.931	-43.57	136.20	1.43	917.8PDD0.951E-160	.717E-170.	0.
52058653.897	-43.54	136.24	1.43	917.8PDD0.308E-150	.533E-170.	0.
52058654.580	-43.51	136.27	1.44	917.7PDD0.332E-160	.127E-170.	0.
52058654.897	-43.49	136.31	1.44	917.7PDD0.476E-150	.131E-170.	0.
52058656.130	-43.46	136.35	1.44	917.7PDD0.193E-150	.260E-170.	0.
52058656.414	-43.43	136.39	1.45	917.7PDD0.237E-150	.691E-170.	0.
52058657.580	-43.40	136.43	1.45	917.7PDD0.282E-150	.116E-170.	0.
52058658.347	-43.37	136.47	1.45	917.6PDD0.	0.107E-160.	0.
52058658.930	-43.35	136.50	1.45	917.6PDD0.864E-160	.958E-170.	0.
52058659.713	-43.32	136.54	1.46	917.6PDD0.279E-160	.248E-170.	0.
52058660.381	-43.29	136.58	1.46	917.6PDD0.	0.110E-160.	0.
52058660.965	-43.26	136.62	1.46	917.6PDD0.276E-160	.995E-170.	0.

5.0	20.00.565E	010.122E	010.146E-0058619.869	0.000	0.	0.0000.111E-08	-8.95625	5055.
5.0	20.00.565E	010.122E	010.146E-0058619.885	0.000	8.947	0.0000.135E-08	-8.86846	5164.
5.0	20.00.565E	010.122E	010.146E-0058619.902	0.000	17.894	0.0000.130E-08	-8.88609	5142.
5.0	20.00.565E	010.122E	010.146E-0058619.918	0.000	26.841	0.0000.120E-08	-8.92125	5098.
5.0	20.00.565E	010.122E	010.146E-0058619.935	0.000	35.788	0.0000.111E-08	-8.95625	5055.
5.0	20.00.565E	010.122E	010.146E-0058619.952	0.000	44.598	0.0000.106E-08	-8.97369	5033.
5.0	20.00.565E	010.122E	010.146E-0058619.969	0.000	53.945	0.0000.981E-09	-9.00845	4989.
5.0	20.00.565E	010.122E	010.146E-0058619.985	0.000	62.892	0.0000.102E-08	-8.99109	5011.
5.0	20.00.565E	010.122E	010.146E-0058620.002	0.000	71.839	0.0000.130E-08	-8.88609	5142.
5.0	20.00.565E	010.122E	010.146E-0058620.019	0.000	80.786	0.0000.126E-08	-8.89935	5126.
5.0	20.00.565E	010.122E	010.146E-0058620.035	0.000	89.733	0.0000.121E-08	-8.91696	5104.
5.0	20.00.565E	010.122E	010.146E-0058620.052	0.000	98.680	0.0000.116E-08	-8.93454	5082.
5.0	20.00.565E	010.122E	010.146E-0058620.068	0.000	107.627	0.0000.106E-08	-8.97369	5033.
5.0	20.00.565E	010.122E	010.146E-0058620.085	0.000	116.573	0.0000.111E-08	-8.95625	5055.
5.0	20.00.565E	010.122E	010.146E-0058620.102	0.000	125.784	0.0000.102E-08	-8.99109	5011.
5.0	20.00.565E	010.122E	010.146E-0058620.119	0.000	134.731	0.0000.102E-08	-8.99109	5011.
5.0	20.00.565E	010.122E	010.146E-0058620.135	0.000	143.677	0.0000.125E-08	-8.90369	5120.
5.0	20.00.565E	010.122E	010.146E-0058620.152	0.000	152.624	0.0000.125E-08	-8.90369	5120.
5.0	20.00.565E	010.122E	010.146E-0058620.168	0.000	161.571	0.0000.120E-08	-8.92125	5098.
5.0	20.00.565E	010.122E	010.146E-0058620.185	0.000	170.518	0.0000.120E-08	-8.92125	5098.
5.0	20.00.565E	010.122E	010.146E-0058620.202	0.000	179.728	0.0000.111E-08	-8.95625	5055.
5.0	20.00.565E	010.122E	010.146E-0058620.219	0.000	188.675	0.0000.102E-08	-8.99109	5011.
5.0	20.00.565E	010.122E	010.146E-0058620.235	0.000	197.622	0.0000.942E-09	-9.02576	4968.
5.0	20.00.565E	010.122E	010.146E-0058620.252	0.000	206.569	0.0000.120E-08	-8.92125	5098.
5.0	20.00.565E	010.122E	010.146E-0058620.269	0.000	215.516	0.0000.130E-08	-8.88609	5142.
5.0	20.00.565E	010.122E	010.146E-0058620.285	0.000	224.463	0.0000.130E-08	-8.88609	5142.
5.0	20.00.565E	010.122E	010.146E-0058620.302	0.000	233.410	0.0000.115E-08	-8.93877	5077.
5.0	20.00.565E	010.122E	010.146E-0058620.318	0.000	242.357	0.0000.110E-08	-8.96041	5049.
5.0	20.00.565E	010.122E	010.146E-0058620.335	0.000	251.304	0.0000.101E-08	-8.99514	5006.
5.0	20.00.565E	010.122E	010.146E-0058620.352	0.000	260.514	0.0000.972E-09	-9.01244	4984.
5.0	20.00.565E	010.122E	010.164E-0058620.369	0.000	0.	0.0000.981E-09	-9.00845	4989.
5.0	20.00.565E	010.122E	010.164E-0058620.385	0.000	8.947	0.0000.135E-08	-8.86846	5164.
5.0	20.00.565E	010.122E	010.164E-0058620.402	0.000	17.894	0.0000.125E-08	-8.90369	5120.
5.0	20.00.565E	010.122E	010.164E-0058620.418	0.000	26.841	0.0000.121E-08	-8.91696	5104.
5.0	20.00.565E	010.122E	010.164E-0058620.435	0.000	35.788	0.0000.112E-08	-8.95208	5060.
5.0	20.00.565E	010.122E	010.164E-0058620.452	0.000	44.998	0.0000.107E-08	-8.96957	5038.
5.0	20.00.565E	010.122E	010.164E-0058620.469	0.000	53.945	0.0000.111E-08	-8.95625	5055.
5.0	20.00.565E	010.122E	010.164E-0058620.485	0.000	62.892	0.0000.102E-08	-8.99109	5011.
5.0	20.00.565E	010.122E	010.164E-0058620.502	0.000	71.839	0.0000.115E-08	-8.93877	5077.
5.0	20.00.565E	010.122E	010.164E-0058620.519	0.000	80.786	0.0000.125E-08	-8.90369	5120.
5.0	20.00.565E	010.122E	010.164E-0058620.535	0.000	89.733	0.0000.120E-08	-8.92125	5098.
5.0	20.00.565E	010.122E	010.164E-0058620.552	0.000	98.680	0.0000.115E-08	-8.93877	5077.
5.0	20.00.565E	010.122E	010.164E-0058620.568	0.000	107.627	0.0000.121E-08	-8.91696	5104.
5.0	20.00.565E	010.122E	010.164E-0058620.585	0.000	116.573	0.0000.112E-08	-8.95208	5060.
5.0	20.00.565E	010.122E	010.164E-0058620.602	0.000	125.784	0.0000.103E-08	-8.98702	5016.
5.0	20.00.565E	010.122E	010.164E-0058620.619	0.000	134.731	0.0000.942E-09	-9.02576	4968.
5.0	20.00.565E	010.122E	010.164E-0058620.635	0.000	143.677	0.0000.125E-08	-8.90369	5120.
5.0	20.00.565E	010.122E	010.164E-0058620.652	0.000	152.624	0.0000.125E-08	-8.90369	5120.
5.0	20.00.565E	010.122E	010.164E-0058620.668	0.000	161.571	0.0000.131E-08	-8.88170	5148.
5.0	20.00.565E	010.122E	010.164E-0058620.685	0.000	170.518	0.0000.121E-08	-8.91696	5104.
5.0	20.00.565E	010.122E	010.164E-0058620.702	0.000	179.728	0.0000.112E-08	-8.95208	5060.
5.0	20.00.565E	010.122E	010.164E-0058620.719	0.000	188.675	0.0000.103E-08	-8.98702	5016.
5.0	20.00.565E	010.122E	010.164E-0058620.735	0.000	197.622	0.0000.990E-09	-9.00443	4994.
5.0	20.00.565E	010.122E	010.164E-0058620.752	0.000	206.569	0.0000.107E-08	-8.96957	5038.
5.0	20.00.565E	010.122E	010.164E-0058620.769	0.000	215.516	0.0000.135E-08	-8.86846	5164.
5.0	20.00.565E	010.122E	010.164E-0058620.785	0.000	224.463	0.0000.125E-08	-8.90369	5120.
5.0	20.00.565E	010.122E	010.164E-0058620.802	0.000	233.410	0.0000.120E-08	-8.92125	5098.
5.0	20.00.565E	010.122E	010.164E-0058620.818	0.000	242.357	0.0000.111E-08	-8.95625	5055.
5.0	20.00.565E	010.122E	010.164E-0058620.835	0.000	251.304	0.0000.102E-08	-8.99109	5011.
5.0	20.00.565E	010.122E	010.164E-0058620.852	0.000	260.514	0.0000.106E-08	-8.97369	5033.

5.0	20.00.209E-060.213E	010.101E	0958619.862	7.549	0.	7.5490.750E-07	-7.12465	7344.
5.0	20.00.209E-060.213E	010.101E	0958619.879	7.549	8.947	7.4580.750E-07	-7.12465	7344.
5.0	20.00.209E-060.213E	010.101E	0958619.896	7.549	17.894	7.1850.750E-07	-7.12465	7344.
5.0	20.00.209E-060.213E	010.101E	0958619.912	7.549	26.841	6.7380.750E-07	-7.12465	7344.
5.0	20.00.209E-060.213E	010.101E	0958619.929	7.248	35.788	6.1300.721E-07	-7.14231	7322.
5.0	20.00.209E-060.213E	010.101E	0958619.946	7.549	44.598	5.3550.750E-07	-7.12465	7344.
5.0	20.00.209E-060.213E	010.101E	0958619.962	7.549	53.945	4.4850.750E-07	-7.12465	7344.
5.0	20.00.209E-060.213E	010.101E	0958619.979	7.549	62.892	3.5450.750E-07	-7.12465	7344.
5.0	20.00.209E-060.213E	010.101E	0958619.996	7.549	71.839	2.6000.750E-07	-7.12465	7344.
5.0	20.00.209E-060.213E	010.101E	0958620.012	7.344	80.786	1.7360.730E-07	-7.13665	7329.
5.0	20.00.209E-060.213E	010.101E	0958620.029	7.037	89.733	1.0370.700E-07	-7.15520	7306.
5.0	20.00.209E-060.213E	010.101E	0958620.045	7.037	98.680	0.5500.700E-07	-7.15520	7306.
5.0	20.00.209E-060.213E	010.101E	0958620.062	7.248	107.627	0.2590.721E-07	-7.14231	7322.
5.0	20.00.209E-060.213E	010.101E	0958620.079	7.549	116.573	0.1110.750E-07	-7.12465	7344.
5.0	20.00.209E-060.213E	010.101E	0958620.096	7.549	125.784	0.0440.750E-07	-7.12465	7344.
5.0	20.00.209E-060.213E	010.101E	0958620.112	7.549	134.731	0.0180.750E-07	-7.12465	7344.
5.0	20.00.209E-060.213E	010.101E	0958620.129	7.549	143.677	0.0070.750E-07	-7.12465	7344.
5.0	20.00.209E-060.213E	010.101E	0958620.146	7.549	152.624	0.0030.750E-07	-7.12465	7344.
5.0	20.00.209E-060.213E	010.101E	0958620.162	7.248	161.571	0.0020.721E-07	-7.14231	7322.
5.0	20.00.209E-060.213E	010.101E	0958620.179	7.248	170.518	0.0010.721E-07	-7.14231	7322.
5.0	20.00.209E-060.213E	010.101E	0958620.196	7.248	179.728	0.0010.721E-07	-7.14231	7322.
5.0	20.00.209E-060.213E	010.101E	0958620.212	7.549	188.675	0.0010.750E-07	-7.12465	7344.
5.0	20.00.209E-060.213E	010.101E	095 620.229	7.549	197.622	0.0020.750E-07	-7.12465	7344.
5.0	20.00.209E-060.213E	010.101E	0958620.246	7.549	206.569	0.0030.750E-07	-7.12465	7344.
5.0	20.00.209E-060.213E	010.101E	0958620.262	7.549	215.516	0.0070.750E-07	-7.12465	7344.
5.0	20.00.209E-060.213E	010.101E	0958620.279	7.248	224.463	0.0160.721E-07	-7.14231	7322.
5.0	20.00.209E-060.213E	010.101E	0958620.295	7.248	233.410	0.0400.721E-07	-7.14231	7322.
5.0	20.00.209E-060.213E	010.101E	0958620.312	7.760	242.357	0.1000.771E-07	-7.11271	7359.
5.0	20.00.209E-060.213E	010.979E	0858620.329	7.549	0.	7.5490.771E-07	-7.11271	7359.
5.0	20.00.209E-060.213E	010.979E	0858620.346	7.549	9.210	7.4520.771E-07	-7.11271	7359.
5.0	20.00.209E-060.213E	010.979E	0858620.362	7.345	18.157	7.1740.750E-07	-7.12465	7344.
5.0	20.00.209E-060.213E	010.979E	0858620.379	7.052	27.104	6.7230.721E-07	-7.14231	7322.
5.0	20.00.209E-060.213E	010.979E	0858620.396	7.345	36.051	6.1100.750E-07	-7.12465	7344.
5.0	20.00.209E-060.213E	010.979E	0858620.412	7.145	44.598	5.3550.730E-07	-7.13665	7329.
5.0	20.00.209E-060.213E	010.979E	0858620.429	7.145	53.945	4.4850.730E-07	-7.13665	7329.
5.0	20.00.209E-060.213E	010.979E	0858620.446	7.145	63.155	3.5170.730E-07	-7.13665	7329.
5.0	20.00.209E-060.213E	010.979E	0858620.462	7.345	72.102	2.5730.750E-07	-7.12465	7344.
5.0	20.00.209E-060.213E	010.979E	0858620.479	7.052	81.049	1.7130.721E-07	-7.14231	7322.
5.0	20.00.209E-060.213E	010.979E	0858620.496	7.345	89.996	1.0200.750E-07	-7.12465	7344.
5.0	20.00.209E-060.213E	010.979E	0858620.512	7.345	98.943	0.5380.750E-07	-7.12465	7344.
5.0	20.00.209E-060.213E	010.979E	0858620.529	7.345	107.890	0.2530.750E-07	-7.12465	7344.
5.0	20.00.209E-060.213E	010.979E	0858620.545	7.345	116.837	0.1080.750E-07	-7.12465	7344.
5.0	20.00.209E-060.213E	010.979E	0858620.562	7.145	125.784	0.0440.730E-07	-7.13665	7329.
5.0	20.00.209E-060.213E	010.979E	0858620.579	7.145	134.731	0.0180.730E-07	-7.13665	7329.
5.0	20.00.209E-060.213E	010.979E	0858620.596	6.846	143.941	0.0070.700E-07	-7.15520	7306.
5.0	20.00.209E-060.213E	010.979E	0858620.612	7.052	152.888	0.0030.721E-07	-7.14231	7322.
5.0	20.00.209E-060.213E	010.979E	0858620.629	7.345	161.835	0.0020.750E-07	-7.12465	7344.
5.0	20.00.209E-060.213E	010.979E	0858620.646	7.385	170.781	0.0010.755E-07	-7.12226	7347.
5.0	20.00.209E-060.213E	010.979E	0858620.662	7.184	179.728	0.0010.734E-07	-7.13426	7332.
5.0	20.00.209E-060.213E	010.979E	0858620.679	7.184	188.675	0.0010.734E-07	-7.13426	7332.
5.0	20.00.209E-060.213E	010.979E	0858620.696	7.184	197.885	0.0020.734E-07	-7.13426	7332.
5.0	20.00.209E-060.213E	010.979E	0858620.712	7.184	206.832	0.0030.734E-07	-7.13426	7332.
5.0	20.00.209E-060.213E	010.979E	0858620.729	6.884	215.779	0.0070.703E-07	-7.15281	7309.
5.0	20.00.209E-060.213E	010.979E	0858620.746	6.884	224.726	0.0170.703E-07	-7.15281	7309.
5.0	20.00.209E-060.213E	010.979E	0858620.762	7.091	233.673	0.0410.725E-07	-7.13993	7325.
5.0	20.00.209E-060.213E	010.979E	0858620.779	7.385	242.620	0.1030.755E-07	-7.12226	7347.
5.0	20.00.209E-060.213E	010.979E	0858620.795	7.385	251.567	0.2410.755E-07	-7.12226	7347.
5.0	20.00.209E-060.213E	010.979E	0858620.812	7.385	260.514	0.5160.755E-07	-7.12226	7347.
5.0	20.00.209E-060.213E	010.979E	0858620.829	7.385	269.461	0.9840.755E-07	-7.12226	7347.
5.0	20.00.209E-060.213E	010.979E	0858620.846	7.385	278.671	1.6880.755E-07	-7.12226	7347.

5.0	20.00.209E-06	.213E	010.257E	1158619.301	7.549	0.	7.5490.293E-09	-9.53268	4334.
5.0	20.00.209E-060.213E		010.257E	1158619.317	8.753	8.947	7.4580.340E-09	-9.46842	4414.
5.0	20.00.209E-060.213E		010.257E	1158619.334	8.124	17.894	7.1850.316E-09	-9.50083	4374.
5.0	20.00.209E-060.213E		010.257E	1158619.351	7.025	27.104	6.7230.273E-09	-9.56394	4295.
5.0	20.00.209E-060.213E		010.257E	1158619.368	6.372	36.051	6.1100.248E-09	-9.60634	4242.
5.0	20.00.209E-060.213E		010.257E	1158619.384	5.564	44.998	5.3550.216E-09	-9.66523	4168.
5.0	20.00.209E-060.213E		010.257E	1158619.401	8.196	53.945	4.4850.318E-09	-9.49699	4379.
5.0	20.00.209E-060.213E		010.257E	1158619.417	8.431	62.892	3.5450.328E-09	-9.48470	4394.
5.0	20.00.209E-060.213E		010.257E	1158619.434	7.830	71.839	2.6000.304E-09	-9.51683	4354.
5.0	20.00.209E-060.213E		010.257E	1158619.451	7.025	81.049	1.7130.273E-09	-9.56394	4295.
5.0	20.00.209E-060.213E		010.257E	1158619.468	6.110	89.996	1.0200.237E-09	-9.62457	4219.
5.0	20.00.209E-060.213E		010.257E	1158619.484	5.347	98.943	0.5380.208E-09	-9.68246	4147.
5.0	20.00.209E-060.213E		010.257E	1158619.501	8.431	107.890	0.2530.328E-09	-9.48470	4394.
5.0	20.00.209E-060.213E		010.257E	1158619.518	8.124	116.837	0.1080.316E-09	-9.50083	4374.
5.0	20.00.209E-060.213E		010.257E	1158619.534	7.549	125.784	0.0440.293E-09	-9.53268	4334.
5.0	20.00.209E-060.213E		010.257E	1158619.551	6.780	134.731	0.0180.263E-09	-9.57934	4276.
5.0	20.00.209E-060.213E		010.257E	1158619.567	5.949	143.677	0.0070.231E-09	-9.63614	4205.
5.0	20.00.209E-060.213E		010.257E	1158619.584	5.752	152.624	0.0030.223E-09	-9.65077	4187.
5.0	20.00.209E-060.213E		010.257E	1158619.601	8.508	161.835	0.0020.331E-09	-9.48077	4399.
5.0	20.00.209E-060.213E		010.257E	1158619.618	8.124	170.781	0.0010.316E-09	-9.50083	4374.
5.0	20.00.209E-060.213E		010.257E	1158619.634	7.549	179.728	0.0010.293E-09	-9.53268	4334.
5.0	20.00.209E-060.213E		010.257E	1158619.651	6.547	188.675	0.0010.254E-09	-9.59458	4257.
5.0	20.00.209E-060.213E		010.257E	1158619.667	5.906	197.622	0.0020.229E-09	-9.63931	4201.
5.0	20.00.209E-060.213E		010.257E	1158619.684	6.780	206.569	0.0030.263E-09	-9.57934	4276.
5.0	20.00.209E-060.213E		010.257E	1158619.701	8.431	215.779	0.0070.328E-09	-9.48470	4394.
5.0	20.00.209E-060.213E		010.257E	1158619.718	7.830	224.726	0.0170.304E-09	-9.51683	4354.
5.0	20.00.209E-060.213E		010.257E	1158619.734	7.281	233.673	0.0410.283E-09	-9.54839	4315.
5.0	20.00.209E-060.213E		010.257E	1158619.751	6.547	242.620	0.1030.254E-09	-9.59458	4257.
5.0	20.00.209E-060.213E		010.257E	1158619.768	5.711	251.567	0.2410.222E-09	-9.65387	4183.
5.0	20.00.209E-060.213E		010.257E	1158619.784	7.830	260.514	0.5160.304E-09	-9.51683	4354.
5.0	20.00.209E-060.213E		010.257E	1158619.801	8.431	269.461	0.9840.328E-09	-9.48470	4394.
5.0	20.00.209E-060.213E		010.257E	1158619.817	7.830	278.408	1.6650.304E-09	-9.51683	4354.
5.0	20.00.209E-060.213E		010.257E	1158619.834	7.549	287.355	2.5170.293E-09	-9.53268	4334.
5.0	20.00.209E-060.213E		010.257E	1158619.851	6.323	296.565	3.4870.246E-09	-9.60966	4238.
5.0	20.00.209E-060.213E		010.257E	1158619.868	5.525	305.512	4.4300.215E-09	-9.66826	4165.
5.0	20.00.209E-060.213E		010.257E	1158619.884	8.124	314.459	5.3050.316E-09	-9.50083	4374.
5.0	20.00.209E-060.213E		010.257E	1158619.901	8.753	323.406	6.0680.340E-09	-9.46842	4414.
5.0	20.00.209E-060.213E		010.257E	1158619.917	7.830	332.353	6.6900.304E-09	-9.51683	4354.
5.0	20.00.209E-060.213E		010.257E	1158619.934	7.025	341.300	7.1520.273E-09	-9.56394	4295.
5.0	20.00.209E-060.213E		010.257E	1158619.951	6.110	350.510	7.4460.237E-09	-9.62457	4219.
5.0	20.00.209E-060.213E		010.257E	1158619.968	5.347	359.457	7.5490.208E-09	-9.68246	4147.
5.0	20.00.209E-060.213E		010.257E	1158619.984	8.431	368.404	7.4680.328E-09	-9.48470	4394.
5.0	20.00.209E-060.213E		010.257E	1158620.001	8.124	377.351	7.2070.316E-09	-9.50083	4374.
5.0	20.00.209E-060.213E		010.257E	1158620.018	7.614	386.298	6.7700.296E-09	-9.52899	4339.
5.0	20.00.209E-060.213E		010.257E	1158620.034	6.835	395.245	6.1710.266E-09	-9.57587	4280.
5.0	20.00.209E-060.213E		010.257E	1158620.051	6.156	404.192	5.4280.239E-09	-9.62132	4223.
5.0	20.00.209E-060.213E		010.318E	1158620.067	7.549	0.	7.5490.237E-09	-9.62457	4219.
5.0	20.00.209E-060.213E		010.318E	1158620.084	11.668	8.947	7.4580.367E-09	-9.43549	4456.
5.0	20.00.209E-060.213E		010.318E	1158620.101	10.816	18.157	7.1740.340E-09	-9.46842	4414.
5.0	20.00.209E-060.213E		010.318E	1158620.118	8.997	27.104	6.7230.283E-09	-9.54839	4315.
5.0	20.00.209E-060.213E		010.318E	1158620.134	8.089	36.051	6.1100.254E-09	-9.59458	4257.
5.0	20.00.209E-060.213E		010.318E	1158620.151	7.057	44.998	5.3550.222E-09	-9.65387	4183.
5.0	20.00.209E-060.213E		010.318E	1158620.167	8.680	53.945	4.4850.273E-09	-9.56394	4295.
5.0	20.00.209E-060.213E		010.318E	1158620.184	10.418	62.892	3.5450.328E-09	-9.48470	4394.
5.0	20.00.209E-060.213E		010.318E	1158620.201	10.038	72.102	2.5730.316E-09	-9.50083	4374.
5.0	20.00.209E-060.213E		010.318E	1158620.218	8.997	81.049	1.7130.283E-09	-9.54839	4315.
5.0	20.00.209E-060.213E		010.318E	1158620.234	7.813	89.996	1.0200.246E-09	-9.60966	4233.
5.0	20.00.209E-060.213E		010.318E	1158620.251	7.057	98.943	0.5380.222E-09	-9.65387	4183.
5.0	20.00.209E-060.213E		010.318E	1158620.268	9.675	107.890	0.2530.304E-09	-9.51683	4354.
5.0	20.00.209E-060.213E		010.318E	1158620.284	10.416	116.837	0.1080.328E-09	-9.48470	4394.

SAMPLE PLOTS
FROM
SELECTED PASSES

DENSITY PLOT

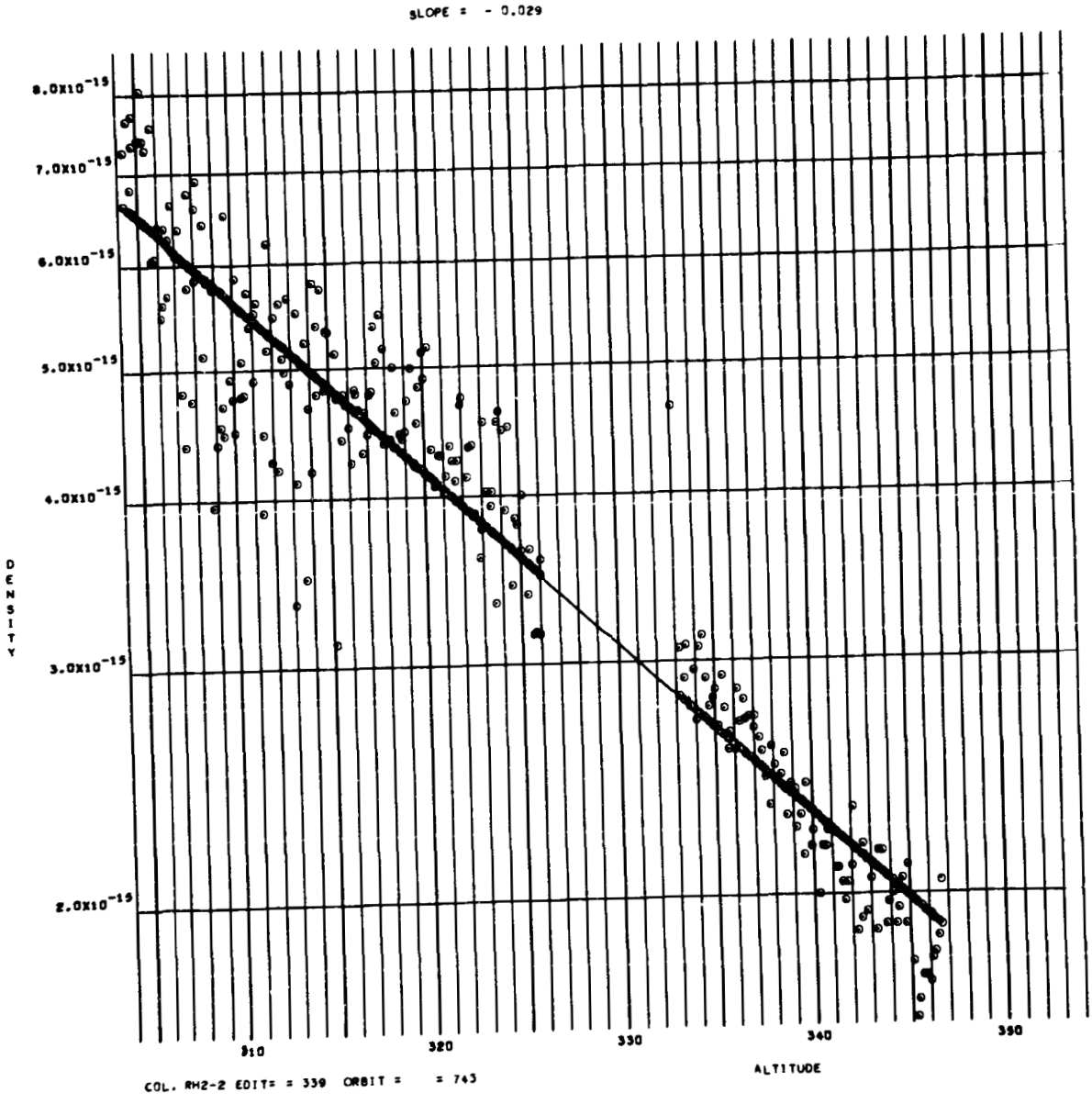

DENSITY PLOT

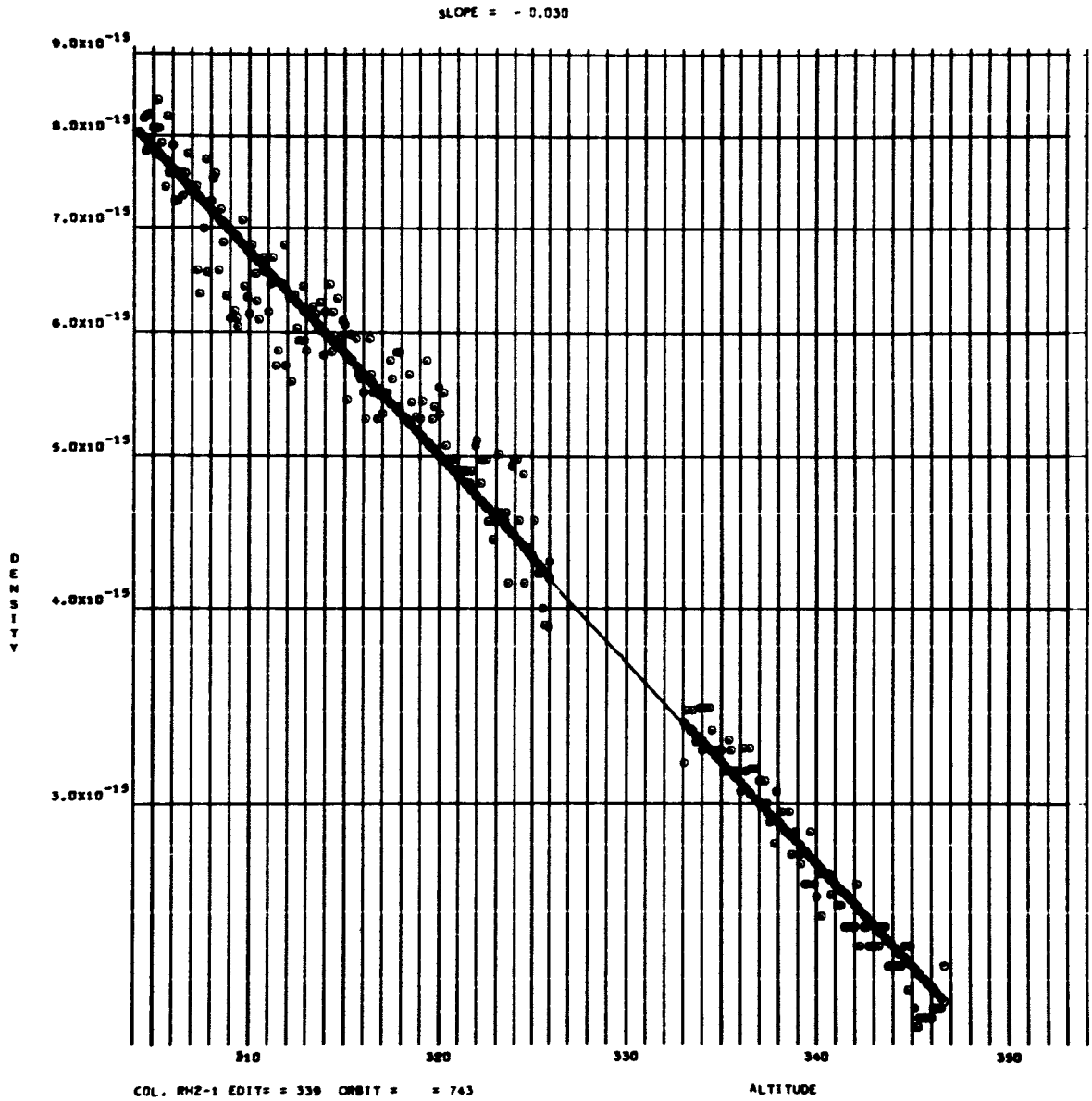

DENSITY PLOT

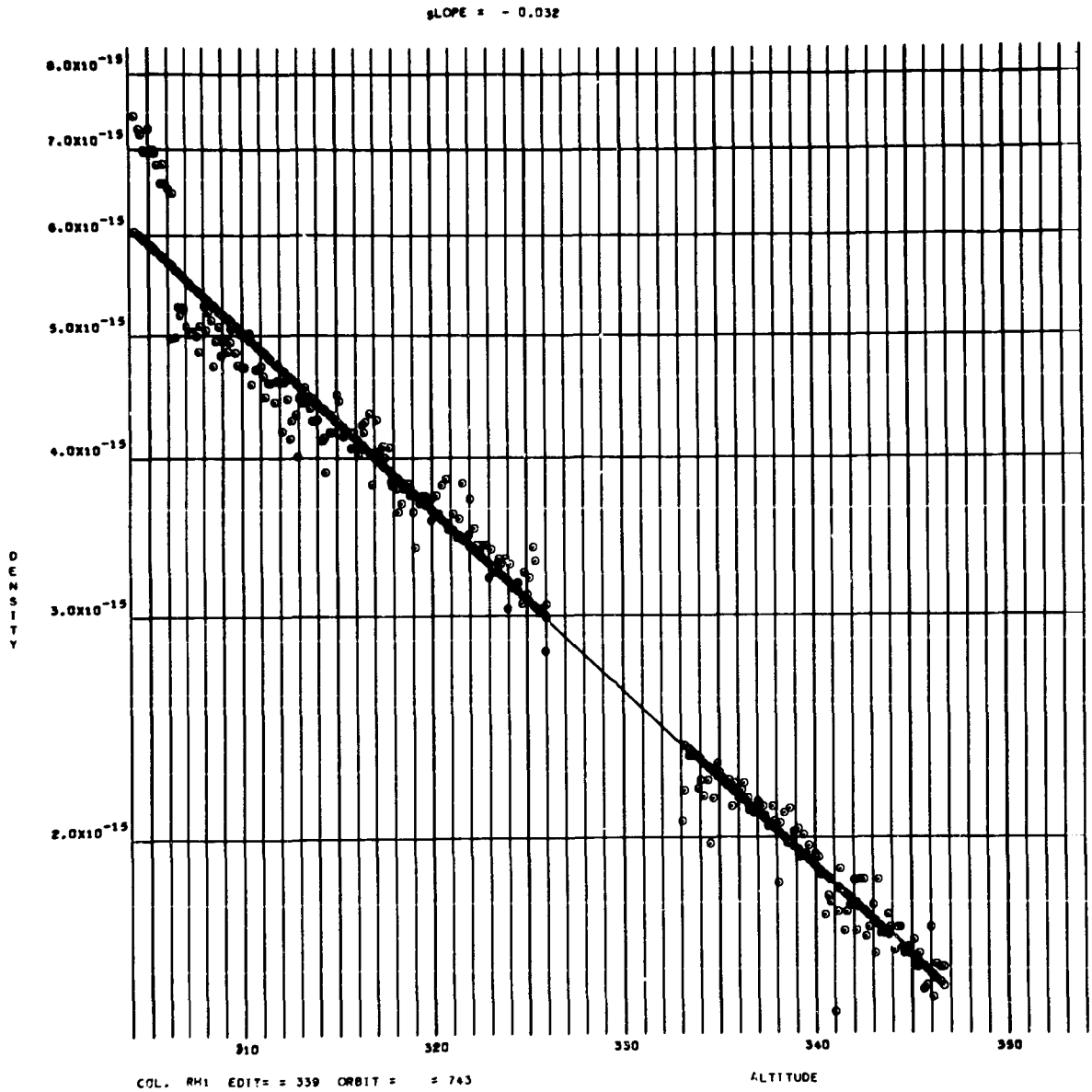

RAW PRESSURE PLOT

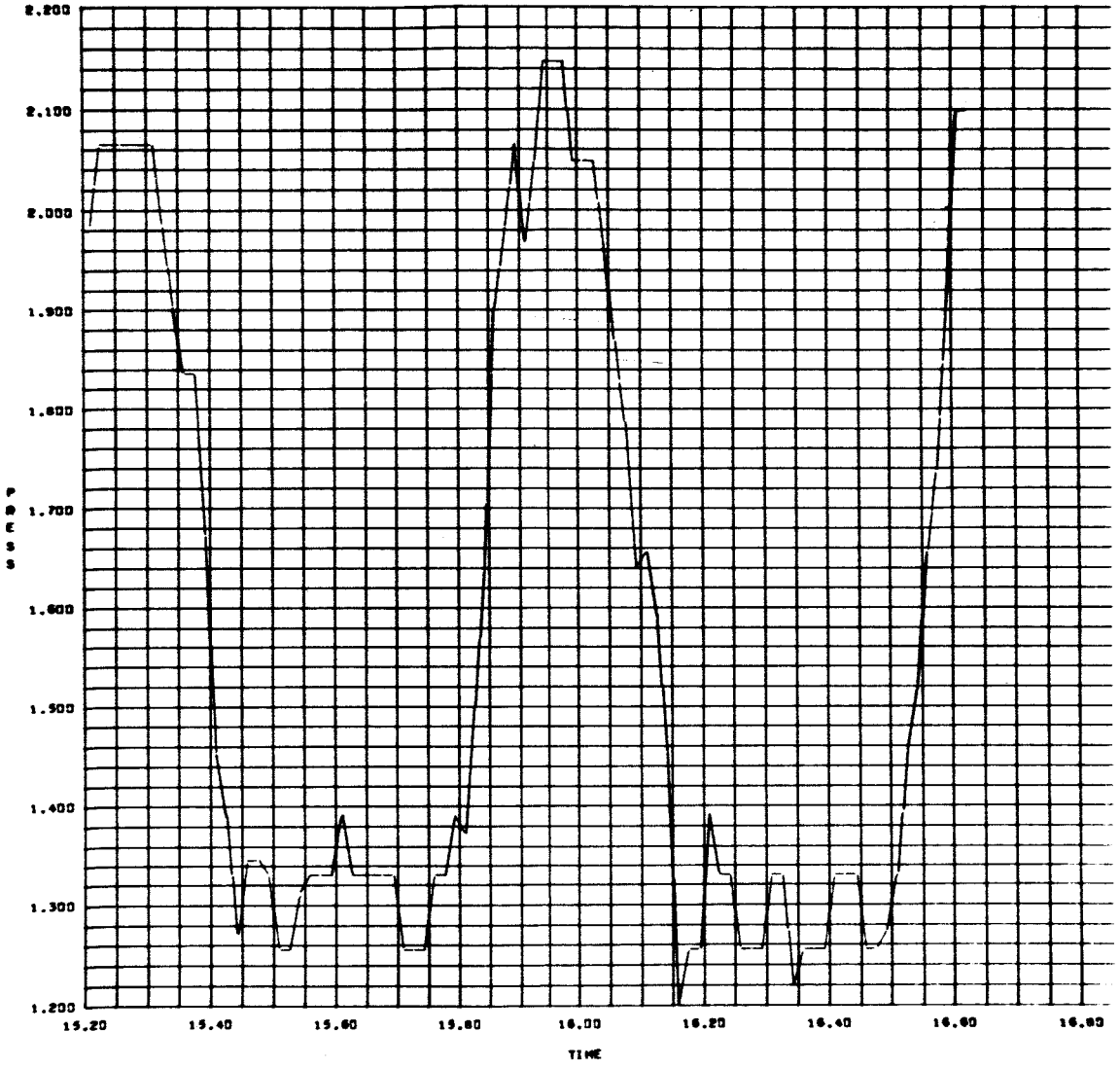

QUI. BA2 ORBIT - 877 PRESSURE MIN -.610E-7 64015

RAW PRESSURE PLOT

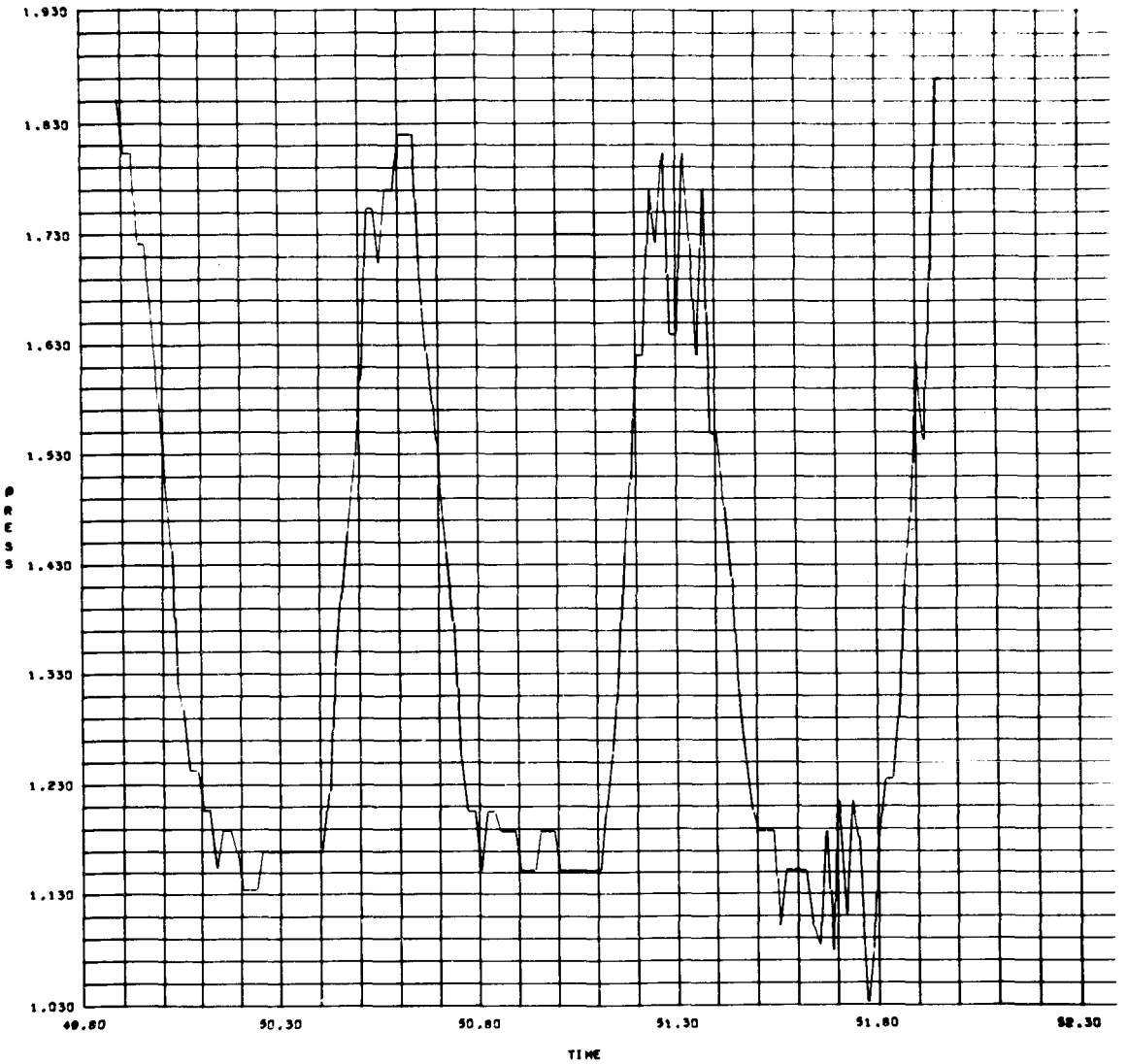

QUI. BA2 ORBIT • 877 PRESSURE MIN •.610E-7 64015

RAW PRESSURE PLOT

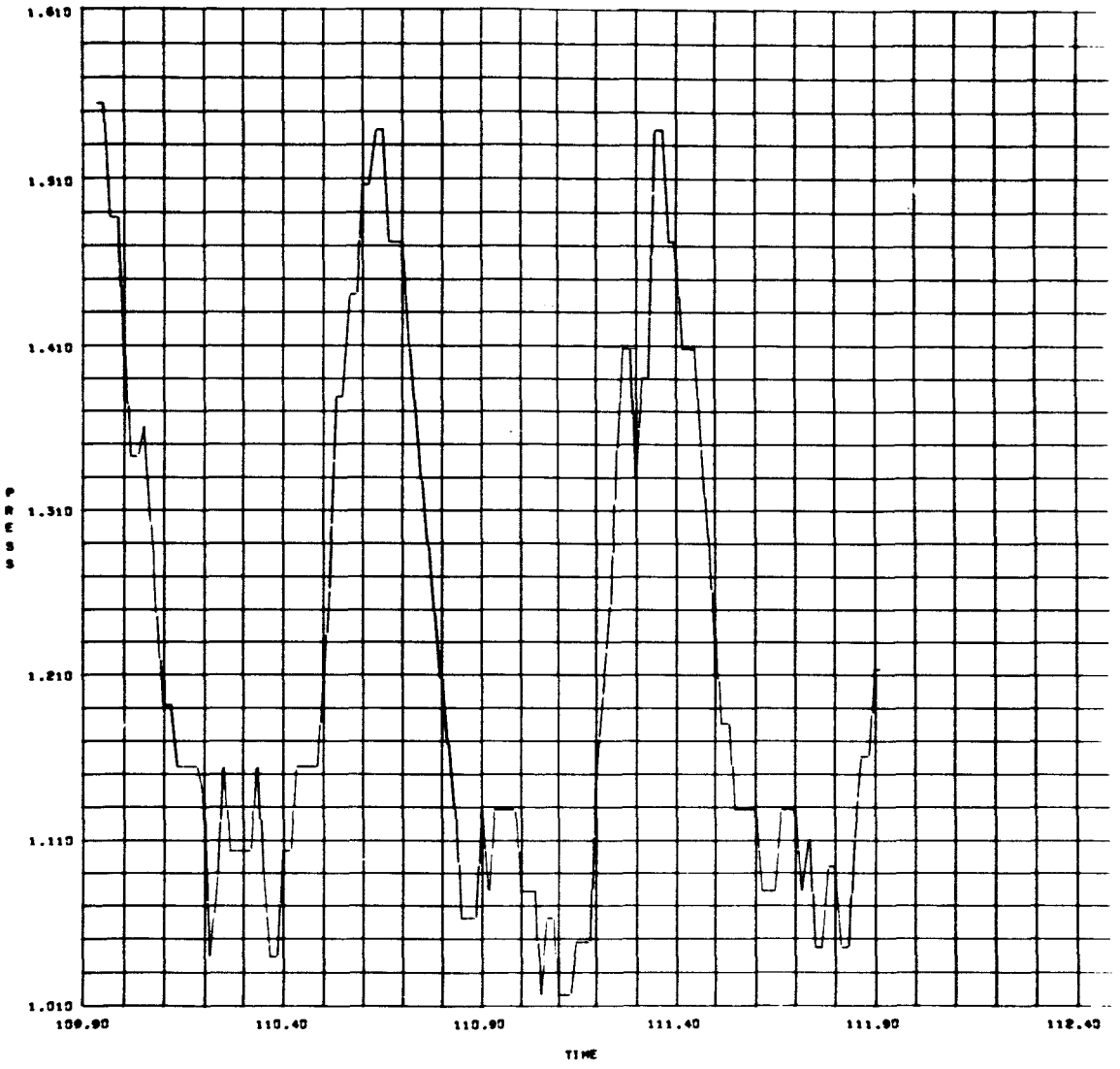

DUI. BA2 ORBIT • 877 PRESSURE MIN •.610E-7 64015

PNORM-VPOFS PLOT

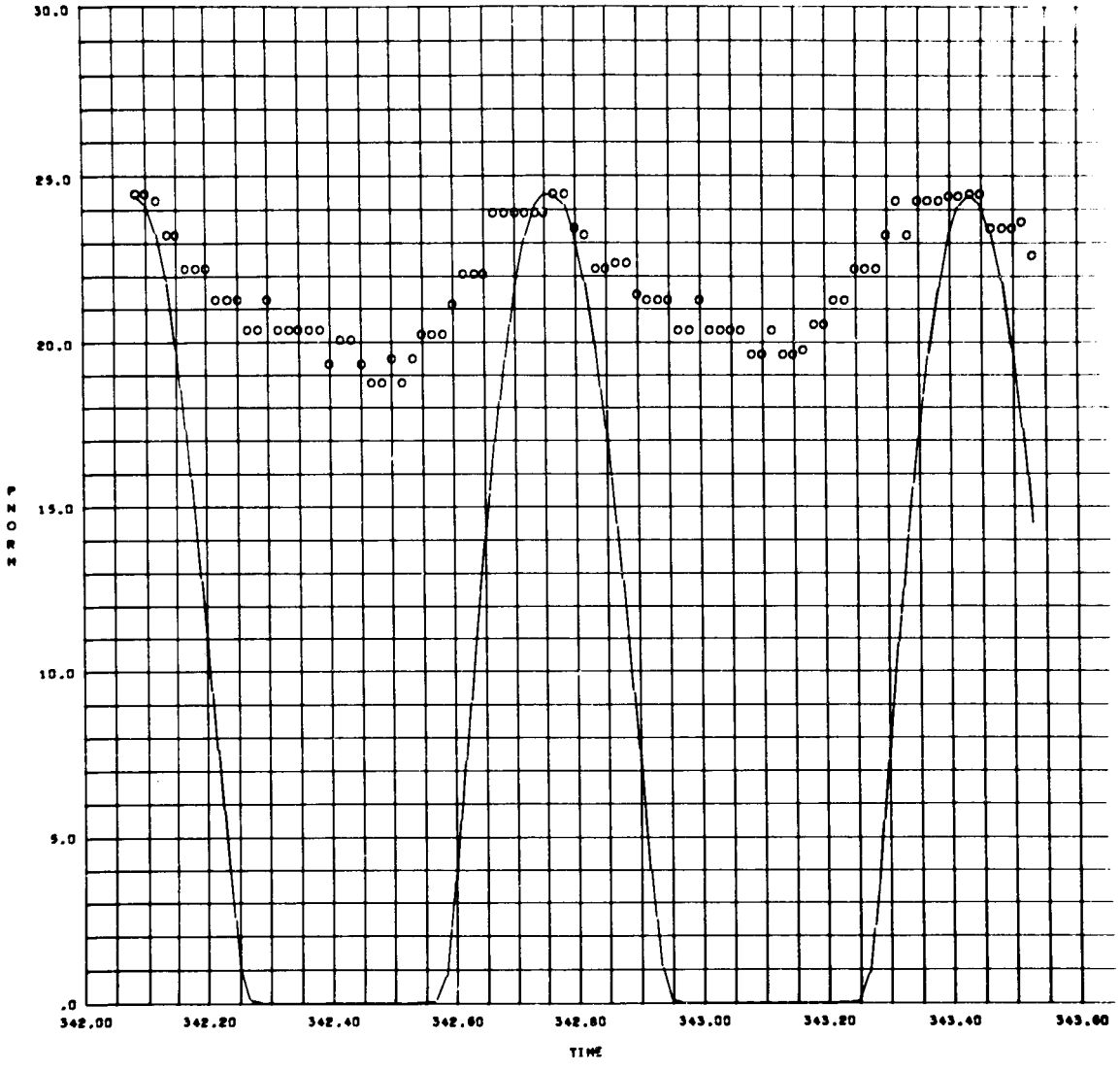

QUI.. BA2 ORBIT •1300 VPOFS •LINE PNORM•CIRCLE 00001

PNORM-VPOFS PLOT

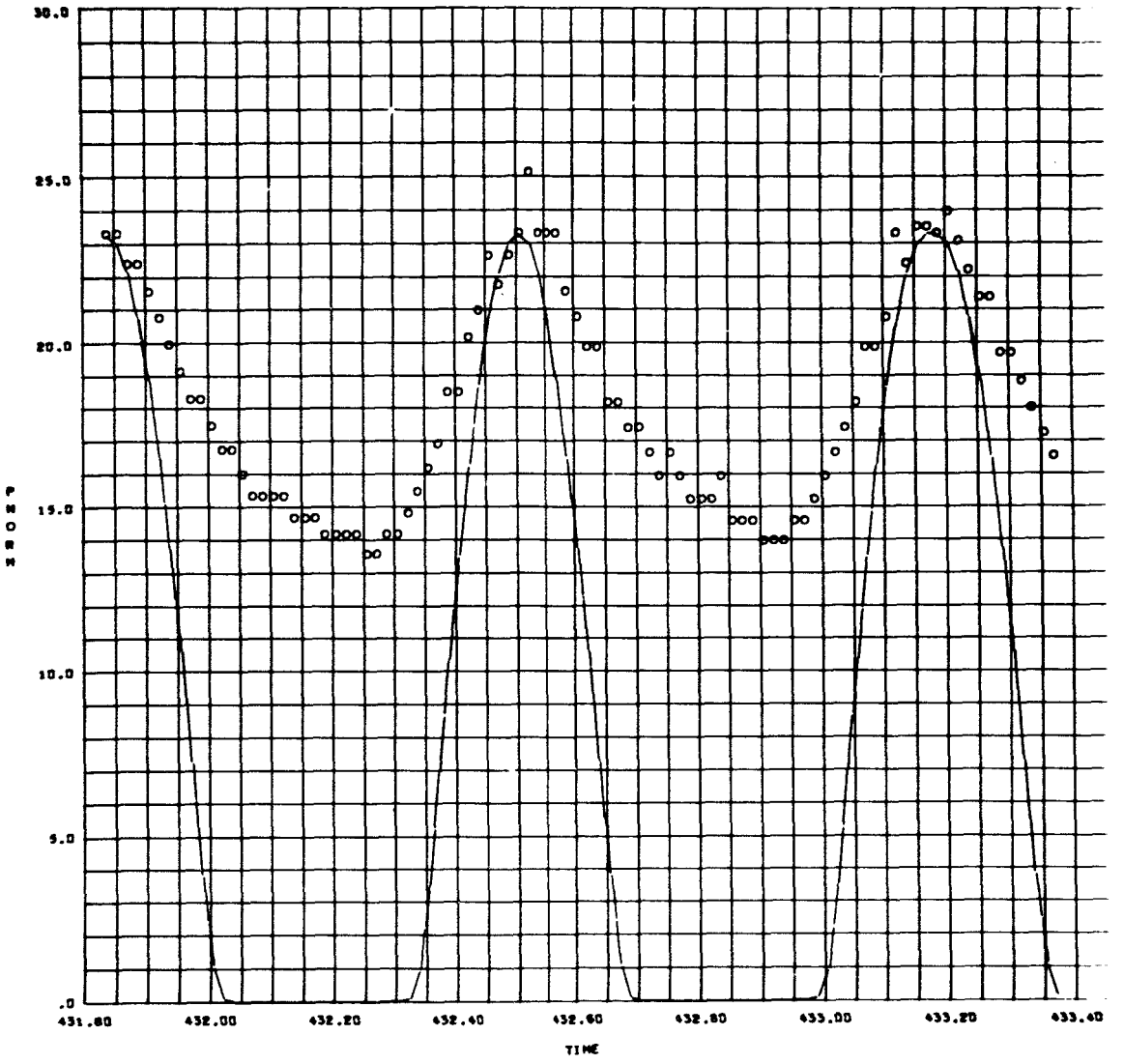

QUI. BA2 ORBIT -1300 VPOFS -LINE PNORM-CIRCLE 00001

PNORM-VPOFS PLOT

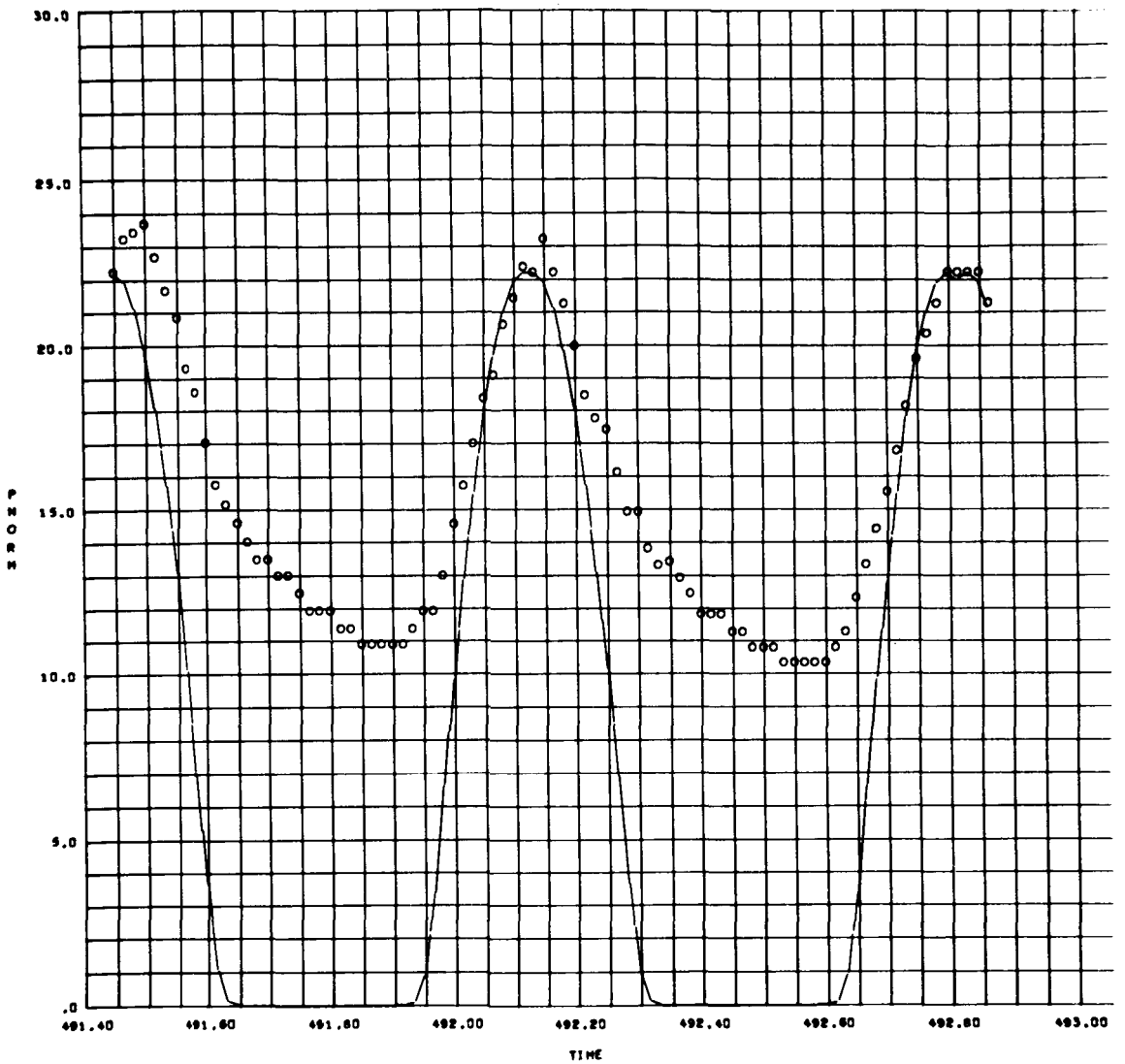

QUI. BA2 ORBIT -1300 VPOFS -LINE PNORM-CIRCLE 00001

FORTRAN II LISTING (PDP)

```
*       CHARLES J HANLEY     ROOM  22      BUILDING 11
*       PAUSE
*       XEQ
*       CARDS COLUMN
*       LIST 8
*       FORMAP
*       LABEL
C CJH
C       PRESSURE GAUGES DC OUTPUT VOLTAGES CONVERTED TO
C       CORRECTED ION CURRENT
        DIMENSION A(8),B(255),BV(18),BI(18),BV2(18),BI2(18),VC(8),RI(8),
       1VC2(8),RI2(8),ELN(18),RIC(8),R2C(8),BV1(18),VC1(8),R1C(8),C(21),
       2D(21),RSCX(4 ),RSX(4 ),RS1(4 ),RS2(4 ),RSC1(4 ),RSC2(4 ),P(21),T(2
       31),BA1(90,4),BA2(90,4),RED1(90,5),RED2(90,5),E(209),F(142)
       1            , XTIME(30),XALT(30),XLAT(30),XLONG(30),XLST(30),XRBA1(3
       10),XRBA2(30),XRRH1(30),     XRRH2(30)
        COMMON BI,BV1,BV2,VC1,VC2,RI,RI2,XHF,XMF,XLF,X2HF,X2MF,X2LF,XHL,
       1XML,XLL,X2HL,X2ML,X2LL,NEDI,NORB
       1       ,XTIME,XALT,XLAT,XLONG,XLST,XRBA1,XRBA2,XRRH1,XRRH2
        NRZA = 0
8888    READ 970,NEDI,NORB
        IF(NEDI)9981,960,9981
9981    IF(NRZA)964,8889,964
8889    CALL MATCH(NEDI,NED)
        IF(NED-1)8891,964,8891
8891    IF(NRZA)964,8890,964
964     PRINT 986
        PAUSE 7777
        CALL MATCH(NEDI,NED)
        IF(NED-1)8890,8888,8890
8890    READ TAPE 15,A
        READ TAPE 5,E
        CALL DEN
        WRITE OUTPUT TAPE  6,9999,NEDI,NORB
        WRITE OUTPUT TAPE 16,9999,NEDI,NORB
        WRITE OUTPUT TAPE 25,9999,NEDI,NORB
        WRITE OUTPUT TAPE 26,9999,NEDI,NORB
9999    FORMAT(90X6HEDIT =I4,10X7HORBIT =I4)
        NREC=E(209)
        DO 1100 JA=1,NREC
        READ TAPE 5,F
        XTIME(JA)=F(3)
        XALT(JA)=F(12)
        XLAT(JA)=F(11)
        XLONG(JA)=F(10)
        XLST(JA)=F(13)
```

```
      XRBA1(JA)=F(61)
      XRBA2(JA)=F(64)
      XRRH1(JA)=F(73)
      XRRH2(JA)=F(76)
1100  CONTINUE
      NOX = 0
      NNXZ = NREC +1
5021  IF(NNXZ-NOX)5022,5022,5020
5020  NOX = NOX +1
      BACKSPACE 5
      GO TO 5021
5022  IF(A(8)-60000004.)2,3,2
C     PRINT ERROR MESSAGE - WRONG TAPE
    2 PRINT 200
      GO TO 8888
    3 A(4)=A(4)+60.
      WRITE OUTPUT TAPE 3,600,A(1),NFDI,NORB,A(2),A(3),A(4),A(5),A(6),A(
     18)
      IF(SENSE SWITCH 2)3038,3036
 3036 SENSOR=1.0
      CALL PAGE(SENSOR)
 3038 READ TAPE 15,B
      B(2)=B(2)/1000.
      JHRSMN=B(2)/3600.
      HRSEC=3600*JHRSMN
      RSEC=B(2)-HRSEC
      MSECMN=RSEC/60.
      XBB =MSECMN*60
      RSEC1M=RSEC-XBB
      BACKSPACE 15
      WRITE OUTPUT TAPE 3,12121,JHRSMN,MSECMN,RSEC1M
C     READ INPUT CURRENT TABLE FORMAT 202
      READ 202,BI
961   DO 4 I=1,18
      FLN(I)=LOGF(BI(I))
    4 CONTINUE
C     READ REDHEAD CALIBRATION VOLTAGES AND CURRENTS FOR REDHEAD 1 AND 2
      READ 300,VC1,VC2
      READ 303,RI,RI2
      READ 305,XHL,XML,XLL,X2HL,X2ML,X2LL
      READ 203,TO,TI,WO,WI,HID
      READ 305,XHF,XMF,XLF,X2HF,X2MF,X2LF
C     READ BAYARD ALPERT 1 CALIBRATION VOLTAGES BY FORMAT 204
      READ 204,BV1
C     READ BAYARD ALPERT 2 CALIBRATION VOLTAGES BY FORMAT 204
      READ 204,BV2
```

```
      AFTA1=19.5
      AFTA2=23.9
B     HID=472424000000
      IPLOT=1
      TIME1=0.0
      TIME2=0.0
      TIME3=0.0
      TIME4=0.0
      ICNT=1
      JCNT=1
      KCNT=1
      JPLOT=1
      KPLOT=1
      WRITE OUTPUT TAPE 3,12222,BV1
      WRITE OUTPUT TAPE 3,13333,BV2
      WRITE OUTPUT TAPE 3,14444
      WRITE OUTPUT TAPE 3,219
      WRITE OUTPUT TAPE 3,15555,XHF,XMF,XLF,X2HF,X2MF,X2LF
      WRITE OUTPUT TAPE 3,20969,TO,TI,WO,WI
      WRITE OUTPUT TAPE 3,99570,AFTA1,AFTA2
      READ TAPE 5,F
      READ TAPE 5,F
      IF(F(133)-0.0)242,240,242
  240 WRITE OUTPUT TAPE 3,949
242   BACKSPACE 5
      BACKSPACE 5
      IF(SENSE SWITCH 2)4044,4404
 4404 WRITE OUTPUT TAPE 3,699
      GO TO 6111
 4044 WRITE OUTPUT TAPE 3,700
      IF(SENSE SWITCH 1)711,722
  722 WRITE OUTPUT TAPE 3,900
      GO TO 6111
  711 WRITE OUTPUT TAPE 3,800
 6111 X=1.
      DO 30 M=1,8
      RIC(M)=LOGF(RI(M))
   30 CONTINUE
      DO 95 M=1,8
      R2C(M)=LOGF(RI2(M))
   95 CONTINUE
      DCON=SQRTF((2.0*83150000.*TI)/WI)
      VPI=DCON
      VPO=SQRTF((2.0*83150000.*TO)/WO)*1.0E-05
      CON=.05/48.
      XCNT=0.
```

```
      XSPIN=0.
      IX=1
      JX=1
      II=1
      MM=1
      READ TAPE 5,F
      IDAY=F(203)
      IMON=F(202)
      READ TAPE 5,F
      XCNT=XCNT+1.
 9992 READ TAPE 15,B
      B(2)=B(2)/1000.
      IF(B(2)-F(132))9992,2999,2999
 2999 IF(B(2)-(F(132)+21.0))2299,2299,1199
 1199 READ TAPE 5,F
      XCNT=XCNT+1.
      GO TO 2999
 2299 TSPIN=B(2)+.667
      BACKSPACE 15
  100 READ TAPE 15,B
      DO 52 K=1,10
      L=25*(K-1)
      DO 8282 J=1,25
      I=J+L
      B(J)=B(I)
 8282 CONTINUE
      IF(B(1)-99999999.)5252,106,5252
 5252 J=3
      B(2)=B(2)/1000.
      IF(B(2)-TSPIN)3415,5143,5143
 5143 CSPIN=B(2)
      IF((CSPIN-XB2)-.7)141,140,140
141   IF((CSPIN-XB2)-.1)3415,70713,70713
  140 IF(JX-1)70713,112,70713
 3415 DO 2345 I=1,18
      BV(I)=BV1(I)
 2345 CONTINUE
      I=1
      T(3)=B(2)+CON*(3.)
      T(4)=B(2)+CON*19.
      T(5)=B(2)+CON*35.
   29 IF(J-6)7,8,7
    7 IF(B(J)-BV(I))6,11,12
   12 I=I+1
      IF(I-19)7,14,14
   14 I=1
```

```
      C(J)=00.00
      P(J)=00.00
      J=J+1
      IF(J-12)29,25,29
    6 IF(I-1)9,88,9
   88 C(J)=00.00
      P(J)=00.00
      J=J+1
      I=1
      IF(J-12)29,25,29
    9 CLN=FLN(I-1)+((B(J)-BV(I-1))/(BV(I)-BV(I-1)))*(ELN(I)-FLN(I-1))
      GO TO 15
   11 CLN=FLN(I)
   15 XION=EXPF(CLN)
      C(J)=XION
      J=J+1
      I=1
      IF(J-12)29,25,29
C     START OF BAYARD ALPERT 2 COMPUTATION
    8 DO 20 I=1,18
      BV(I)=BV2(I)+.075
   20 CONTINUE
      T(9)=B(2)+CON*5.
      T(10)=B(2)+CON*21.
      T(11)=B(2)+CON*37.
      J=9
      I=1
      IF(J-12)7,25,7
C     START OF REDHEAD COMPUTATIONS
   25 DVC=(XHL-XHF+XML-XMF+XLL-XLF)/3.0
      T(15)=B(2)+CON*10.
      T(16)=B(2)+CON*26.
      T(17)=B(2)+CON*42.
      DO 5432 M=1,8
      VC(M)=VC1(M)
 5432 CONTINUE
      DO 5324 M=1,6
      RIC(M)=P1C(M)
 5324 CONTINUE
      J=15
      M=1
   35 IF(J-18)41,42,41
   41 IF(J-21)51,77,51
   51 D(J)=B(J)+DVC
      IF(D(J)-VC(M))61,71,72
   72 M=M+1
```

```
      IF(M-9)51,75,75
   75 M=1
      C(J)=00.00
      D(J)=00.00
      P(J)=00.00
      J=J+1
      GO TO 35
   71 CRN=RIC(M)
      D(J)=B(J)
      GO TO 80
   61 IF(M-1)6262,99,6262
   99 C(J)=00.00
      D(J)=00.00
      J=J+1
      M=1
      GO TO 35
 6262 CRN=RIC(M-1)+((D(J)-VC(M-1))/(VC(M)-VC(M-1)))*(RIC(M)-RIC(M-1))
   80 XION=EXPF(CRN)
      C(J)=XION
      J=J+1
      M=1
      GO TO 35
C     START OF REDHEAD 2 COMPUTATIONS
   42 DO 91 M=1,8
      VC(M)=VC2(M)
   91 CONTINUE
      DO 222 M=1,8
      RIC(M)=R2C(M)
  222 CONTINUE
      T(18)=B(2)+CON*11.
      T(19)=B(2)+CON*27.
      T(20)=B(2)+CON*43.
      DVC=(X2HL-X2HF+X2ML-X2MF+X2LL-X2LF)/3.0
      J=18
      M=1
      GO TO 41
C          START OF REDHEAD COMPUTATION FOR PRESSURE
   77 DO 1234 J=15,17
      IF(C(J)-1.0E-09)789,987,987
  789 SRSX=10.
      SRSXA=0.
      GO TO 4047
  987 IF(C(J)-1.0E-08)2332,2332,1117
 2332 SRSX=7.22
      SRSXA=.60E-10
      GO TO 4047
```

```
1117 IF(C(J)-1.01E-08)2332,2227,2   7
2227 IF(C(J)-1.0E-07)3337,3337,4447
3337 SRSX=9.3
     SRSXA=.42E-09
     GO TO 4047
4447 IF(C(J)-1.01E-07)3337,5557,5557
5557 IF(C(J)-1.0E-06)6667,6667,8887
6667 SRSX=13.9
     SRSXA=.45E-08
     GO TO 4047
8887 IF(C(J)-1.01E-06)6667,9997,9997
9997 IF(C(J)-2.8E-06)2027,2027,3037
2027 SRSX=16.9
     SRSXA=.34E-07
     GO TO 4047
3037 IF(C(J)-2.81E-06)2027,2727,2727
2727 IF(C(J)-1.0E-05)2828,2828,3838
2828 SRSX=10.8
     SRSXA=-.59E-07
     GO TO 4047
3838 SRSX=10.
     SRSXA=0.
4047 P(J)=(C(J)/SRSX)+SRSXA
     RED1(II,1)=T(J)
     RED1(II,2)=B(J)
     RED1(II,3)=D(J)
     RED1(II,4)=C(J)
     RED1(II,5)=P(J)
     II=II+1
1234 CONTINUE
     DO 4321 J=18,20
     IF(C(J)-1.0E-09)7111,7222,7222
7111 SRSX=10.
     SRSXA=0.
     GO TO 7808
7222 IF(C(J)-1.0E-08)7333,7333,7444
7333 SRSX=4.72
     SRSXA=.61E-10
     GO TO 7808
7444 IF(C(J)-1.01E-08)7333,7555,7555
7555 IF(C(J)-1.0E-07)7666,7666,7888
7666 SRSX=6.22
     SRSXA=.23E-09
     GO TO 7808
7888 IF(C(J)-1.01E-07)7666,7101,7101
7101 IF(C(J)-1.0E-06)7202,7202,7303
```

```
 7202 SRSX=8.66
      SRSXA=.24E-08
      GO TO 7808
 7303 IF(C(J)-1.01E-06)7202,7404,7404
 7404 IF(C(J)-2.8E-06)7505,7505,7606
 7505 SRSX=11.8
      SRSXA=.23E-07
      GO TO 7808
 7606 IF(C(J)-2.81E-06)7505,7005,7005
 7005 IF(C(J)-1.0E-05)7025,7025,7035
 7025 SRSX=11.8
      SRSXA=.23E-07
      GO TO 7808
 7035 SRSX=10.
      SRSXA=0.
 7808 P(J)=(C(J)/SRSX)+SRSXA
      RED2(MM,1)=T(J)
      RED2(MM,2)=B(J)
      RED2(MM,3)=D(J)
      RED2(MM,4)=C(J)
      RED2(MM,5)=P(J)
      MM=MM+1
 4321 CONTINUE
C      START  OF  BAYARD ALPERT 1  PRESSURE COMPUTATION
      JK=21
  444 IF(B(JK)-15.0)212,232,212
  232 EM1=B(JK+2)
  323 JK=JK+25
      IF(JK-271)121,131,121
  131 GO TO 433
  121 IF(B(JK)-0.)323,322,323
  322 EM2=B(JK+2)
      GO TO 433
  212 IF(B(JK)-0.)411,404,411
  404 EM2=B(JK+2)
  661 JK=JK+25
      IF(JK-271)626,433,626
  626 IF(B(JK)-15.0)661,636,661
  636 EM1=B(JK+2)
      GO TO 433
  411 JK=JK+25
      IF(JK-271)444,555,444
  555 IF(X-1.)433,422,433
  422 EM1=-0.
      EM2=-0.
      X=X+1.
```

```
  433 SEN1=(1.0/97.5)*EM1
      SEN2=(1.0/119.5)*EM2
      X=X+1.
      DO 5445 J=3,5
      P(J)=C(J)/SEN1
      BA1(IX,1)=T(J)
      BA1(IX,2)=B(J)
      BA1(IX,3)=C(J)
      BA1(IX,4)=P(J)
      IX=IX+1
 5445 CONTINUE
      DO 4554 J=9,11
      P(J)=C(J)/SEN2
      BA2(JX,1)=T(J)
      BA2(JX,2)=B(J)
      BA2(JX,3)=C(J)
      BA2(JX,4)=P(J)
      JX=JX+1
 4554 CONTINUE
      XB2=B(2)
      IF(SENSE SWITCH 2)70712,70713
70712 IF(SENSE SWITCH 1)654,456
  654 WRITE OUTPUT TAPE 3,400,B(2),B(3),C(3),B(9),C(9),B(15),D(15),C(15)
     1,B(18),D(18),C(18)
      WRITE OUTPUT TAPE 3,500,B(4),C(4),B(10),C(10),B(16),D(16),C(16),
     1B(19),D(19),C(19)
      WRITE OUTPUT TAPE 3,500,B(5),C(5),B(11),C(11),B(17),D(17),C(17),
     1B(20),D(20),C(20)
      GO TO 52
  456 WRITE OUTPUT TAPE 3,1000,T(3),B(3),C(3),P(3),T(9),B(9),C(9),P(9)
      WRITE OUTPUT TAPE 3,1009,T(15),B(15),D(15),C(15),P(15),T(18),B(18)
     1,D(18),C(18),P(18)
      WRITE OUTPUT TAPE 3,1000,T(4),B(4),C(4),P(4),T(10),B(10),C(10),P(1
     10)
      WRITE OUTPUT TAPE 3,1009,T(16),B(16),D(16),C(16),P(16),T(19),B(19)
     1,D(19),C(19),P(19)
      WRITE OUTPUT TAPE 3,1000,T(5),B(5),C(5),P(5),T(11),B(11),C(11),P(1
     11)
      WRITE OUTPUT TAPE 3,1009,T(17),B(17),D(17),C(17),P(17),T(20),B(20)
     1,D(20),C(20),P(20)
      IX=1
      JX=1
      II=1
      MM=1
      GO TO 52
70713 IF(B(2) -TSPIN) 52,128,128
```

```
  128 IF(JX-2)112,112,113
  113 PMIN1=BA1(1,4)
      PMAX1=BA1(1,4)
      IX=IX-1
      DO 7771 IXX=1,IX
      IF(PMIN1-BA1(IXX,4))7772,7773,7773
 7773 PMIN1=BA1(IXX,4)
      TMIN1=BA1(IXX,1)
      BMIN1=BA1(IXX,2)
      CMIN1=BA1(IXX,3)
      LMIN1=IXX
 7772 IF(PMAX1-BA1(IXX,4))7774,7774,7771
 7774 PMAX1=BA1(IXX,4)
      TMAX1=BA1(IXX,1)
      BMAX1=BA1(IXX,2)
      CMAX1=BA1(IXX,3)
      LMAX1=IXX
 7771 CONTINUE
      IF(LMIN1-IX)449,450,450
  449 LMIN1=LMIN1+1
      PMIN1=BA1(LMIN1,4)
      TMIN1=BA1(LMIN1,1)
      BMIN1=BA1(LMIN1,2)
      CMIN1=BA1(LMIN1,3)
  450 IF(LMAX1-1)452,452,451
  451 LMAX1=LMAX1-1
      PMAX1=BA1(LMAX1,4)
      TMAX1=BA1(LMAX1,1)
      BMAX1=BA1(LMAX1,2)
      CMAX1=BA1(LMAX1,3)
  452 DELP1=PMAX1-PMIN1
      XCON=.667
      TBX1=F(60)+XSPIN*XCON
64483 IF(ABSF(TMAX1-TBX1)-.335)645,19065,19065
19065 IF(TMAX1-TBX1)1300,1301,1302
 1300 TBX1=TBX1-.667
      GO TO 64483
 1301 GO TO 645
 1302 TBX1=TBX1+.667
      GO TO 64483
  645 TBN1=F(87)+XSPIN*XCON
63092 IF(ABSF(TMIN1-TBN1)-.335)36332,71363,71363
71363 IF(TMIN1-TBN1)3100,3101,3102
 3100 TBN1=TBN1-.667
      GO TO 63092
 3101 GO TO 36332
```

```
 3102 TBN1=TBN1+.667
      GO TO 63092
36332 SXBA1=F(61)/VPO
      SNBA1=F(88)/VPO
      S=SXBA1
      CALL FOS(S,FS)
      FSX=FS
      S=SNBA1
      CALL FOS(S,FS)
      FSN=FS
      IF(SXBA1-0.)10480,15011,15011
15011 IF(SXBA1-1.)81647,81647,91647
91647 IF(SNBA1-1.)69179,14194,14194
14194 DB101=((PMAX1*1333.)/(177245.39*VPI*F(61)))
      DB102=((DELP1*1333.)/(177245.39*VPI*2.0*(F(61)-F(108))))
      GO TO 36207
69179 DB101=((PMAX1*1333.)/(177245.39*VPI*F(61)))
      DB102=((DELP1*WO*1333.)/(83150000.*(SQRTF(TO*TI))*(FSX-FSN)))
      GO TO 36207
81647 DB101=0.
      DB102=((DELP1*WO*1333.)/(83150000.*(SQRTF(TO*TI))*(FSX-FSN)))
      GO TO 36207
10480 DB101=0.
      DB102=0.
36207 PMIN2=BA2(1,4)
      PMAX2=BA2(1,4)
      JX=JX-1
      DO 5551 JJX=1,JX
      IF(PMIN2-BA2(JJX,4))5552,6661,6661
 6661 PMIN2=BA2(JJX,4)
      TMIN2=BA2(JJX,1)
      BMIN2=BA2(JJX,2)
      CMIN2=BA2(JJX,3)
      LMIN2=JJX
 5552 IF(PMAX2-BA2(JJX,4))6662,6662,5551
 6662 PMAX2=BA2(JJX,4)
      TMAX2=BA2(JJX,1)
      BMAX2=BA2(JJX,2)
      CMAX2=BA2(JJX,3)
      LMAX2=JJX
      KX=JJX
 5551 CONTINUE
      IF(LMIN2-JX)453,454,454
  453 LMIN2=LMIN2+1
      PMIN2=BA2(LMIN2,4)
      TMIN2=BA2(LMIN2,1)
```

```
      BMIN2=BA2(LMIN2,2)
      CMIN2=BA2(LMIN2,3)
  454 IF(LMAX2-1)465,465,455
  455 LMAX2=LMAX2-1
      PMAX2=BA2(LMAX2,4)
      TMAX2=BA2(LMAX2,1)
      BMAX2=BA2(LMAX2,2)
      CMAX2=BA2(LMAX2,3)
  465 DELP2=PMAX2-PMIN2
      TB2=F(63)+XSPIN*XCON
40004 IF(ABSF(TMAX2-TB2)-.335)44404,44444,44444
44444 IF(TMAX2-TB2)4100,4101,4102
 4100 TB2=TB2-.667
      GO TO 40004
 4101 GO TO 44404
 4102 TB2=TB2+.667
      GO TO 40004
44404 DB2=((1333.*DELP2)/(177245.39*F(64)*DCON))
      BDB2=DB2*1.83
      IF(IPLOT-4)21,21,22
   22 IF((CSPIN-XB2)-29.)23,24,24
   23 IF(CSPIN-(TIME1+60.))416,416,26
   26 IF(TIME1-60.)416,416,13
   13 GO TO(3737,416),ICNT
   24 TIME1=CSPIN
      IPLOT = 1
      GO TO 416
3737  ICNT = ICNT + 1
      IPLOT = 1
   21 IF(SENSE SWITCH 3)416,214
  214 GO TO(412,413,413,415),IPLOT
  412 PXX2=PMAX2
      XABB=F(64)-F(109)
      TXX2=TMAX2
      S=F(64)/VPO
      CALL EOS(S,ES)
      XAMM=(VPO*ES)/PXX2
      DO 418 JJX=LMAX2,JX
      THETA=((BA2(JJX,1)-TXX2)/.0167)*9.
      THRAD=THETA*.017453292
      S=(F(109)+XABB*COSF(THRAD))/VPO
      CALL EOS(S,ES)
      VPOES=VPO*ES
      PNNN=XAMM*BA2(JJX,4)
      XLP=.43429448*LOGF(BA2(JJX,4))
      XV=(XLP+13.)*1250.
```

```
      WRITE OUTPUT TAPE 16,8001,A    ,A(3),F(109),XABB,XAMM,BA2(JJX,1),
     1PNNN,THETA,VPOFS,BA2(JJX,4),XLP,XV
  418 CONTINUE
      IPLOT=IPLOT+1
      TXOLD=TXX2
      PXOLD=PXX2
      GO TO 416
  413 KKX=LMAX2-1
      DO 318 JJX=1,KKX
      THETA=((BA2(JJX,1)-TXOLD)/.0167)*9.
      THRAD=THETA*.017453292
      S=(F(109)+XABB*COSF(THRAD))/VPO
      CALL EOS(S,ES)
      VPOFS=VPO*ES
      PNNN=XAMM*BA2(JJX,4)
      XLP=.43429448*LOGF(BA2(JJX,4))
      XV=(XLP+13.)*1250.
      WRITE OUTPUT TAPE 16,8001,A(2),A(3),F(109),XABB,XAMM,BA2(JJX,1),
     1PNNN,THETA,VPOFS,BA2(JJX,4),XLP,XV
  318 CONTINUE
      GO TO 412
  415 IPLOT=5
  416 PNR1=RED1(1,5)
      PXR1=RED1(1,5)
      II=II-1
      DO 5556 KII=1,II
      IF(PNR1-RED1(KII,5))5057,5558,5558
 5558 PNR1=RED1(KII,5)
      TNR1=RED1(KII,1)
      BNR1=RED1(KII,2)
      DNR1=RED1(KII,3)
      CNR1=RED1(KII,4)
      LNR1=KII
 5057 IF(PXR1-RED1(KII,5))5559,5559,5556
 5559 PXR1=RED1(KII,5)
      TXR1=RED1(KII,1)
      BXR1=RED1(KII,2)
      DXR1=RED1(KII,3)
      CXR1=RED1(KII,4)
      LMR1=KII
      LX=KII
 5556 CONTINUE
      IF(LNR1-II)457,458,458
  457 LNR1=LNR1+1
      PNR1=RED1(LNR1,5)
      TNR1=RED1(LNR1,1)
```

```
      BNR1=RED1(LNR1,2)
      DNR1=RED1(LNR1,3)
      CNR1=RED1(LNR1,4)
  458 IF(LMR1-1)460,460,459
  459 LMR1=LMR1-1
      PXR1=RED1(LMR1,5)
      TXR1=RED1(LMR1,1)
      BXR1=RED1(LMR1,2)
      DXR1=RED1(LMR1,3)
      CXR1=RED1(LMR1,4)
  460 DERP1=PXR1-PNR1
      TR1=F(72)+XSPIN*XCON
50005 IF(ABSF(TXR1-TR1)-.335)55505,55555,55555
55555 IF(TXR1-TR1)4000,4001,4002
 4000 TR1=TR1-.667
      GO TO 50005
 4001 GO TO 55505
 4002 TR1=TR1+.667
      GO TO 50005
55505 DR1=((1333.*DERP1)/(177245.39*F(73)*DCON))
      RDR1=DR1*1.83
      IF(JPLOT-4)31,31,32
   32 IF((CSPIN-XB2)-29.0)33,34,34
   33 IF(CSPIN-(TIME2+60.))516,516,36
   36 IF(TIME2-60.)516,516,39
39    GO TO(725,516),JCNT
34    TIME2 = CSPIN
      JPLOT = 1
      GO TO 516
725   JCNT = JCNT + 1
      JPLOT = 1
   31 IF(SENSE SWITCH 3)516,215
  215 GO TO(512,513,513,515),JPLOT
  512 PXXR1=PXR1
      TXXR1=TXR1
      XBBB=F(73)-F(112)
      S=F(73)/VPO
      CALL FOS(S,FS)
      XMMM=(VPO*FS)/PXXR1
      DO 4180 KII=LMR1,II
      THETA=((RED1(KII,1)-TXXR1)/.0167)*9.
      THRAD=THETA*.017453292
      S=(F(112)+XBBB*COSF(THRAD))/VPO
      CALL FOS(S,FS)
      VPOFSX=VPO*FS
      PNNN=XMMM*RED1(KII,5)
```

```
      XLP=.43429448*LOGF(RED1(KII   ))
      XV=(XLP+13.)*1250.0
      WRITE OUTPUT TAPE 25,8001,A(2),A(3),F(112),XBBB,XMMM,RED1(KII,1),
     1PNNN,THETA,VPOFSX,RED1(KII,5),XLP,XV
 4180 CONTINUE
      JPLOT=JPLOT+1
      TXOR1=TXXR1
      PXOR1=PXXR1
      GO TO 516
  513 LXX=LMR1-1
      DO 3180 KII=1,LXX
      THETA=((RED1(KII,1)-TXOR1)/.0167)*9.
      THRAD=THETA*.017453292
      S=(F(112)+XBBB*COSF(THRAD))/VPO
      CALL EOS(S,ES)
      VPOES=VPO*ES
      PNNN=XMMM*RED1(KII,5)
      XLP=.43429448*LOGF(RED1(KII,5))
      XV=(XLP+13.)*1250.0
      WRITE OUTPUT TAPE 25,8001,A(2),A(3),F(112),XBBB,XMMM,RED1(KII,1),
     1PNNN,THETA,VPOES ,RED1(KII,5),XLP,XV
 3180 CONTINUE
      GO TO 512
  515 JPLOT=5
  516 PNR2=RED2(1,5)
      PXR2=RED2(1,5)
      MM=MM-1
      DO 4115 KM=1,MM
      IF(PNR2-RED2(KM,5))3113,3114,3114
 3114 PNR2=RED2(KM,5)
      TNR2=RED2(KM,1)
      BNR2=RED2(KM,2)
      DNR2=RED2(KM,3)
      CNR2=RED2(KM,4)
      LNR2=KM
 3113 IF(PXR2-RED2(KM,5))4114,4114,4115
 4114 PXR2=RED2(KM,5)
      TXR2=RED2(KM,1)
      BXR2=RED2(KM,2)
      DXR2=RED2(KM,3)
      CXR2=RED2(KM,4)
      LMR2=KM
      MX=KM
 4115 CONTINUE
      IF(LNR2-MM)461,462,462
  461 LNR2=LNR2+1
```

```
      PNR2=RED2(LNR2,5)
      TNR2=RED2(LNR2,1)
      BNR2=RED2(LNR2,2)
      DNR2=RED2(LNR2,3)
      CNR2=RED2(LNR2,4)
  462 IF(LMR2-1)464,464,463
  463 LMR2=LMR2-1
      PXR2=RED2(LMR2,5)
      TXR2=RED2(LMR2,1)
      BXR2=RED2(LMR2,2)
      DXR2=RED2(LMR2,3)
      CXR2=RED2(LMR2,4)
  464 DERP2=PXR2-PNR2
      IF(KPLOT-4)81,81,82
   82 IF((CSPIN-XB2)-29.0)83,84,84
   83 IF(CSPIN-(TIME3+60.))616,616,86
   86 IF(TIME3-60.)616,616,85
85    GO TO(726,616),KCNT
84    TIME3 = CSPIN
      KPLOT = 1
      GO TO 616
726   KCNT = KCNT + 1
      KPLOT = 1
   81 IF(SENSE SWITCH 3)616,216
  216 GO TO(612,613,613,615),KPLOT
  612 PXXR2=PXR2
      TXXR2=TXR2
      XCBB=F(76)-F(113)
      S=F(76)/VPO
      CALL FOS(S,FS)
      XCMM=(VPO*FS)/PXXR2
      DO 4118 KM=LMR2,MM
      THETA=((RED2(KM,1)-TXXR2)/.0167)*9.
      THRAD=THETA*.017453292
      S=(F(113)+XCBB*COSF(THRAD))/VPO
      CALL FOS(S,FS)
      VPOFSX=VPO*FS
      PNNN=XCMM*RED2(KM,5)
      XLP=.43429448*LOGF(RED2(KM,5))
      XV=(XLP+13.)*1250.
      WRITE OUTPUT TAPE 26,8001,A(2),A(3),F(113),XCBB,XCMM,RED2(KM,1),
     1PNNN,THETA,VPOFSX,RED2(KM,5),XLP,XV
 4118 CONTINUE
      KPLOT=KPLOT+1
      TXOR2=TXXR2
      PXOR2=PXXR2
```

```
      GO TO 616
  613 MMX=LMR2-1
      DO 4121 KM=1,MMX
      THETA=((RED2(KM,1)-TXOR2)/.0167)*9.
      THRAD=THETA*.017453292
      S=(F(113)+XCBB*COSF(THRAD))/VPO
      CALL FOS(S,FS)
      VPOFSX=VPO*FS
      PNNN=XCMM*RED2(KM,5)
      XLP=.43429448*LOGF(RED2(KM,5))
      XV=(XLP+13.)*1250.
      WRITE OUTPUT TAPE 26,8001,A(2),A(3),F(113),XCBB,XCMM,RED2(KM,1),
     1PNNN,THETA,VPOFSX,RED2(KM,5),XLP,XV
 4121 CONTINUE
      GO TO 612
  615 KPLOT=5
  616 TRN2=F(102)+XSPIN*XCON
74851 IF(ABSF(TNR2-TRN2)-.335)10368,85187,85187
85187 IF(TNR2-TRN2)3000,3001,3002
 3000 TRN2=TRN2-.667
      GO TO 74851
 3001 GO TO 10368
 3002 TRN2=TRN2+.667
      GO TO 74851
10368 TRX2=F(75)+XSPIN*XCON
14202 IF(ABSF(TXR2-TRX2)-.335)78371,37117,37117
37117 IF(TXR2-TRX2)2001,2002,2003
 2001 TRX2=TRX2-.667
      GO TO 14202
 2002 GO TO 78371
 2003 TRX2=TRX2+.667
      GO TO 14202
78371 SXRED2=F(76)/VPO
      SNRED2=F(103)/VPO
      S=SXRED2
      CALL FOS(S,FS)
      FSX2=FS
      S=SNRED2
      CALL FOS(S,FS)
      FSN2=FS
      IF(SXRED2-0.)91291,22368,22368
22368 IF(SXRED2-1.)46573,46573,25595
25595 IF(SNRED2-1.)85393,30995,30995
30995 DR201=((PXR2*1333.)/(177245.39*VPI*F(76)))
      DR202=((DFRP2*1333.)/(177245.39*VPI*2.0*(F(76)-F(113))))
      GO TO 89198
```

```
85393 DR201=((PXR2*1333.)/(177245  9*VPI*F(76)))
      DR202=((DERP2*WO*1333.)/(83150000.*(SQRTF(TO*TI))*(FSX2-FSN2)))
      GO TO 89198
46573 DR201=0.
      DR202=((DERP2*WO*1333.)/(83150000.*(SQRTF(TO*TI))*(FSX2-FSN2)))
      GO TO 89198
91291 DR201=0.
      DR202=0.
89198 RR201=DR201*1.83
      RR202=DR202*1.83
      CALL INTEP(TSPIN,NREC,YALT,YLAT,YLONG,YLST)
      WRITE OUTPUT TAPE 3,3500,TMAX2,BMAX2,CMAX2,PMAX2
      WRITE OUTPUT TAPE  3,3510,YALT,YLAT,YLONG,YLST,DELP2,TB2,F(64),
     1DB2,RDB2
      WRITE OUTPUT TAPE 3,3501,TMIN2,BMIN2,CMIN2,PMIN2
      WRITE OUTPUT TAPE 3,3610,TXR1,BXR1,DXR1,CXR1,PXR1
      WRITE OUTPUT TAPE  3,2531,YALT,YLAT,YLONG,YLST,DERP1,TR1,F(73),
     1DR1,RDR1
      WRITE OUTPUT TAPE 3,3611,TNR1,BNR1,DNR1,CNR1,PNR1
      WRITE OUTPUT TAPE 3,34095,TXR2,PXR2,TRX2,F(76),SXRED2,DR201,RR201
      WRITE OUTPUT TAPE 3,19174,YALT,YLAT,YLONG,YLST,DERP2,F(113),
     1DR202,RR202
      WRITE OUTPUT TAPE 3,39615,TNR2,PNR2,TRN2,F(103),SNRED2
      WRITE OUTPUT TAPE 6,8000,IMON,IDAY,TXR1 ,YLAT,YLONG,YLST,YALT,
     1HID,RDB2,RDR1,RR201,RR202
  112 IX=1
      JX=1
      II=1
      MM=1
      IF(B(2)-(F(132)+21.0))2108,218,218
 2108 IF(TSPIN-(F(132)+21.0))281,218,218
  281 TSPIN=CSPIN+.667
      XSPIN=XSPIN+1.0
      GO TO 52
  218 IF(XCNT-F(209))954,955,955
  955 WRITE OUTPUT TAPE 3,951
      GO TO 953
  954 READ TAPE 5,F
      XCNT=XCNT+1.
      IF(B(2)-(F(132)+21.0))33303,218,218
33303 IF(TSPIN-(F(132)+21.0))33333,218,218
33333 TSPIN=B(2)+.667
      XSPIN=0.
   52 CONTINUE
      GO TO 100
  106 WRITE OUTPUT TAPE 3,950
```

```
  953 REWIND 15
      END FILE 3
      IF(SENSE SWITCH 4)335,334
  334 CALL PRESS
  335 END FILE 3
      END FILE 6
      END FILE 16
      END FILE 25
      END FILE 26
      NRZA = NRZA + 1
      GO TO 8888
960   IF(SENSE SWITCH 4)980,981
980   NRRA = NRZA
      GO TO 982
981   NRRA = 2*NRZA
982   PRINT 983,NRRA,NRZA
      PRINT 959
  200 FORMAT(50X1H117H WRONG TAPE ON B5)
  202 FORMAT(9F8.2/9F8.2)
  203 FORMAT(4F8.2,A3)
  204 FORMAT(9F6.3/9F6.3)
  300 FORMAT(9F8.6/7F8.6)
  303 FORMAT(9F8.2/7F8.2)
  305 FORMAT(6F6.3)
  400 FORMAT(6XF7.2,2XF6.3,3XE9.2,4XF6.3,4XE9.2,3XF6.3,4XF6.3,3XE9.2,3XF
     16.3,4XF6.3,3XF9.2)
  500 FORMAT(15XF6.3,3XF9.2,4XF6.3,4XE9.2,3XF6.3,4XF6.3,3XE9.2,3XF6.3,4X
     1F6.3,3XF9.2)
600   FORMAT(1H149X15HSATELLITE NO. =F8.0,20X6HEDIT =I4,5X7HORBIT =I4,//
      158X7HMONTH =F8.0,//60X5HDAY =F8.0,//59X6HYEAR =F8.0,//52X13HSTATIO
      2N NO. =F8.0,//48X17HANALOG TAPE NO. =F8.0,//45X20HPRESSURE GAUGES
      3ID =F15.0///)
  625 FORMAT(30X15HSATELLITE NO. =F12.4,//38X7HMONTH =F12.4,//40X5HDAY =
     1F12.4,//39X6HYEAR =F12.4,//32X13HSTATION NO. =F12.44,//28X17HANALO
     2G TAPE NO. =F12.4,//30X15HS-6 ASPECT ID =F15.4)
  699 FORMAT(1H126X72HPRESSURE GAUGES DC OUTPUT VOLTAGES CONVERTED TO PR
     1ESSURE AND DENSITY    ////)
  700 FORMAT(1H126X72HPRESSURE GAUGES DC OUTPUT VOLTAGES CONVERTED TO IO
     1N CURRENT AND PRESSURE////)
  800 FORMAT   (6X109HTIME     BA 1     CURRENT      BA 2      CURRENT
     1   RED 1      ADJ     CURRENT     RED 2     ADJ     CURRENT////)
  900 FORMAT(6X107HTIME   GAUGE VOLTS    ADJ VOLTS    CURRENT   PRESSURE
     1   TIME   GAUGE VOLTS   ADJ VOLTS   CURRENT   PRESSURE////)
  950 FORMAT(35X27HALL DATA HAS BEEN PROCESSED)
959   FORMAT(1H111HEND OF JOB ////////////////////////////////////)
970   FORMAT(14XI4,10XI4)
```

```
983    FORMAT(20X13HFILES ON A3 =    ,//20X22HFILES ON A6,B6,C5,C6 =I4)
 1000 FORMAT(3XF9.3,4XF7.3,15XE9.2,3XE9.2,3XF9.3,3XF7.3,12XE9.2,4XE9.2)
 1009 FORMAT(3XF9.3,4XF7.3,4XF6.3,5XE9.2,3XE9.2,3XF9.3,3XF7.3,2XF6.3,4XE
     19.2,4XF9.2)
 2500 FORMAT    (4X65HTIME(MAX)     GAUGE(VOLTS)     ADJ VOLTS    CURRENT
     1 PRESSURE(MAX)//)
 2520 FORMAT(4X66HTIME(MIN)     GAUGE(VOLTS)      ADJ VOLTS    CURRENT     P
     1RESSURE(MIN)////)
 3610 FORMAT(6X10HTMAX(SEC)=F9.3,3X8HV(VOLT)=F7.3,3X6HADJ V=F7.3,3X7HC(A
     1MP)=F9.2,3X9HP(TORRS)=F9.2//)
 3611 FORMAT(6X10HTMIN(SEC)=F9.3,3X8HV(VOLT)=F7.3,3X6HADJ V=F7.3,3X7HC(A
     1MP)=F9.2,3X9HP(TORRS)=F9.2/////)
33321 FORMAT(60XI3)
 9090 FORMAT(90XI2)
 9994 FORMAT(70XF9.2)
 9993 FORMAT(50XE9.2)
 9992 FORMAT(30XE9.2)
 9991 FORMAT(4(10XF9.3))
12222 FORMAT(1H029X6H1BA1   9F6.3,/30X6H2BA1   9F6.3)
13333 FORMAT(1H029X6H1BA2   9F6.3,/30X6H2BA2   9F6.3)
12121 FORMAT(1H0   //37X14HTIME   -   HRS =I2,5X5HMIN =I2,5X5HSEC =F6.3)
14444 FORMAT(1H037X31HBAYARD ALPERT 2 DC SHIFT = .075)
15555 FORMAT(1H037X12HFLIGHT CAL   6F6.3)
20969 FORMAT(1H037X4HTO =F8.3 ,2X5HTI = F7.3,2X5HMO = F7.3,2X5HMI = F7.3
     1)
99570 FORMAT(1H037X13HTORR/AMP 1 = F7.3,6X13HTORR/AMP 2 = F7.3)
 3510 FORMAT(3X3HBA2,4X4HALT=F6.1,3X4HLAT=F6.1,3X5HLONG=F6.1,3X4HLST=F6.
     12,3X4HDP =E9.2,2X6HTXRAM=F9.3,2X4HRX =F7.3,2X9HDENSITY =E9.3/117XE
     29.3)
 2531 FORMAT(3X3HRH1,4X4HALT=F6.1,3X4HLAT=F6.1,3X5HLONG=F6.1,3X4HLST=F6.
     12,3X4HDP =E9.2,2X6HTXRAM=F9.3,2X4HRX =F7.3,2X9HDENSITY =E9.3/117X
     2E9.3)
19174 FORMAT(3X3HRH2,4X4HALT=F6.1,3X4HLAT=F6.1,3X5HLONG=F6.1,3X4HLST=F6.
     12,3X9HDELTA P =F9.2,3X13HAVE.RAM VEL.=F7.3,3X9HDENSITY =E9.3/117X
     2E9.3)
53402 FORMAT(3X3HBA1,4X4HALT=F6.1,3X4HLAT=F6.1,3X5HLONG=F6.1,3X4HLST=F6.
     12,3X9HDELTA P =E9.2,3X13HAVE.RAM VEL.=F7.3,3X9HDENSITY =E9.2//)
34095 FORMAT(6X10HTMAX(SEC)=F9.3,3X9HP(TORRS)=E9.2,3X11HTXRAM(SEC)=F9.3,
     13X13HMAX.RAM VEL.=F5.3,2X3HSX=F11.3,2X9HDENSITY =E9.3/117XE9.3)
39615 FORMAT(6X10HTMIN(SEC)=F9.3,3X9HP(TORRS)=E9.2,3X11HTNRAM(SEC)=F9.3,
     14X13HMIN.RAM VEL.=F7.3,2X4HSN =F11.3/////)
 3500 FORMAT(6X10HTMAX(SEC)=F9.3,3X8HV(VOLT)=F7.3,3X7HC(AMP)=E9.2,3X9HP(
     1TORRS)=F9.2//)
 3501 FORMAT(6X10HTMIN(SEC)=F9.3,3X8HV(VOLT)=F7.3,3X7HC(AMP)=E9.2,3X9HP(
     1TORRS)=F9.2/////)
27982 FORMAT(6X10HTMAX(SEC)=F9.3,3X9HP(TORRS)=E9.2,3X11HTXRAM(SEC)=F9.3,
```

```
     13X13HMAX.RAM VEL.=F5.3,2X3H' =E11.3,2X9HDENSITY =E9.2//)
93965 FORMAT(6X10HTMIN(SEC)=F9.3,[illegible]9HP(TORRS)=E9.2,3X11HTNRAM(SEC)=F9.3,
     14X13HMIN.RAM VEL.=F7.3,2X4HSN =F11.3/////)
 8000 FORMAT(2I2,F9.3,F7.2,F8.2,F6.2,F6.1,A3,4E9.3)
 8001 FORMAT(F4.1,F5.1,E9.3,E9.3,E9.3,F9.3,F9.3,F9.3,F9.3,E9.3,F9.5,F9.0
     1)
77276 FORMAT(10X3HS =F9.3,5X4HFS =F9.3,5X4HVPO=E9.3,5X4HRX =F9.3)
  951 FORMAT(35X18HEND OF ASPECT DATA)
  219 FORMAT(38X30HRH1  - 2.75        RH2  - 3.22 )
  949 FORMAT(1H037X25H  CALCULATED ASPECT DATA )
986   FORMAT(1H1//////25X36HMOUNT NEW TAPE ON B5---- PUSH START //////)
      END
*     CARDS COLUMN
*     LABEL
C  MATCH
      SUBROUTINE MATCH(NEDI,N)
      DIMENSION      B(255),E(209),F(142),A(12)
      REWIND 5
      READ TAPE 15,A
8     READ TAPE 5,F
      IF(99999996.0-E(202))1,1,2
2     IF(A(2)-F(202))7,3,7
3     IF(A(3)-F(203))7,4,7
4     IF(A(5)-F(205))7,5,7
5     IF(5.0-ABSF(A(11)-F(200)))7,6,6
6     IF(A(10)-F(199))7,12,7
12    BACKSPACE 5
      N =0
      BACKSPACE 15
      GO TO 9
1     PRINT 10,NEDI
      GO TO 11
7     READ TAPE 5,F
      IF(99999996. -F(1))8,8,7
10    FORMAT(10X31HASPECT NOT AVAILABLE FOR EDIW = I4)
202   FORMAT(F8.2/F8.2)
204   FORMAT(F6.3/F6.3/F6.3/F6.3)
300   FORMAT(F8.6/F8.6)
206   FORMAT(F6.3)
301   FORMAT(F8.6)
11    READ 202,BI,BIF
      READ 300,BE,BF
      READ 202,BG,BH
      READ 206,BAC
      READ 301,BAE
      READ 206,BAD
```

```
      READ 204,BA,BB,BC,BD
      N = 1
9     RETURN
      END
*     CARDS COLUMN
      SUBROUTINE GTMC (A,B,C,D)
      TESTMF(A) = SIGNF(MIN1F(ABSF(A),1.0),A)
      IF(RAD)11,10,11
 10   RAD=57.2957795
      THK=11.494
      PHK=-69.68
      SK=SINF(THK/RAD)
      CK=COSF(THK/RAD)
 11   E=A/RAD
 1    DEL=B-PHK
      IF (B - 180.0) 3,3,6
  6   DEL =DEL-180.0
  3   CT = SINF(E)
      COST = TESTMF(CK*CT+SK*COSF(E)*COSF(DEL/RAD))
      C= ASIND(COST)
      SINT=SQRTF(1.0-COST**2)
      ARG = TESTMF((CT-CK*COST)/(SK*SINT))
      D=ACOSD(ARG)
  4   IF (DEL) 7,8,8
  7   D=D-180.0
      GO TO 99
    8 IF (DEL - 180.0) 9,9,7
    9 D = 180.0 - D
   99 RETURN
      END
*     CARDS COLUMN
*     LABEL
C INTEP
      SUBROUTINE INTEP(TS    ,NREC,YALT,YLAT,YLONG,YLST)
      DIMENSION A(8),B(255),BV(18),BI(18),BV2(18),BI2(18),VC(8),RI(8),
     1VC2(8),RI2(8),ELN(18),RIC(8),R2C(8),BV1(18),VC1(8),R1C(8),C(21),
     2D(21),RSCX(4 ),RSX(4 ),RS1(4 ),RS2(4 ),RSC1(4 ),RSC2(4 ),P(21),T(2
     31),BA1(90,4),BA2(90,4),RFD1(90,5),RFD2(90,5),F(209),F(142)
     1            , XTIME(30),XALT(30),XLAT(30),XLONG(30),XLST(30),XRBA1(3
     10),XRBA2(30),XRRH1(30),     XRRH2(30)
      COMMON BI,BV1,BV2,VC1,VC2,RI,RI2,XHF,XMF,XLF,X2HF,X2MF,X2LF,XHL,
     1XML,XLL,X2HL,X2ML,X2LL,NEDI,NORB
     1       ,XTIME,XALT,XLAT,XLONG,XLST,XRBA1,XRBA2,XRRH1,XRRH2
      TSS=TS-.334
      JA=1
1300  IF(TSS-XTIME(JA)) 12 ,1302,1303
```

```
12      IF(JA-1)1304,1304,1301
1303    IF(JA-NREC)11   ,1301,10
11      JA = JA + 1
        GO TO 1300
10      JA = JA-1
        GO TO 1301
1302    IF(JA-1)  1304,1304,1305
1304    YALT=XALT(JA)
        YLAT=XLAT(JA)
        YLONG =XLONG(JA)
        YLST=XLST(JA)
        GO TO 1
1305    IF(JA-NREC)1301,1301,1306
1306    YALT=XALT(NREC)
        YLAT=XLAT(NREC)
        YLONG=XLONG(NREC)
        YLST=XLST(NREC)
        GO TO 1
1301    CASP=(TSS-XTIME(JA-1))/(XTIME(JA)-XTIME(JA-1))
        YALT = CASP*(XALT(JA)-XALT(JA-1)) + XALT(JA-1)
        YLAT = CASP*(XLAT(JA)-XLAT(JA-1)) + XLAT(JA-1)
        YLONG = CASP*(XLONG(JA)-XLONG(JA-1)) + XLONG(JA-1)
        YLST = CASP*(XLST(JA)-XLST(JA-1)) + XLST(JA-1)
1       RETURN
        END
*       CARDS COLUMN
*       LIST 8
*       SUBROUTINE PAGE
        SUBROUTINE PAGE (SENSOR)
        DIMENSION FLOK(209),CLOK(141)
C           PAGE 1 FORMAT
        PSTOP=0.
        CENSOR=SENSOR
        READ TAPE 5,FLOK
        STOP=FLOK(209)
        SATNO=FLOK(201)
        XMO=FLOK(202)
        DAY=FLOK(203)
        YR=FLOK(204)
        STANO=FLOK(205)
        ANATN=FLOK(206)
        READ TAPE 5,CLOK
        PSTOP=PSTOP+1.
        DAYGTM=CLOK(2)
        JHRSMN=CLOK(3)/3600.
        HRSEC=3600*JHRSMN
```

```
      RSEC=CLOK(3)-HRSEC
      MSECMN=RSEC/60.
      B=MSECMN*60
      RSEC1M=RSEC-B
      PLONGN=CLOK(10)
      PLATMN=CLOK(11)
      ALTMIN=CLOK(12)
      PLOCMN=CLOK(13)
  100 IF(PSTOP-STOP)11,300,300
   11 READ TAPE 5,CLOK
      PSTOP=PSTOP+1.
      PLONGM=CLOK(10)
      PLATMX=CLOK(11)
      ALTMAX=CLOK(12)
      PLOCMX=CLOK(13)
      DAYGTX=CLOK(2)
      JHRSMX=CLOK(3)/3600.
      HRSEC=3600*JHRSMX
      RSEC=CLOK(3)-HRSEC
      MSECMX=RSEC/60.
      B=MSECMX*60
      RSEC1X=RSEC-B
      GO TO 100
  300 CALL PAGE 1 (SATNO,STANO,         XMO,DAY,YR,ALTMIN,ALTMAX,PLATMN,P
     CLATMX,PLOCMN,PLOCMX,JHRSMN,MSECMN,RSEC1M,JHRSMX,MSECMX,RSEC1X,DAYG
     CTM,DAYGTX,CENSOR,PLONGN,PLONGM)
      N = 0
      NSTOP = PSTOP
      NSTOP = NSTOP + 1
2     IF(NSTOP-N)3,3,1
1     BACKSPACE 5
      N = N +1
      GO TO 2
3     RETURN
      END
*     CARDS COLUMN
*     LIST 8
*     SUBROUTINE PAGE 1
      SUBROUTINE PAGE 1 (SATNO,STANO,         XMO,DAY,YR,ALTMIN,ALTMAX,PL
     CATMN,PLATMX,PLOCMN,PLOCMX,JHRSMN,MSECMN,RSEC1M,JHRSMX,MSECMX,RSEC1
     CX,DAYGTM,DAYGTX,CENSOR,PLONGN,PLONGM)
      I=CENSOR
      JA=STANO
      CALL GTMC(PLATMN,PLONGN,GAMMA,ALPHA)
      CALL GTMC(PLATMX,PLONGM,RHO,BETA)
1001  FORMAT (1H0,39X,25HGEOMAGNETIC LAT (DEG.)   F7.2,4H TO F7.2    )
```

```
1000  FORMAT (1H0,39X,25HGEOMAGNET C LONG(DEG.)    F7.2,4H TO F7.2    )
      WRITE OUTPUT TAPE 3,100,SATNO
      GO TO (211,212,213,214,215,216,217,218),I
  211 WRITE OUTPUT TAPE 3,201
      GO TO 209
  212 WRITE OUTPUT TAPE 3,202
      GO TO 209
  213 WRITE OUTPUT TAPE 3,203
      GO TO 209
  214 WRITE OUTPUT TAPE 3,204
      GO TO 209
  215 WRITE OUTPUT TAPE 3,205
      GO TO 209
  216 WRITE OUTPUT TAPE 3,206
      GO TO 209
  217 WRITE OUTPUT TAPE 3,207
      GO TO 209
  218 WRITE OUTPUT TAPE 3,208
  209 GO TO (1,2,3,4,5,6,7,8,9,10,11,12,13,14,15,16,17,18),JA
    1 WRITE OUTPUT TAPE    3,21,XMO,DAY,YR
      GO TO 41
    2 WRITE OUTPUT TAPE    3,22
      GO TO 41
    3 WRITE OUTPUT TAPE    3,23,XMO,DAY,YR
      GO TO 41
    4 WRITE OUTPUT TAPE    3,22
      GO TO 41
    5 WRITE OUTPUT TAPE    3,25,XMO,DAY,YR
      GO TO 41
    6 WRITE OUTPUT TAPE    3,26,XMO,DAY,YR
      GO TO 41
    7 WRITE OUTPUT TAPE    3,27,XMO,DAY,YR
      GO TO 41
    8 WRITE OUTPUT TAPE    3,28,XMO,DAY,YR
      GO TO 41
    9 WRITE OUTPUT TAPE    3,22
      GO TO 41
   10 WRITE OUTPUT TAPE    3,22
      GO TO 41
   11 WRITE OUTPUT TAPE    3,22
      GO TO 41
   12 WRITE OUTPUT TAPE    3,32,XMO,DAY,YR
      GO TO 41
   13 WRITE OUTPUT TAPE    3,33,XMO,DAY,YR
      GO TO 41
   14 WRITE OUTPUT TAPE    3,34,XMO,DAY,YR
```

```
      GO TO 41
   15 WRITE OUTPUT TAPE    3,35,XMO,DAY,YR
      GO TO 41
   16 WRITE OUTPUT TAPE    3,36,XMO,DAY,YR
      GO TO 41
   17 WRITE OUTPUT TAPE    3,37,XMO,DAY,YR
      GO TO 41
   18 WRITE OUTPUT TAPE    3,38,XMO,DAY,YR
   41 WRITE OUTPUT TAPE 3,400,ALTMIN,ALTMAX
      WRITE OUTPUT TAPE 3,500,PLATMN,PLATMX
      WRITE OUTPUT TAPE 3,1001,GAMMA,RHO
      WRITE OUTPUT TAPE 3,501,PLONGN,PLONGM
      WRITE OUTPUT TAPE 3,1000,ALPHA,BETA
      WRITE OUTPUT TAPE 3,600,PLOCMN,PLOCMX
      WRITE OUTPUT TAPE 3,700
      WRITE OUTPUT TAPE 3,800,DAYGTM,JHRSMN,MSECMN,RSEC1M
      WRITE OUTPUT TAPE 3,900,DAYGTX,JHRSMX,MSECMX,RSEC1X
  100 FORMAT (1H0                                52X,13HSATELLITE    SF2.0)
  201 FORMAT (1H0,39X,33H                DATA ANALYSIS                )
  202 FORMAT (1H0,39X,33H              ETP NO.2  DATA  ANALYSIS       )
  203 FORMAT (1H0,39X,33H             B.A.  NO.1  DATA  ANALYSIS      )
  204 FORMAT (1H0,39X,33H             B.A.  NO.2  DATA  ANALYSIS      )
  205 FORMAT (1H0,39X,33H             M.S.  NO.1  DATA  ANALYSIS      )
  206 FORMAT (1H0,39X,33H             M.S.  NO.2  DATA  ANALYSIS      )
  207 FORMAT (1H0,39X,33H             R.H.  NO.1  DATA  ANALYSIS      )
  208 FORMAT (1H0,39X,33H             R.H.  NO.2  DATA  ANALYSIS      )
   21 FORMAT (1H0,39X,26HSTATION - BLOSSOM POINT    ,5HDATE 3F3.0    )
   22 FORMAT (1H0,39X,28HSTATION NUMBER IS INCORRECT    )
   23 FORMAT (1H0,39X,26HSTATION - FORT MYERS       ,5HDATE 3F3.0    )
   25 FORMAT (1H0,39X,26HSTATION - QUITO            ,5HDATE 3F3.0    )
   26 FORMAT (1H0,39X,26HSTATION - LIMA             ,5HDATE 3F3.0    )
   27 FORMAT (1H0,39X,26HSTATION - ANTOFAGASTA      ,5HDATE 3F3.0    )
   28 FORMAT (1H0,39X,26HSTATION - SANTIAGO         ,5HDATE 3F3.0    )
   32 FORMAT (1H0,39X,26HSTATION - ST. JOHNS        ,5HDATE 3F3.0    )
   33 FORMAT (1H0,39X,26HSTATION - FAIRBANKS        ,5HDATE 3F3.0    )
   34 FORMAT (1H0,39X,26HSTATION - E. GRAND FORKS   ,5HDATE 3F3.0    )
   35 FORMAT (1H0,39X,26HSTATION - WINKFIELD        ,5HDATE 3F3.0    )
   36 FORMAT (1H0,39X,26HSTATION - JOHANNESBURG     ,5HDATE 3F3.0    )
   37 FORMAT (1H0,39X,26HSTATION - GOLDSTONE LAKE   ,5HDATE 3F3.0    )
   38 FORMAT (1H0,39X,26HSTATION - WOMMERA          ,5HDATE 3F3.0    )
  400 FORMAT (1H0,39X,25HALTITUDE RANGE     (KM)    F7.2,4H TO F7.2    )
  500 FORMAT (1H0,39X,25HLATITUDE RANGE   (DEG.)    F7.2,4H TO F7.2    )
  501 FORMAT (1H0,39X,25HLONGITUDE RANGE  (DEG.)    F7.2,4H TO F7.2    )
  600 FORMAT (1H0,39X,25HLOCAL TIME        (HRS)    F7.2,4H TO F7.2    )
  700 FORMAT (1H0,54X,10HTIME (GMT)    )
  800 FORMAT (1H0,39X,5HFROM F4.0,6HDAYS  I2,6H HRS  I2,6H MIN  F6.3,4H
```

```
      CSEC    )
  900 FORMAT (1H0,39X,5HTO   F4.0,5HDAYS  I2,6H HRS  I2,6H MIN  F6.3,4H
      CSEC    )
      RETURN
      END
*     CARDS COLUMN
      SUBROUTINE FOS (S,FS)
C     PROGRAM TO EVALUTE THE THERMAL TRANSPIRATION FUNCTION
      DIMENSION  B(2) ,TN(2)
      B(1)=S
      B(2)=0.
D     SS= B
D     S2=SS*SS
      IF(B(1)-3.8) 8,8,6
D    6 DFS=3.5449077*SS
      GO TO 70
     8 TN(2)=0.
D     ONF=1.
D     TWO=2.
D     T=TWO*S2
      IF(ABSF(B(1))-2.5)10,10,40
D   10 A=ONF
D     SUM=ONF
      DO 20 N=1,49
      TN(1)=N
D     C1= (ONF-TWO*TN)/(ONF+TWO*TN)
D     C2= S2/TN
D     A= C1*(C2*A)
D     FRD= SUM+A
D     IF (FRD-SUM) 20,30,20
D   20 SUM=FRD
D   30 DFS=EXPF(-S2)+T*SUM+1.7724538509*SS
      GO TO 70
D   40 A=-ONF
D     SUM=0.0
      NEND=S2
      DO 50 N=1,NEND
      TN(1)=N
D     A=((ONF-TWO*TN)/T)*A
D   50 SUM=SUM+A
D     DFS=SUM*EXPF(-S2)
      IF(B(1)) 70,70,60
D   60 DFS=DFS+3.5449077*SS
   70 FS=DFS
      RETURN
      END
```

```
*       CARDS COLUMN
        SUBROUTINE PRESS
C       PRESSURE GAUGES DC OUTPUT VOLTAGES CONVERTED TO
C       CORRECTED ION CURRENT
        DIMENSION A(8),B(255),BV(18),BI(18),BV2(18),BI2(18),VC(8),RI(8),
       1VC2(8),RI2(8),ELN(18),RIC(8),R2C(8),BV1(18),VC1(8),R1C(8),C(21),
       2D(21),RSCX(4 ),RSX(4 ),RS1(4 ),RS2(4 ),RSC1(4 ),RSC2(4 ),P(21),T(2
       31),BA1(90,4),BA2(90,4),RED1(90,5),RED2(90,5),E(209),F(142)
       1            , XTIME(30),XALT(30),XLAT(30),XLONG(30),XLST(30),XRBA1(3
       10),XRBA2(30),XRRH1(30),     XRRH2(30)
        COMMON BI,BV1,BV2,VC1,VC2,RI,RI2,XHF,XMF,XLF,X2HF,X2MF,X2LF,XHL,
       1XML,XLL,X2HL,X2ML,X2LL,NEDI,NORB
       1       ,XTIME,XALT,XLAT,XLONG,XLST,XRBA1,XRBA2,XRRH1,XRRH2
 8888  READ TAPE 15,A
        IF(A(8)-60000004.)2,3,2
C       PRINT ERROR MESSAGE - WRONG TAPE
    2   PRINT 200
        GO TO 8888
    3   A(4)=A(4)+60.
        LW1=A(1)
        LW2=A(2)
        LW3=A(3)
        LW4=A(4)
        LW5=A(5)
        LW6=A(6)
        NBA2=0
        NRED1=0
        NRED2=0
        WRITE OUTPUT TAPE 3,600,LW1,NEDI,NORB,LW2,LW3,LW4,LW5,LW6,A(3)
        READ TAPE 15,B
        B(2)=B(2)/1000.
        JHRSMN=B(2)/3600.
        HRSEC=3600*JHRSMN
        RSEC=B(2)-HRSEC
        MSECMN=RSEC/60.
        XRRR=MSECMN*60
        RSEC1M=RSEC-XRRR
        BACKSPACE 15
        WRITE OUTPUT TAPE 3,12121,JHRSMN,MSECMN,RSEC1M
        WRITE OUTPUT TAPE 3,12222,BV1
        WRITE OUTPUT TAPE 3,13333,BV2
        WRITE OUTPUT TAPE 3,14444
        WRITE OUTPUT TAPE 3,15555,XHF,XMF,XLF,X2HF,X2MF,X2LF
        WRITE OUTPUT TAPE 3,700
        IF(SENSE SWITCH 1)711,722
  722   WRITE OUTPUT TAPE 3,900
```

```
      GO TO 6111
  711 WRITE OUTPUT TAPE 3,800
 6111 X=1.
      DO 4 I=1,18
      FLN(I)=LOGF(BI(I))
    4 CONTINUE
      DO 30 M=1,8
      R1C(M)=LOGF(RI(M))
   30 CONTINUE
      DO 95 M=1,8
      R2C(M)=LOGF(RI2(M))
   95 CONTINUE
      CON=.05/48.
  100 READ TAPE 15,B
      DO 52 K=1,10
      L=25*(K-1)
      DO 8282 J=1,25
      I=J+L
      B(J)=B(I)
 8282 CONTINUE
      IF(B(1)-99999999.)5252,106,5252
 5252 J=3
      DO 2345 I=1,18
      BV(I)=BV1(I)
 2345 CONTINUE
      I=1
      B(2)=B(2)/1000.
      T(3)=B(2)+CON*(3.)
      T(4)=B(2)+CON*19.
      T(5)=B(2)+CON*35.
   29 IF(J-6)7,8,7
    7 IF(B(J)-BV(I))6,11,12
   12 I=I+1
      IF(I-19)7,14,14
   14 I=1
      C(J)=00.00
      P(J)=00.00
      J=J+1
      I=1
      IF(J-12)29,25,29
    6 IF(I-1)9,88,9
   88 C(J)=00.00
      P(J)=00.00
      J=J+1
      I=1
      IF(J-12)29,25,29
```

```
    9 CLN=FLN(I-1)+((B(J)-BV(I-1)  (BV(I)-BV(I-1)))*(ELN(I)-ELN(I-1))
      GO TO 15
   11 CLN=FLN(I)
   15 XION=FXPF(CLN)
      N=J
      C(N)=XION
      J=J+1
      I=1
      IF(J-12)29,25,29
C     START OF BAYARD ALPERT 2 COMPUTATION
    8 DO 20 I=1,18
      BV(I)=BV2(I)+.075
   20 CONTINUE
      T(9)=B(2)+CON*5.
      T(10)=B(2)+CON*21.
      T(11)=B(2)+CON*37.
      J=9
      I=1
      IF(J-12)7,25,7
C     START OF REDHEAD COMPUTATIONS
   25 DVC=(XHL-XHF+XML-XMF+XLL-XLF)/3.0
      T(15)=B(2)+CON*10.
      T(16)=B(2)+CON*26.
      T(17)=B(2)+CON*42.
      DO 5432 M=1,8
      VC(M)=VC1(M)
 5432 CONTINUE
      DO 5324 M=1,8
      RIC(M)=R1C(M)
 5324 CONTINUE
      J=15
      M=1
   35 IF(J-18)41,42,41
   41 IF(J-21)51,77,51
   51 D(J)=B(J)+DVC
      IF(D(J)-VC(M))61,71,72
   72 M=M+1
      IF(M-9)51,75,75
   75 M=1
      C(J)=00.00
      D(J)=00.00
      P(J)=00.00
      J=J+1
      GO TO 35
   71 CRN=RIC(M)
      D(J)=B(J)
```

```
      GO TO 80
   61 IF(M-1)6262,99,6262
   99 C(J)=00.00
      D(J)=00.00
      J=J+1
      M=1
      GO TO 35
 6262 CRN=RIC(M-1)+((D(J)-VC(M-1))/(VC(M)-VC(M-1)))*(RIC(M)-RIC(M-1))
   80 XION=EXPF(CRN)
      C(J)=XION
      J=J+1
      M=1
      GO TO 35
C     START OF REDHEAD 2 COMPUTATIONS
   42 DO 91 M=1,8
      VC(M)=VC2(M)
   91 CONTINUE
      DO 222 M=1,8
      RIC(M)=R2C(M)
  222 CONTINUE
      T(18)=B(2)+CON*11.
      T(19)=B(2)+CON*27.
      T(20)=B(2)+CON*43.
      DVC=(X2HL-X2HF+X2ML-X2MF+X2LL-X2LF)/3.0
      J=18
      M=1
      GO TO 41
C          START OF REDHEAD COMPUTATION FOR PRESSURE
   77 DO 1234 J=15,17
      IF(C(J)-1.0E-09)789,987,987
  789 SRSX=10.
      SRSXA=0.
      GO TO 4047
  987 IF(C(J)-1.0E-08)2332,2332,1117
 2332 SRSX=7.22
      SRSXA=.60E-10
      GO TO 4047
 1117 IF(C(J)-1.01E-08)2332,2227,2227
 2227 IF(C(J)-1.0E-07)3337,3337,4447
 3337 SRSX=9.3
      SRSXA=.42E-09
      GO TO 4047
 4447 IF(C(J)-1.01E-07)3337,5557,5557
 5557 IF(C(J)-1.0E-06)6667,6667,8887
 6667 SRSX=13.9
      SRSXA=.45E-08
```

```
      GO TO 4047
8887  IF(C(J)-1.01E-06)6667,9997,9997
9997  IF(C(J)-2.8E-06)2027,2027,3037
2027  SRSX=16.9
      SRSXA=.34E-07
      GO TO 4047
3037  IF(C(J)-2.81E-06)2027,2727,2727
2727  IF(C(J)-1.0E-05)2828,2828,3838
2828  SRSX=10.8
      SRSXA=-.59E-07
      GO TO 4047
3838  SRSX=10.
      SRSXA=0.
4047  P(J)=(C(J)/SRSX)+SRSXA
1234  CONTINUE
      DO 4321 J=18,20
      IF(C(J)-1.0E-09)7111,7222,7222
7111  SRSX=10.
      SRSXA=0.
      GO TO 7808
7222  IF(C(J)-1.0E-08)7333,7333,7444
7333  SRSX=4.72
      SRSXA=.61E-10
      GO TO 7808
7444  IF(C(J)-1.01E-08)7333,7555,7555
7555  IF(C(J)-1.0E-07)7666,7666,7888
7666  SRSX=6.22
      SRSXA=.23E-09
      GO TO 7808
7888  IF(C(J)-1.01E-07)7666,7101,7101
7101  IF(C(J)-1.0E-06)7202,7202,7303
7202  SRSX=8.66
      SRSXA=.24E-08
      GO TO 7808
7303  IF(C(J)-1.01E-06)7202,7404,7404
7404  IF(C(J)-2.8E-06)7505,7505,7606
7505  SRSX=11.8
      SRSXA=.23E-07
      GO TO 7808
7606  IF(C(J)-2.81E-06)7505,7005,7005
7005  IF(C(J)-1.0E-05)7025,7025,7035
7025  SRSX=11.8
      SRSXA=.23E-07
      GO TO 7808
7035  SRSX=10.
      SRSXA=0.
```

```
 7808 P(J)=(C(J)/SRSX)+SRSXA
 4321 CONTINUE
C       START  OF  BAYARD ALPERT 1  PRESSURE COMPUTATION
      J=21
  444 IF(B(J)-15.0)212,232,212
  232 EM1=B(J+2)
  323 J=J+25
      IF(J-271)121,131,121
  131 GO TO 433
  121 IF(B(J)-0.)323,322,323
  322 EM2=B(J+2)
      GO TO 433
  212 IF(B(J)-0.)411,404,411
  404 EM2=B(J+2)
  661 J=J+25
      IF(J-271)626,433,626
  626 IF(B(J)-15.0)661,636,661
  636 EM1=B(J+2)
      GO TO 433
  411 J=J+25
      IF(J-271)444,555,444
  555 IF(X-1.)433,422,433
  422 EM1=-0.
      EM2=-0.
      X=X+1.
  433 SEN1=(1.0/97.5)*EM1
      SEN2=(1.0/119.5)*EM2
      X=X+1.
      DO 5445 J=3,5
      P(J)=C(J)/SEN1
 5445 CONTINUE
      DO 4554 J=9,11
      P(J)=C(J)/SEN2
 4554 CONTINUE
      IF(SENSE SWITCH 1)654,456
  654 WRITE OUTPUT TAPE 3,400,B(2),B(3),C(3),B(9),C(9),B(15),D(15),C(15)
     1,B(18),D(18),C(18)
      WRITE OUTPUT TAPE 3,500,B(4),C(4),B(10),C(10),B(16),D(16),C(16),
     1B(19),D(19),C(19)
      WRITE OUTPUT TAPE 3,500,B(5),C(5),B(11),C(11),B(17),D(17),C(17),
     1B(20),D(20),C(20)
      GO TO 52
  456 WRITE OUTPUT TAPE 3,9191,EM1,EM2
      WRITE OUTPUT TAPE 3,1000,T(3),B(3),C(3),P(3),T(9),B(9),C(9),P(9)
      WRITE OUTPUT TAPE 3,1009,T(15),B(15),D(15),C(15),P(15),T(18),B(18)
     1,D(18),C(18),P(18)
```

```
      WRITE OUTPUT TAPE 3,1000,T(   ,B(4),C(4),P(4),T(10),B(10),C(10),P(1
     10)
      WRITE OUTPUT TAPE 3,1009,T(16),B(16),D(16),C(16),P(16),T(19),B(19)
     1,D(19),C(19),P(19)
      WRITE OUTPUT TAPE 3,1000,T(5),B(5),C(5),P(5),T(11),B(11),C(11),P(1
     11)
      WRITE OUTPUT TAPE 3,1009,T(17),B(17),D(17),C(17),P(17),T(20),B(20)
     1,D(20),C(20),P(20)
   52 CONTINUE
      GO TO 100
  106 WRITE OUTPUT TAPE 3,950
      REWIND 15
  200 FORMAT(50X1H117H WRONG TAPE ON B5)
  202 FORMAT(9F8.2/9E8.2)
  204 FORMAT(9F6.3/9E6.3)
  300 FORMAT(9F8.6/7E8.6)
  303 FORMAT(9F8.2/7E8.2)
  305 FORMAT(6F6.3)
  400 FORMAT(6XF7.2,2XF6.3,3XE9.2,4XF6.3,4XE9.2,3XF6.3,4XF6.3,3XE9.2,3XF
     16.3,4XF6.3,3XE9.2)
  500 FORMAT(15XF6.3,3XE9.2,4XF6.3,4XE9.2,3XF6.3,4XF6.3,3XE9.2,3XF6.3,4X
     1F6.3,3XE9.2)
  600 FORMAT(1H154X15HSATELLITE NO. =  I5,18X6HEDIT =I4,5X7HORBIT =I4,
     1//63X7HMONTH = I5,//65X5HDAY =
     1  I5,//64X6HYEAR = I5,//57X13HSTATION NO. =I5,//53X17HANALOG TAPE
     2NO. =I5,//50X20HPRESSURE GAUGES ID =F13.0//3//)
  700 FORMAT(1H126X72HPRESSURE GAUGES DC OUTPUT VOLTAGES CONVERTED TO IO
     1N CURRENT AND PRESSURE////)
  800 FORMAT   (6X109HTIME      BA 1      CURRENT       BA 2       CURRENT
     1   RED 1       ADJ      CURRENT      RED 2      ADJ      CURRENT////)
  900 FORMAT(6X107HTIME   GAUGE VOLTS    ADJ VOLTS    CURRENT   PRESSURE
     1   TIME   GAUGE VOLTS   ADJ VOLTS   CURRENT   PRESSURE////)
  950 FORMAT(35X27HALL DATA HAS BEEN PROCESSED)
 1000 FORMAT(3XF9.3,4XF7.3,15XE9.2,3XF9.2,3XF9.3,3XF7.3,12XE9.2,4XE9.2)
 1009 FORMAT(3XF9.3,4XF7.3,4XF6.3,5XE9.2,3XE9.2,3XF9.3,3XF7.3,2XF6.3,4XE
     19.2,4XF9.2)
33221 FORMAT(50XI2)
12222 FORMAT(1H036X6H1BA1  9F6.3,/37X6H2BA1  9F6.3)
13333 FORMAT(1H036X6H1BA2  9F6.3,/37X6H2BA2  9F6.3)
12121 FORMAT(1H0////44X14HTIME  -  HRS =I2,5X5HMIN =I2 ,5X5HSEC =F6.3)
14444 FORMAT(1H044X31HBAYARD ALPERT 2 DC SHIFT = .075)
15555 FORMAT(1H044X12HFLIGHT CAL  6F6.3)
 9191 FORMAT(30X22HBA1 EMISSION CURRENT =F9.3,10X22HBA2 EMISSION CURRENT
     1 =F9.3)
      RETURN
      END
```

```
*       SUBROUTINE DEN
*       CARDS COLUMN
*        EAP
         LBL      DEN.X
         ENTRY    DEN
   DEN   CAL      @B6
         STA      *+1
         SDN
         CAL      @A6
         STA      *+1
         SDN
         CAL      @C5
         STA      *+1
         SDN
         CAL      @C6
         STA      *+1
         SDN
         TRA      1.4
  @B6    @CT      000000002206
 @A6     @CT      000000001206
 @C5     @CT      000000003205
 @C6     @CT      000000003206
         END
.
*       END TAPE
```

BA 1 AND BA 2 VOLTAGE TO CURRENT CONVERSION TABLE*

BA 1 V_i Volts	I_c Current	BA 2 V_i Volts
.188	1.0×10^{-11}	−0.212
.285	2.0×10^{-11}	−0.123
.495	3.0×10^{-11}	0.049
.611	5.0×10^{-11}	0.212
.721	7.0×10^{-11}	0.305
.859	1.0×10^{-10}	0.418
1.065	2.0×10^{-10}	0.638
1.172	3.0×10^{-10}	0.790
1.345	1.0×10^{-7}	0.985
1.503	3.0×10^{-9}	1.164
1.808	1.0×10^{-8}	1.488
2.195	3.0×10^{-8}	1.868
2.565	1.0×10^{-7}	2.170
2.955	3.0×10^{-7}	2.538
3.330	1.0×10^{-6}	2.883
3.755	1.0×10^{-5}	3.307
4.211	3.0×10^{-5}	3.720
4.686	3.0×10^{-5}	4.235

*Table is the same for RH gauges except that the gauge voltage values are different and the I_c is only given for seven (7) values.

GAUGE SENSITIVITY
TABLE OF VALUES A AND B FOR REDHEAD
GAUGES ONE AND TWO

Gauge Current Range	RH 1 B	RH 1 A	RH 2 B	RH 2 A
$10^{-9} - 10^{-8}$ amps	7.22	0.60×10^{-10}	4.72	0.61×10^{-10}
$10^{-8} - 10^{-7}$	9.3	0.42×10^{-9}	6.22	0.23×10^{-10}
$10^{-7} - 10^{-6}$	13.9	0.45×10^{-8}	8.66	0.24×10^{-8}
$1 \times 10^{-6} - 2.8 \times 10^{-6}$	16.9	0.34×10^{-7}	11.8	0.23×10^{-7}
$2.8 \times 10^{-6} - 10^{-5}$	10.8	0.59×10^{-7}	11.8	0.23×10^{-7}