https://ntrs.nasa.gov/search.jsp?R=19660004268 2018-05-25T16:36:09+00:00Z

NATIONAL AERONAUTICS AND SPACE ADMINISTRATION

Technical Report No. 32-832

Mariner IV Science Platform Structure and Actuator Design, Development and Flight Performance

G. Coyle

FACILITY FORM 602

N 66-13557
(ACCESSION NUMBER)

23
(PAGES)

CR 68571
(NASA CR OR TMX OR AD NUMBER)

(THRU)

1
(CODE)

31
(CATEGORY)

GPO PRICE $

CFSTI PRICE(S) $

Hard copy (HC) 1.00

Microfiche (MF) .50

ff 653 July 65

JET PROPULSION LABORATORY
CALIFORNIA INSTITUTE OF TECHNOLOGY
PASADENA, CALIFORNIA

November 15, 1965

NATIONAL AERONAUTICS AND SPACE ADMINISTRATION

Technical Report No. 32-832

Mariner IV Science Platform Structure and Actuator Design, Development and Flight Performance

G. Coyle

J. N. Wilson, *Manager*
Mariner Development Section

JET PROPULSION LABORATORY
CALIFORNIA INSTITUTE OF TECHNOLOGY
PASADENA, CALIFORNIA

November 15, 1965

Copyright © 1965
Jet Propulsion Laboratory
California Institute of Technology

Prepared Under Contract No. NAS 7-100
National Aeronautics & Space Administration

CONTENTS

I. Introduction 1

II. Functional Description 2
- A. Payload Definition 2
- B. Platform Definition 3
- C. Actuator Definition 3
- D. Science Cover Definition 3

III. Science Platform Development 3
- A. Design Implementation 3
  - 1. Cable Integration 3
  - 2. Support Shaft 5
  - 3. Instrument Mount 5
  - 4. Scan Bearings 5
  - 5. Thermal Environment 5
- B. Design Evolution 6
  - 1. Revisions in Functional Requirements 6
  - 2. Telemetry Requirements 7
- C. Developmental Tests 7
  - 1. Thermal Compatibility 7
  - 2. Structural Integrity 7

IV. Scan Actuator Development 9
- A. Design Implementation 9
  - 1. Scan Motor and Drive 9
  - 2. Actuator Slip Clutch 9
  - 3. Gears 10
  - 4. Bearings and Seals 10
  - 5. Scan Reversal Interface 10
  - 6. Telemetry Outputs 11
- B. Fabrication Problems 11
- C. Actuator Tests 11

V. Science Cover Development 12
- A. Design Implementation 12
  - 1. Cover Plate 12
  - 2. Hinge Hardware 12
  - 3. Lens Cover Assembly 13
  - 4. Cover Latch and Latch Actuator 13
  - 5. Cover Position Telemetry 14

CONTENTS (Cont'd)

B. Fabrication Problems 14
1. Threaded Insert Installation 15
2. Skin Delamination 15
3. Outgas Contamination 15
C. Science Cover and Latch Tests 15

VI. Integrated System Testing 16
A. Bearing Chatter 16
B. Science Cover 17
C. Scan-Inhibit Switch 17

VII. Flight Experience 17

VIII. Conclusions 18

FIGURES

1. *Mariner IV* spacecraft 2
2. Section view of platform 4
3. Platform with turret shield 6
4. Vibration response curve 8
5. Scan actuator assembly 9
6. Section view of clutch assembly 10
7. Science cover assembly 12
8. TV light array assembly 13
9. Cover latch and lanyard assembly 14
10. Cover honeycomb insert failure 15
11. Cover skin delamination 15

ABSTRACT

13557

This Report describes the *Mariner IV* scan platform and actuator and the developmental problems encountered. Equipment test results and flight experience are summarized to support the discussion of design adequacy. The scan structure and actuator design are considered to be a reasonable solution within the framework of schedule, structural efficiency, interface definition, and—most important—desired functional objectives. The design techniques and problem areas described are considered to be useful data for application to future spacecraft programs.

Author

I. INTRODUCTION

The *Mariner IV* spacecraft has successfully completed its 229-day trip to Mars. The objectives of the *Mariner* mission were to obtain scientific data in interplanetary space and near Mars, close-up TV pictures of the Mars surface, and atmospheric data by the occultation of the spacecraft RF signals by Mars. In all respects, these objectives have been achieved.

To provide a better understanding of the physical relationship of the scan platform-mounted instruments to the spacecraft structure, Fig. 1 illustrates the *Mariner IV* in its final configuration. To develop a perspective of in-flight orientation, major elements have been identified. The shadow sides of the solar panels are evident such that proper Sun-direction can be determined. The science platform is shown on the spacecraft Z-axis (or Sun-line axis) with its optics cover in place and instruments positioned in the predicted direction of Mars at encounter.

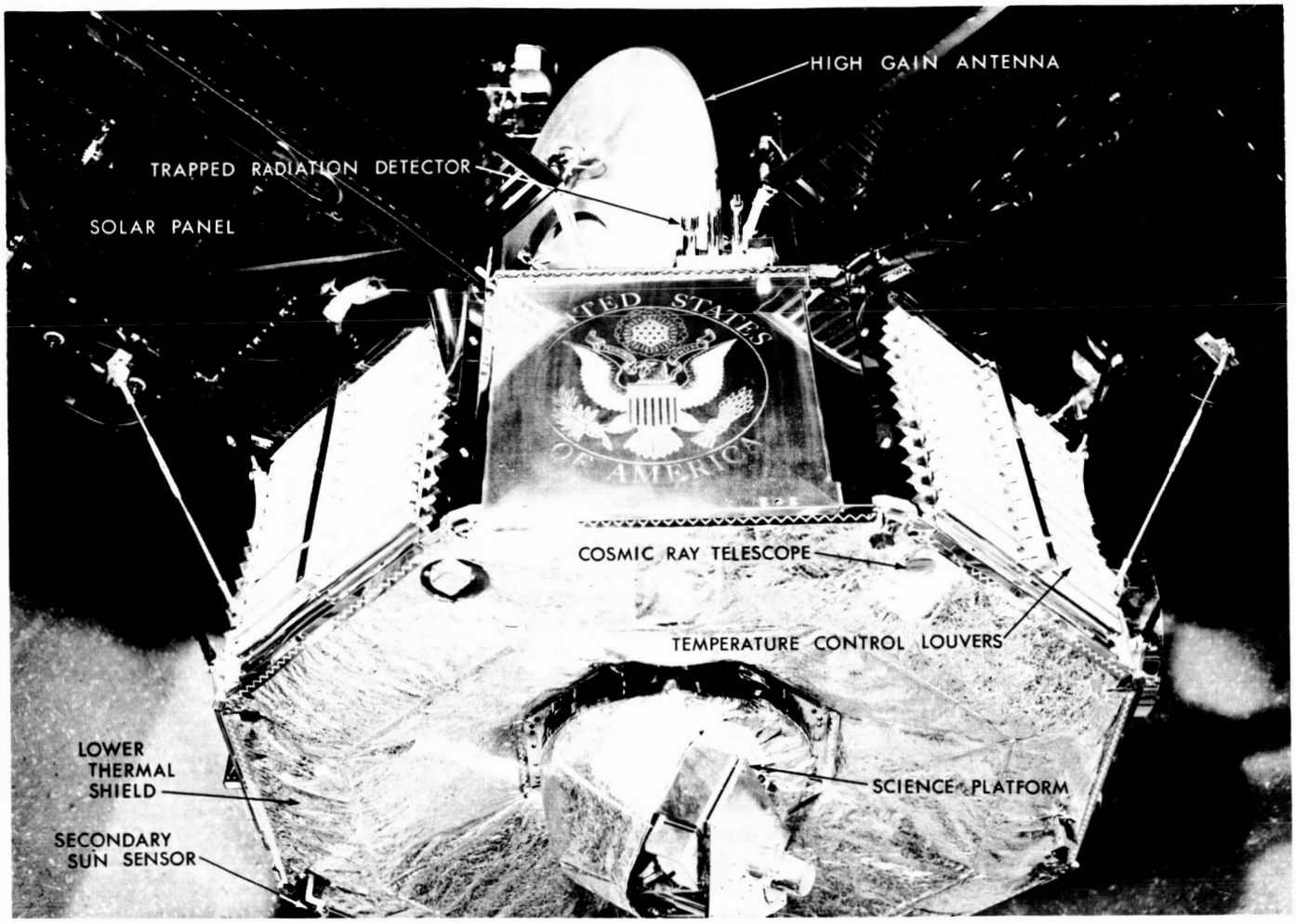

Fig. 1. *Mariner IV* spacecraft

II. FUNCTIONAL DESCRIPTION

The objective of the science platform subsystem was to provide a gimbaled support structure for the planet-oriented science capable of satisfying the pointing requirements for these experiments. In addition to the basic pointing direction requirements, the platform subsystem had to satisfy other basic considerations such as structural and thermal compatibility, alignment accuracies, and spacecraft system interaction requirements. To establish design ground rules, the following basic functional definition was generated early in the preliminary design.

A. Payload Definition

The planetary science and acquisition sensors consisted of a TV, UV photometer, wide-angle Mars sensor and narrow-angle Mars sensor. Total weight of the platform-

mounted sensors was 11.5 lb. All sensors were to be mounted to provide parallel optical axes. Location of the integrated package was to be such as to provide an unobstructed field of view of the planet near the region of closest approach. The thermal environment had to be compatible with operating temperature extremes of 0°F to 100°F and minimum storage temperature of −50°F.

B. Platform Definition

To provide the necessary field of view and be compatible with basic bus structure requirement, the science package was mounted at the bottom of the central cavity of the basic octagon. The pointing direction was chosen to be 120 deg from the Sun direction, with the scan axis parallel to the spacecraft Z-axis. Scan freedom was defined as 180-deg motion about the scan axis centered in the predicted nominal direction of Mars. This amount of scan amplitude was felt to be easily attainable without compromise and to more than satisfy the coverage required for a 3σ dispersion on trajectory.

Platform alignment criteria was established to be compatible with reasonable manufacturing tolerances and yet not compromise the instruments' pointing direction accuracy. The ability to remove and replace subassemblies without realignment of the assembly was also considered. Distributing the tolerances among the various subsystems yielded a platform-to-spacecraft structure alignment of ±1 deg with a maximum error between individual science sensor mounting planes of 0.1 deg. Mounting plane tolerance included any standoffs required for electrical or thermal isolation.

C. Actuator Definition

Since the actuator requirements were similar to those for the *Mariner II* radiometer actuator, an attempt was made to salvage as much of this design as was applicable. In general, the motor and much of the gear train could be used, resulting in a power input requirement defined as 26 v, 400 cps, split phase with a maximum power of 4 w. The output shaft characteristics were established as a single speed of 0.5 deg/sec with an output torque slip clutch limited to 40 in.-lb. The choice of output torque was based on tests of the *Mariner II* actuator capabilities and appeared to be more than sufficient for the application.

D. Science Cover Definition

In addition to the basic requirements for providing structural support and articulation, a deployable cover was requested to be integrated into the platform structure. The function of this cover was: (1) to provide protection for the sensor optics from stray sunlight and micrometeorite damage during cruise, and (2) to provide a light source array powered from the ground umbilical to check proper operation of the science and acquisition sensors during systems and on-pad tests. Actuation of the cover deployment mechanism was provided by the pyrotechnic subsystem and was sequenced to occur at the beginning of the encounter phase.

III. SCIENCE PLATFORM DEVELOPMENT

A. Design Implementation

Restrictions on the required field of view and scan freedom limited the selection of possible structural configurations to that of a cantilevered tube mounted in bearings to provide scan motion. A machined, two-piece aluminum instrument mount was riveted to the overhung portion of the tube and scan motion was introduced through a splined drive link located on the inboard end. Relative location of the scan actuator and drive link was based on consideration for cable harness routing to the science instruments. The assembled configuration in cutaway view is shown in Fig. 2.

1. Cable Integration

Cable flexure across the scan joint was accomplished by securing the cable on the spacecraft structure at the actuator end of the support tube and to the instrument platform at the opposite end. The cable was then twisted

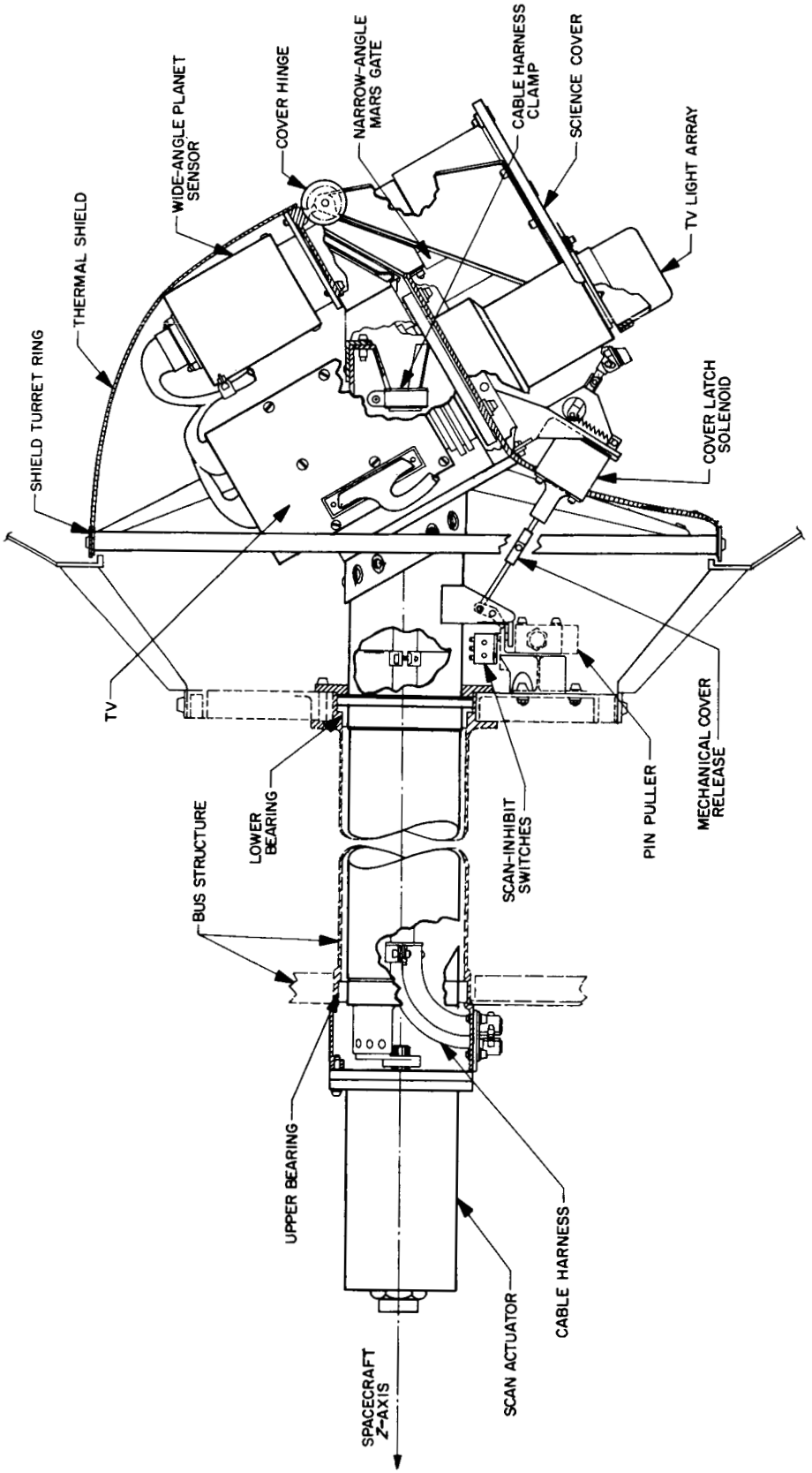

Fig. 2. Section view of platform

over the full length (15 in.) of the support tube providing low torque and reasonable resistance to abrasion. To enhance the low-torque characteristics of the cable routing, it was specified that teflon insulation be used on all conductors and harness fabrication be done with no twist imparted to the bundle. Twisted pairs were allowed in cases where signal noise could be an overriding consideration.

2. Support Shaft

To support the boost environment loads, the scan tube was sized at 3.00-in. OD with 0.060-in. walls, thereby giving a first mode bending frequency of approximately 80 cps and tube strength sufficient to provide a reasonable safety margin assuming a lateral load of 50 *g* RMS. Torsion loads were supported through a single pyrotechnic pin-puller latch located immediately below the lower bearing mounted to the H-frame structure. A check on the effect of latch stiffness and tube size on torsional frequency modes demonstrated a first mode torsional resonance of 150 cps. The resulting input to the science instruments was considered to be sufficiently below their first critical frequency of 190 cps not to create a problem.

3. Instrument Mount

To provide the critical alignment between instruments, the platform support structure was designed as a one-piece machining with all bulkhead mounting planes parallel. Each instrument attach point was a raised boss which, after final assembly and stress relieving, could be faced off to the required 0.1-deg mounting plane tolerance.

Where electrical insulation was required at the interface, 0.003-in.-thick mica washers were found to exhibit sufficient uniformity and lack of compressibility to not affect alignment.

4. Scan Bearings

The bearings selected for use on the scan platform were of the sleeve liner type with the liner material being a teflon-filled asbestos. The notable characteristics of this material are: (1) good dimensional stability, (2) low coefficient of friction, and (3) high compression strength, of the order of 20,000 psi, with the mode of bearing failure being plastic deformation rather than delamination or spalling which could cause shaft seizure. Diametral bearing clearance was established as 0.002 in. based on anticipated temperature gradients across the joint and consideration for the resultant nonlinear response of the system to vibration input. Axial loads were removed through the flanged lower bearing with an end play of 0.0005 to 0.0015 in. set on assembly by the use of peelable, laminated shims.

Although rolling element bearings offered many advantages in this application, several factors eliminated them from consideration. The most notable concern was for the effect of long-term storage in high vacuum. Many tests have been run on bearings prepared for vacuum use with dry film lubricants, impregnated separators, oil reservoirs and other variations, but most available data are concerned with operation in a vacuum instead of vacuum storage under preload. Dry film lubricants and impregnated separators depend on motion to effectively distribute the lubricant, and there is some doubt as to the condition of the contact surface of a bearing held in a fixed orientation, subjected to high point loads during vibration and then allowed to remain stationary for eight months in a high vacuum. If oil storage were considered, the effectiveness of the reservoir seals would be questionable and contamination of thermal and optical surfaces would be a strong deterrent.

5. Thermal Environment

As eventually defined, the temperature requirements of the platform-mounted instruments were somewhat compatible, allowing them to be handled as a uniform temperature assembly. Since the required environment was much the same as the basic spacecraft, the attempt was made to thermally couple the science platform to the much larger thermal mass of the bus. As a result of the poor conduction path through the scan bearings, radiation transfer had to be relied upon almost entirely. As a first attempt, the 1-ft length of scan tube through the center of the bus was black-anodized, as was the support structure on the bus. All external surfaces on the science and platform were made of polished aluminum or were gold-plated to reduce heat loss. The resultant temperature balance of the instruments appeared somewhat marginal, so it was decided to enclose the entire package in an insulated turret shell that rotated with the platform. With the science packages painted black, and open directly to the interior of the bus, radiation transfer was greatly improved and insensitive to errors in the heat loss calculation for the platform assembly. The resultant configuration as assembled on a flight spacecraft is depicted in Fig. 3.

The platform could be installed with or without the science instruments attached. The installation sequence consisted of inserting the platform tube through the lower bearing while feeding the complete harness assembly ahead of it. The platform was then aligned and fixed in place by installing the split cap bearing. Engaging the

Fig. 3. Platform with turret shield

pinpuller latch automatically positioned the platform rotationally, thus allowing installation of the prealigned actuator. Instruments, science cover, and thermal shields could then be attached at such time as systems checkout was required.

B. Design Evolution

1. Revisions in Functional Requirements

a. Instruments. As with almost any development program involving the simultaneous design of equipment which must eventually interface, redefinition of the equipment configuration and function occurred which affected the design of the scan platform. For example, alternate TV and wide-angle sensor configurations were being considered which would have constrained the cover design if a different philosophy had been used. A more drastic revision than this occurred when the decision was made to eliminate the infrared spectrometer experiment weighing some 20 lb and substitute in its place the ultraviolet photometer experiment which weighed approximately 6.5 lb, thus cutting in half the total platform-mounted payload weight.

Although this redefinition required the platform to be completely redesigned, the resulting configuration was less complex. As an example, the use of a cantilevered support would not have been possible with such a payload weight since not only would the support tube size have been unreasonable but the bus structure could not have supported such bending moments. The configuration, therefore, required a bearing support below the instruments which was to be hinged out of the way following boost to provide scan motion clearance.

A second potential problem involved the thermal incompatibility of the IR spectrometer which would have required the use of conductive and radiative isolation in conjunction with a bus-mounted cryostat. In addition, the thermal incompatibility raised some doubts as to the ability to maintain optical alignment with such a temperature gradient present across the assembly. The approach which was to have been taken was to bias the mounting alignment as required to account for the change when subjected to the actual operating environment. The amount of the bias necessary would be checked out on each assembly. Discarding the IR spectrometer thus allowed the use of a more nearly isothermal assembly and eliminated the need for a cryostat and its accompanying problems of mounting and providing for flexible tube routing across the scan joint. The companion problem of multiple-path cable harness routing was also eliminated.

b. Trajectory. Following the final selection of instruments, the scan platform was subjected to numerous revisions as a result of redefinition in the Mars approach trajectory geometry. Although the effect was not a complete redesign, scan amplitude and stow position were changed several times to account for the requirement of locating the instruments in the nominal look direction of the planet while stowed in the event of a scan subsystem malfunction. The trajectory eventually selected forced this failure mode requirement to be violated since the resulting latch position could not be accommodated without a delay in schedule.

c. Scan-Inhibit Switch. A late requirement which had little effect on the design was the request for a scan motor interlock switch which would inhibit scan power to the actuator when the platform release latch was engaged. This feature would allow scan system checkout without concern for inadvertent supply of power to the actuator

with the output shaft locked. Although the actuator was equipped with a slip clutch capable of handling such an occurrence, it was felt that frequent operation in such a mode would degrade the clutch calibration and possibly damage the assembly.

The mechanization consisted of attaching two hermetically sealed microswitches in parallel, with the switch's leaf spring actuator follower resting against the end of the pinpuller latch pin. Therefore, when the pinpuller was actuated, the spring follower was released, allowing redundant switch closures to the actuator power supply.

2. Telemetry Requirements

As the flight sequence became better established and telemetry channel availability known, analysis of failure modes in the planetary science sequence indicated that proper evaluation of status would be necessary if an alternate operational mode were to be utilized.

Platform Unlatch Indication. In particular, information as to whether the platform latch was disengaged properly had to be known prior to the midcourse maneuver since such a failure in the assembly's ability to scan would bias the choice of aiming points. As mentioned previously, it was necessary to disregard the requirement of having the nominal trajectory compatible with the stow position in favor of the scientific value of an Earth occulting trajectory. Therefore, if a scan latch failure had occurred, the knowledge could affect the decision on what maneuver to attempt.

To provide the necessary latch indication, a third microswitch was added to the scan inhibit switch assembly. This switch was in turn wired to a data encoder register such that an event count would be recorded when the latch pin was retracted. Suitable capacitor and blocking diode circuitry was added to the switch assembly to make it compatible with the data encoder input.

C. Developmental Tests

As a result of the basic interactions between the bus support structure and the science platform, the most realistic qualification program for the assembly was concluded to be to include its acceptance criteria into the test program generated for the integrated spacecraft. This program consisted of a series of structures to test thermal compatibility, interface compatibility, static and dynamic load verification, separation tests, operational tests, and other system-oriented functions. Complete assemblies were delivered to each developmental spacecraft and performance-monitored to determine their acceptability during each phase. For the purpose of evaluation, the major areas of concern during the developmental program were structural integrity and thermal compatibility. Operational performance was verified during systems tests on the PTM and flight spacecrafts and will be discussed separately.

1. Thermal Compatibility

At the time of initial temperature control spacecraft testing, the decision had not yet been made to use the insulated turret shield for the scan platform. The resultant temperature balances for the conductive coupled platform were, therefore, quite marginal for the proper operation of the TV. With the scan bearing shimmed tight for maximum conduction, the Mars cruise environment data demonstrated a temperature of $-20°F$ compared to the allowable operating limit of $-50°F$. Adjusting the data for nominally sized clearance in the bearings, the predicted TV temperature became $-53°F$, which was obviously unacceptable.

Later tests utilizing the radiation coupling philosophy of the turret shell yielded an operating temperature of $+20°F$ with the added feature of being insensitive to the scan bearing tolerance. As a secondary benefit, the somewhat isothermal environment of the assembly gave increased assurance of the proper alignment of the instruments and predictable bearing clearances.

2. Structural Integrity

The ability of the platform to provide a reasonable environment for the instruments during boost was the subject of some discussion prior to testing of the structural test model spacecraft. Dynamic gains through the bus structure, across the bearings, and into the cantilevered mount were not thoroughly understood from analysis, partly as a result of the nonlinear effect of bearing clearance. The result of vibration testing indicated that bearing clearance was not a large contributor to the overall gain of the system but in fact provided a certain degree of attenuation at higher frequencies.

As an example of the response to a typical low frequency sweep, Fig. 4 is a plot of g-load vs frequency for locations on the bus structure upstream of the bearings and at science instrument locations for a 1-g input at the separation joint. It can be seen that the response indicates that the majority of the gain is a result of the entire bus structure and platform being driven with only small increases across the scan joint. The load peaks can be correlated with expected primary modes of the structure; the 60-cps resonance is related to the primary bus mode

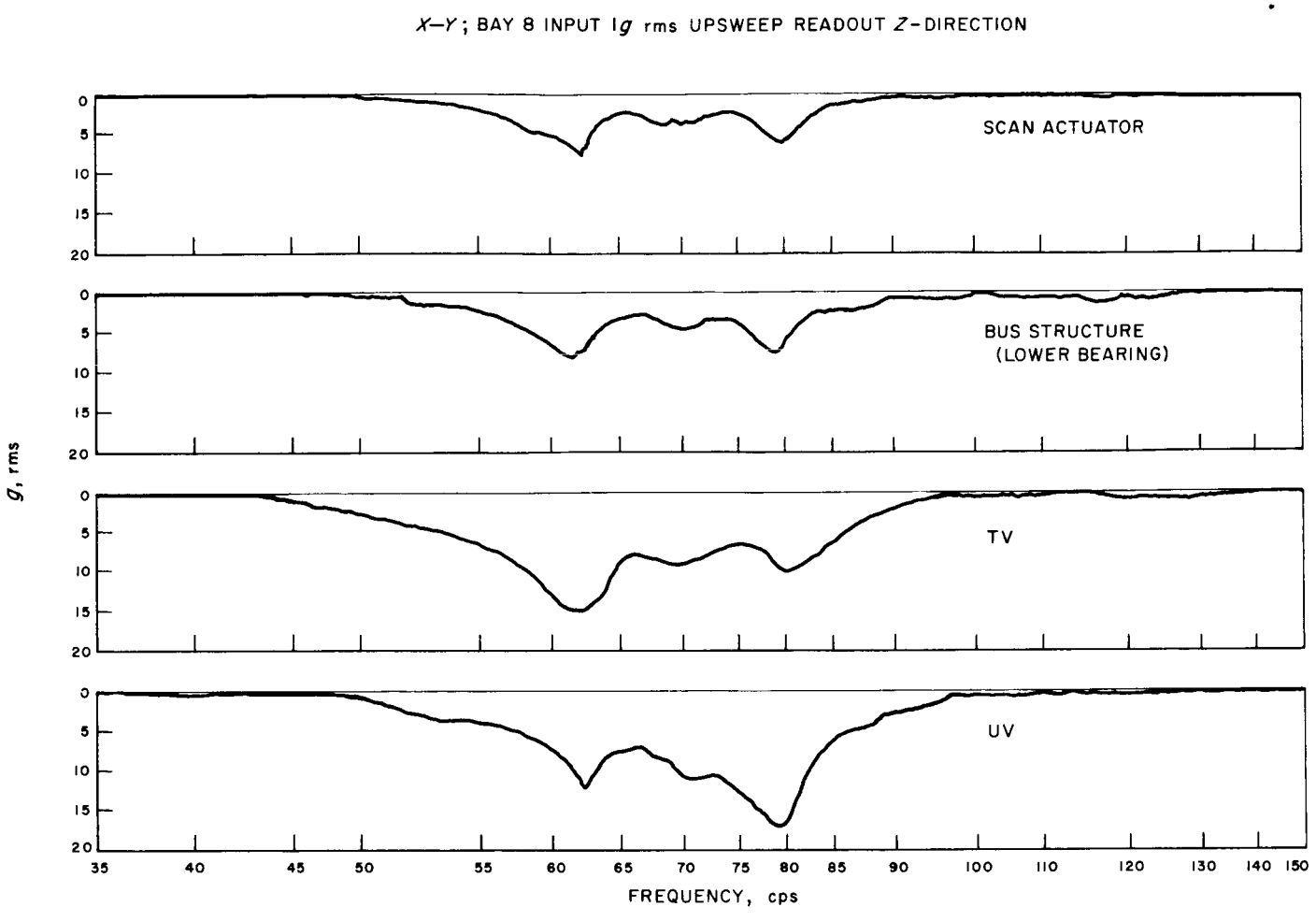

Fig. 4. Vibration response curve

with the 78-cps point coincident with the calculated first bending mode of the cantilevered platform.

No failures in the platform structure occurred during any series of tests. The conclusion reached was that a satisfactory environment was achieved for the science instruments. If it had been necessary to reduce the overall gain in the system, it was evident that modification to the bus itself would be required. To further qualify the platform structure, a separate test was conducted on a scan platform held in rigid bearing supports and fully ballasted with simulated science instruments. Some 2 to 3 hr of accumulated test time at 20-g sine sweep and complex wave input produced no structural failure.

Inspection of the sleeve scan bearings after completion of the first series of STM type-approval tests indicated only a slight change in appearance to that of a well burnished bearing with an accompanying increase in radial clearance of 0.001 in. and no increase in end play. Subsequent inspections following the remaining test series indicated no further change in appearance or dimension. The same stable configuration was also later evident following tests of the flight spacecrafts.

IV. SCAN ACTUATOR DEVELOPMENT

A. Design Implementation

The early concept of the science planetary scan system consisted of an integral science instrument support platform and scan actuator. The actuator was intended to be a cylindrical extension of the scan platform tube with its splined output shaft mating with a fixed attachment on the spacecraft structure. This configuration would have made it possible to remove the scan platform and actuator as a unit. This requirement dictated that the scan actuator be cylindrical and capable of fitting inside the 3-in.-diam thin wall tube. The design was directed along these lines.

As the requirements became better defined, it became obvious that the amount of cabling required for the science instruments could not be controlled by a service loop at the base of the spacecraft. A scheme of routing the cables down the scan platform tube was devised which required that the scan actuator be separated from the scan platform and be relocated on top of the primary structure. The design of the actuator had progressed far enough that the actuator retained its cylindrical configuration in the final design. The actuator assembly, with cover removed, is illustrated in Fig. 5.

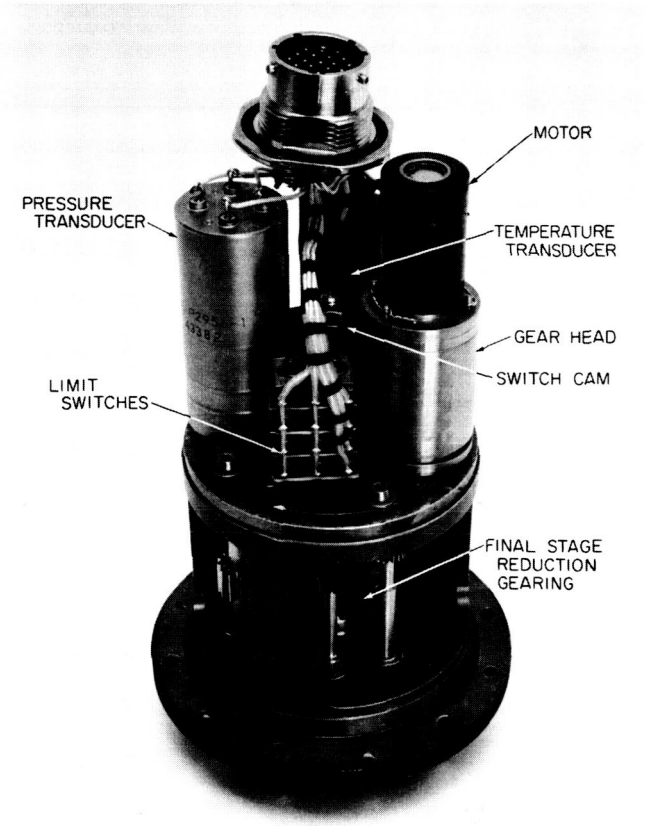

Fig. 5. Scan actuator assembly

1. Scan Motor and Drive

The scan actuator consisted primarily of a 400 cps, 26 v, 8000 rpm synchronous motor and reduction gearing to give an output speed of 0.5 deg/sec. The first stage of reduction (980:1) was achieved in a gearhead attached to the motor. An additional 98:1 reduction was achieved external to the motor gearhead using a magnesium housing and standard gearing techniques.

2. Actuator Slip Clutch

A torque capability of 100 in.-lb at the actuator output was possible from this motor and gear reduction; however, to protect the actuator from damage due to possible mishandling during systems testings, a clutch was included in the final reduction stage which limited the torque to 40 in.-lb. The clutch design was somewhat unique in that it was cam-operated and was not solely dependent upon the breakaway and running friction coefficients of the clutch surfaces. As a result, the breakaway and running torques were nearly identical.

To understand how the clutch operates, one can envision the load transmission path as illustrated in Fig. 6. The power input from the scan motor and from prior stages of reduction gearing is introduced through the drive gear and attached outer clutch plate. Belleville loading springs force the floating inner clutch plate into contact and allow torque to be transmitted to the three ⅛-in.-diam balls caged in place by conical detents. Identical detents in the output-shaft-mounted ramp plate form the means of ball caging to the output shaft and complete the load path.

In operation, as torque is introduced at either end of the drive train, the inner clutch plate attempts to rotate relative to the ramp plate, thus loading the balls against the detent ramps. The horizontal component is transmitted through the clutch as torque; the vertical component reacts against the loading springs, tending to drive the clutch surfaces apart. As input torque is increased, a point is reached where the vertical component

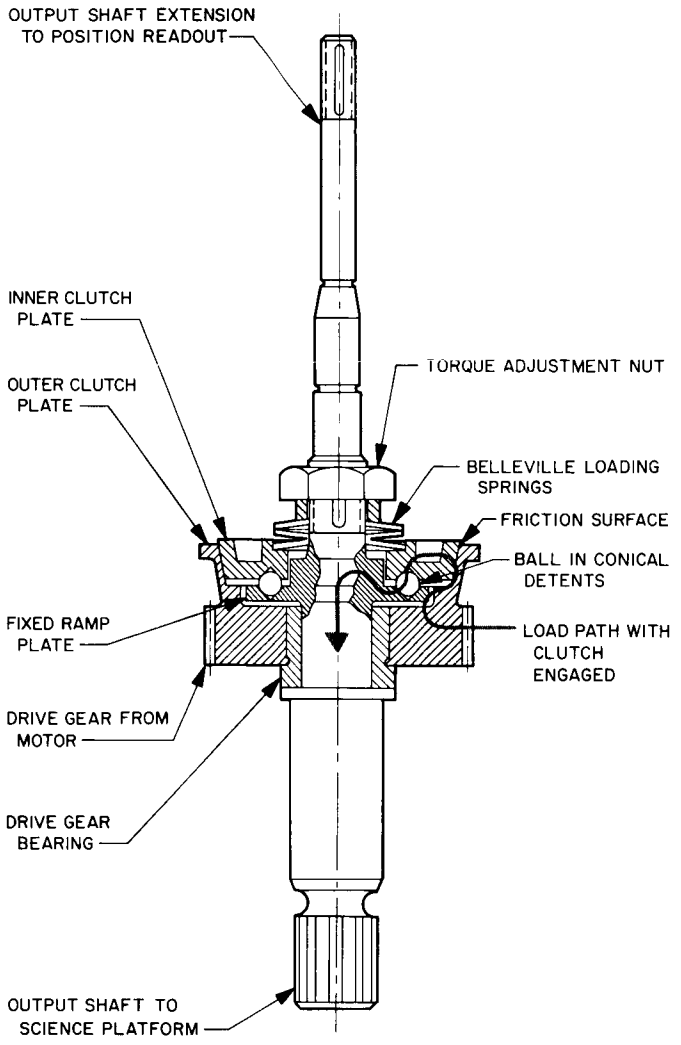

Fig. 6. Section view of clutch assembly

through the balls overcomes the spring preload and slipping occurs at the clutch surfaces. If the input torque is further increased, the effect is to further separate the clutch surfaces, and an equilibrium is reached where throughput torque is a constant. The value at which this torque limiting occurs is adjusted by Belleville spring preload.

The theoretical advantage of a variable-separation friction surface clutch over the conventional preloaded friction plates is the relative insensitivity of the former to breakaway friction. To realize this advantage, however, it had to be proven that this design operated in a stable manner and did not induce feedback in the form of "chatter." Testing of the prototype assembly verified proper operation, proving the design philosophy and justifying the selection of nickel-plating against chrome-plating as a friction surface combination. In conjunction, the detail mechanization of detent ramp angle and clutch surface angle proved compatible for stable control of slippage.

3. Gears

Prior to the fabrication of the scan actuator, a series of tests indicated that anodized 2024 aluminum gears running on electroless nickel-plated 303 stainless steel gears without lubrication was a favorable combination. As an added safety factor the gears were further protected by electrofilm dry lubricant on the aluminum gears of the aluminum-stainless steel running combination. In keeping with the quality control requirements, all purchased gears were red-line inspected to Class 2 precision prior to and following assembly on their respective shafts.

4. Bearings and Seals

The bearings used in the actuator, with the exception of the output shaft bushing, were phenolic separator, Class 7, ball bearings. Each bearing and separator was vacuum-impregnated with F-50 silicone oil. A torque trace of each bearing was required from the vendor to insure 100% inspection. To prevent brinelling during vibration, the lower end of the output shaft was supported in a teflon compound bushing rather than a ball bearing.

The output shaft was pressure-sealed by two viton quadrings spaced 0.050 in. apart. When coated with F-50 silicone oil, the quadrings, with the void between filled with oil, provide a labyrinth-type seal. The gear housing cover was sealed with viton O-rings around the electrical connector and separation plane. A glass header-type electrical connector was used to prevent leakage.

5. Scan Reversal Interface

The scan angle required of the actuator was ±90 deg from a center position. A set of cam-operated microswitches pulse the scan logic system at each limit, thus reversing the direction of the scan. At each limit there were two microswitches, the first of which was closed at the ±90-deg limit and the second of which acted as a backup and closed a few degrees beyond the ±90-deg limit. The switches used were hermetically sealed units capable of operating in a vacuum. The cam which operated the switches was an integral part of the output shaft, thus was not affected by backlash errors in the reduction gearing.

6. Telemetry Outputs

a. Scan Position. An angular position indication was provided by coupling a potentiometer to the output shaft through a stage of anti-backlash gearing. The potentiometer was capable of reading over 345 deg of rotation. To utilize the full rotation of the potentiometer for 180 deg of output shaft rotation, a 1.8:1 stage of step-up anti-backlash gearing was provided.

b. Pressure and Temperature Environments. To provide engineering pressure and temperature information, transducers were installed internal to the scan actuator. The pressure transducer indicated the effectivity of actuator pressure seals. The actuator assembly was pressurized to 2 atm with dry air to eliminate the possibility of cold-welding compatible materials. Air was used because of its oxygen content, which replenishes the oxide coating on components as it is removed by operation wear. The temperature transducer monitored the internal actuator temperature during the flight cruise mode and temperature rise during motor operation.

Knowledge of the actual operating temperature and of the ability of the case pressure seals to maintain an internal pressure was considered to be valuable in determining the adequacy of the state-of-the-art design. The importance of such information became apparent at the beginning of the design phase when it was realized that, although much of the mechanization was based on the successful *Mariner II* actuator, no flight data were available to extrapolate the adequacy of long-term vacuum storage. Undoubtedly, the inclusion of such information on *Mariner C* will be of value in the design of future pressure-sealed mechanisms.

B. Fabrication Problems

One of the problems encountered during fabrication of the actuator was porosity in the magnesium gear housings. Even though all the housings were machined from the same piece of material, two of the 14 units would not hold pressure for extended periods of time and were thus used as special test units. In addition to the porosity problem, vendor difficulty was experienced in getting an acceptable Dow 7 protective coating on the magnesium gear housings and covers. The majority of the first units delivered were rejected for faulty coatings (which could be removed with the thumbnail) and were stripped and retreated.

Some difficulty was experienced in the fabrication of the clutch plates due to the nickel- and chrome-plating. The plating material would deposit more heavily on the sharp edges of the parts, thus preventing good surface contact between the clutch surfaces. These parts were rejected and refinished by grinding to the correct dimensions following plating.

The entire assembly of the scan actuator was performed under clean room conditions using closely controlled procedures and techniques. Unfamiliarity with clean room procedures caused some problems in the early stages of fabrication, but these difficulties were soon overcome and the operation became quite effective following the fabrication of the first prototype units.

C. Actuator Tests

Environmental testing was performed in accordance with JPL Spec. MCS-31599-ETS, with only one unit failing to pass the requirements. This unit failed to maintain pressure following the test sequence; however, this failure was found to be attributable to porosity of the gear housing and was not attributable to the tests performed on the unit.

A special test was conducted to determine the deterioration rate of the actuator clutch. The actuator was operated for 24 hr with the initial output torque recorded at 40 in.-lb. At the end of the 24-hr period the torque had decreased to approximately 38 in.-lb. This was considered to be reasonable.

A life test was conducted on the scan actuator by driving a science platform while being subjected to a vacuum of 10^{-6} mm Hg. In the event the actuator should lose pressure during flight, the life test was conducted with the pressure plug removed. Since the vacuum chamber cannot reach the low pressure of the space environment, the actuator was heated to 160°F to speed lubricant evaporation. The actuator was operated for 14 hr each day for 80 days. The position potentiometer output voltage was constantly recorded on a Speedomax recorder to indicate actuator speed changes or erratic operation. No malfunctions were noted during the test.

V. SCIENCE COVER DEVELOPMENT

A. Design Implementation

At the time the science cover requirement was established, detail design was greatly hampered due to the lack of definition of the instrument configurations. A platform mounting interface was agreed upon but the details of the optics for the TV and wide-angle sensor had only been narrowed down to four possible combinations. Therefore, if a cover were to be designed to meet the hardware delivery schedule, the choice had to be made to either: (1) proceed with the design of four separate cover assemblies, optimizing each one to that particular combination of instruments, or (2) provide a basic cover mounting plate sized to handle the envelope of configurations and vary only the attachment required for each instrument. The latter approach was selected. Although the final assembly was not the most ideal, the design approach turned out to be fortuitous, in that, though the selected wide-angle sensor did not satisfy the original interfaces, the resultant effect on the cover design was limited to a revision in the one attachment. The cover as eventually assembled is shown in Fig. 7.

1. Cover Plate

The requirements for the cover plate were basically light weight, low heat loss, and most important, bending stiffness such that boost loads would not be amplified through the cover into the optics assemblies. Inherently, a honeycomb structure satisfies these criteria and a bonded aluminum honeycomb sandwich was selected. It should be mentioned, however, that the number of threaded fittings necessary for this configuration tended to degrade the weight/stiffness ratio considerably, with the resultant structural efficiency being only slightly superior to more standard fabrication techniques. Flat plate honeycomb fabrication did not appear to be sufficiently complex to eliminate it on that basis.

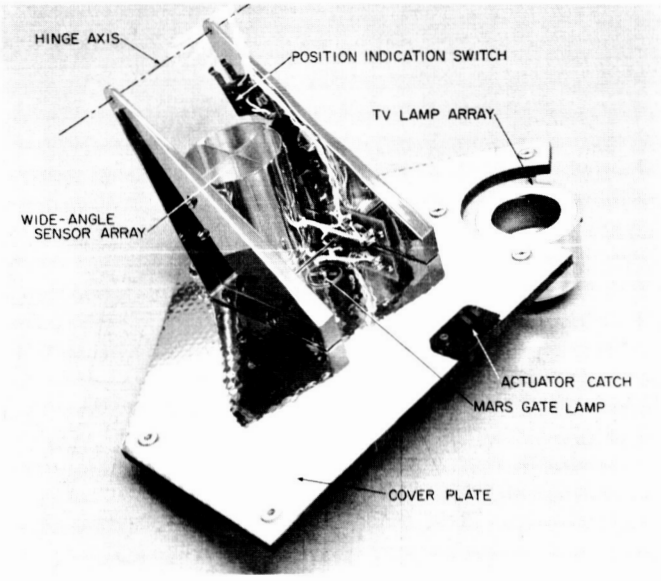

Fig. 7. Science cover assembly

The materials used consisted of a $^{3}/_{16}$-in. hex honeycomb core of 0.0007-in.-thick aluminum alloy. The cover sheets were 0.004-in.-thick aluminum alloy bonded to the core using Metalbond 406 adhesive and cured in temperature cycles up to 350°F. Epon 913 adhesive was used as fill in insert locations and around the edge of the plate.

2. Hinge Hardware

The hinge bearings chosen were a stock item No. 10-32 threaded shank monoball rod ends with a material substitution of A-286 corrosion resistant steel for nonmagnetic considerations. The monoball liner consisted of a fiberglass-teflon weave of the type successfully used on the *Mariner II* spacecraft in a similar application. A bearing run-in procedure was utilized to insure low friction with a 3 in.-oz maximum breakaway torque being reasonably achieved. Alignment of the cover hinge axis was easily accomplished by threading the two monoballs in unequal turns as required on assembly.

Clock springs of 0.016-in. "Elgiloy" nonmagnetic spring material were used to provide the cover opening force. Molybdenum disulfide dry lube was deposited on the spring material to guarantee a resistance to cold-welding when the spring was preloaded. Since in-flight actuation was zero-g, the spring preload needed only to overcome bearing friction and cable resistance. However, ground testing requirements gave a considerable margin to this value, resulting in a specified spring torque of 24 in.-oz per spring in the latched position. Such a large torque thus allowed each spring the capability of reliably operating the cover in the event that a spring failure should occur.

With the highly overpowered opening springs, full cover deployment in zero-g could occur in less than 1 sec, thus making it necessary to provide a semielastic end-of-travel stop. This was accomplished by a pair of flat beryllium-copper springs mounted near the hinge

points such that contact with the cover was made in the near-open position. Elastic rebound was quickly damped in one or two cycles with the energy being sufficiently dissipated in sliding contact between the hinge and spring.

3. Lens Cover Assembly

In general, the individual lens cover housings consisted of a 0.020-in.-thick double-walled aluminum shell such as the TV cover assembly shown in Fig. 8. Double-filament bulbs were mounted in teflon inserts with blocking diodes and terminal boards mounted on the back side of the inner shell. To protect the optics from outgassed deposits from the adhesives and conformal coatings used, an outer shell was utilized. In the case of the TV cup, a viton bumper was attached to provide the required stray light shielding, yet was flexible enough not to transmit vibration loads from the cover to the optics assembly. The housing used for the wide-angle planet sensor was similar with the exception of lamp location and the use of quadrant baffles to sequence the areas illuminated.

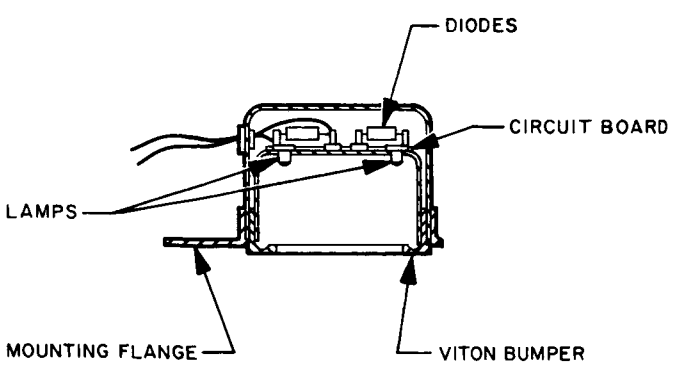

Fig. 8. TV light array assembly

To complete the science cover assembly, the individual lens covers were attached to the cover plate and the pigtail wiring routed to a terminal board on the hinge leg. A plug-in harness to the platform was attached at this point with a service loop across the hinge axis. A three-wire system through the umbilical supplied the cover lights with power. Light sequencing was accomplished by reversing the polarity of the DC source to various wire pairs in conjunction with the cover-mounted blocking diodes.

4. Cover Latch and Latch Actuator

The importance of reliability of actuation to the success of the mission required the cover latch and actuator to be as foolproof, overdesigned, and redundant as possible. To this end, large performance margins were utilized in all components. The latch itself consisted of a simple over-center linkage powered by dual dry-film coated stainless springs. Link pivots were dry-film coated stainless shafts in aluminum housings with side clearance adjusted with teflon washers. The springs, when in the on-center position, generated approximately 13 lb force with the required over-center motion set at 2 lb to trigger.

The primary latch actuator was chosen to be a tractive magnet, push-type solenoid after some consideration of the usability of pyrotechnics. The simple solenoid appeared to satisfy the performance criteria, had inherent long vacuum storage capability, was compatible with the capacitor discharge pyrotechnic power supply, and — most important — could utilize a much simplified reliability test program as compared to a single-shot pyrotechnic device.

To be compatible with the power input available, the solenoid's minimum performance would necessarily be 2 lb force at the start of a 0.090-in. stroke when subjected to a capacitor discharge of 4000 μf at 26 v. Therefore, to allow performance margin, the minimum acceptance criteria was established as 3 lb minimum force at 20 v. As finally tested, the solenoid was capable of 3.8 lb force at 20 v and 5.8 lb force at the rated 26-v capacitor charge voltage or approximately three times the required latch actuation force.

Total solenoid weight was set at 4.5 oz with a maximum allowable armature weight of 0.25 oz limited by the dynamic force to unlatch during vibration. Intuitive concern for the magnetic properties of a solenoid was relieved by the closed field design, which resulted in a measured 6γ at 1 ft, thus satisfying the flight equipment specification.

In case of failure in an element of the solenoid circuit, a mechanical backup was provided as an unrelated secondary release. The mechanization chosen consisted of a spring-loaded lanyard plunger which would be automatically tripped when the scan platform rotated. The usual material selection for vacuum use was considered and the spring was sized to account for the possibility of the primary failure being a hang-up of the solenoid armature. The resultant configuration, as depicted in Fig. 9, thus allowed nearly complete redundancy with performance margins capable of accounting for any reasonably conceived failure modes.

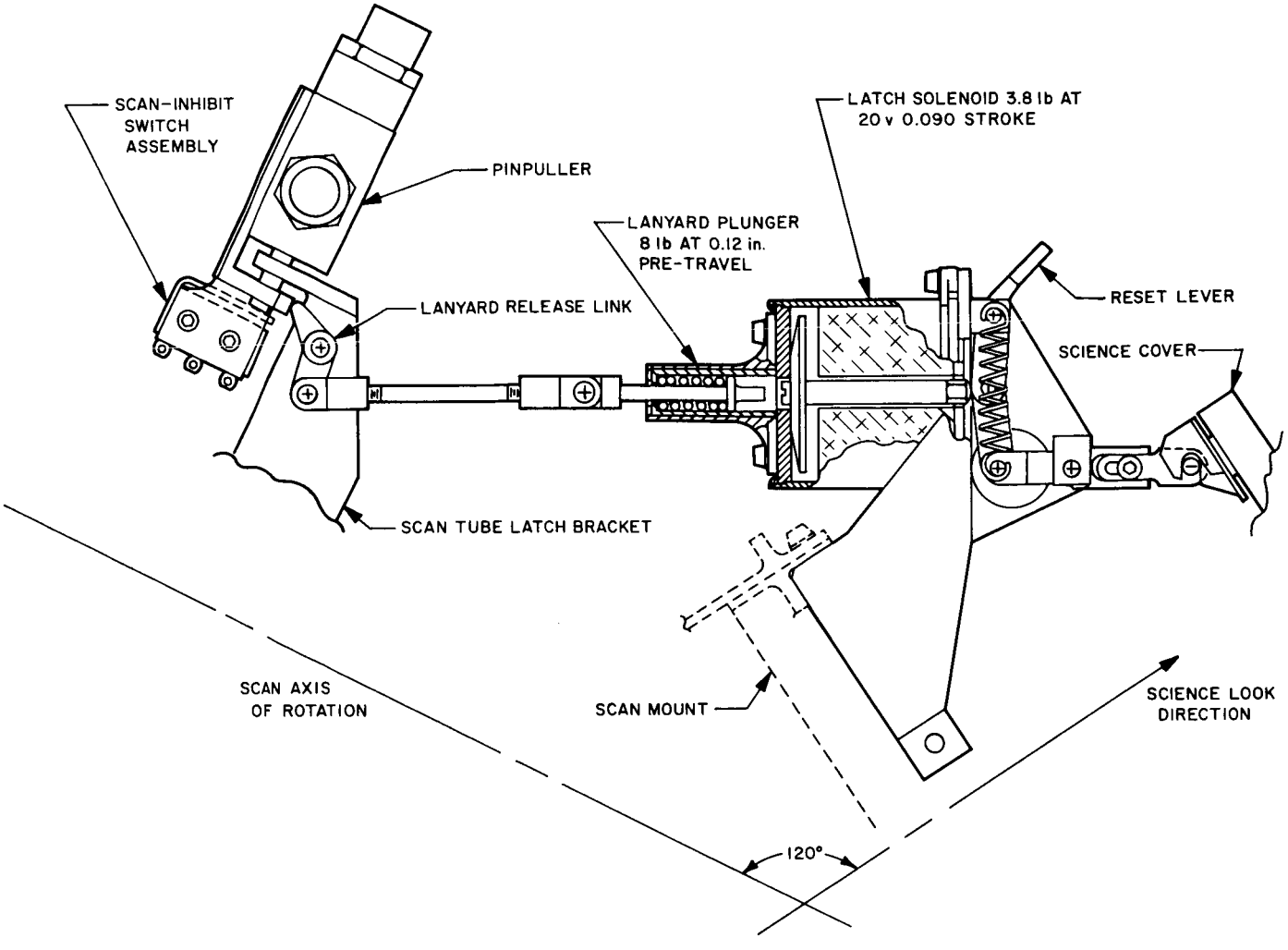

Fig. 9. Cover latch and lanyard assembly

5. Cover Position Telemetry

Information as to the position of the science cover was important to several in-flight decisions. The first failure mode to be considered was the possibility of inadvertent deployment during boost. If such a failure occurred, the midcourse correction would have to be performed utilizing a maneuver which would not allow incident or direct sunlight on the science instrument optics. Since data encoder event telemetry during boost could be inconclusive, the failure mode considered implies the use of a regularly sampled telemetry channel.

A second failure mode requiring cover position information could occur at planet encounter where it would become necessary to identify proper actuation during the normal flight sequence. Backup command to deploy was available which would recycle the sequence but the decision to do so would have to be based on flight data supplied by this telemetry channel.

To mechanize the telemetry indication, a hermetically sealed microswitch was mounted on one leg of the science cover located such that it would actuate with the cover in the deployed position. Ballast resistors were attached across the normally open and normally closed terminals such that an approximate 20-Ω step in the 500- to 600-Ω telemetry input would occur when actuated. This scheme thus allowed the telemetry channel to be used for normal telemetry information with the cover indication being a known offset in the data.

B. Fabrication Problems

The aluminum honeycomb plate, originally thought to involve a straightforward fabrication process, became

involved in a series of problems which resulted in a costly loss of development time. For the most part, the problems were a result of substandard fabrication by the vendor which was not caught during inspection; however, a few were the direct result of the honeycomb design. In retrospect, the decision to use aluminum honeycomb in the future must be tempered by a more thorough study of the application, fabrication methods, and vendor competence.

1. Threaded Insert Installation

During initial vibration tests of the science cover assembly, both as a separate unit and as assembled on a complete test vehicle, catastrophic failure occurred when the latch attachment fittings in the cover plate pulled through. Upon inspection, it was noted that core fill and insert bonding were not done as specified; in fact, they were not done at all. An example of this failure is shown in Fig. 10. A check of the cover plates on hand revealed that the entire lot had not been fabricated per print. An alternate vendor was selected and increased quality control measures were introduced to insure proper fabrication. As a backup, minor changes were incorporated in the attach fittings and support structure to provide a safety margin on the inserts' load-carrying ability.

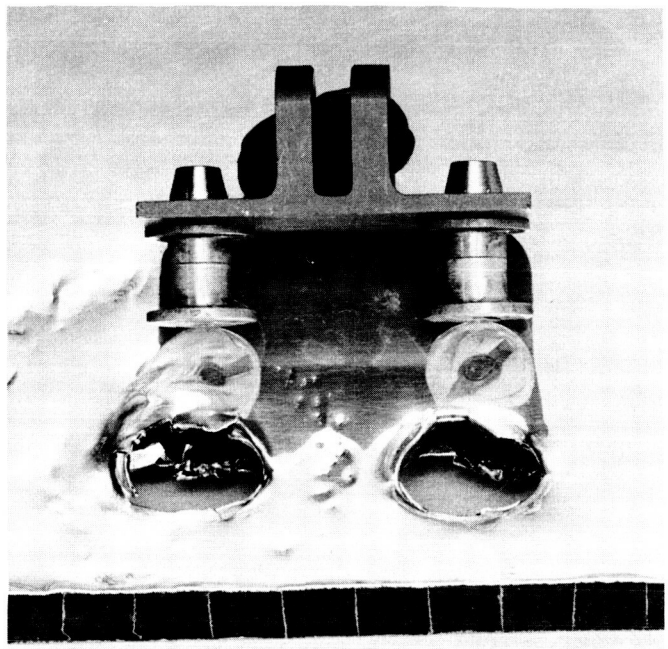

Fig. 10. Cover honeycomb insert failure

2. Skin Delamination

One improvement incorporated for the second run of covers consisted of an adhesive call-out change to one capable of withstanding higher temperature. This was felt necessary after a check on the possible transient solar heat input as a result of a midcourse maneuver. The revised adhesive curing procedure resulted in internal pressure capable of producing skin delamination as illustrated in Fig. 11. Judging by the location of the damaged area, it appeared that the insert fill adhesive was outgassing at a sufficiently high rate during cure that the pressure could not be adequately vented through the perforated core. After some revision in the method of heat application, this problem was resolved.

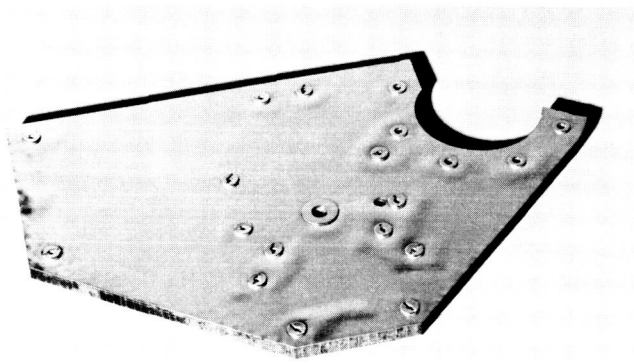

Fig. 11. Cover skin delamination

3. Outgas Contamination

A final problem discovered late in the schedule was the result of a routine check for entrapped volatiles which would possibly outgas and contaminate the science optics. The first cover plate subjected to the vacuum-temperature cycle outgassed a sufficient quantity to form actual droplets on the condensation plate. Analysis of the condensate indicated it to be a hydrocarbon which was traced to an inadequate control of cleanliness during the fabrication process. Since time did not allow another vendor iteration, the existing cover plates were removed from the flight hardware assemblies and subjected to a number of vacuum-temperature outgassing cycles. The procedure was repeated until no measurable loss of weight in the cover plate was evident. It should be mentioned that the previous vendor's honeycomb, although not of flight quality in other respects, did not exhibit this gross contamination.

C. *Science Cover and Latch Tests*

Qualification of the latch and cover assembly prior to spacecraft delivery consisted of a series of environmental

and performance tests specified in JPL Spec. No. MCS-50125-ETS. Briefly, these tests were conducted in the following sequence: (1) performance testing where the solenoid was cycled in a vacuum at various temperature extremes, assembled to the latch and recycled, then assembled to a cover and repeatedly unlatched in a vacuum using both actuator and lanyard backup; (2) subjecting the assembly to the general environmental specification consisting of humidity storage, shock, static acceleration, low frequency vibration, and high frequency complex wave vibration; and (3) repeating the above performance tests for the completed assembly.

In addition, although not considered a qualification test, one spare solenoid and one complete assembly were subjected to a vacuum-temperature life test with the chamber environment held at 130°F and approximately 10^{-6} mm Hg. The solenoid was cycled once a day against a plunger preload with an end-of-stroke indicator to verify actuation. The science cover assembly with a separate solenoid and latch was allowed to soak for varying time periods from 15 to 30 days and then actuated. At the completion of the 180-day test cycle no failures were noted.

Instrumenting the honeycomb science cover during thermal testing yielded interesting results which affected the choice of adhesives. Due to the poor conduction coupling to the platform and the fact that the large radiating surface was directed to space, the resultant cruise temperature was approximately −70°F. On the other hand, because of the small thermal mass, temperatures during a midcourse maneuver toward the Sun could result in transients in excess of +350°F. To allow for such an environment, it was imperative that the honeycomb core be properly vented and a high-temperature adhesive be utilized.

Performance of the assembly during the initial qualification tests was hampered by the previously mentioned fabrication problem with the honeycomb plate. The lack of proper insert bonding exhibited itself during the first high-frequency complex wave vibration where the inserts proceeded to work loose, allowing high excursions and eventual destruction of the cover hinges and latch fittings. Following the incorporation of properly fabricated hardware, qualification proceeded with no failures noted in any developmental or flight hardware test.

A concern, which was dispelled by test, was the ability of the cover-mounted lamps to withstand vibration. Although these lamps were not required to function during flight, it was necessary for them to survive ground testing if they were to be used as a reliable means for on-pad checkout. The result of many tests disclosed that, even in the catastrophic cover failure example, no lamps failed due to vibration.

VI. INTEGRATED SYSTEM TESTING

Complete systems tests were conducted with the platform, actuator, science and cover installed on the flight spacecraft and subjected to operational tests to determine functional adequacy. Simulated flight sequences were performed to determine if the basic design goals were achieved: (1) proper operation of the actuator, using the flight instruments and providing proper scan motion; and (2) capability of the science cover and latch assembly of performing their proper functions of actuation, using flight pyrotechnic power supplies and instrument calibration by means of the cover lamp array. As a consequence of this test program, several minor incompatibilities were uncovered which were quickly resolved allowing complete acceptance of the subsystem.

A. Bearing Chatter

During an encounter scan sequence test on the third flight spacecraft, it was noted that the scan motion appeared to be erratic, or jerky, and would occasionally

stop completely. Disassembly and inspection of the bearings verified that the upper bearing was out of tolerance due to an out-of-round condition; the resultant minor diameter being a line-to-line fit with the scan tube. Further inspection indicated that the cause was an elliptical bearing bore in the support structure which forced the bearing insert out-of-round on assembly. A similar condition was noted on the fourth flight spacecraft, but was not causing improper operation. A resizing hone was fabricated and the bearings were successfully honed and burnished in place.

Although following rework, all assemblies operated properly, it was postulated that perhaps humidity may affect coefficient of friction in the bearing liner. This appeared logical since the bearing exhibiting erratic performance had successfully completed tests in a vacuum. To determine whether the bearings were indeed hygroscopic, a short test was conducted on a developmental platform in a humidity chamber with constant temperature. Test results indicated a rather dramatic correlation; the torque increased from 2.5 in.-lb at 20% humidity to 9.5 in.-lb at 80% humidity. Inspection of the torque graph also revealed eight times the torque fluctuation at the higher humidity. Reruns at a low humidity following 80% humidity operation repeated the original data closely. In conclusion, although it was obvious that bearing friction was a function of humidity, resizing the bearings to tolerance allowed system checkout, and humidity factors could be neglected for flight environment.

B. Science Cover

The cover geometry proved to be compatible with the science instruments; latch actuation, both by pyrotechnic command and lanyard backup, functioned properly on all spacecraft. The only incompatibility noted during this series of systems tests occurred when it was discovered that the light intensity of the TV lamp array was not adequate in some cases. This problem was not immediately apparent since test personnel had chosen to apply overvoltage to these lamps to obtain proper intensity rather than identify a need for revision. A subsequent high incidence of lamp failure eventually made the problem known and higher intensity lamps were substituted. No failures occurred following this revision.

C. Scan-Inhibit Switch

The inherent lack of lever overtravel on the scan-inhibit telemetry switch proved to be somewhat of a nuisance during systems test, resulting in an occasional failure to indicate actuation to the data encoder. Adjustment had been provided in the switch assembly to account for the tolerance on pinpuller pin length, but the requirement to readjust and check switch position prior to each of the numerous actuations caused some difficulty and an occasional misadjustment. Although this problem could have been remedied by redesign, the schedule would not permit it; therefore, it was necessary to exercise considerable caution during each pinpuller installation procedure to insure reliable operation.

VII. FLIGHT EXPERIENCE

During the launch of *Mariner III*, although injection was unsuccessful, proper operation was indicated to the degree telemetry could be analyzed. Event register readings verified that the scan platform pinpuller had unlatched, and a ground command to actuate the science cover was successful, with cover deployment being verified in the telemetry.

The second launch, *Mariner IV*, has completed its mission with all scan platform and actuator hardware having operated properly. Immediately following injection, the scan-inhibit switch verified proper actuation of the pinpuller. At launch +75 days, commands were sent to actuate the science cover and exercise the scan system. Ten full scan cycles, or 2 hr of scan operation, were run with all elements operating properly. Verification of cover deployment was received and readings on scan actuator pressure indicated a 0.7-psi loss since prelaunch checkout. Plots of scan platform position versus time demonstrated smooth, chatter-free operation with a measured scan speed

of 0.505 deg/sec. All scan reversals were accomplished on the primary limit switches since each of the reversals occurred at the proper limiting positions. Backup switches were not used.

At Mars encounter, launch +229 days, the scan system was again operated for approximately 2 hr with no measurable change in performance. Although the science cover had been deployed previously, telemetry indication verified that solenoid current had been applied properly. The operating temperature of the TV was measured as 21°F during encounter, which was well within the allowable range and verified the adequacy of the thermal environment. The use of standard O-ring sealing techniques on the actuator output shaft was also proven adequate based on the measured 0.7-psi temperature-corrected loss at launch +75 days and a quite acceptable 2.9-psi loss from the original 29.5-psi fill pressure as measured at launch +229 days. Operation with such a leak rate could have been accommodated for a considerably longer period of time with high confidence in the unit's reliability.

VIII. CONCLUSIONS

All scan platform hardware has successfully completed the outlined test programs, and flight experience on *Mariner IV* indicates that the system has adequately performed its function. The general conclusion that must be drawn is that the design has satisfied its goals. In retrospect, there are some points which appear to be a fair design optimization, and other points which, if the scan platform were to be redesigned, would be changed.

The scan actuator employed straightforward, conservative design features which minimized development time. The use of standard spur gearing and commercially available bearings, seals, and lubrication was a logical choice for the application and allowed quick personnel familiarization with the unit during assembly and test. Consideration of more sophisticated techniques in future actuator designs would have to be shown to provide significant improvement in the device's ability to meet the requirements of the application before they would be a reasonable tradeoff with experience.

The scan platform mount, considering the constraints on instrument location, resulted in an efficient structural weight of less than 2 lb. The design philosophy of assembly procedure and tolerances to allow automatic sensor alignment during installation gave the assembly much flexibility allowing the complete assembly or any part of the assembly to be replaced without time-consuming alignment checks. The use of teflon-compounded sleeve bearings offers advantages in simplicity and reliability worthy of consideration. As compared to rolling element bearings, sleeve bearings are less sensitive to tolerances and contamination, allow more freedom in installation procedure, and—the most significant advantage—require no special consideration for lubrication.

A design feature on the science cover latch worthy of note would be the choice of a solenoid to provide the primary unlatching force. As a result of the test program and flight data, it is concluded that solenoids can be tailored to actuate mechanisms reliably with a minimum concern for the vacuum environment. The magnetic field requirement was met and, if a more stringent requirement were introduced, it could be satisfied with a minimum weight of shielding. The alternative of one-shot pyrotechnics in an application requiring such a small actuating force did not display sufficient merit to offset the advantages in reliability to be gained from a device capable of repeated actuations for flight qualification.

Problems which arose during the design and qualification of the system were basically the result of schedule. The science cover offers much room for improvement, both in concept and in detail. The lack of definition of the cover interface requirements resulted in an unavoidable compromise which clearly lacked any semblance of structural optimization. As a by-product of the design, further consideration should be given to the possible problems of honeycomb fabrication as well as the anticipated advantages to the application. The use of hermetically sealed microswitches presented difficulty in the application as a result of their finite lifetime and the lack of sufficient overtravel. An awareness of these characteristics would have altered the detail approach to their utilization.