GPO PRICE $
CFSTI PRICE(S) $
Hard copy (HC) 1.00
Microfiche (MF) .50
ff 653 July 65

ABSTRACT

In-Flight Test to Determine Space Environmental Effects on Friction, Wear, and Lubrication of Materials

by

Harold E. Evans and Edward J. Devine
Goddard Space Flight Center
Greenbelt, Maryland

The objective of this program is to determine the nature of friction (cold welding), wear, and lubrication phenomena in the actual environment of deep space. It is well recognized that increased friction and wear in vacuum are the most serious hazards to mechanical devices in space. A very widespread and costly effort is underway to investigate this problem under laboratory simulation of the space environment. A recent count showed that approximately 100 groups (both government and industry) were studying friction (cold welding), wear, and lubrication. Most of these studies involved vacuum effects. The amount of money involved is substantial and the value of test results questionable.

In view of the large expenditure of resources in this area using laboratory techniques that may or may not be giving valid data, it is felt that the time has come to establish conclusively just what and how bad are the problems in space regarding mechanical components. It may be found that a "mountain" has been made out of a "molehill" and that elaborat

N66-15241
(ACCESSION NUMBER) (THRU)
15 1
(PAGES) (CODE)
TMX-54967 15
(NASA CR OR TMX OR AD NUMBER) (CATEGORY)
FACILITY FORM 602

and costly laboratory tests may not be necessary and hence, pushing the state-of-the-art in laboratory vacuum techniques and test methods may not be warranted. Conversely, it may be found that unless the vacuum tests are conducted in a vacuum of 10^{-12} torr, space simulation in the laboratory may be inadequate. The phenomena of cold welding in space is of wide interest, especially in the manned space effort. Orbital docking, assembly, etc. may be affected by cold welding. These experiments will shed light on just how severe this problem is and what may be done about it. This in-flight experiment will serve an urgent two-fold purpose. First, it will verify laboratory results on the performance of mechanical elements. Secondly, it will permit a better definition of the degree of vacuum required for an adequate simulation of the space environment.

An experiment is outlined which will measure rolling and sliding friction and cold welding effects in orbit. In addition, the actual pressure environment to which the experiment is exposed will be measured. The experiment is designed on a modular basis. That is, it will be made up of several independent modules which may be combined as necessary to fit the final space and power available in the spacecraft. See Figure 1. This experiment consists of the following modules:

(a) One bearing test module.

This device will test a sample of 8 instrument bearings under load and measure torque and time to failure. See Figures 2 - 5.

[redacted]

(b) An option of 1 - 3 friction and wear test modules.

This device will measure the coefficient of friction and wear rate of 6 different combinations of materials. See Figure 6.

(c) One pressure transducer.

This device will measure the total pressure in the vicinity of the experiment. See Figure 7.

The bearing tester (Figure 2) contains four brushless D.C. motors which drive the test bearings at 3000 rpm. This type of motor is also an extremely sensitive and accurate (better than 5%) measurement device since motor current is directly proportional to shaft torque. Bearing test load can be selected from 0 to 5 pounds (axial). All test bearings are directly exposed to the space vacuum. Motor windings and electronics are hermetically sealed to eliminate outgassing which might affect the validity of the experiment. Ten 0-5 volt analog telemetry outputs give bearing torques, condition of the drive motors and temperature of the experiment. Should failure of a drive motor occur, the cause will be positively isolated to bearings, motor, or supply voltage. In event a pair of test bearings exceed a predetermined failure torque, that motor is switched to a low power condition to prevent excessive drain on the satellite power supply. Power required by the experiment is between 2 and 3.5 watts depending upon load and condition of the bearings. Size is 3 x 3 x 8 inches, weight 4 pounds.

Laboratory test of the ball bearing experiment is now underway.

Program details are being presented for the first time before a technical society.

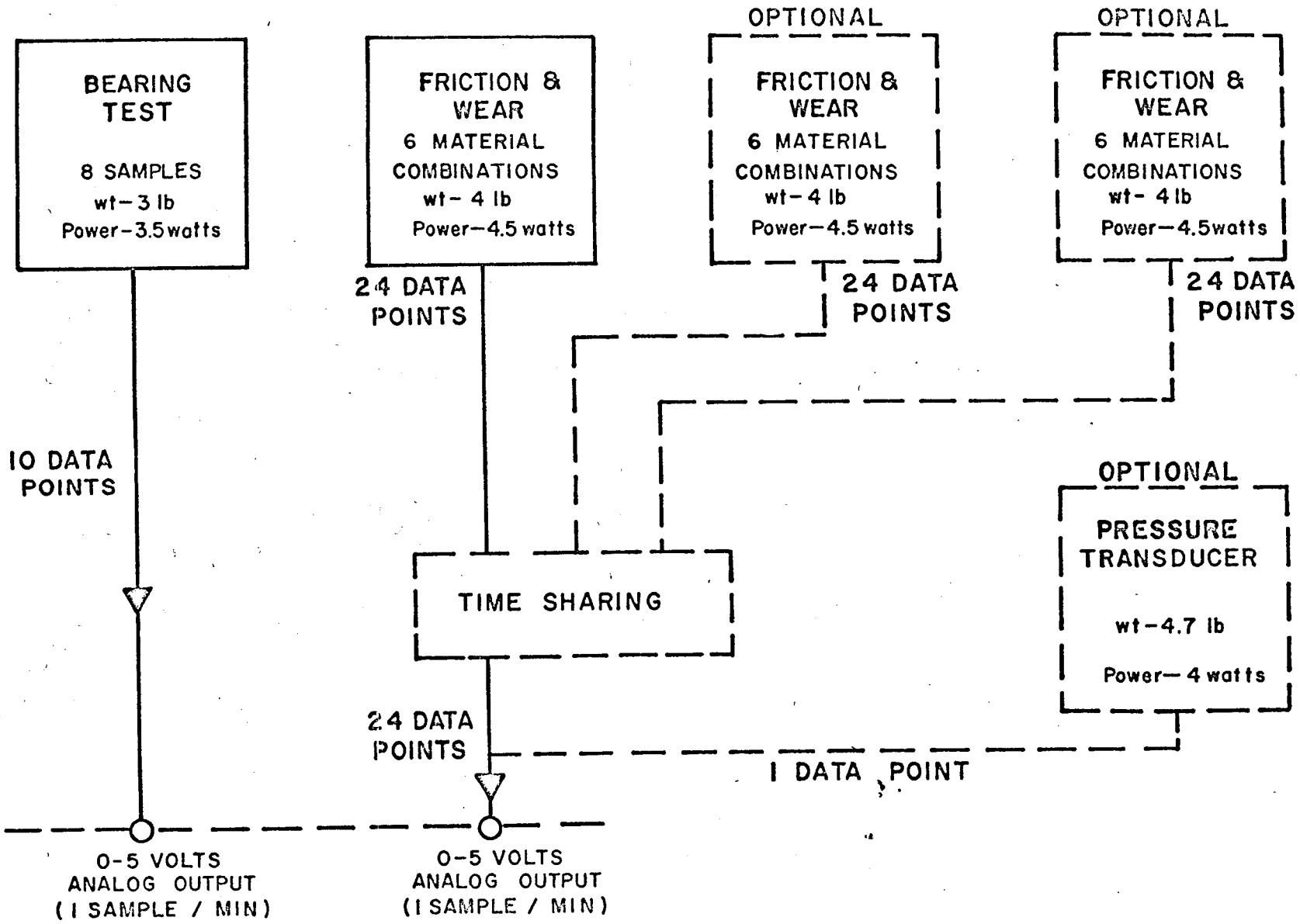

FIGURE 1 PROPOSED IN FLIGHT EXPERIMENT FOR ATS

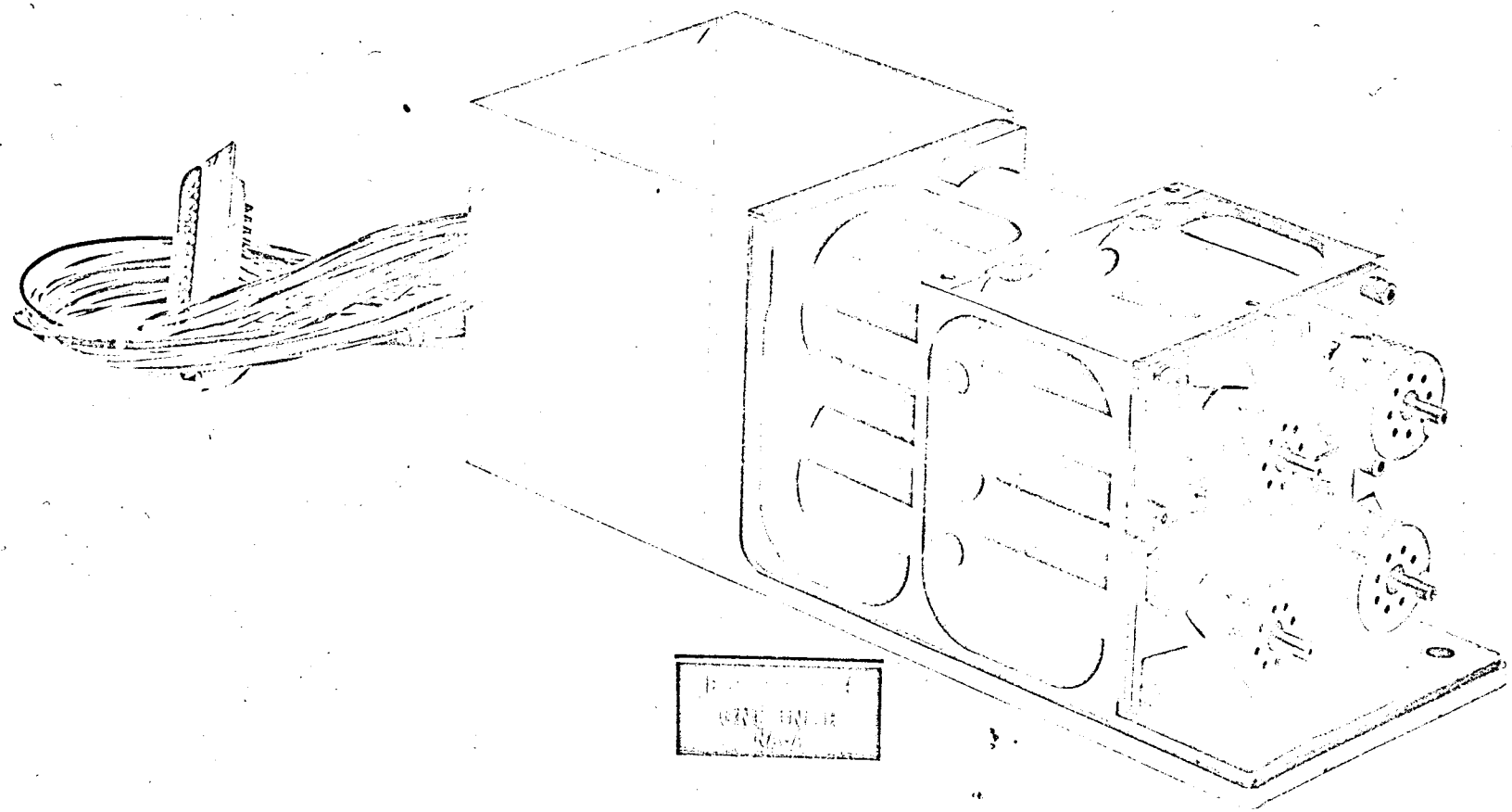

ASA G-652777

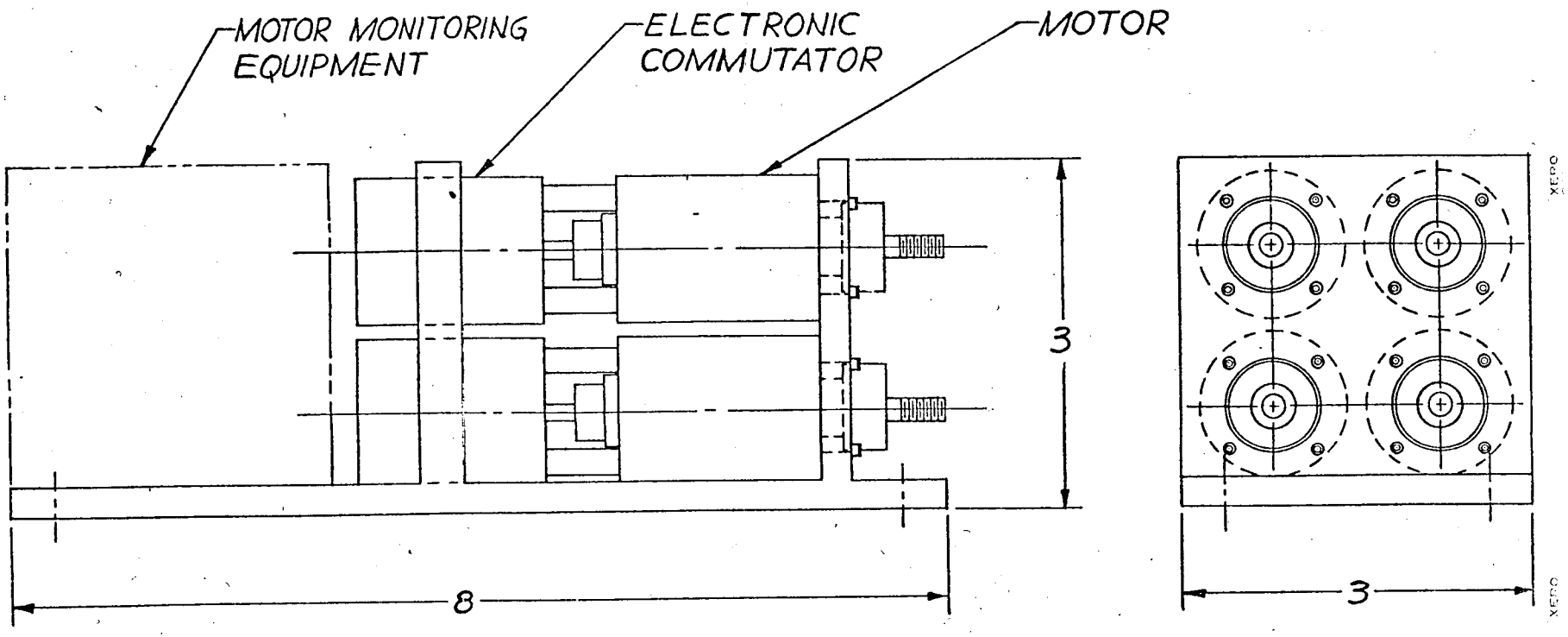

FIGURE 3

BALL BEARING TEST ASSEMBLY

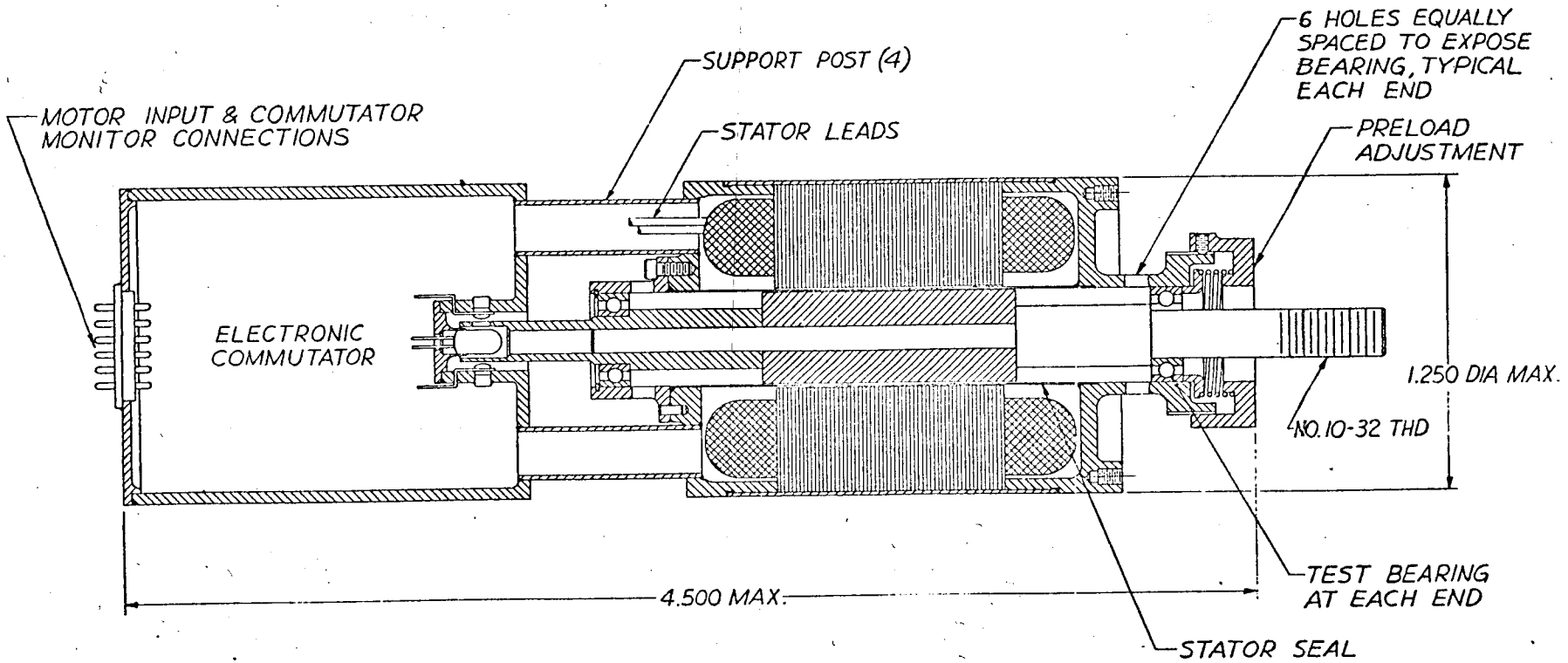

FIGURE 4

BEARING TEST MOTOR

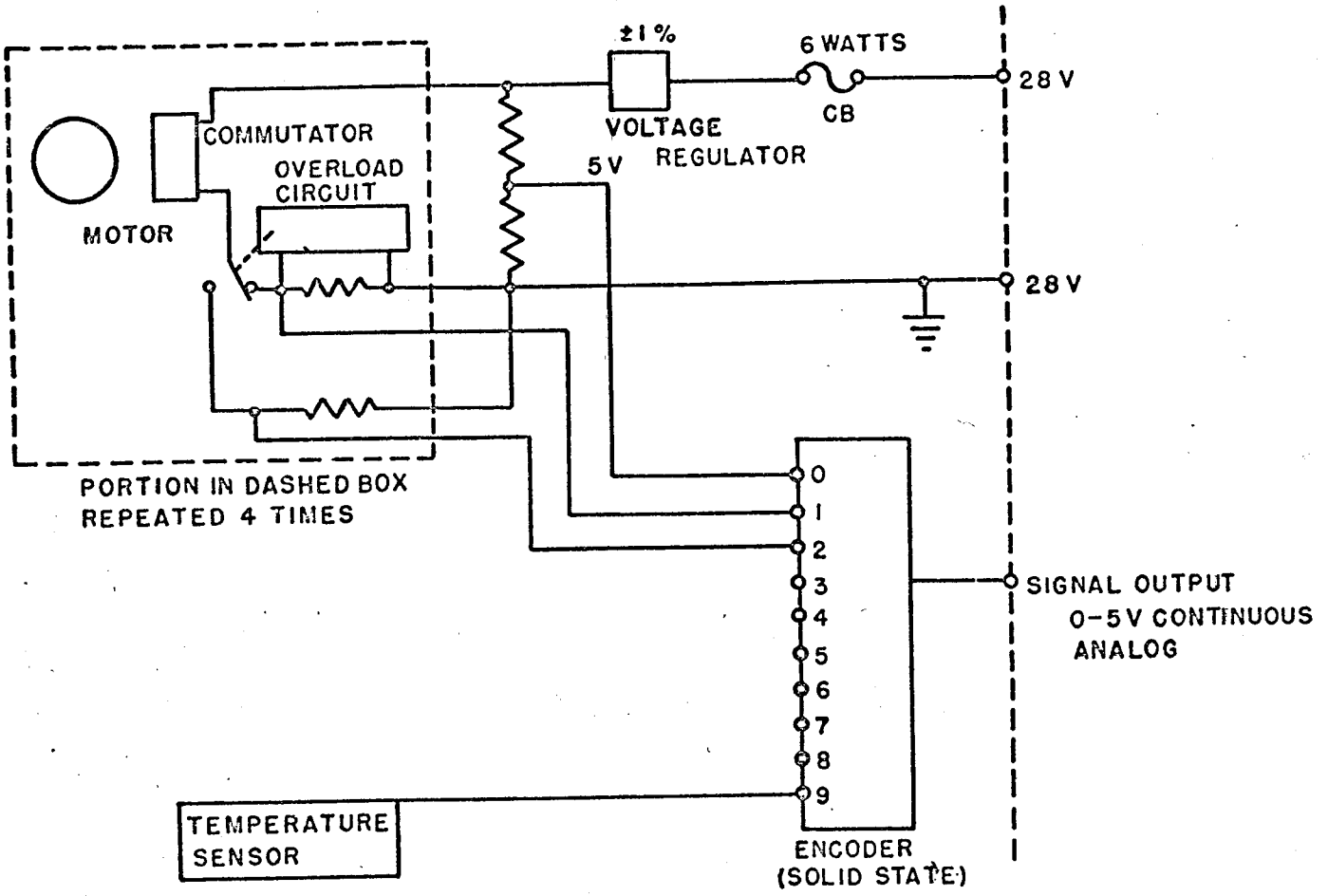

FIGURE 5. BEARING TESTER BLOCK DIAGRAM

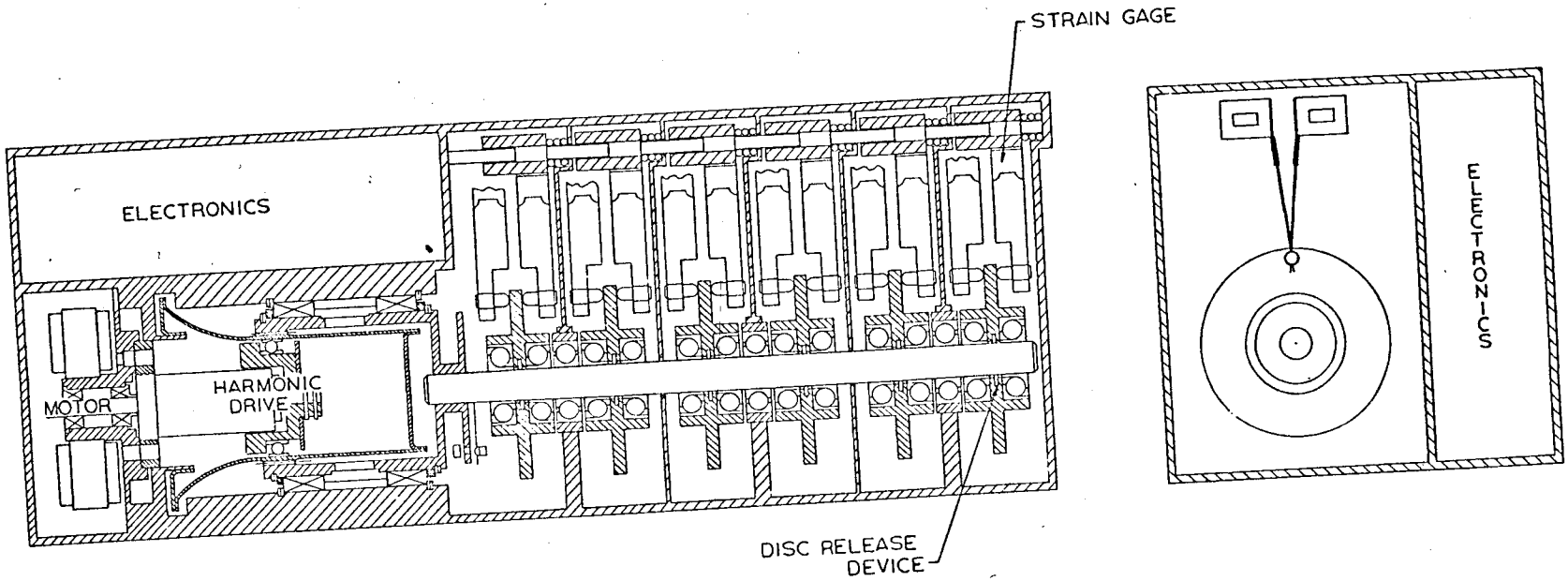

IN FLIGHT FRICTION AND WEAR TEST MODULE

FIGURE 6

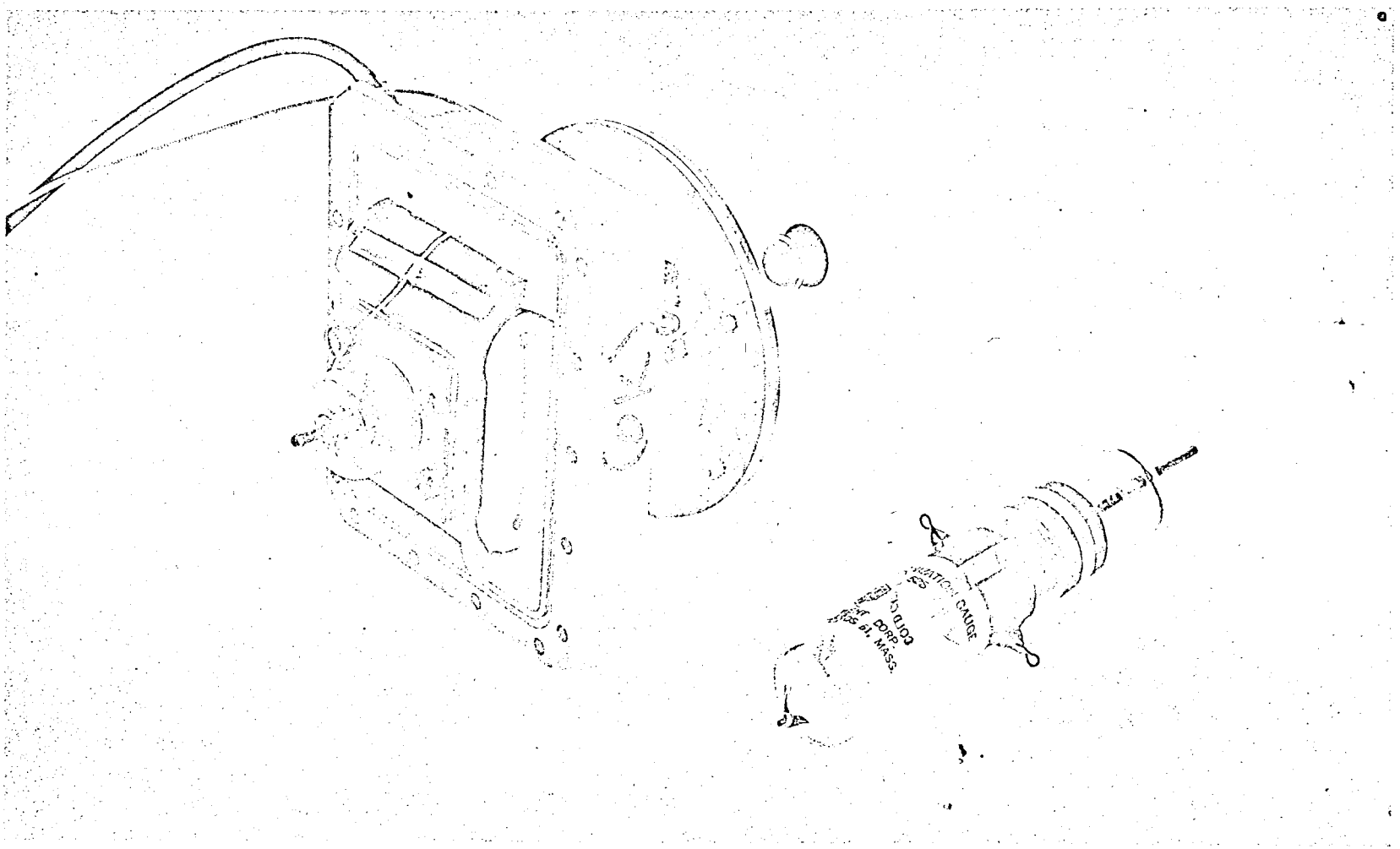

FIGURE 7: PRESSURE TRANSDUCER

XERO COPY