https://ntrs.nasa.gov/search.jsp?R=19660006052 2018-05-25T16:37:29+00:00Z

NASA CONTRACTOR REPORT

NASA CR - 61048

FACILITY FORM 602

N66-15341 (ACCESSION NUMBER) (THRU)

115 (PAGES) 1 (CODE)

(NASA CR OR TMX OR AD NUMBER) 11 (CATEGORY)

NASA CR - 61048

# APOLLO LOGISTICS SUPPORT SYSTEMS MOLAB STUDIES

# DESIGN AND ANALYSIS OF UNLOADING AND TIEDOWN SYSTEMS

Prepared under Contract No. NAS8-11096 by

Jerome E. Ligocki
Glenn J. Youngblood

Space Systems Section
NORTHROP SPACE LABORATORIES
6025 Technology Drive
Huntsville, Alabama

GPO PRICE $ _____

CFSTI PRICE(S) $ _____

Hard copy (HC) 4.00

Microfiche (MF) .75

ff 653 July 65

For

NASA - GEORGE C. MARSHALL SPACE FLIGHT CENTER
Huntsville, Alabama

December 1964

## ABSTRACT

15341

Systems were developed for unloading two lunar surface mobile laboratory (MOLAB) configurations from the LEM truck (LEM/T) to the lunar surface. The MOLAB configurations used were a four wheel and a six wheel semiarticulated vehicle. Preferred unloading systems and alternates having varying degrees of azimuth capability were developed for each of the two vehicles. The azimuth capabilities considered were; 1) single fixed direction 2) two directions ($180^\circ$ apart) 3) $\pm 45^\circ$ from the vehicles longitudinal centerline and 4) $0\text{-}360^\circ$ multiazimuth. Weights of each of the unloading systems are given. In addition, structural systems for securing the MOLAB vehicles to the LEM/T from launch to lunar landing were developed. The weights of these systems are also given.

Author

CR-61048

# APOLLO LOGISTICS SUPPORT SYSTEMS
# MOLAB STUDIES

## TASK ORDER N-39 REPORT ON
## DESIGN AND ANALYSIS OF UNLOADING AND
## TIEDOWN SYSTEMS

By

Jerome E. Ligocki
Glenn J. Youngblood

**Distribution of this report is provided in the interest of information exchange. Responsibility for the contents resides in the author or organization that prepared it.**

Prepared under Contract NAS 8-11096 by

Space Systems Section
NORTHROP SPACE LABORATORIES
6025 Technology Drive
Huntsville, Alabama

For

Advanced Studies Office
PROPULSION AND VEHICLE ENGINEERING LABORATORY

NASA-GEORGE C. MARSHALL SPACE FLIGHT CENTER

# PREFACE

This report was prepared by the Northrop Space Laboratories (NSL), Huntsville Department, for the George C. Marshall Space Flight Center under authorization of Task Order N-39, Contract NAS8-11096. The NASA Technical Representatives were Messrs Charles R. Darwin and John C. Rains of the MSFC Propulsion and Vehicle Engineering Laboratory (R-P&VE-AB).

The work completed represents a twenty-six (26) man-week effort commencing on 1 October 1964, and ending 7 December 1964.

The contributions of Messrs. D. Coughlan and D. Dreier of Northrop Space Laboratories are gratefully acknowledged.

TABLE OF CONTENTS


| SECTION | | PAGE |
|---|---|---|
| | SUMMARY | 1 |
| 1.0 | INTRODUCTION | 2 |
| 2.0 | OBJECTIVES | 3 |
| 3.0 | AES PAYLOAD CONFIGURATIONS CONSIDERED IN THIS STUDY | 4 |
| | 3.1 FOUR WHEEL VEHICLE CONFIGURATION | 4 |
| | 3.2 SIX WHEEL SEMIARTICULATED VEHICLE | 4 |
| 4.0 | RESTRAINTS AND ASSUMPTIONS | 10 |
| 5.0 | DESIGN REQUIREMENTS | 11 |
| | 5.1 GENERAL REQUIREMENTS | 11 |
| | 5.2 ENVIRONMENTAL REQUIREMENTS | 12 |
| | 5.3 STRUCTURAL REQUIREMENTS | 12 |
| 6.0 | DESIGN APPROACH AND SELECTION CRITERIA | 13 |
| 7.0 | INTERFACE CONSIDERATIONS | 19 |
| | 7.1 AES PAYLOAD ENVELOPE/UNLOADING EQUIPMENT INTERFACE | 19 |
| | 7.2 LEM TRUCK/MOLAB INTERFACE | 19 |
| | 7.3 LUNAR SURFACE/UNLOADING TRACK INTERFACE | 23 |
| | 7.4 TELECOMMUNICATION AND CONTROL INTERFACE | 23 |
| 8.0 | PARAMETRIC STUDIES | 24 |
| | 8.1 PAYLOAD STABILITY | 24 |
| | 8.2 LEM/TRUCK-MOLAB STABILITY | 24 |
| | 8.3 TRACK LENGTH | 25 |
| | 8.4 RELATIVE BENDING AND TORSIONAL EFFICIENCIES OF BEAM CROSS SECTIONS | 28 |
| 9.0 | CONCEPTUAL DESIGN | 30 |
| | 9.1 UNLOADING SYSTEM IDENTIFICATION NUMBERS | 30 |
| | 9.2 FOUR WHEEL VEHICLE UNLOADING SYSTEMS | 30 |
| | 9.2.1 UNLOADING SEQUENCE | 31 |
| | 9.2.2 SINGLE DIRECTION UNLOADING SYSTEMS | 32 |
| | 9.2.3 TWO DIRECTION (180° APART) UNLOADING SYSTEM | 39 |
| | 9.2.4 FULL OR 360° AZIMUTH UNLOADING SYSTEMS | 39 |

SECTION PAGE


9.2.5 0° TO ±45° AZIMUTH UNLOADING SYSTEMS 43

9.3 UNLOADING SYSTEMS FOR A SIX WHEEL SEMIARTICULATED VEHICLE 45

9.3.1 SINGLE FIXED AND TWO DIRECTIONAL UNLOADING SYSTEMS (WHEEL TRACKS) 49

9.3.2 MULTIAZIMUTH UNLOADING SYSTEM 0-360° (WHEEL TRACKS) 51

9.3.3 MULTIDIRECTIONAL ±45° UNLOADING SYSTEM (WHEEL TRACKS) 55

9.3.4 SINGLE FIXED AND TWO-DIRECTIONAL UNLOADING SYSTEMS (CHASSIS TRACKS) 55

9.3.5 MULTIAZIMUTH 0-360° UNLOADING SYSTEM (CHASSIS TRACKS) 59

9.3.6 MULTIDIRECTIONAL ±45° UNLOADING SYSTEM (CHASSIS TRACKS) 63

9.3.7 UNLOADING SEQUENCE 63

10.0 RELATED DESIGN ANALYSES 64

10.1 MOLAB VEHICLE STABILITY 64

10.1.1 FOUR WHEEL VEHICLE STABILITY 64

10.1.2 SIX WHEEL VEHICLE STABILITY 64

10.2 LEM/TRUCK STABILITY 66

10.3 UNLOADING CLEARANCES FOR MOLAB 67

10.4 UNLOADING TRACK LENGTHS 67

10.4.1 UNLOADING TRACK LENGTH FOR THE FOUR WHEEL VEHICLE 68

10.4.2 TRACK LENGTH FOR SIX WHEEL VEHICLE 68

10.5 WEIGHT OF UNLOADING AND TIEDOWN EQUIPMENT 72

10.5.1 UNLOADING AND TIEDOWN EQUIPMENT WEIGHT FOR THE FOUR WHEEL VEHICLE 72

10.5.2 UNLOADING AND TIEDOWN EQUIPMENT WEIGHT FOR THE SIX WHEEL VEHICLE 79

11.0 CONCLUSIONS 87

12.0 RECOMMENDATIONS 88

13.0 REFERENCES 89

APPENDIX A - GENERAL DISCUSSION 90

APPENDIX B - LOAD AND STRESS CALCULATIONS FOR THE FOUR WHEEL VEHICLE UNLOADING SYSTEMS 93

SECTION PAGE

APPENDIX C - LOAD AND STRESS CALCULATIONS FOR THE SIX WHEEL VEHICLE UNLOADING SYSTEMS 104

LIST OF FIGURES


| FIGURE | | PAGE |
|---|---|---|
| 3-1 | FOUR WHEEL MOLAB VEHICLE CONCEPT | 5 |
| 3-2 | SIX WHEEL SEMIARTICULATED VEHICLE CONCEPT | 7 |
| 6-1 | TASK METHODOLOGY FOR AES PAYLOAD UNLOADING AND TIEDOWN | 15 |
| 6-2 | FLOW CHART FOR THE UNLOADING AND TIEDOWN SYSTEMS CONSIDERED FOR THE FOUR WHEEL AND THE SIX WHEEL SEMIARTICULATED VEHICLES | 17 |
| 7-1 | AES PAYLOAD ENVELOPE | 20 |
| 7-2 | LEM/TRUCK LAYOUT | 21 |
| 8-1 | LEM/TRUCK STABILITY | 26 |
| 8-2 | UNLOADING TRACK LENGTHS | 27 |
| 9-1 | FOUR WHEEL MOLAB VEHICLE DUAL DIRECTION UNLOADING SYSTEMS (OVERHEAD TRACKS) | 35 |
| 9-2 | FOUR WHEEL MOLAB VEHICLE DUAL DIRECTION UNLOADING SYSTEMS (FOLDING TRACKS) | 37 |
| 9-3 | FOUR WHEEL MOLAB VEHICLE 360° AZIMUTH UNLOADING AND TIEDOWN SYSTEM | 41 |
| 9-4 | TURNTABLE AND PIVOT BEAM CONCEPTUAL DESIGN - 0° TO ±45° AZIMUTH CAPABILITY | 44 |
| 9-5 | TIEDOWN AND UNLOADING SYSTEM SIX WHEEL VEHICLE - 1 OR 2 DIRECTIONS | 47 |
| 9-6 | TIEDOWN AND UNLOADING SYSTEM SIX WHEEL VEHICLE 360° AZIMUTH | 53 |
| 9-7 | TIEDOWN AND UNLOADING SYSTEM VIA CHASSIS TRACKS SIX WHEEL VEHICLE ONE OR TWO DIRECTIONS | 57 |
| 9-8 | TIEDOWN AND UNLOADING SYSTEM VIA CHASSIS TRACKS SIX WHEEL VEHICLE 360° AZIMUTH | 61 |
| 10-1 | FOUR WHEEL VEHICLE GEOMETRY FOR PITCH AND ROLL STABILITY STUDY | 65 |
| 10-2 | CRITERIA FOR UNLOADING TRACK LENGTH | 69 |
| 10-3 | TRACK LENGTHS - CASE I | 70 |
| 10-4 | TRACK LENGTHS - CASE II | 71 |

LIST OF TABLES


| TABLE | | PAGE |
|---|---|---|
| 8-1 | TYPICAL CROSS SECTION PROPERTIES SHOWING RELATIVE BENDING AND TORSIONAL RESISTANCES | 29 |
| 9-1 | VEHICLE UNLOADING SEQUENCE | 49 |
| 10-1 | WEIGHT SUMMARY FOR UNLOADING AND TIEDOWN EQUIPMENT-FOUR WHEEL VEHICLE | 73 |
| 10-2 | WEIGHT TABULATION FOR 4D-1 VEHICLE UNLOADING AND TIEDOWN EQUIPMENT 360° AZIMUTH CAPABILITY (8 ROLLERS) | 74 |
| 10-3 | WEIGHT TABULATION FOR 4D-2 VEHICLE UNLOADING AND TIEDOWN EQUIPMENT 360° AZIMUTH CAPABILITY (INTEGRAL TURNTABLE BEARING) | 75 |
| 10-4 | UNLOADING AND TIEDOWN EQUIPMENT WEIGHT TABULATIONS FOR 4B-1 VEHICLE UNLOADING SYSTEM (TWO DIRECTIONS - OVERHEAD TRACKS) | 76 |
| 10-5 | UNLOADING AND TIEDOWN EQUIPMENT WEIGHT TABULATIONS FOR 4B-2 VEHICLE UNLOADING SYSTEM (TWO DIRECTIONS-FOLDING TRACKS) | 77 |
| 10-6 | WEIGHT TABULATION FOR 4A-1 and 4A-2 VEHICLE UNLOADING AND TIEDOWN EQUIPMENT - SINGLE DIRECTION UNLOADING | 78 |
| 10-7 | WEIGHT SUMMARY FOR UNLOADING AND TIEDOWN EQUIPMENT - 6 WHEEL VEHICLE | 80 |
| 10-8 | WEIGHT TABULATION FOR 6D-1 UNLOADING AND TIEDOWN EQUIPMENT-360° AZIMUTH (CHASSIS TRACKS) | 81 |
| 10-9 | WEIGHT TABULATION FOR 6D-2 UNLOADING AND TIEDOWN EQUIPMENT 360° AZIMUTH (WHEEL TRACKS) | 82 |
| 10-10 | WEIGHT TABULATION FOR 6B-1 UNLOADING AND TIEDOWN EQUIPMENT-TWO DIRECTION (CHASSIS TRACKS) | 83 |

| TABLE | | PAGE |
|---|---|---|
| 10-11 | WEIGHT TABULATION FOR 6B-2 UNLOADING AND TIEDOWN EQUIPMENT-TWO DIRECTION (WHEEL TRACKS) | 84 |
| 10-12 | WEIGHT TABULATION FOR 6A-1 UNLOADING AND TIEDOWN EQUIPMENT-ONE DIRECTION (CHASSIS TRACKS) | 85 |
| 10-13 | WEIGHT TABULATION FOR 6A-2 UNLOADING AND TIEDOWN EQUIPMENT-ONE DIRECTION (WHEEL TRACKS) | 86 |

## NOTATIONS, DEFINITIONS AND SYMBOLS

Definitions of structural load terminology used in this report are given below:

- Limit Load - Limit load is the maximum load calculated to be experienced by the structure under the specified conditions of operation.

- Design Load - The design load is the limit load multiplied by the required factor of safety.

- Load Factor - The factor by which steady state loads are multiplied to obtain the equivalent static effect of dynamic loads.

- Factor of Safety - The factor of safety is defined as the ratio of the criterion load or stress to the limit load or stress.

- Margin of Safety - Indicates the percentage by which the strength of a member exceeds the design load.

The symbols used in this report are defined as follows:

$Q$ = Static Moment of Cross Sectional Area - $(\text{inches})^3$

$Z$ = Section Modulus - $(\text{inches})^3$

$I$ = Plane Moment of Inertia - $(\text{inches})^4$

$w$ = Weight - pounds/foot

$A$ = Cross Sectional Area - $(\text{Inches})^2$

$r$ = Radius of gyration - inches

$b$ = Thickness or height of member - inches

$K, C$ = Torsional factors[1*] dependent upon the form and dimensions of cross section

$M_{max}$ = Maximum Moment (ultimate) - inch pounds

| | | |
|---|---|---|
| $P_{max}$ | = | Maximum Axial Load (ultimate) - pounds |
| $V_{max}$ | = | Maximum Shearing Load (ultimate) - pounds |
| $T_{max}$ | = | Maximum Twisting Moment (ultimate) - inch pounds |
| $f_b$ | = | Calculated Bending Stress - pounds/(inches)$^2$ |
| $f_a$ | = | Calculated Axial Stress - pounds/(inches)$^2$ |
| $f_s$ | = | Calculated Plane or Torsional Shear Stress - pounds/(inches)$^2$ |
| $F_b$ | = | Allowable Bending Stress - pounds/(inches)$^2$ |
| $F_a$ | = | Allowable Axial Stress - pounds/(inches)$^2$ |
| $F_s$ | = | Allowable Shear Stress - pounds/(inches)$^2$ |
| M. S. | = | Margin of Safety |
| Ksi | = | Pounds x $10^3$ per square inch |

*Superscript notations are used to indicate references contained in Section 13.0 of this report.

## SUMMARY

Unloading and tiedown systems have been developed for the remote control unloading of MOLAB from the LEM/Truck to the lunar surface and for securing MOLAB to the LEM/Truck. Two specific MOLAB configurations were considered: (1) a four wheel vehicle, and (2) a six wheel semiarticulated vehicle. Four types of unloading systems, having varying azimuth capabilities, were developed including: (1) single fixed direction, (2) two directions ($180^{\circ}$ apart), (3) $0^{\circ}$ to $\pm 45^{\circ}$ azimuth and (4) full or $360^{\circ}$ azimuth.

Sufficient analyses were performed to insure; (1) adequate structural integrity of the unloading and tiedown systems, (2) MOLAB and LEM/Truck stability during the unloading cycle, (3) MOLAB clearance of the LEM/Truck throughout the unloading cycle and (4) the selected track length permitted unloading, considering the LEM/Truck cargo deck height and the estimated lunar surface slopes and protuberances. Parameter studies are included which allow establishing stability for MOLAB and the LEM/Truck. Track length is also expressed in a general equation which can be used to readily calculate new track lengths as required by system design changes.

The recommended full or $360^{\circ}$ azimuth unloading systems included extendable chassis tracks and turntables for azimuth positioning. The LEM/Truck exhibited negative stability margins when boom systems (mounted to the LEM/Truck) were used to unload MOLAB.

The unloading equipment weight for the recommended concepts varied from approximately 400 pounds for the full azimuth systems to 250 pounds for the one direction unloading system. No significant weight savings were realized for the $0^{\circ}$ to $\pm 45^{\circ}$ azimuth unloading systems, versus the full or $360^{\circ}$ azimuth systems. The weight penalty for unloading systems with varying azimuth capability may be compared with the weight penalties associated with other MOLAB subsystems. A trade-off study will be required to select the unloading system desired for a specific AES mission.

The unloading system weight may be decreased and the unloading operation made more reliable if modifications to the LEM/Truck were permissible. The modifications are discussed briefly in the report. The unloading event requires the successful and sequential operation of many independent explosive devices. The reliability of the system should be evaluated in order to establish confidence levels and concurrently introduce design improvements where necessary.

# SECTION 1.0

# INTRODUCTION

Both NASA and industry have developed conceptual designs of manned lunar mobile laboratories (MOLAB) as a means of extending Apollo mission surface stay-time up to fourteen (14) days. In accordance with the Apollo Extension Systems (AES) mission requirements, one or more MOLAB vehicles will be delivered to the lunar surface from lunar orbit by the LEM/Truck (LEM/T), a vehicle derived from the two-stage Apollo Lunar Excursion Module . After the lunar landing is accomplished the MOLAB must be remotely unloaded from the LEM/Truck to the lunar surface.

The purpose of the task reported herein is to provide several systems for remotely unloading the MOLAB payload of the AES mission. The unloading system concepts were tailored to two specific MOLAB configurations. The design effort was directed at evolving practicable mechanisms and structure for unloading the two MOLAB vehicles.

In addition to the unloading systems, structural tiedown systems which are compatible with the unloading system and which will adequately support the payload on the LEM/Truck during launch, cislunar flight and lunar landing, are presented. The command and control equipment required for the remote operation of the unloading systems was not within the scope of the study.

## SECTION 2.0

## OBJECTIVES

The primary objectives of the study presented herein were:

- To develop and define conceptual designs of structural and mechanical systems for unloading the two MOLAB configurations discussed in Sections 3.1 and 3.2 from the LEM/T.

- To determine the weight penalties associated with MOLAB unloading systems capable of unloading the vehicles from the LEM/T in a single fixed direction, in two directions ($180^{\circ}$ apart), within $\pm 45^{\circ}$ of the vehicles forward facing position and in any position from 0 - $360^{\circ}$ (variable azimuth).

- To develop tiedown systems (capable of transmitting the MOLAB inertia loads into the LEM/T primary structure) which are compatible with the unloading systems presented.

- To define the unloading sequence to be followed for each system.

- To recommend those concepts which appear to be the most practicable and desirable approach to the MOLAB unloading requirement.

- To perform sufficient analyses to insure, (1) adequate structural integrity of the unloading systems, (2) MOLAB vehicle and LEM/T unloading stability, (3) MOLAB clearance of the LEM/T throughout the unloading cycle, and (4) the selected track length permitted unloading, considering the LEM/T cargo deck height and the estimated lunar surface slope design requirements.

## SECTION 3.0

## AES PAYLOAD CONFIGURATIONS CONSIDERED IN THIS STUDY

For the purpose of this study two MOLAB configurations have been considered, i.e., a four wheel vehicle[2] and a six wheel semi-articulated vehicle[3]. No effort was expended in the course of this study to define a vehicle conceptual design. To reiterate, the purpose of this study was to develop only the unloading and tiedown systems which may be used with the two vehicles considered.

### 3.1 FOUR WHEEL VEHICLE CONFIGURATION

The four wheel vehicle concept[2] used in this study is shown in Figure 3-1. The wheels are folded for lunar shipment and are extended to the operational position during the unloading process.

The wheels are flexible and are compressed for lunar shipment. It was assumed in this study that the four wheels are supported by the MOLAB in the up and locked position and do not require wheel platforms for lunar shipment. This assumption permitted the exclusive use of chassis track systems for vehicle unloading.

A major design constraint for unloading MOLAB from the LEM/T deck is the clearance from the deck to the bottom of the vehicle chassis members. This clearance is shown in Figure 3-1, as eight inches. Other pertinent vehicle dimensions have been added in Figure 3-1 to define the vehicle configuration used in this study.

### 3.2 SIX WHEEL SEMIARTICULATED VEHICLE

This vehicle consists of a cabin mounted on four flexible wheels through an independent suspension system, and a semiarticulated trailer mounted on two flexible wheels. The cabin provides housing, life support and environmental control for two astronauts, space for scientific equipment, etc. The trailer carries the cryogenic tanks, fuel cells, batteries, etc. An outline of the vehicle in the stowed position on the LEM/T is shown in Figure 3-2. Figure 3-2 was constructed from information contained in Reference 3.

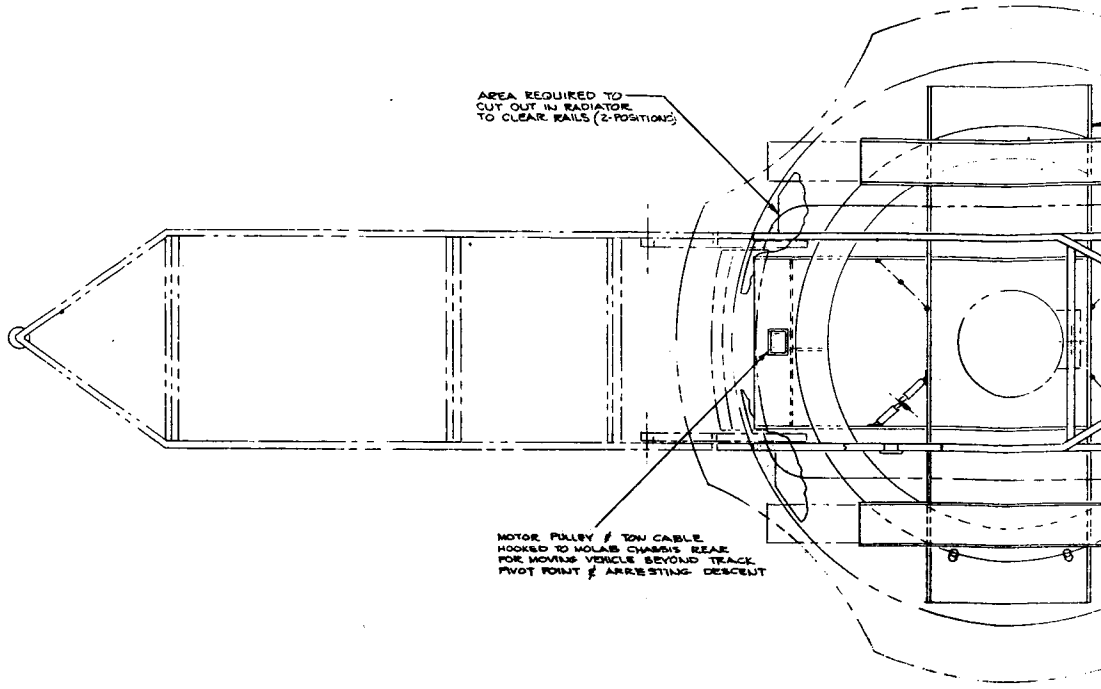


PLAN VIEW

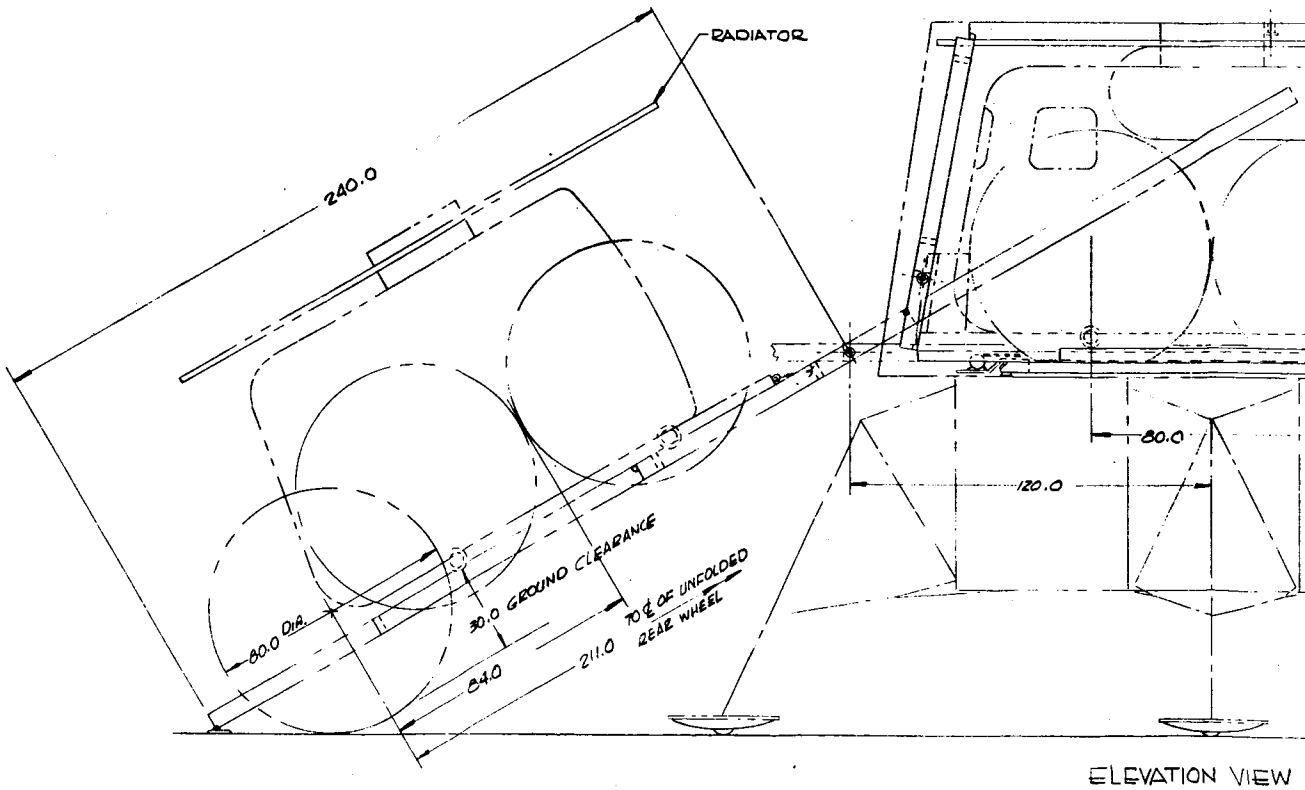


ELEVATION VIEW

14

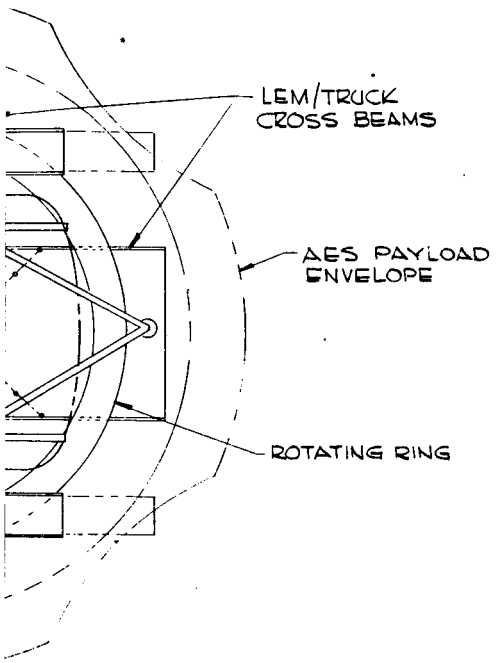


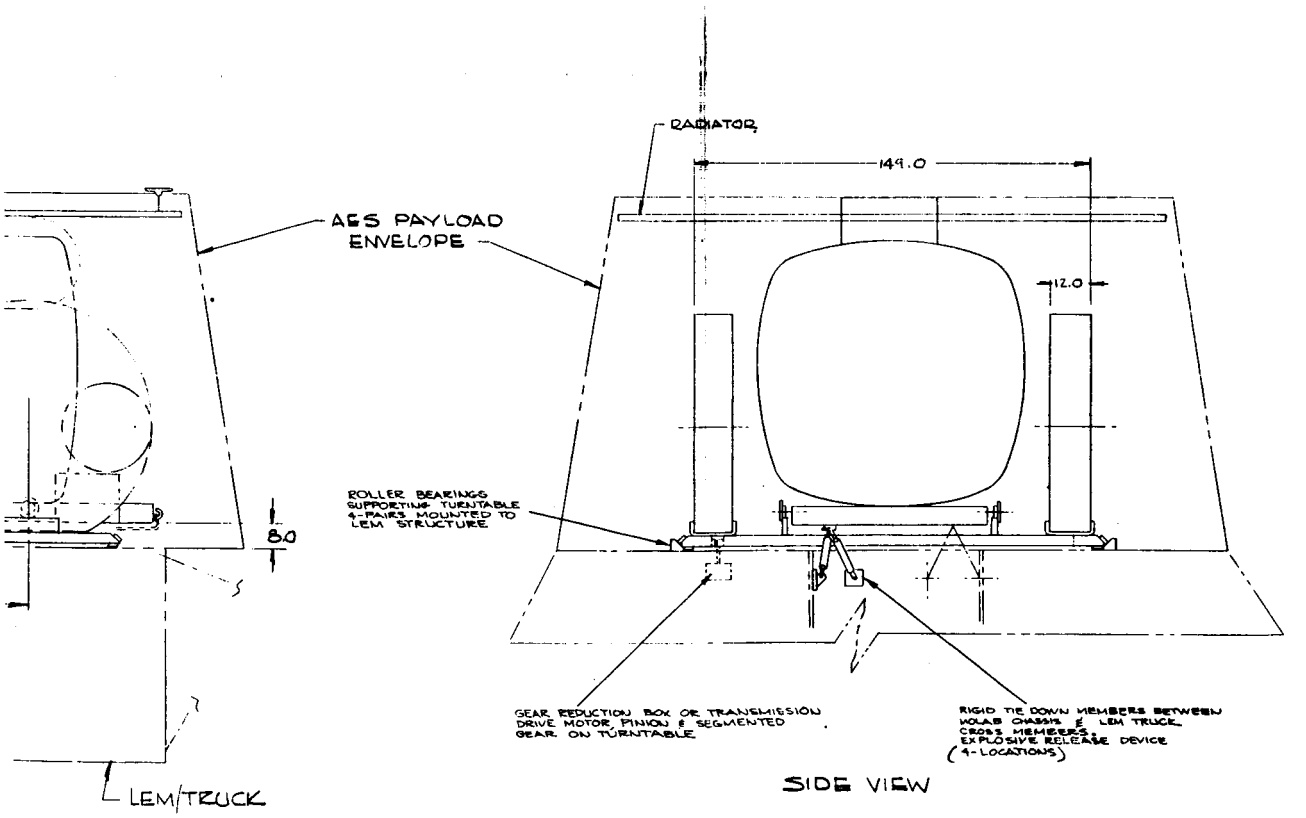


NOTE - THIS DRAWING ABSTRACTED FROM REFERENCE 2
('DWG BSX-470)

**FIGURE 3-1**

17NOV64 FOUR WHEEL
MOLAB VEHICLE
CONCEPT

N-39-1

1/20

2 #

SIX WHEEL SEMIARTICUI
(CONSTRUCTED FROM INFORMATIO

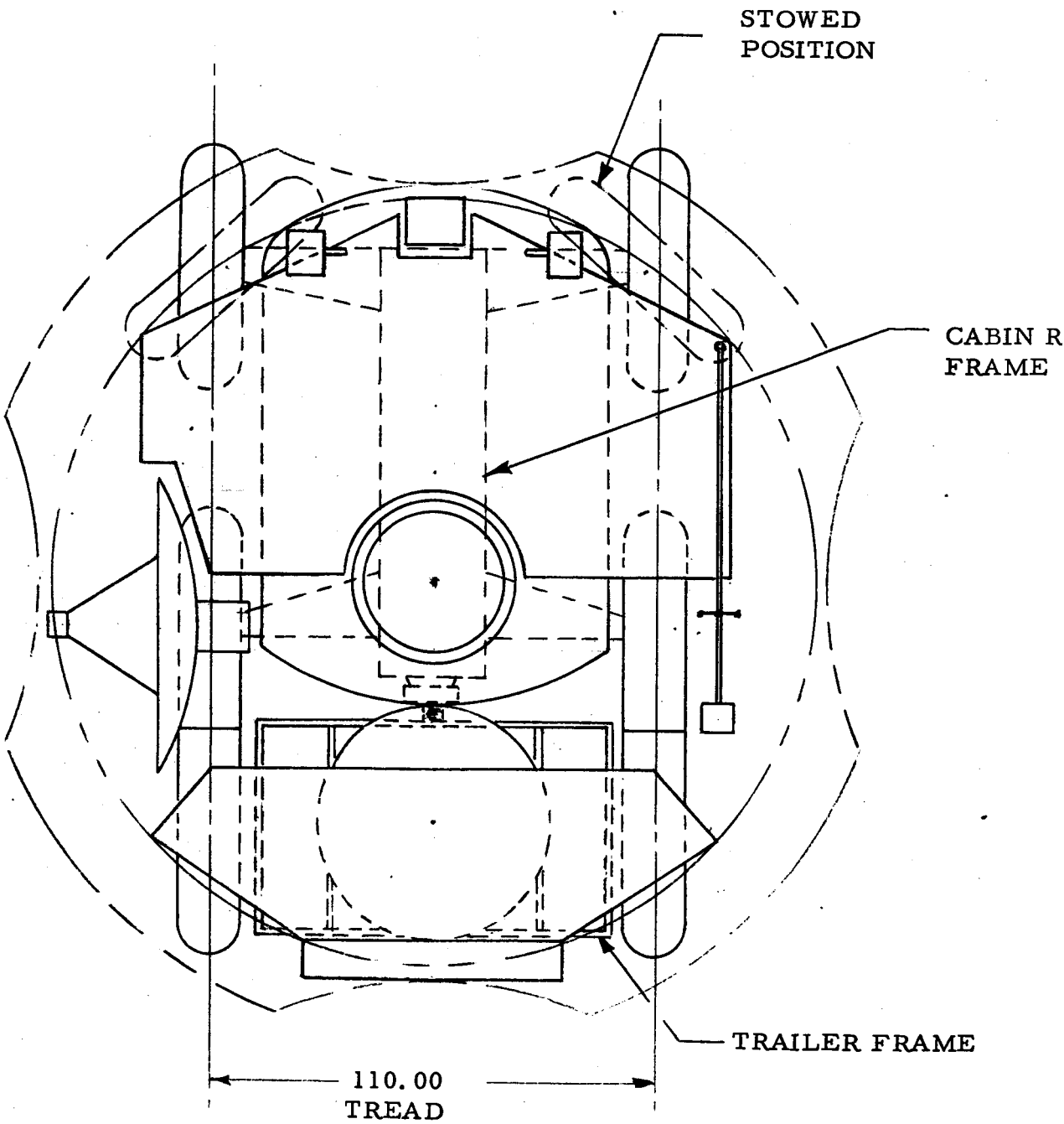


FIGURE 3-2

1#

LATED VEHICLE CONCEPT
N CONTAINED IN REFERENCE 3)

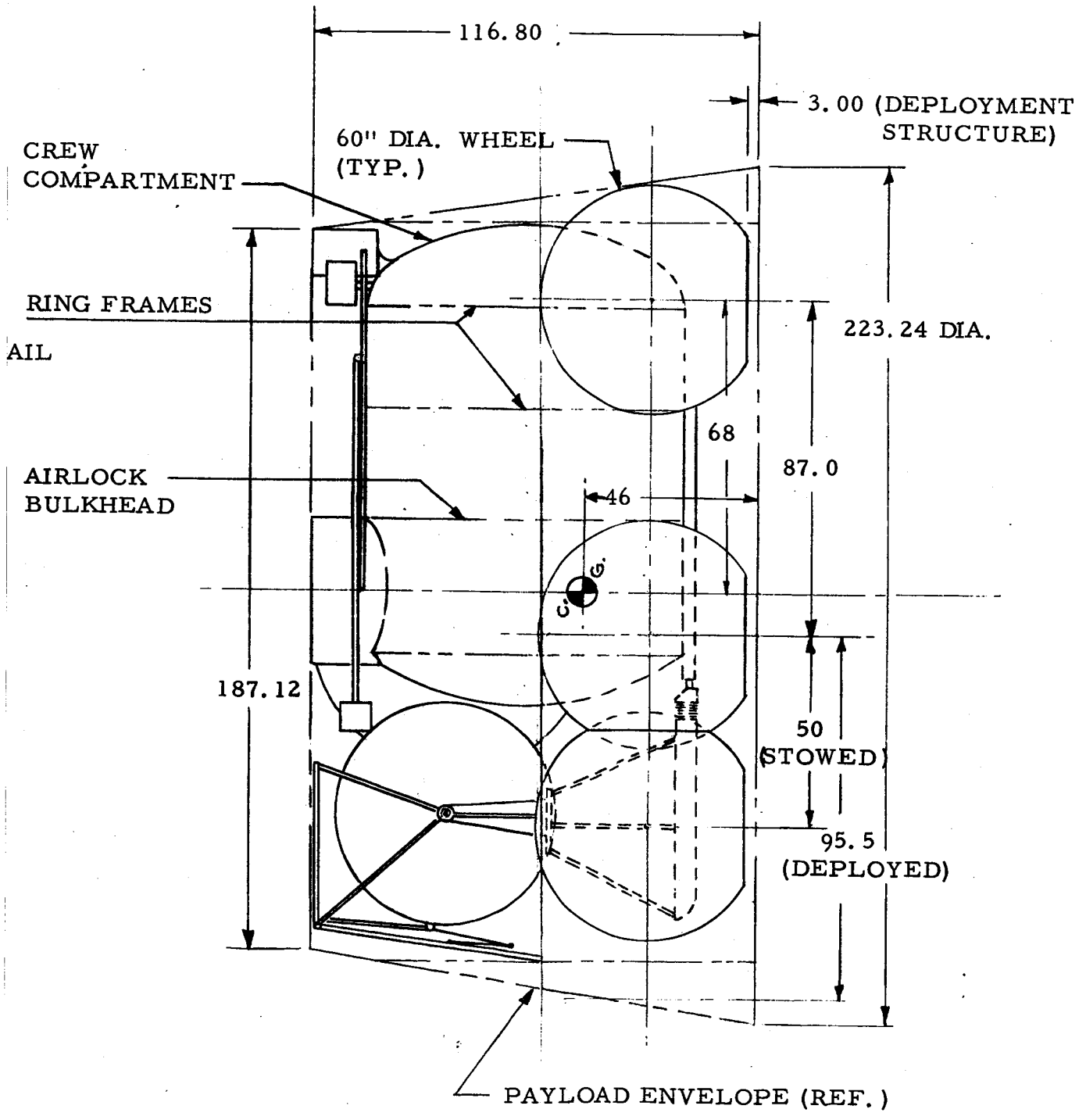


2#

The trailer is pulled forward in the stowed position. As a result the trailer wheels and the rear wheels of the crew compartment section are compressed as shown in Figure 3-2. In addition, the forward crew compartment section wheels are toed-in to fit within the payload envelope. The trailer is extended to its normal operating position and the forward wheels are straightened during the initial phase of the unloading operation.

Figure 3-2 also shows that the vehicle virtually occupies the entire payload envelope, allowing only three (3) inches under the wheels for unloading structure, no space above, and very limited space at the front and rear of the vehicle.

Several unloading and tiedown concepts have been developed for this vehicle configuration which fit within the payload envelope restrictions. These are presented in Section 9 of this report.



PAGE #6 BLANK

## SECTION 4.0

## RESTRAINTS AND ASSUMPTIONS

The following Restraints and Assumptions, applicable to the overall scope of the tiedown and unloading study, are presented in this section.

### RESTRAINTS

- The LEM/T vehicle will be used to deliver the AES payload to the lunar surface from lunar orbit.

- The payload will be remotely unloaded from the LEM/T deck shortly after the lunar landing is completed. However in the event of remote unloading mode failure, the payload dormant period on the lunar surface can be up to six months.

### ASSUMPTIONS

- The power required to unload the vehicle will be available either from the LEM/T or the MOLAB vehicle secondary power supply.

- An adequate communications system is available to complete the functions necessary for remote control unloading.

- Engineering technology will be sufficiently advanced to permit the use of bearings, hinges, cable-pulley drives and similar mechanical devices in the lunar near-vacuum environment.

- The landed LEM/T will have a fixed weight of 5,010 pounds, composed of 4,920 pounds inert weight plus 90 pounds of trapped propellants.

## SECTION 5.0

## DESIGN REQUIREMENTS

The design requirements for the unloading and tiedown system are categorized as

- General Requirements
- Environmental Requirements
- Structural Requirements
- Electronic Subsystem Requirements

The electronic subsystem has been presented in a previous report[4] and will not be further discussed in this report.

### 5.1 GENERAL REQUIREMENTS

5.1.1 The design of the unloading and tiedown system should strive for simplicity and for attaining the reliability value which will eventually be assigned to this subsystem as a result of overall MOLAB reliability studies.

5.1.2 Careful attention shall be paid to the materials selected for use in the unloading and tiedown equipment design. The usual requirements for material selection are rigidity, strength, inhibiting of corrosion, wear, etc. The lunar environment will, in addition, pose severe thermal gradients, extremely low temperatures, solar radiation and micrometeorite bombardment which must be considered before a final material choice can be made.

5.1.3 The plane of the LEM/T cargo deck may be inclined from the horizontal a maximum of $18^{\circ}$ after landing on the lunar surface. The $18^{\circ}$ angle[5] includes the integrated effects of a 24 inch high rock, 25 inch maximum lander leg deflection and maximum lunar slopes of $5^{\circ}$.

5.1.4 The MOLAB docking adapter may be considered capable of sustaining hoisting loads for vehicle unloading from the LEM/T to the lunar surface.

5.1.5 The MOLAB center of gravity during shipment is assumed to be within 2.5 inches of the AES payload vertical centerline and between LEM stations 232 to 246. The LEM/T cargo deck is assumed to be at LEM station 200.

5.1.6 Remote control automated unloading will be required with a backup capability for manual unloading should a failure occur in the remote command link or power supply (not in the MOLAB primary power supply).

5.1.7 Devices for effecting vehicle unloading by means of powered flight are excluded from consideration in this study.[6]

## 5.2 ENVIRONMENTAL REQUIREMENTS

5.2.1 All components used in the unloading operation shall be protected to withstand the translunar and lunar environments[7] including the six month dormant period. This requirement also applies to all unloading components installed on the LEM/T. Specifically, radiation, thermal and micrometeorite protection shall be provided for all unloading components.

5.2.2 The characteristics of the lunar surface[7], including $5^{\circ}$ lunar slopes, 24 inch high rocks and the lunar soil bearing strength shall be considered in the unloading operation.

## 5.3 STRUCTURAL REQUIREMENTS

5.3.1 All loadings, including dynamic effects, shall be considered in the design of the unloading and tiedown systems. The events of interest include; handling and transportation on Earth, erection and mating to the launch vehicle, launch, cislunar transit, midcourse docking loads, acquisition of lunar orbit, lunar descent and landing, and unloading operations.

5.3.2 Structural yielding, detrimental to component function shall not occur at 1.1 times limit load.[7]

5.3.3 The unloading structure shall not fail at 1.4 times limit load.[7]

5.3.4 A dynamic load factor of 1.3 shall be used for all structures associated with the unloading operation.

## SECTION 6.0

## DESIGN APPROACH AND SELECTION CRITERIA

Figure 6-1 illustrates the task methodology used in this study. The design approach consisted of establishing design requirements, system restraints, and assumptions. System analysis and synthesis resulted in preliminary concepts which were evaluated by the selection criteria and by integration analyses to establish acceptable concepts for the unloading equipment, packaging of unloading equipment and tie-down configurations. The selected concepts were further analyzed for strength, rigidity and finally weight data. An iteration loop is shown whereby the concepts were again compared with the selection criteria before finally selecting the concepts which most closely fulfilled the design criteria.

The preliminary concepts and design analyses included the effect of the unloading and tiedown system interfaces. The interfaces considered were; (1) LEM/T, (2) AES Payload Envelope, (3) the lunar surface and (4) the remote control communications equipment. Three command and control stations are shown; Earth, Apollo Command Module and the LEM on the lunar surface. The three stations exercise remote control of MOLAB, via the communication equipment interface, and direct the unloading operation from the LEM/T to the lunar surface.

Of the five selection criteria shown, only minimum weight was quantitatively established by this study. A qualitative analysis was used to evaluate minimum development and testing costs, system simplicity of operation, system versatility and system reliability. This qualitative analysis of the items aided in accounting for the features an acceptable concept should have.

A schematic breakdown of the unloading and tiedown design task is shown in Figure 6-2. Two basic MOLAB vehicles are shown, namely, the four wheel and the six wheel semiarticulated configurations. Unloading and tiedown systems were devised for each vehicle. The four types of unloading systems considered included: single direction unloading, two direction unloading ($180^{\circ}$ apart), partial azimuth unloading capability from $0^{\circ}$ to $\pm 45^{\circ}$ and finally $360^{\circ}$ azimuth unloading. Weights were established for each system to aid in evaluating the weight penalty involved for the varying degrees of azimuth capabilities. Finally, unloading systems were chosen and recommended for each vehicle and for each level of azimuth capability.

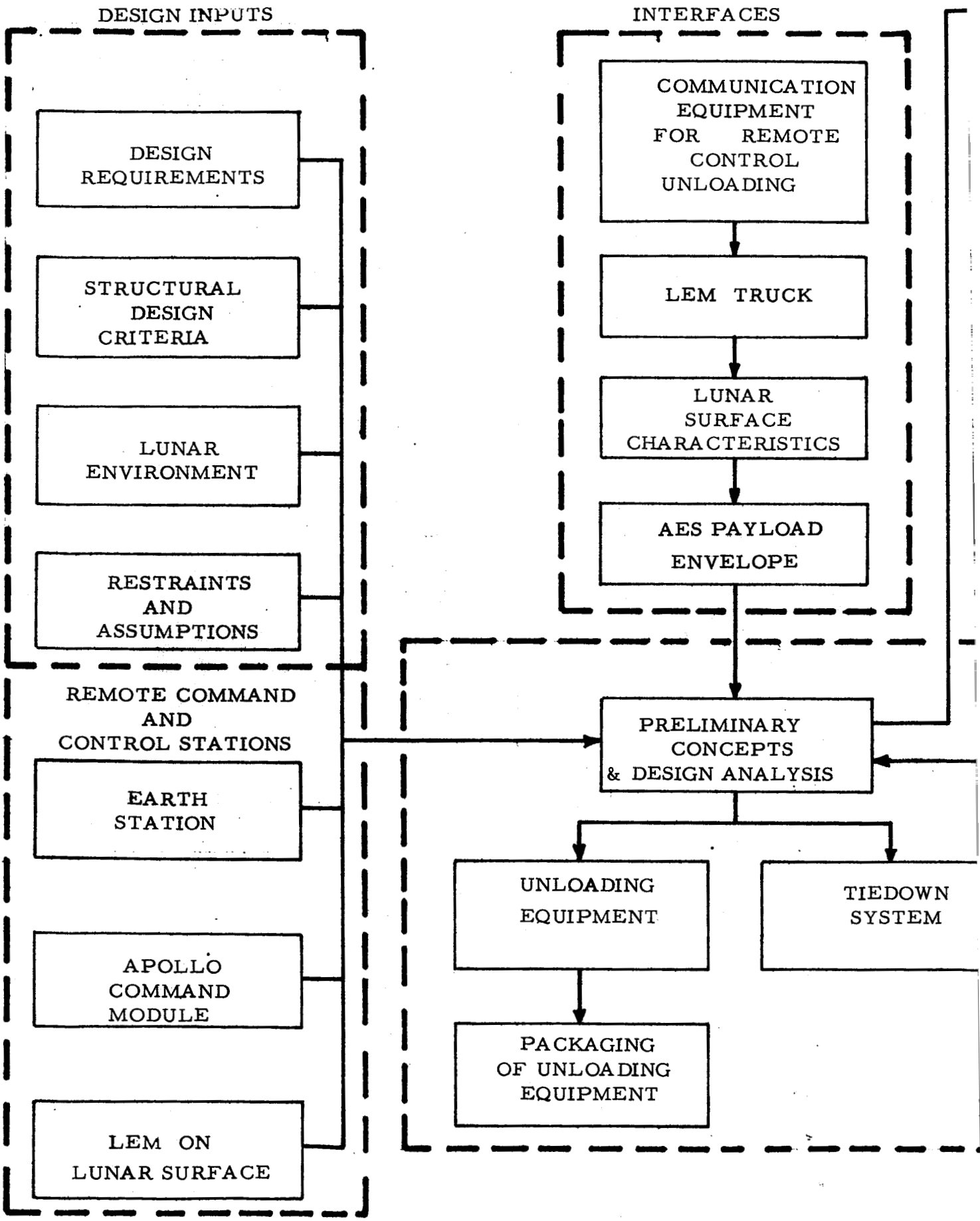


FIGURE 6-1 TASK METH

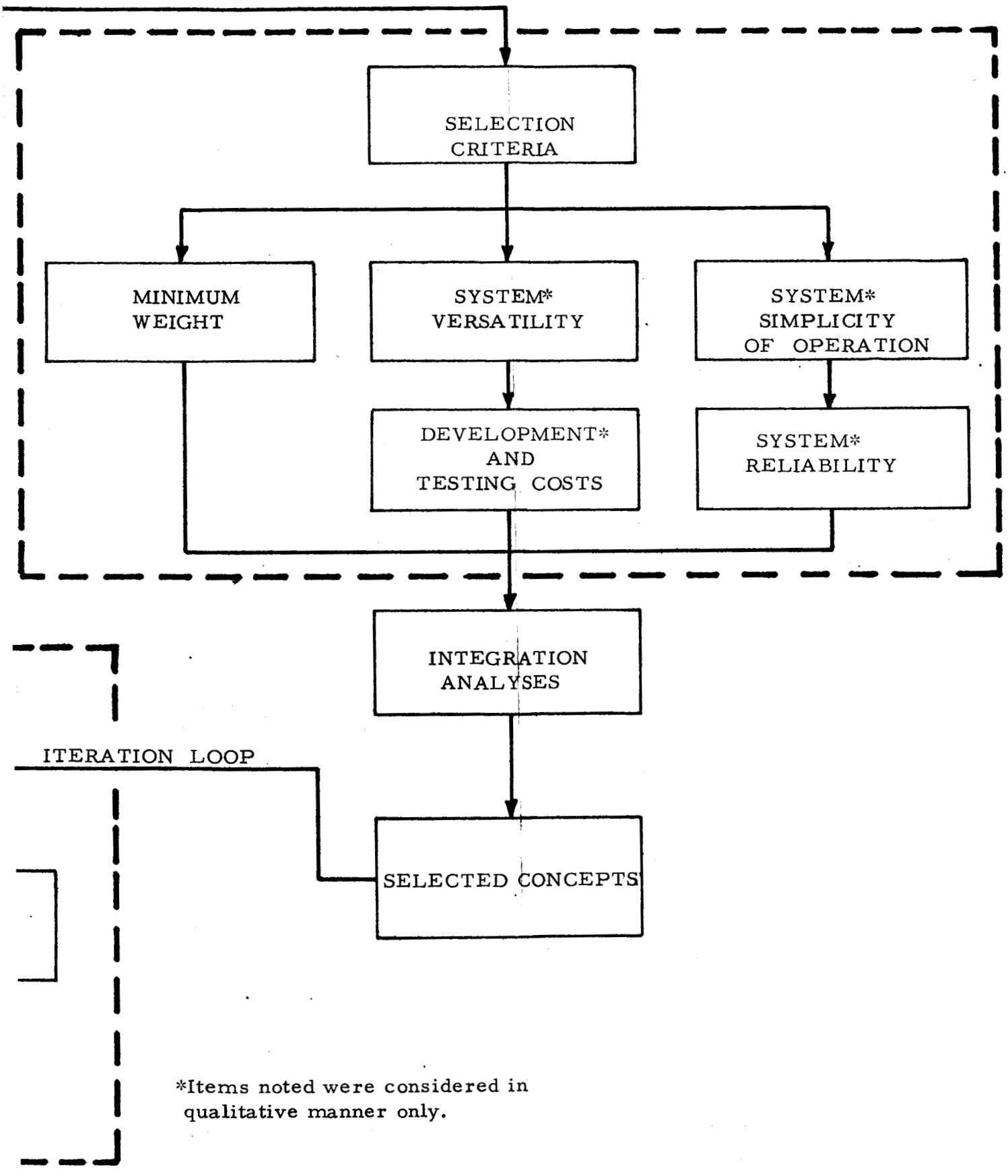


*Items noted were considered in qualitative manner only.

2#

FLOW CHART FOR THE UNLOADING AND TIEDOWN SYSTEMS CONSIDERED FOR THE 4-WHEEL AND 6-WHEEL SEMIARTICULATED VEHICLES

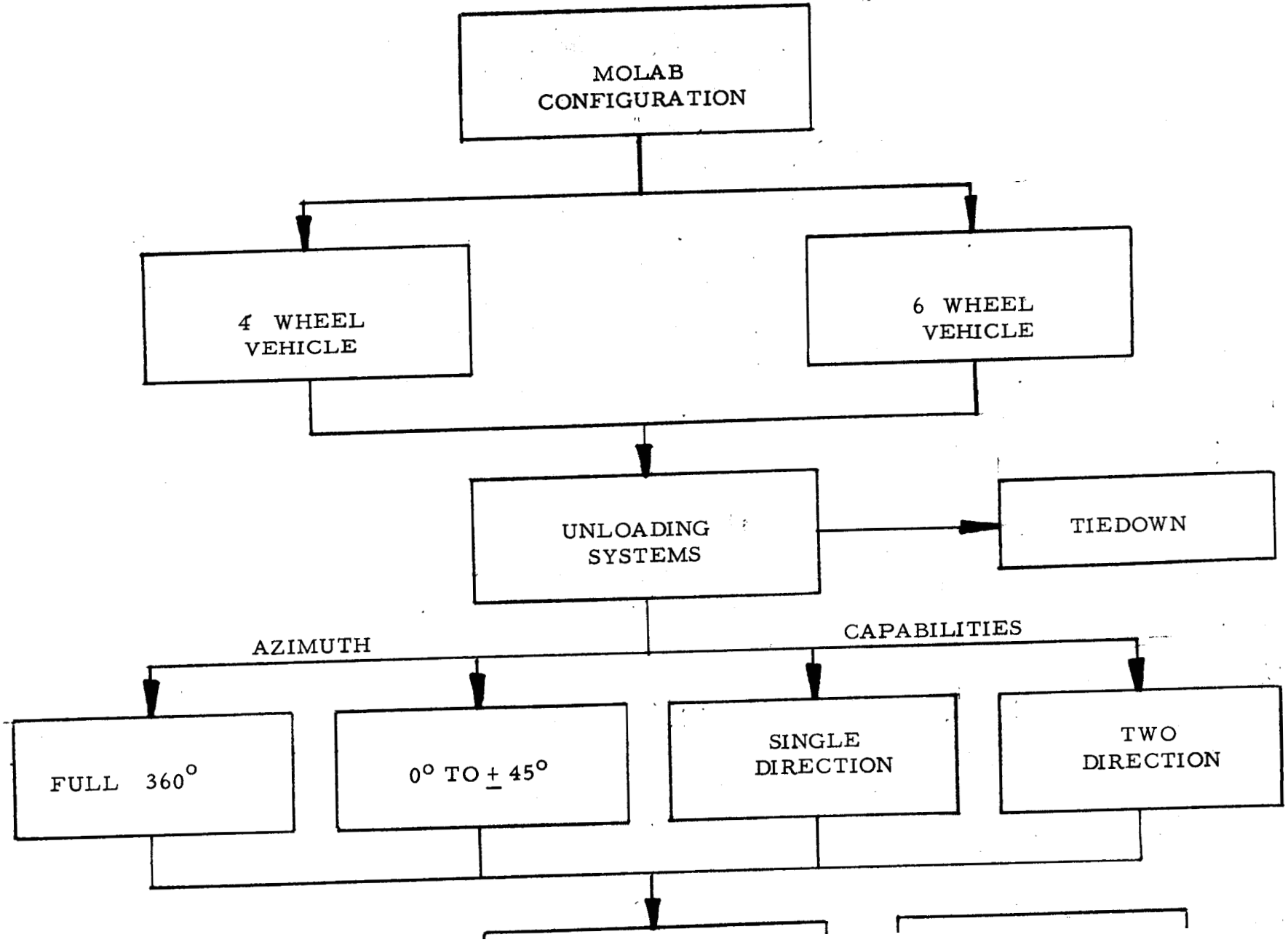


A'

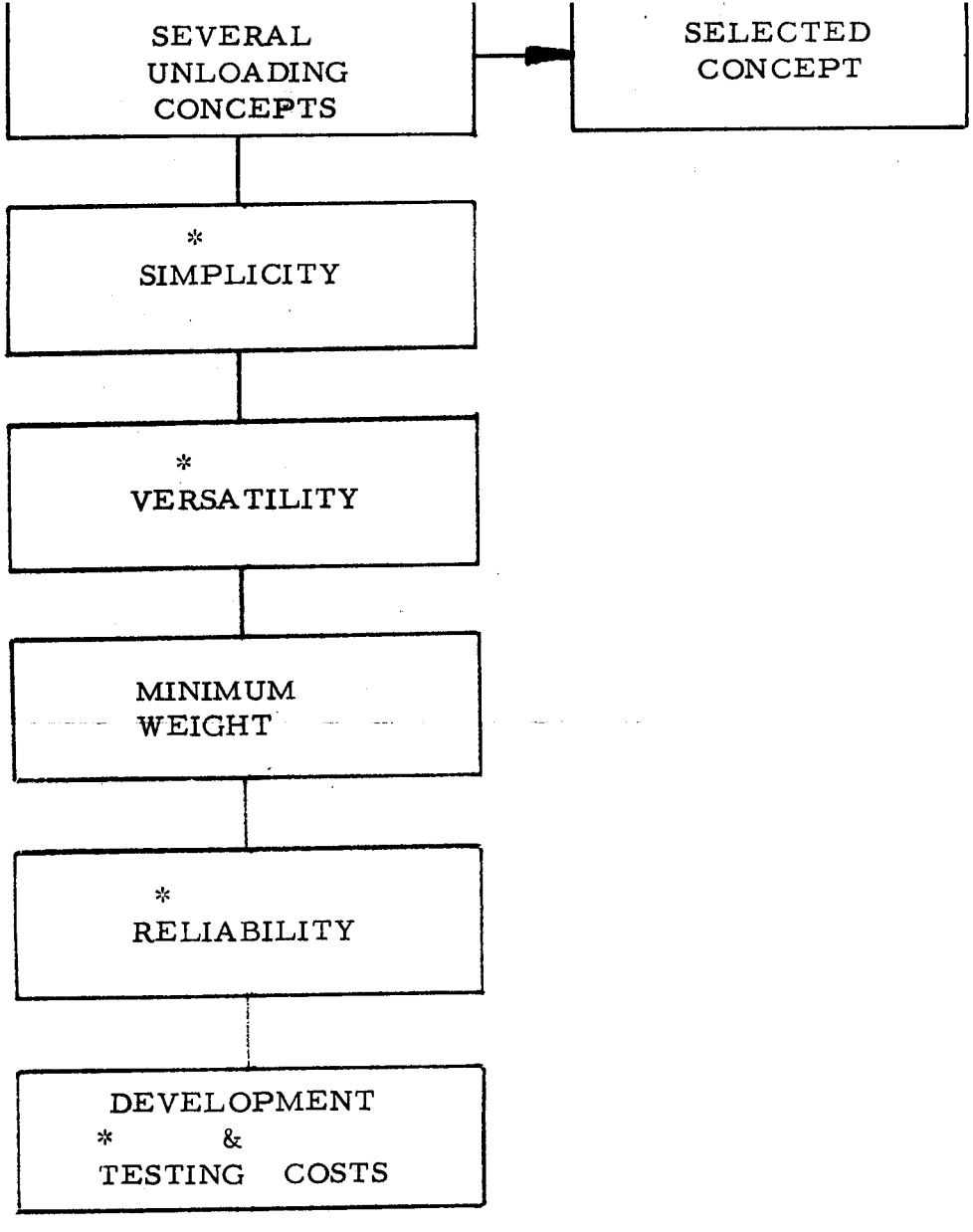


*Items noted considered in qualitative manner only.

FIGURE 6-2

## SECTION 7.0

## INTERFACE CONSIDERATIONS

The four interfaces requiring study for the unloading of the MOLAB are:

- AES Payload Envelope/Unloading Equipment Interface
- LEM/T/MOLAB Interface
- Lunar Surface/Unloading Track Interface
- Telecommunications and Control Interface

The interfaces are further discussed below.

Interface relationships have been briefly discussed in Section 6.0 and illustrated in Figure 6-1.

### 7.1 AES PAYLOAD ENVELOPE/UNLOADING EQUIPMENT INTERFACE

The AES Payload Evenlope is shown in Figure 7-1. The unloading equipment must fit inside of the specified AES payload envelope. The four scallops of 100.0 inch radius are a payload envelope clearance constraint. The scallops provide the blast paths for the attitude control engines located on the LEM/T. The blast path clearance requirement is assumed to be constant over the height of the payload envelope.

### 7.2 LEM/T/MOLAB INTERFACE

The LEM/T configuration used in this study is shown in Figure 7-2. The unloading equipment was considered as part of the MOLAB payload rather than a part of the LEM/T. The MOLAB and the unloading equipment may be tied and secured to the LEM/T anywhere along the latter's cross beams. Straddling of the cross beams with structural members is also permitted provided no interference exists with LEM/T components, e.g., propellant tanks. The specific LEM/T features requiring consideration in this study include:

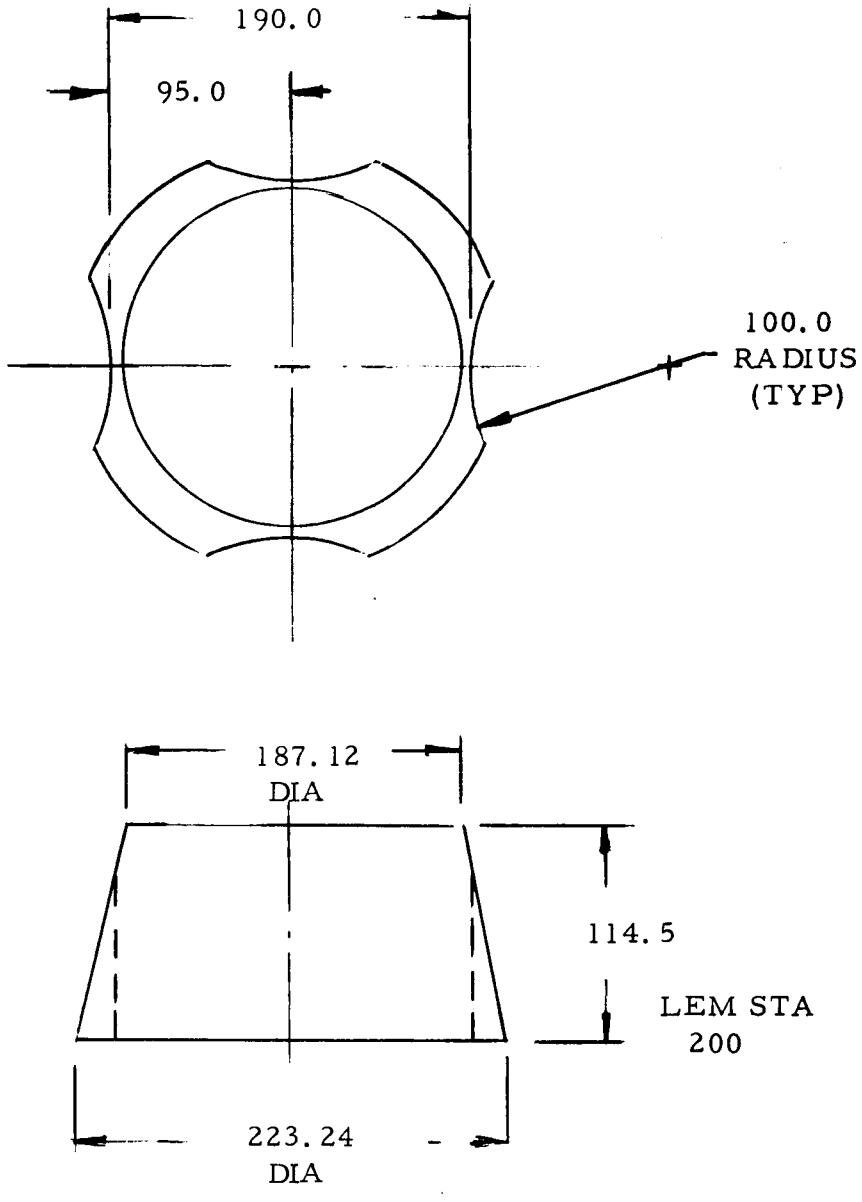


AES PAYLOAD ENVELOPE
FIGURE 7-1

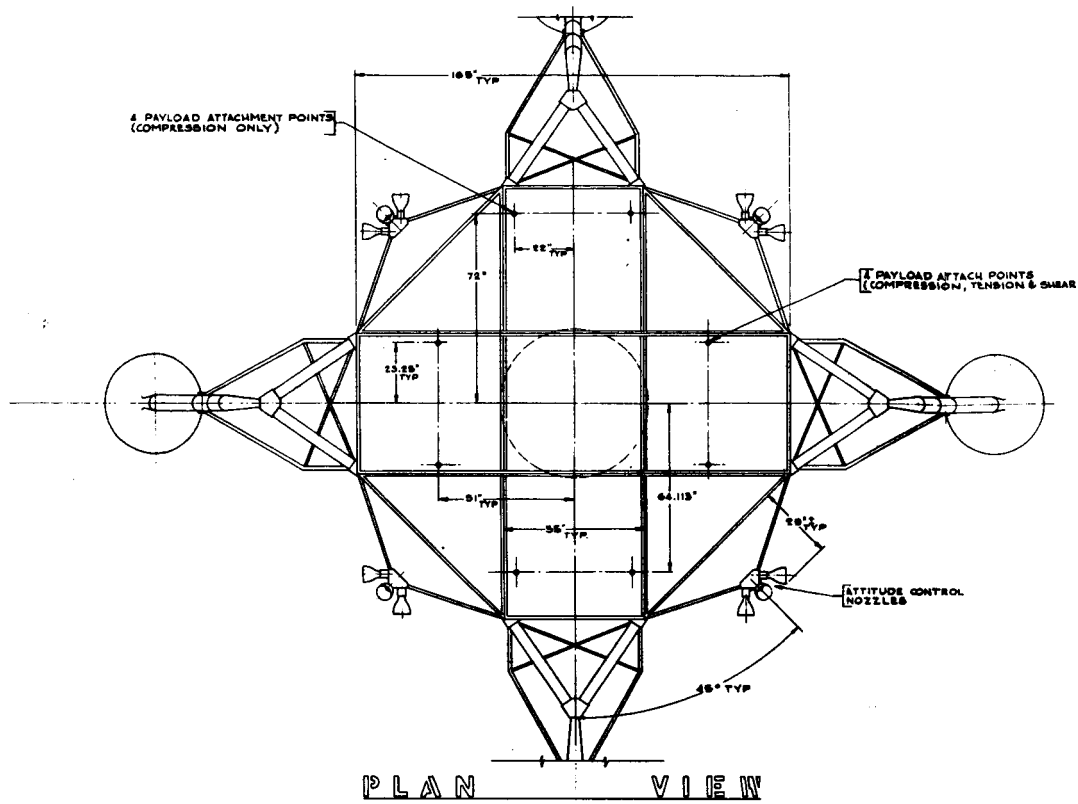
4 PAYLOAD ATTACHMENT POINTS (COMPRESSION ONLY)
4 PAYLOAD ATTACH POINTS (COMPRESSION, TENSION & SHEAR
ATTITUDE CONTROL NOZZLES
72"
22" TYP
23.25" TYP
91" TYP
64.113"
56" TYP
28.5° TYP
45° TYP
PLAN VIEW

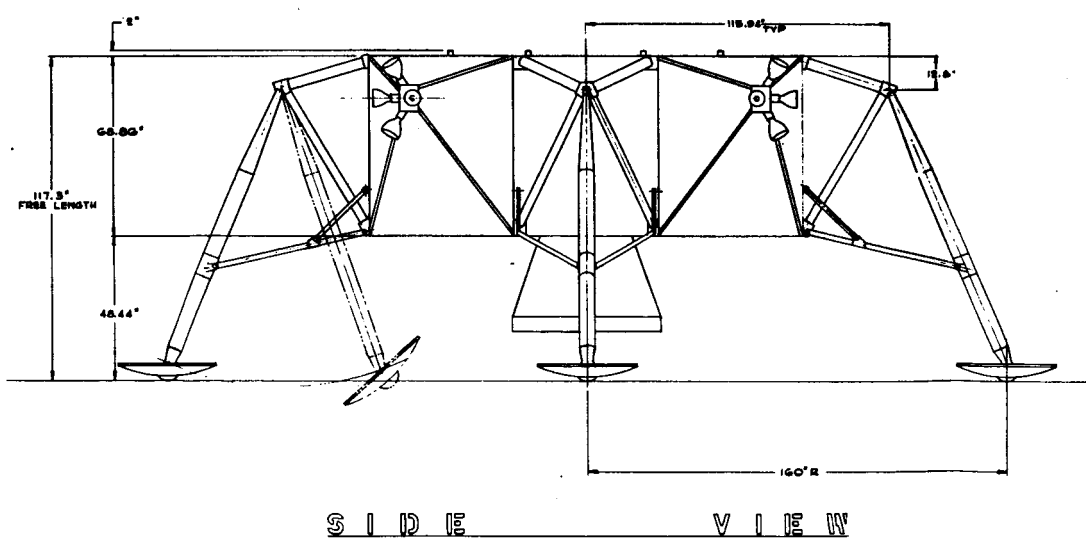
2"
115.94" TYP
15.5"
68.86"
117.3" FREE LENGTH
48.44"
160" R
SIDE VIEW

1 #

| PART NO. | NO. | REVISIONS | | | |
|---|---|---|---|---|---|
| | ZONE | SYM | DESCRIPTION | DATE | APPROVAL |

R-P&VE-AB

| | | | | | |
|---|---|---|---|---|---|
| NO REQD PER ASSY | | | | | |
| ASSY SHOWN ON | | | | | |
| | | | | | |
| SEE ENGINEERING RECORDS | | | | | |
| | | | | | |
| NEXT ASSY | USED ON | | | | |
| APPLICATION | | | | | |

LIST OF MATERIAL

UNLESS OTHERWISE SPECIFIED

ORIGINAL DATE OF DRAWING 13 MAR 64

LEM - TRUCK

LAYOUT

GEORGE C. MARSHALL SPACE FLIGHT CENTER
NATIONAL AERONAUTICS AND SPACE ADMINISTRATION
HUNTSVILLE, ALABAMA

SKETCH

J AB-11007

SCALE 1 = 20

SHEET 1 OF 1

FIGURE 7-2



2#

- The attitude of the cargo deck after landing on the lunar surface.
- Clearances for MOLAB, during the unloading operation, of the LEM/T legs and attitude control engines.
- Stability during the unloading operation.
- Leg deflections from 0 to 25 inches.
- An umbilical cable which will be required if the inertial measuring unit (IMU) is located in the docking adapter area of MOLAB rather than on the LEM/T. This cable must then be disconnected before unloading.

## 7.3 LUNAR SURFACE/UNLOADING TRACK INTERFACE

The characteristics of the lunar soil were uncertain at the time of this study. The maximum lunar slope in the landing area was assumed to be $5^{\circ}$ and the maximum protuberance height was assumed to be 24 inches.[5] It was assumed that the lunar soil possesses sufficient bearing strength to support the unloading tracks during the unloading operation.

## 7.4 TELECOMMUNICATION AND CONTROL INTERFACES

The communication requirements for remote control of the unloading operation have been thoroughly explored and reported in a previous study[4] and will not be further discussed in this report. The remote control stations as shown in Figure 6-1 include Earth, Apollo Command Module and the LEM on the lunar surface.

## SECTION 8.0

## PARAMETRIC STUDIES

In conducting a study of the type being presented here, an investigation of the various parameters influencing the design is necessary. It is further considered necessary to determine the effect varying one or more of these parameters may have on a particular system, so that the various "trade-offs" may be compared.

This section presents data indicating the result of varying the range of values for the major parameters.

### 8.1 PAYLOAD STABILITY

Payload stability is defined as the maximum angle through which a body may be rotated with respect to its instant center and remain stable.

The equation given below relates the maximum tipping angle $\theta$ and the coordinates of the body center of gravity (or resultant of forces acting on the body) with respect to the instant center.

$$\theta = \tan^{-1} \frac{X}{Y}$$

where X = Horizontal distance from instant center to center of gravity

Y = Vertical distance from instant center to center of gravity

The value of $\theta$ thus obtained, represents a case of static marginal stability. An unloading system design should therefore limit the maximum tipping angle to something less than the value of $\theta$ obtained.

### 8.2 LEM/T - MOLAB STABILITY

The LEM/T-MOLAB stability is of particular interest in the case of boom unloading, or when unloading on lunar slopes. Boom type unloading is considered to be that in which a boom, or other mechanism which is attached to the LEM/T, raises the MOLAB from the LEM/T, swings the MOLAB vehicle away from the LEM/T and then lowers it to the lunar surface. In this operation the combined cg of the LEM/T and

MOLAB will shift toward the axis of rotation. Considering the LEM/T to be resting on a horizontal surface, the axis of rotation is a line through the point of contact of the LEM/T leg and lunar surface, in a direction normal to the plane formed by vertical lines through the cg's of the LEM/T and MOLAB (see Figure 8-1a). Note that the position and orientation of the axis of rotation may vary throughout the boom effected unloading cycle as a result of MOLAB cg movement.

In the case of track unloading the shift of resultant forces is of prime interest rather than the overall cg shift. The axis of rotation is determined in the same manner, except that applied forces are used in lieu of the MOLAB weight (see Figure 8-1b).

To determine the coordinates (with respect to the axis of rotation) of the shifted cg or resultant applied force the following equations may be used;

$$\overline{X} = \frac{(X_T F_T + X_V F_V)}{(F_T + F_V)} \; ; \qquad \overline{Y} = \frac{(Y_T F_T + Y_V F_V)}{(F_T + F_V)}$$

$F_T$ = Weight of LEM/T

$F_V$ = Resultant Force or Weight of MOLAB on LEM/T track or boom support point

$X_T$, $X_V$, $Y_T$, $Y_V$ - Coordinates shown in Figure 8-1

Using the coordinates X and Y calculated from the above equations and those given in Section 8.1, the maximum lunar slope, on which a vehicle may be safely unloaded can be determined.

## 8.3 TRACK LENGTH

The length of track used to unload a vehicle from the LEM/T will be influenced, in part, by the parameters discussed in Sections 8.1 and 8.2. In addition, the geometric parameters shown in Figure 8-2 will also influence track length.

Due to the many variables involved here a nomograph was not constructed. However, the track length, expressed in equation form, and the nomenclature are given in Figure 8-2.

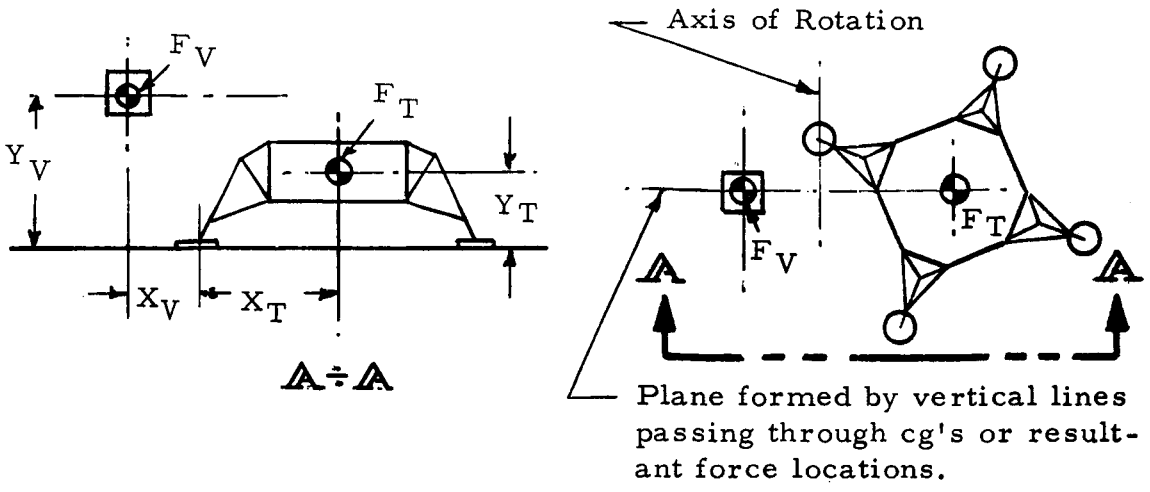


FIGURE 8-1a

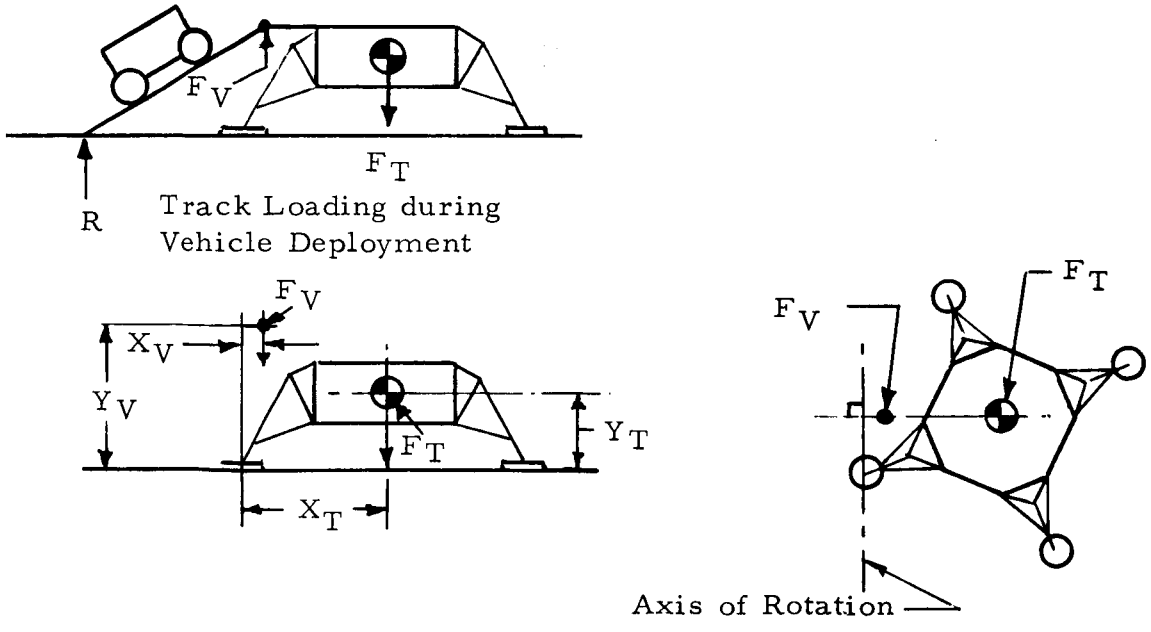


FIGURE 8-1b

LEM/T STABILITY

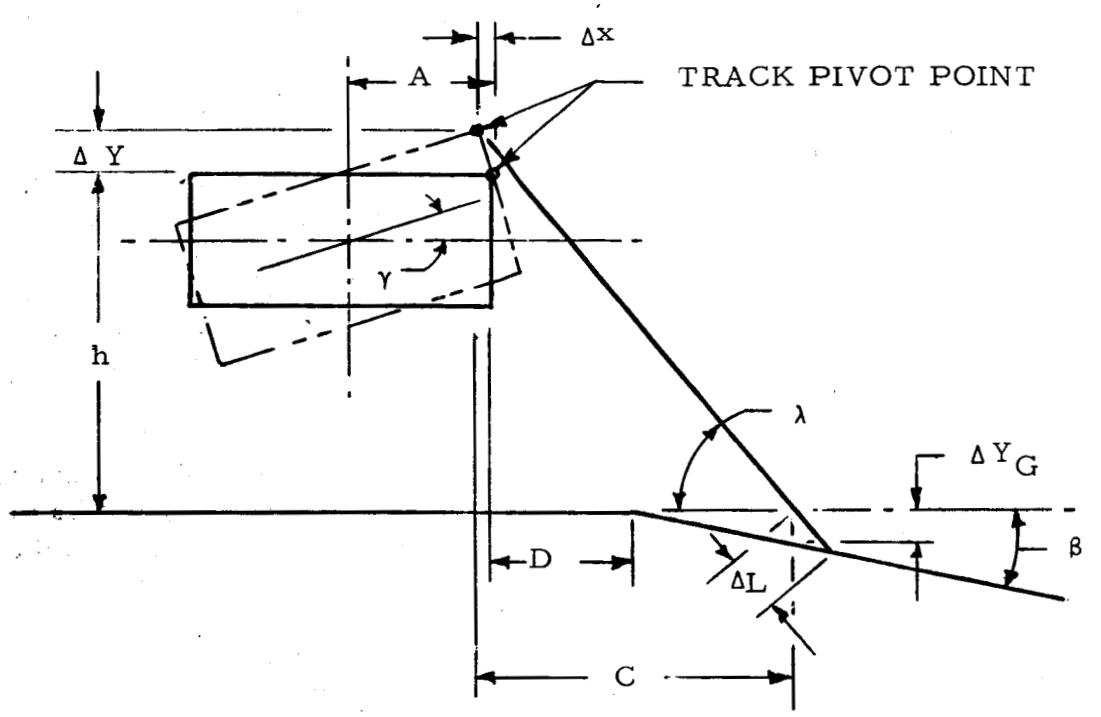


H = h/cos γ
h = Vertical distance from ground level to track pivot when γ = O
γ = Inclination of LEM/Truck bed from horizontal
A = Perpendicular distance from LEM/Truck vertical centerline to track pivot point
ΔX, ΔY = Change in coordinates of pivot point
λ = Track inclination from horizontal
D = Distance from pivot point to break in ground slope when γ = O
β = Ground inclination from horizontal

$$\Delta Y = A \sin \gamma, \quad \Delta X = A(1 - \cos \gamma), \quad C = \frac{H + \Delta Y}{\tan \lambda} = \frac{H + A \sin \gamma}{\tan \lambda}$$

$$\Delta Y_G = \frac{C - (D + \Delta X)}{\cot \beta} = \left[\frac{H + A \sin \gamma}{\tan \lambda} - A(1 - \cos \gamma) - D\right] \tan \beta$$

$$\Delta L = \Delta Y_G \frac{\sin(90 + \beta)}{\sin(\lambda - \beta)} = \left[\frac{H + A \sin \gamma}{\tan \lambda} - A(1 - \cos \gamma) - D\right] \frac{\sin \beta \tan \beta}{\sin(\lambda - \beta)}$$

$$L = \left(\frac{H + A \sin \gamma}{\sin \lambda}\right) + \left[\frac{H + A \sin \gamma}{\tan \lambda} - A(1 - \cos \gamma) - D\right]\left(\frac{\sin \beta \tan \beta}{\sin(\lambda - \beta)}\right)$$

UNLOADING TRACK LENGTHS
FIGURE 8-2

## 8.4 RELATIVE BENDING AND TORSIONAL EFFICIENCIES OF BEAM CROSS SECTIONS

The major portion of the weight attributed to the unloading and tiedown systems is a result of structural considerations. It is therefore, desirable to utilize structural members having cross sections which display a high strength to weight ratio for the major loading conditions such as bending, torsion and axial tension or compression. There are, of course, other considerations entering into the selection of member cross sections, i.e., compatibility with basic geometry constraints, primary loading condition (bending or torsion) and the auxiliary functions for which a structural member may be used.

However, to obtain a qualitative estimate of the structural efficiencies of member cross sections, which may or may not be used in subsequent sections of this, or other reports, Table 8-1 is included. This Table is based on information contained in Reference 8.

Using a channel as a base line, the relative bending and torsional resistance of four equal area cross sectional shapes are compared. Since the shapes are compared on an equal area basis, it follows that they are also compared on an equal weight basis.

TABLE 8-1

TYPICAL CROSS SECTIONAL PROPERTIES SHOWING RELATIVE BENDING AND TORSIONAL RESISTANCES

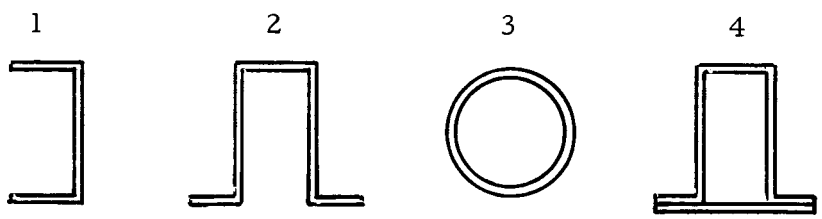


| ELEMENT | 1 | 2 | 3 | 4 |
|---|---|---|---|---|
| BENDING RESISTANCE | 1.0 | .838 | .872 | .635 |
| TORSIONAL RESISTANCE | 1.0 | .63 | 45.33 | 17.0 |

NOTE: This data was abstracted from Reference 8.

# SECTION 9.0

# CONCEPTUAL DESIGN

The unloading and tiedown concepts developed in this study will be presented in this section. As outlined in Figure 6-2 unloading concepts have been developed for the four wheel and the six wheel semiarticulated MOLAB vehicles with varying degrees of azimuth capabilities. The salient features of each concept will also be discussed. The unloading sequence is briefly outlined for each concept considered. The weights for the unloading and tiedown equipment are presented in Section 10.0 along with pertinent design analyses.

## 9.1 UNLOADING SYSTEM IDENTIFICATION NUMBERS

A numbering system is used to identify the unloading and tiedown system concepts established in this study. The first digit is either "4" or "6" to distinguish the 4 wheel vehicle from the 6 wheel semi-articulated vehicle, followed by a letter which establishes the azimuth capability of the unloading system.

A - Single Fixed Direction Unloading Systems

B - Two-Direction ($180^\circ$ Apart) Unloading Systems

C - $0^\circ$ to $\pm 45^\circ$ Azimuth Unloading Systems

D - $360^\circ$ Azimuth Unloading Systems

The third and last digits are assigned to differentiate between systems having similar capabilities. For example 4D-1 and 4D-2 would refer to unloading systems, developed for the four wheel vehicle, having full or $360^\circ$ azimuth capability. The preferred system is indicated by -1 and -2 is an optional system having similar capabilities.

## 9.2 FOUR WHEEL VEHICLE UNLOADING SYSTEMS

Unloading and tiedown concepts have been developed for this vehicle in previous studies[4] as shown in Figure 3-1. Salient features of the unloading system include chassis tracks for vehicle deployment, full $360^\circ$ azimuth capability, single lunar surface contact point track for minimizing twisting due to uneven lunar surface contact, tilting

tracks requiring minimum vehicle clearances, cable unloading with supplementary power and a four point truss tiedown for the vehicle.

The four types of unloading systems developed in this study for the 4 wheel vehicle include single or fixed direction systems, two direction ($180^{\circ}$ apart) systems, $0^{\circ}$ to $\pm 45^{\circ}$ azimuth systems and full $360^{\circ}$ systems. The tiedown strut system for the vehicle is unchanged for all the unloading concepts presented in this report. Eight struts are used in four pairs to secure the MOLAB to the LEM/T cross beams. The struts are bolted to the vehicle chassis fitting at four common points. The chassis strut connection utilizes explosive bolts to permit vehicle unloading.

Chassis tracks are used exclusively for all of the unloading concepts presented for the 4 wheel vehicle. Turntables are used for azimuth positioning utilizing either intermittent roller support or full integral turntable bearings.

### 9.2.1 UNLOADING SEQUENCE

The unloading sequence applicable to all four wheel vehicle unloading concepts will be briefly outlined. The sequences peculiar to a particular concept will be noted in the section of the report describing the concept. After landing on the moon the MOLAB will be immediately unloaded. This operation will be remotely controlled by the Earth station. The sequence of the unloading operation using the $360^{\circ}$ azimuth positioning system shown in Figure 9-3 is as follows:

- MOLAB antennas are erected to allow receipt of earth signals for direction of unloading operation.

- The eight struts securing MOLAB to the LEM/T are freed by blowing explosive bolts at the four vehicle chassis fittings. The struts will then swing freely to the LEM/T platform.

- MOLAB will then drop 1/4 inch; engaging the four chassis mounted rollers with the LEM/T mounted chassis tracks. MOLAB is now free to rotate with the turntable.

- A cable-pulley drive system is used to unfold and extend the chassis tracks. The tracks are kept in a horizontal position to provide a known distance reference to aid in azimuth positioning of the vehicle for the desired unloading direction.

- The turntable wheel motor drive is engaged and with the aid of stereo TV cameras the unloading direction is selected.

- The chassis tracks are freed from the LEM/T bed and allowed to pivot by the deployment of four explosive bolts.

- The flexible cable for the wheel motor drive and umbilical cable between the docking adapter and the LEM/T are explosively disconnected.

- The cable-pulley system is again actuated and pulls the MOLAB off the LEM/T. This action will incline the chassis tracks when the MOLAB cg is past the track pivot point. Further inclination of the tracks is controlled by a cable-tension reel system.

- For continued MOLAB descent the cable pulley system will act as a brake to permit controlled unloading.

- After track inclination the front wheels of the MOLAB are unlocked and the wheels are rotated to their operational position and locked.

- The descent of MOLAB continues until the front wheels touch the lunar surface.

- After the front wheels contact the lunar surface the rear wheels of MOLAB are unfolded in the same manner as indicated for the front wheels.

- The unloading cable is explosively disconnected after the rear wheels contact the lunar surface. MOLAB is free now to be driven a safe distance from the LEM/T and prepared for its six month dormant period.

### 9.2.2 SINGLE DIRECTION UNLOADING SYSTEMS

The single direction unloading systems are shown in Figures 9-1 and 9.2. The overhead track system 4A-1, shown in Figure 9-1, is recommended for single direction unloading. The folding track system, 4A-2, shown in Figure 9-2 has several advantages, however, the tracks do not fit into the AES payload envelope without minor modifications to the four wheel vehicle. The folding tracks can be pushed into the extended

position by the vehicle in the event the tracks do not readily deploy. The overhead track system must clear the docking adapter structure before deployment and cannot be as readily pushed into the extended position.

In order to clear all of the LEM/T structure during unloading, a pivot point for the chassis tracks is shown located 120 inches from the LEM/T centerline. A track length of 240 inches from the pivot permits MOLAB unloading without exceeding a $45^{\circ}$ track inclination angle (pitch stability angle).

Both the folding and overhead tracks are extended by a cable-pulley system. The kinematics of track extension are shown in Figures 9-1 and 9-2. The winch for the cable is mounted to the rear of the MOLAB and the same winch is used to extend the tracks, tow MOLAB off the LEM/T and brake the vehicle descent down the tracks. The use of the vehicle mounted winch will allow the winch to be used for lunar operations during the mission operational phase.

The pivot point for the tracks is secured to the LEM/T cross beams through the use of a pivot beam. During shipment the pivot beam is folded to fit within the AES payload envelope as shown in Figure 9-1. The folded section of the pivot beam is extended with the tracks during the unloading operation. The fixed end of the pivot beam is bolted to the T-section flange of the LEM/T cross beams. For track hinge joints which will not support flexure loads during unloading a spring lock bar is shown for carrying the track tension during flexure loading.

For lunar shipment the bottom horizontal sections of the chassis tracks are bolted to LEM/T cross beams. To allow track inclinations during unloading the bolts are explosively deployed. The tracks are then free to pivot about the pivot point when the MOLAB is towed off the lander by the winch.

With the use of the single point contact track design a honeycomb pad may be used to control track impact accelerations. A more desirable mechanism to control the track tilting velocities is the cable-tension reel shown. This device may be designed to control track tilting velocities and impact accelerations independently of the characteristics of the lunar terrain.

Lateral members are used in the track construction to constrain the unloading tracks from twisting and separating during MOLAB unloading. This feature will permit a more stable roll attitude for the

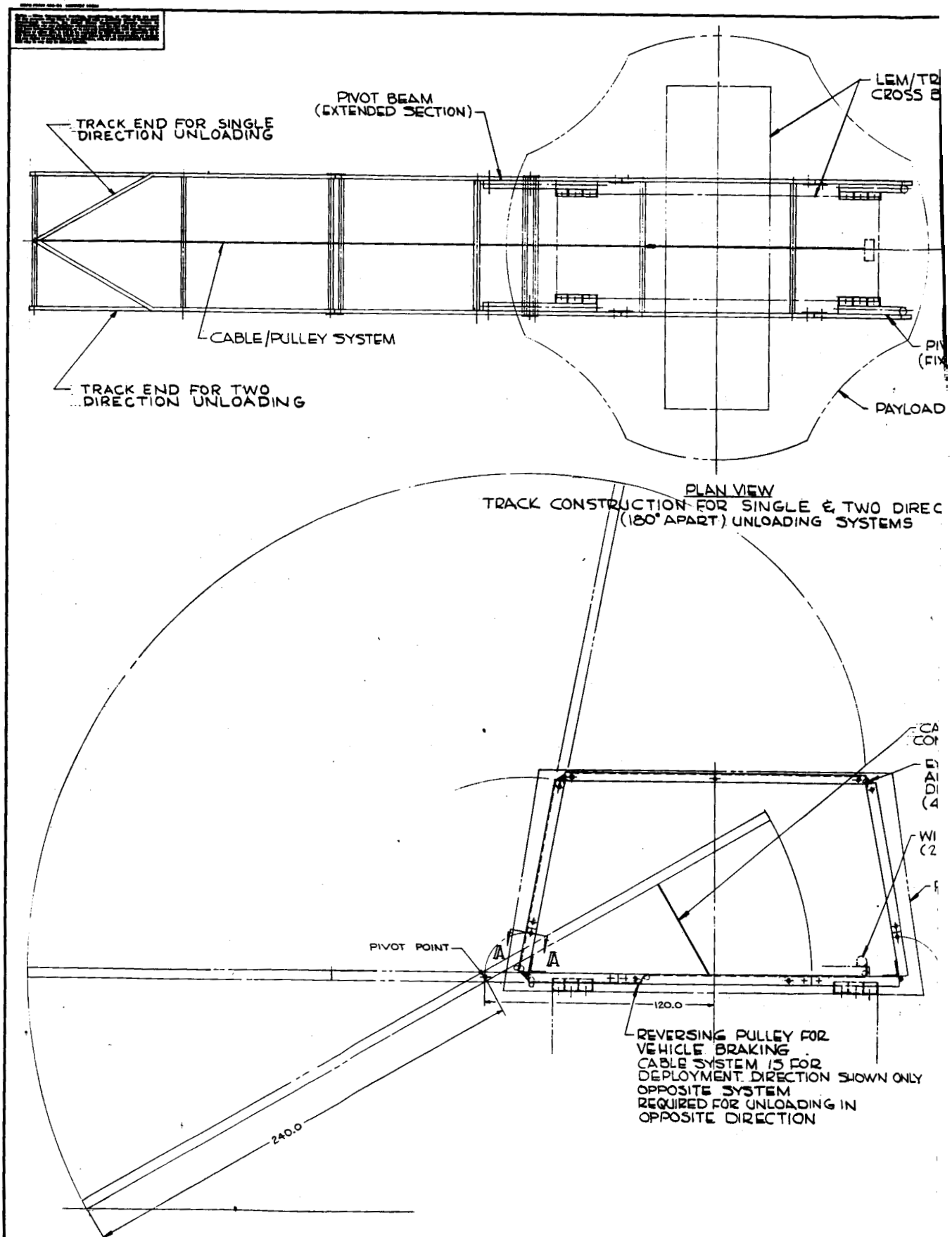
TRACK END FOR SINGLE DIRECTION UNLOADING
PIVOT BEAM (EXTENDED SECTION)
LEM/TR
CROSS B
CABLE/PULLEY SYSTEM
TRACK END FOR TWO DIRECTION UNLOADING
PAYLOAD
PLAN VIEW
TRACK CONSTRUCTION FOR SINGLE & TWO DIREC
(180° APART) UNLOADING SYSTEMS
PIVOT POINT
A
A
120.0
240.0
REVERSING PULLEY FOR VEHICLE BRAKING
CABLE SYSTEM IS FOR DEPLOYMENT DIRECTION SHOWN ONLY
OPPOSITE SYSTEM REQUIRED FOR UNLOADING IN OPPOSITE DIRECTION

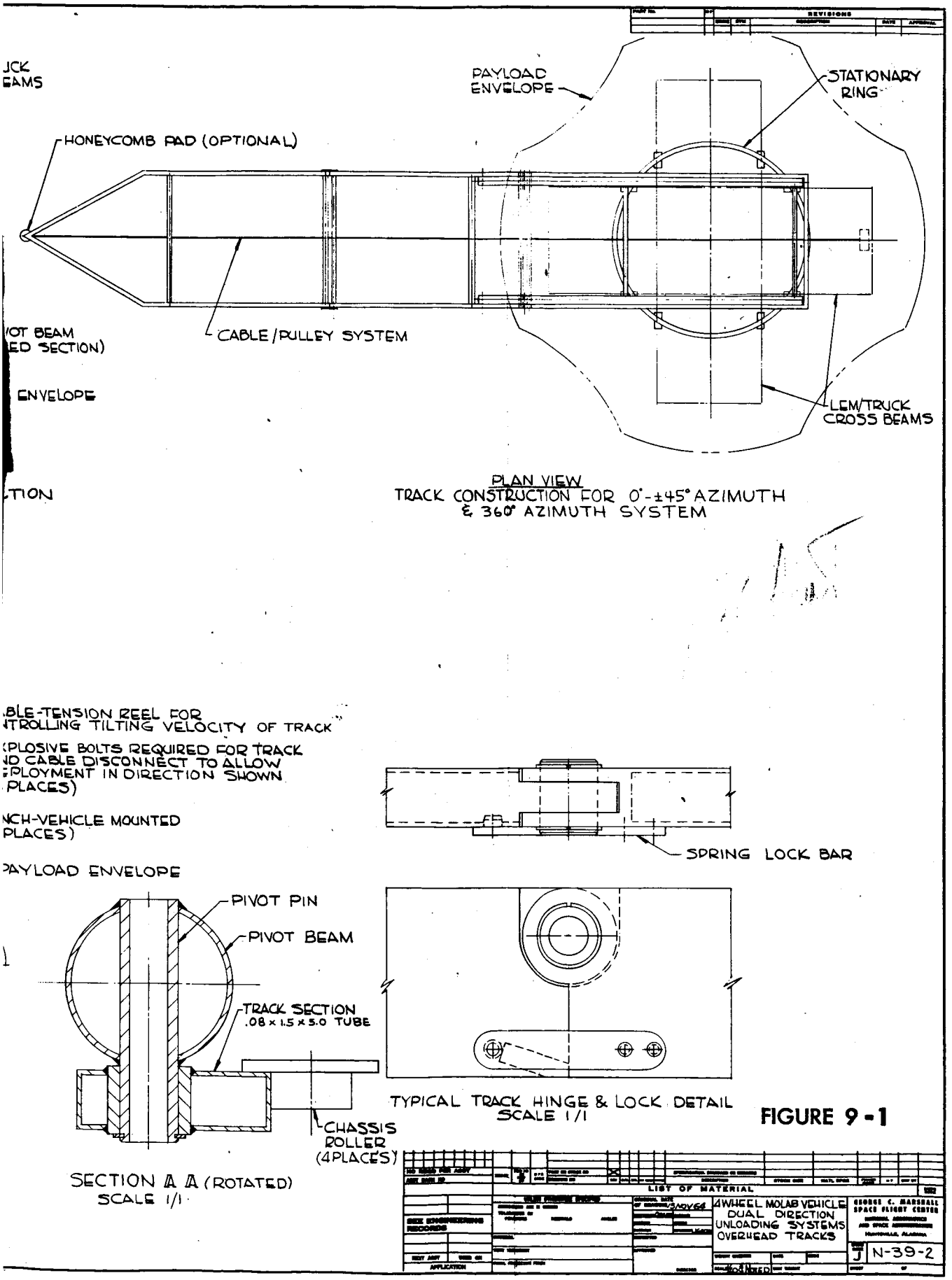
JCK
EAMS
HONEYCOMB PAD (OPTIONAL)
PAYLOAD ENVELOPE
STATIONARY RING
CABLE/PULLEY SYSTEM
OT BEAM
ED SECTION)
ENVELOPE
LEM/TRUCK CROSS BEAMS
TION
PLAN VIEW
TRACK CONSTRUCTION FOR 0°-±45° AZIMUTH & 360° AZIMUTH SYSTEM
BLE-TENSION REEL FOR
NTROLLING TILTING VELOCITY OF TRACK
XPLOSIVE BOLTS REQUIRED FOR TRACK
ND CABLE DISCONNECT TO ALLOW
EPLOYMENT IN DIRECTION SHOWN
PLACES)
NCH-VEHICLE MOUNTED
PLACES)
PAYLOAD ENVELOPE
SPRING LOCK BAR
PIVOT PIN
PIVOT BEAM
TRACK SECTION
.08 x 1.5 x 5.0 TUBE
CHASSIS ROLLER (4 PLACES)
SECTION A A (ROTATED)
SCALE 1/1
TYPICAL TRACK HINGE & LOCK DETAIL
SCALE 1/1
LIST OF MATERIAL
4 WHEEL MOLAB VEHICLE
DUAL DIRECTION
UNLOADING SYSTEMS
OVERHEAD TRACKS
GEORGE C. MARSHALL SPACE FLIGHT CENTER
J
N-39-2

FIGURE 9-1

2 #

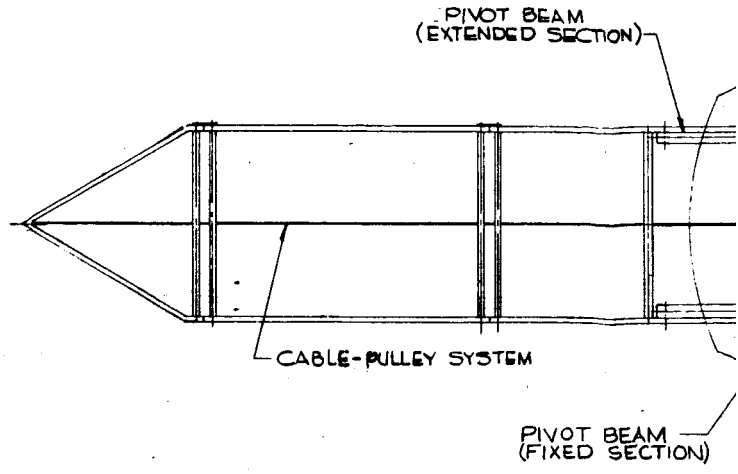
PIVOT BEAM
(EXTENDED SECTION)
CABLE-PULLEY SYSTEM
PIVOT BEAM
(FIXED SECTION)

FOLDIN

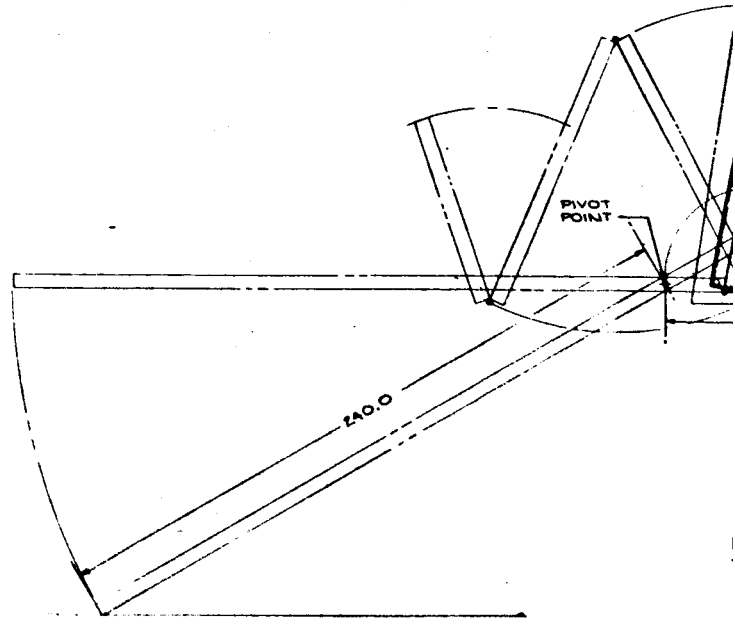
PIVOT
POINT
240.0

1 #

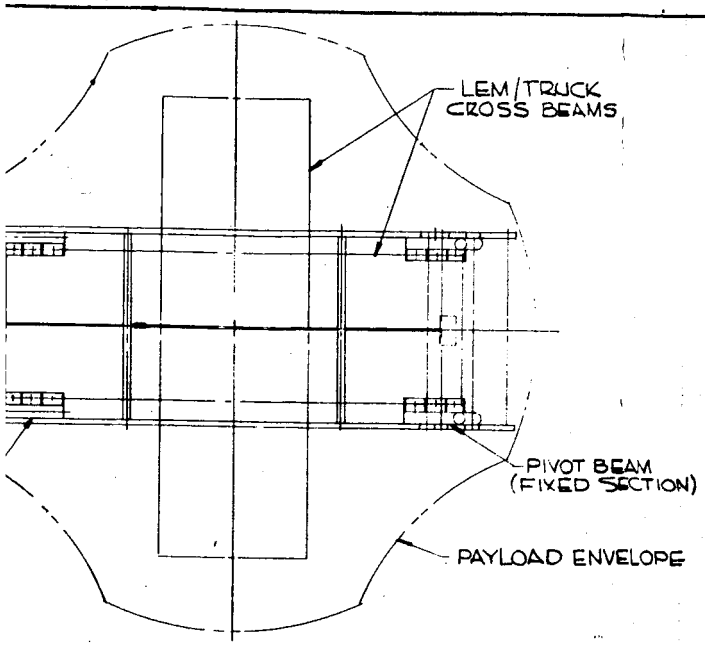


PLAN VIEW

TRACK CONSTRUCTION FOR SINGLE DIRECTION & TWO DIRECTION (180° APART) UNLOADING SYSTEMS

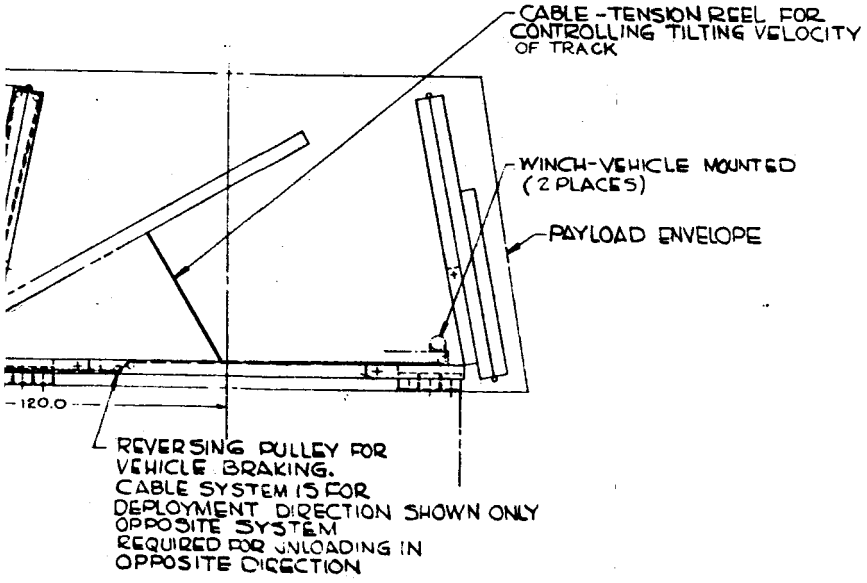


E - SEE FIGURE 9-1 FOR TYPICAL
CK PIVOT DETAIL AND TRACK
GE & LOCK DETAIL

FIGURE 9 - 2

2#

MOLAB during the unloading process. The unloading sequence given in Section 9.2.1 applies for this type of unloading system excepting for the azimuth positioning on the turntable, which is nonexistent for this system.

### 9.2.3 TWO DIRECTION (180° Apart) UNLOADING SYSTEM

The two direction unloading systems are presented in Figures 9-1 and 9-2. The 4B-1 system shown in Figure 9-1 has an overhead track section common to tracks used for deployment in either direction. To allow deployment in either direction one track connection and cable must be explosively disconnected as noted in Figure 9-1. The vertical track section not used for unloading is spring loaded to swing away, when freed, to prevent damaging MOLAB. The 4B-2 system shown in Figure 9-2 utilizes folding tracks at either end for unloading. Both the 4B-1 and 4B-2 systems will require MOLAB mounted winches at the forward and rear end of the vehicle requiring explosive disconnect of one cable before track extension can proceed.

The track and pivot beam operation and construction details are given in Section 9.2.2 for the 4B-1 and 4B-2 systems. One exception is the single point track end for the 4B-1 system. To allow the commonality with the overhead track section, a single point lunar surface contact track end cannot be used. This system requires the track end shown in Figure 9-1. The unloading sequence for this type of unloading system parallels the sequence furnished in Section 9.2.1 excepting for azimuth positioning.

### 9.2.4 FULL OR 360° AZIMUTH UNLOADING SYSTEMS

The full or 360° azimuth unloading system is shown in Figure 9-3. As noted in Figure 9-3 the details of the chassis track construction and the kinematics of track extension are given in Figure 9-1. The 4D-1 unloading system includes a stationary ring fixed at eight points to the LEM/T cross beams. The pivot beams are secured to the stationary ring through eight self aligning rollers. The rollers are attached in pairs to four hangers which are in turn secured to the pivot beams. Lateral members are required on the pivot beams to keep the assembly in position. The MOLAB loads during unloading are transmitted from the chassis tracks to the pivot pin, back through the pivot beam into the rollers and through the roller into the stationary ring which is fixed to the LEM/T.

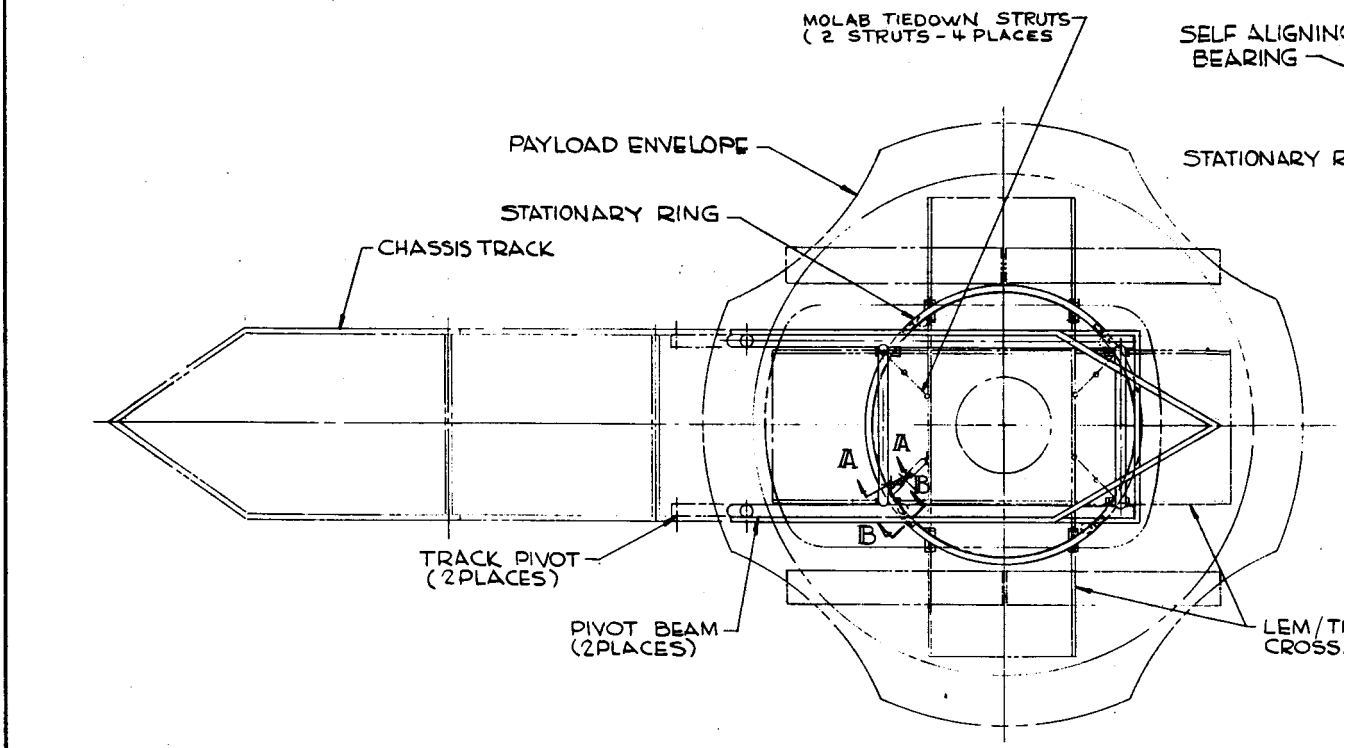


PLAN VIEW

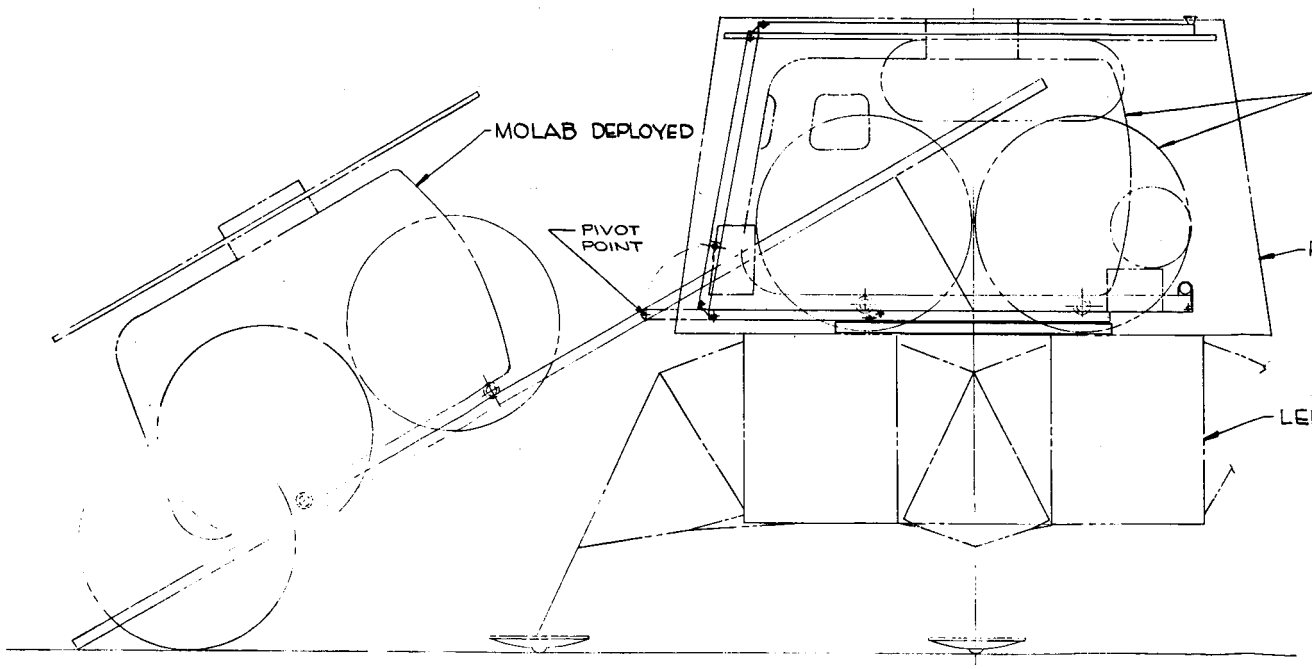


ELEVATION VIEW

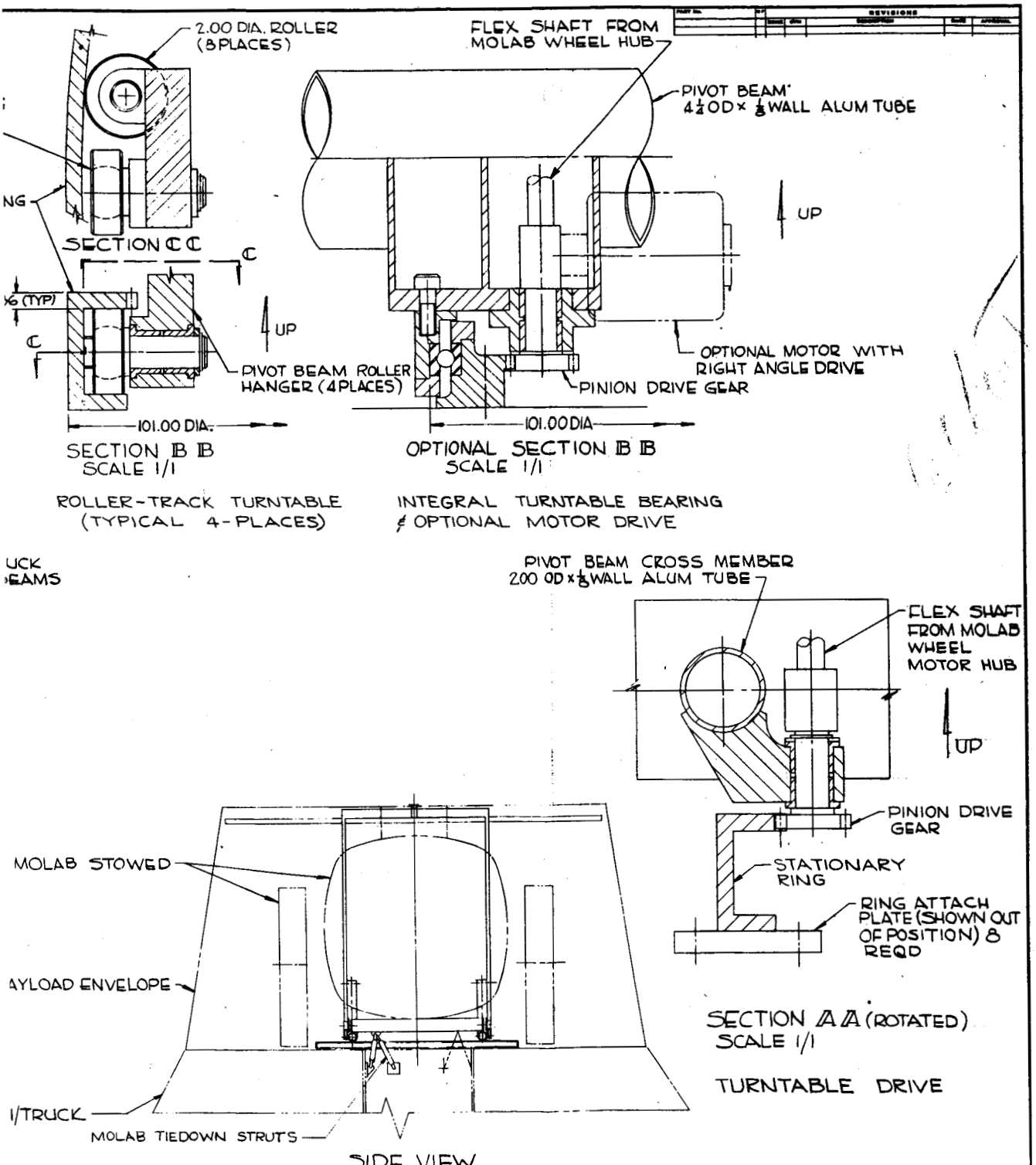
2.00 DIA. ROLLER (8 PLACES)
FLEX SHAFT FROM MOLAB WHEEL HUB
PIVOT BEAM 4 1/4 OD × 1/8 WALL ALUM TUBE
UP
SECTION CC
PIVOT BEAM ROLLER HANGER (4 PLACES)
OPTIONAL MOTOR WITH RIGHT ANGLE DRIVE
PINION DRIVE GEAR
101.00 DIA.
SECTION BB SCALE 1/1
OPTIONAL SECTION BB SCALE 1/1
ROLLER-TRACK TURNTABLE (TYPICAL 4-PLACES)
INTEGRAL TURNTABLE BEARING & OPTIONAL MOTOR DRIVE
PIVOT BEAM CROSS MEMBER 2.00 OD × 1/8 WALL ALUM TUBE
FLEX SHAFT FROM MOLAB WHEEL MOTOR HUB
PINION DRIVE GEAR
STATIONARY RING
RING ATTACH PLATE (SHOWN OUT OF POSITION) 8 REQD
SECTION AA (ROTATED) SCALE 1/1
TURNTABLE DRIVE
MOLAB STOWED
MOLAB TIEDOWN STRUTS
SIDE VIEW
NOTES
1. SEE FIGURE 9-1 FOR DETAILS OF TRACK CONSTRUCTION AND FOR THE KINEMATICS OF TRACK EXTENSION
LIST OF MATERIAL
4 WHEEL MOLAB VEHICLE 360° AZIMUTH UNLOADING & TIEDOWN SYSTEM
6 NOV 64
GEORGE C. MARSHALL SPACE FLIGHT CENTER
NATIONAL AERONAUTICS AND SPACE ADMINISTRATION
Huntsville, Alabama
J N-39-4
DESIGNED BY NORTHROP SPACE LABORATORIES

FIGURE 9 - 3

The bottom horizontal track sections are secured to the pivot beams for shipment. Four bolts are explosively deployed to free the track from the pivot beams thereby allowing track inclination about the pivot point during vehicle unloading. A cable-tension reel is used to control the track tilting velocities during vehicle unloading.

The turntable motor drive recommended for MOLAB is shown in Section A-A of Figure 9-3. A flexible shaft is attached to one of the MOLAB wheel hubs and is shown as the drive member for a pinion drive gear. The pinion gear drives against a ring gear which is integral with the stationary ring. Turntable rotation in this manner will take advantage of the MOLAB wheel drive and remote control systems and will allow precise azimuth positioning without requiring any additional controls. The flexible cable connection must be explosively deployed before unloading MOLAB. An optional, separate turntable motor drive system is shown in Section B-B of Figure 9-3. The separate motor will require a right angle drive system due to the limited space available for the unloading equipment.

The 4D-2 unloading system configuration is also shown in Figure 9-3, Section B-B. This system is the same as 4D-1 excepting for the use of an integral bearing in place of the four pairs of intermittent rollers. This design is probably heavier due to the combined bearing and bearing housing weight. Part of this weight increase is offset by the elimination of the pivot beam cross members and the reduced weight of the stationary ring. The 4D-1 stationary ring cross section is sized by the roller loads. The more uniform load distribution obtained with the integral bearing of the 4D-2 design results in a decrease in stationary ring section size. The use of an integral turntable bearing should permit the manufacturer to establish structural adequacy of the bearing by test. Due to the close tolerance manufacturing techniques and excellent quality control procedures, typical of the bearing industry, greater confidence in prototype bearing integrity and performance can be realized in an integral bearing compared to "hand-built" bearing systems. This assumes greater importance when the size of the turntable and thermal expansion from -250°F to +250°F are taken into consideration.

### 9.2.5 0° TO ±45° AZIMUTH UNLOADING SYSTEMS

A sketch of an unloading system, 4C-1, having 0° to ±45° azimuth capability is shown in Figure 9-4. A pivot beam using three suspended pairs of rollers is shown. The rollers rotate around the

TURNTABLE & PIVOT BEAM
CONCEPTUAL DESIGN 0 TO ±45° AZIMUTH CAPABILITY

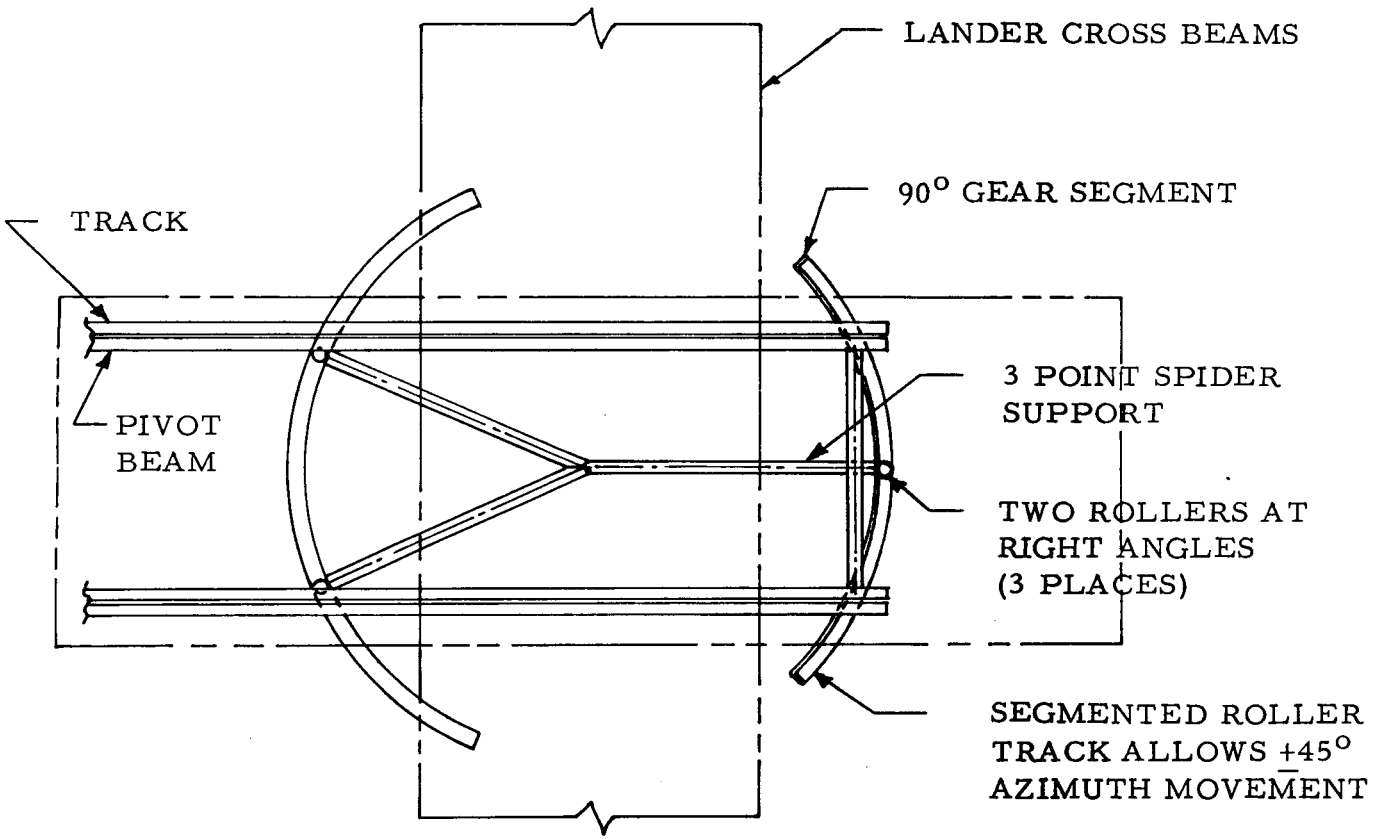


FIGURE 9-4

segmented 225° of circular track. A 90° ring gear segment is required for azimuth positioning. The circular track is fixed at six points to the lander cross beams. Little advantage accrues from this system over a system having full 360° azimuth capability. The weight saving resulting from the elimination of 135° of circular track is offset by the increased circular track cross section required to carry the higher loads that must be carried by three pairs of rollers instead of the four pairs used in system 4D-1. All other items of unloading equipment used with system 4C-1 are the same as used with system 4D-1.

## 9.3 UNLOADING SYSTEMS FOR A SIX WHEEL SEMI-ARTICULATED VEHICLE

In this section the unloading and tiedown systems developed for use with the six wheel semiarticulated vehicle will be discussed.

Two fundamentally different types of concepts were considered for the six-wheel vehicle. One utilizes wheel tracks and the other uses chassis tracks. From these basic concepts, additional systems were developed which possess varying degrees of directional unloading capability.

One factor is common to all of the unloading systems developed for this vehicle (both wheel-tracks and chassis-tracks). This factor is, that space for storing all of, or a major portion of, the track is available only under the vehicle. This is apparent upon examination of Figure 3-2.

Several factors are common to the wheel-track systems. Since the forward wheels of the crew-compartment section of the vehicle are toed in for storage, and since the wheels are supported from the track housing, the extendable track stored under the vehicle wheels must not interfere with the portion of the track housing that rotates with the vehicle's forward wheels. This then places a track length restriction on all wheel track systems.

To satisfy this condition and to obtain the track length necessary to maintain an adequate margin of vehicle stability and unloading clearance, the wheel tracks must be folded in hinged sections under the vehicle wheels.

Since the payload envelope allocates only three inches for unloading structure under the vehicle wheels, and since the extendable

track must be folded, additional restriction is placed on the wheel track systems. This latter restriction dictates the use of a less desirable structural cross section, i.e., a cross section having a low bending modulus and consequently a low strength to weight ratio.

The only prime factor common to both the wheel track and the chassis track systems is the track storage restriction.

One basic tiedown concept was developed for use with all of the unloading systems presented. Minor modifications were made to the basic tiedown concept where necessary to maintain compatibility with the unloading system and the unloading sequence. The tiedown structure consists of vertical telescoping tubular struts with diagonal tension members (cable) attached to the vehicle's under structure and the LEM/T primary structure. The struts transmit the vertical landing loads to the LEM/T primary structure, while the diagonal tension members transmit the horizontal landing loads. A schematic of the tiedown structure is shown in Figure 9-5. The modifications made to this basic concept will be indicated in the discussion of the individual unloading systems.

To accomplish the vehicle unloading phase of the AES mission several operations must be accomplished. They are:

(a) Extend antennae for use in remotely controlled operations.
(b) Release tiedown restraints
(c) Rotate vehicle to desired position (for systems having multi-azimuth capability only).
(d) Extend tracks
(e) Unload vehicle
(f) Extend trailer

The actual sequence in which these events can, or should occur depend on the particular unloading system and the postulated lunar surface contour, i.e., hilly, gentle slopes, etc. Table 9-1 indicates the recommended unloading sequence (using the letter designation of events listed above) for the systems presented herein, with the exception of the $\pm 45^{\circ}$ multidirectional system. The reason for omitting the multidirectional system will become obvious later in the report.

Further elaboration on the unloading sequence will be given subsequently.

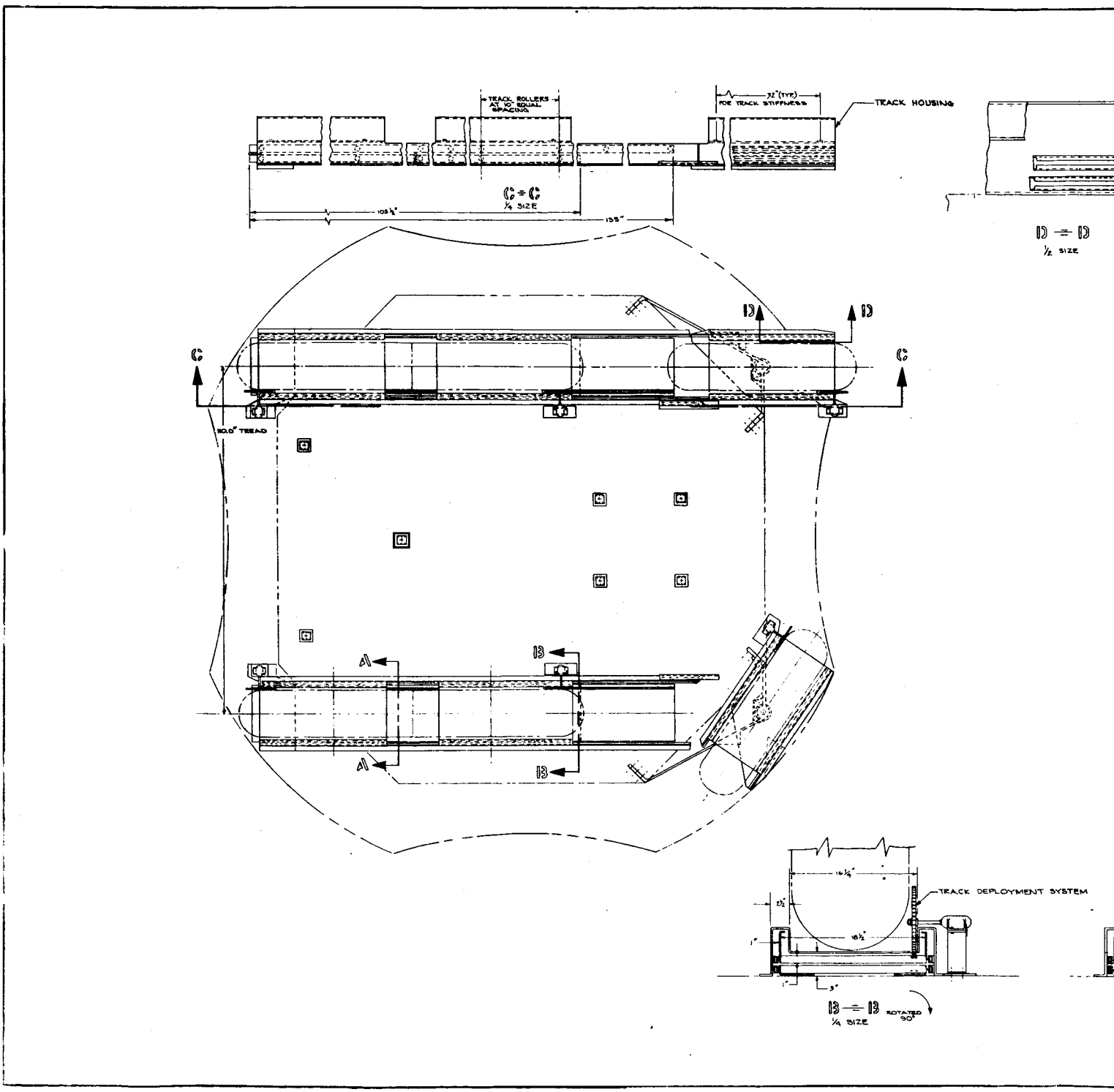
TRACK ROLLERS AT 10" EQUAL SPACING
12" (TYP) FOR TRACK STIFFNESS
TRACK HOUSING
C = C
¼ SIZE
105¾"
135"
D = D
½ SIZE
C
C
D
D
101.0" TREAD
A
A
B
B
TRACK DEPLOYMENT SYSTEM
16¼"
2½"
16½"
1"
1"
3"
B = B ROTATED 90°
¼ SIZE

14

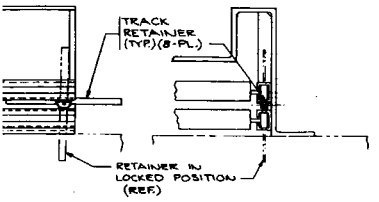


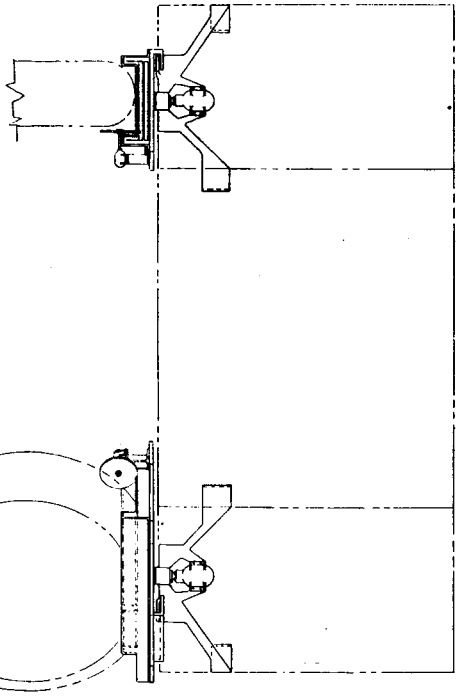

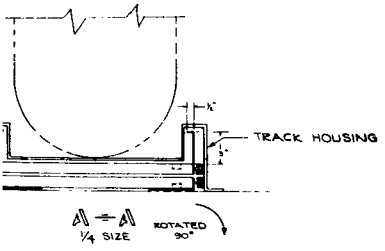


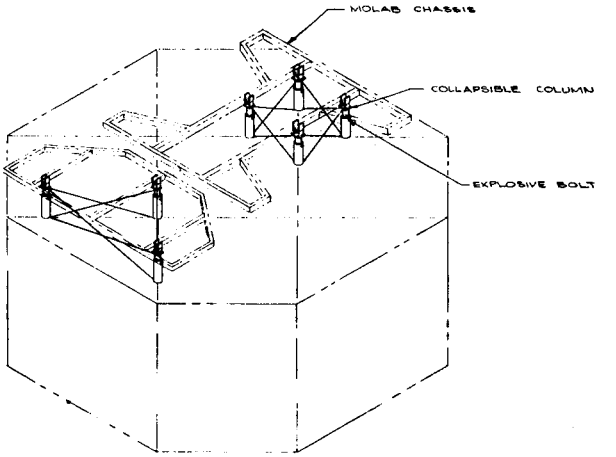


SCHEMATIC OF TIE-DOWN POSTS
NO SCALE

DESIGNED BY NORTHROP SPACE LABORATORIES

**FIGURE 9 - 5**

TIE-DOWN AND
UNLOADING SYSTEM
6-WHEEL VEHICLE
1 OR 2 DIRECTIONS

N-39-5



27

TABLE 9-1
VEHICLE UNLOADING SEQUENCE

| SYSTEM | | SEQUENCE OF EVENTS | | | | | | |
|---|---|---|---|---|---|---|---|---|
| | | 1 | 2 | 3 | 4 | 5 | 6 | 7 |
| Wheel Tracks | Single Direction | a | b | d | e | f | | |
| | Two Directions | a | b | d | e | f | | |
| | Multi-Azimuth (0-360) | a | b | c | d | b | e | f |
| Chassis Tracks | Single Direction | a | d | b | e | f | | |
| | Two Directions | a | d | b | e | f | | |
| | Multi-Azimuth | a | d | b | c | e | f | |

As mentioned in Section 2.0 of this report, one of the objectives of the study was to determine the weight penalties associated with varying the degree of directional unloading capability. Also mentioned in Section 2.0 were the unloading directions to be considered. They were:

- Single fixed direction
- Two directions (180° apart)
- Multiazimuth 0-360°
- Multidirectional within ±45° of the vehicle's longitudinal axis.

Each of these directional capabilities will be discussed in the order presented above for the wheel track systems and the chassis track systems respectively.

### 9.3.1 SINGLE FIXED AND TWO DIRECTIONAL UNLOADING SYSTEMS (WHEEL TRACKS)

Figure 9-5 shows an unloading concept capable of unloading in one or two directions (180° apart). This same system can also be used for the case of a single fixed unloading direction by removing one pair of the drive mechanisms located at either end of the track housing.

As shown in Figure 9-5, the track must be extended from the track housing toward the rear of the vehicle. When the shorter segment of the track, which is folded under, clears the track housing, a spring loaded hinge swings this shorter track section through a 180° arc. A

locking device is engaged at termination of the short track segment's swing to form the continuous full length track necessary for unloading the vehicle. In the event the direction in which the track has been partially extended is found to be desirable for the purpose of unloading, the extension is continued until the track retainers, located at the end of the guide rails, are engaged. Since the engaged track retainers provide a pin joint, the track will pivot, due to its own weight, until the free end contacts the lunar surface. If the direction in which the track has been partially extended is not a desirable unloading direction, the drive mechanism is reversed and the track is extended in the opposite direction.

As shown in Figure 9-5 retainer plates have been provided on the tracks for the vehicle wheels. The retainers on the upper portion of the folded track are fixed as shown. Due to the limitations placed on the storage space, the retainers on the lower track segment are mounted with spring loaded hinges capable of movement through a $90^{\circ}$ arc. As the lower track portion clears the track housing the wheel retainer sections are forced into place.

The front wheels of the six wheeled vehicle are toed in for storage. The forward portion of the track housing is therefore designed to be rotated with these wheels to their normal operational position. The vehicle steering mechanism should be used to straighten the forward wheels and track housing if possible. Due to the lack of information available to ascertain the feasibility of this approach a pivot bracket and motor have been provided to rotate the track housing and vehicle wheels.

In addition to serving as a track support and guide device during the track extension operation, the track housing provides support for the vehicle wheels. This support reduces the shock loads transmitted through the vehicle suspension system during lunar landing, and prevents any interference between the vehicle wheels and track during the track deployment operation.

Rollers have been attached to the sides of the track. The rollers fit into the guide rails attached within the track housing. This arrangement is considered beneficial, in that only rolling resistance to motion is encountered rather than sliding resistance. The power required to extend the tracks is thereby minimized.

The tiedown structure used with this unloading system employs telescoping struts. The struts are rigidly attached to the LEM/T

primary structure. An explosive bolt is used to prevent the strut telescoping action from occurring until the proper time. Explosive bolts or similar devices are also used to make the vehicle tiedown structure attachment. Strut telescoping action is provided so that the tiedown structure remaining on the LEM/T does not interfere with the vehicle unloading clearance.

### 9.3.2 MULTIAZIMUTH 0-360° UNLOADING SYSTEM (WHEEL TRACKS)

This system is essentially the same as the single fixed direction system, Figure 9-6. The track storage problem has been aggravated due to the addition of turntable rollers under the track housing. This required the use of tracks (of truss core sandwich plate construction) having a smaller total thickness than those used for the single direction system. To offset the reduction in section modulus due to the smaller section depth, the sandwich plate face sheet thickness was increased. Consequently, an increase in track weight was experienced over that of the single direction system.

In order to provide the multiazimuth feature, the track housing was separated from the LEM/T deck. A ring for azimuth positioning of the tracks was mounted to the LEM/T deck. Rollers for riding within the ring were affixed to the track housing and azimuth drive motors were added. Two cross members were also added to provide a direct attachment between the two track housing units. The cross members maintain track alignment during azimuth positioning.

The tiedown structure was changed slightly for this system. The attachment to the LEM/T primary structure is accomplished through a bolted connection. Prior to azimuth positioning, the LEM/T tiedown structure connection is released. The vehicle and that portion of the tiedown structure attached to it will rise. Upward motion of the vehicle is due to the release of energy stored in the wheels, compressed on the track housing.

As the vehicle is positioned for the proper unloading direction, a portion of the tiedown structure is carried along. When the desired azimuth is reached the vehicle attached tiedown structure is dropped from the vehicle to the LEM/T deck. The vehicle is then unloaded.

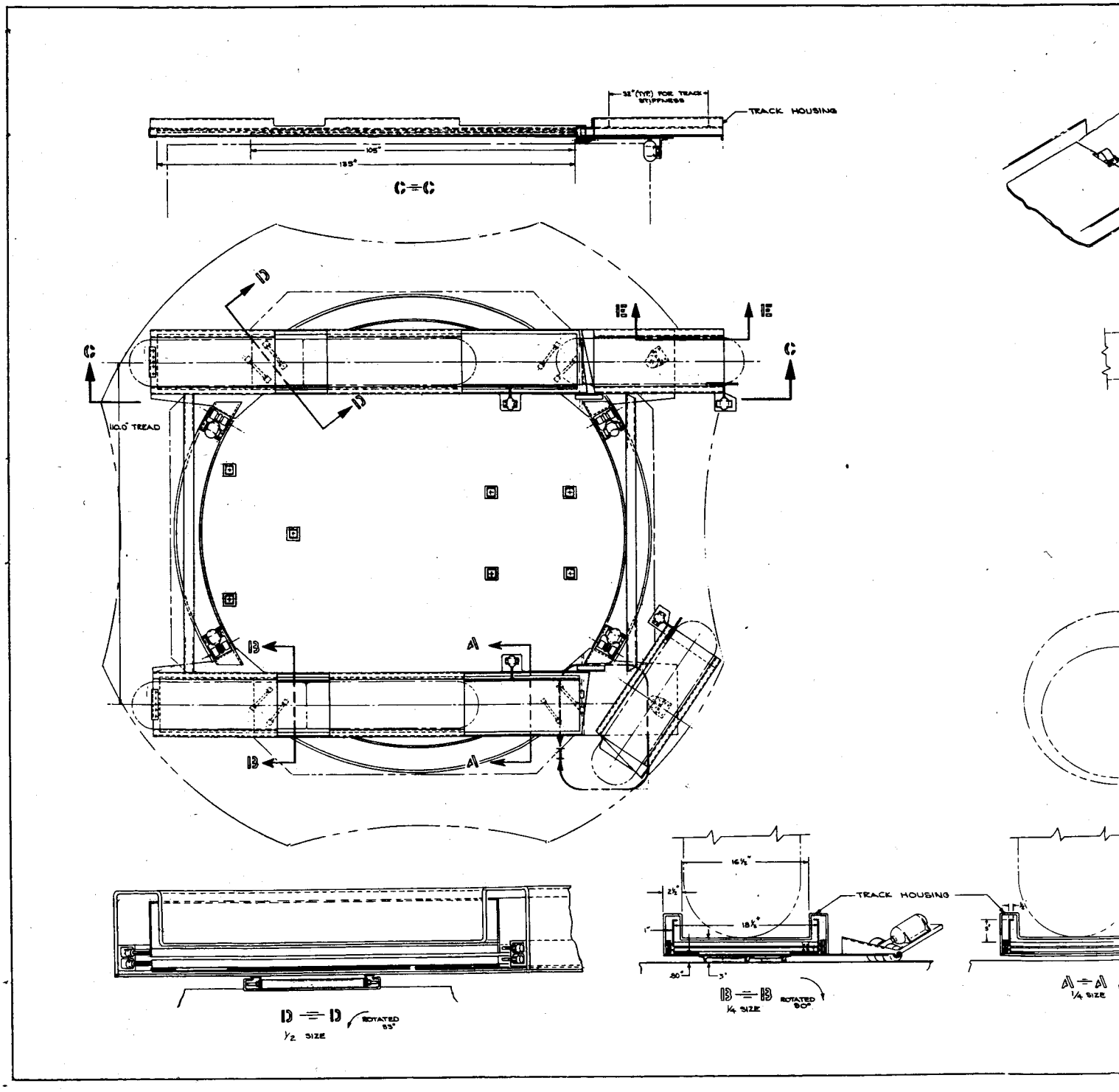
TRACK HOUSING
105"
135"
C=C
D
E
C
110.0" TREAD
B
A
D=D
ROTATED 53°
1/2 SIZE
16 1/2"
2 1/2"
18 1/4"
1"
.80"
3"
TRACK HOUSING
B=B
ROTATED 90°
1/4 SIZE
A=A
1/4 SIZE

1#

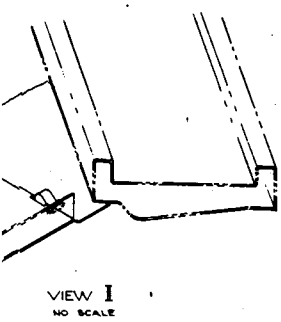

VIEW I
NO SCALE

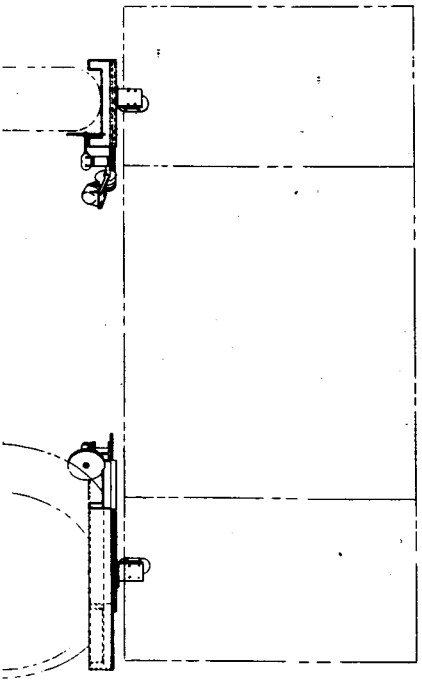

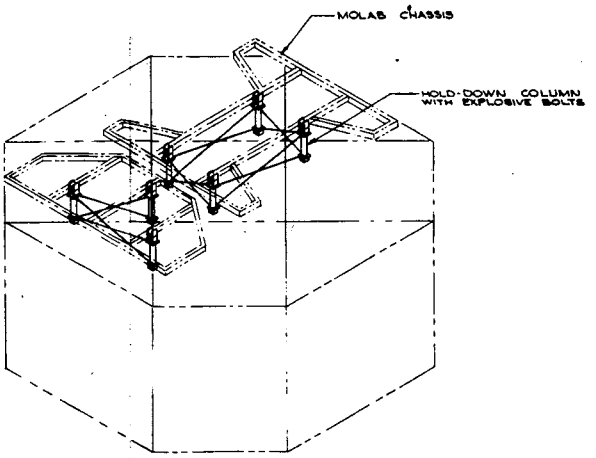


SCHEMATIC OF TIE-DOWN POSTS
NO SCALE

SCHEMATIC OF UPPER & LOWER TRACK ASSY.

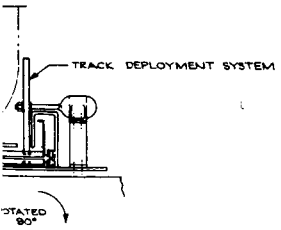


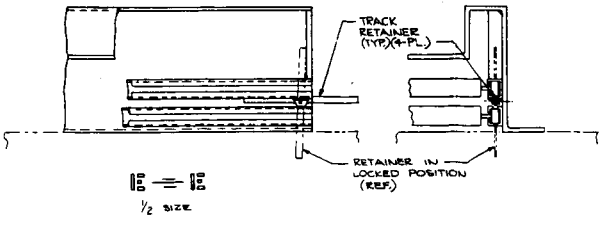


**FIGURE 9-6**

TIE-DOWN AND UNLOADING SYSTEM
6-WHEEL VEHICLE
360° AZIMUTH

N-39-6

DESIGNED BY NORTHROP SPACE LABORATORIES



2#

### 9.3.3 MULTI DIRECTIONAL $\pm 45^{\circ}$ UNLOADING SYSTEM (WHEEL TRACKS)

The $\pm 45^{\circ}$ azimuth capability unloading system offers no weight saving or other advantage over the multiazimuth $0\text{-}360^{\circ}$ system. In actuality, the system required to provide the $\pm 45^{\circ}$ unloading was identical to the $0\text{-}360^{\circ}$ system. The prime factors producing this result were the ring diameter, wheel base and the location of the track housing rollers.

### 9.3.4 SINGLE FIXED AND TWO-DIRECTIONAL UNLOADING SYSTEMS (CHASSIS TRACKS)

The chassis track unloading system shown in Figure 9-7 is capable of unloading in one or two directions. As in the case of the corresponding wheel track system, conversion to a single fixed direction system may be accomplished by removing one pair of drive mechanisms at either end of the tracks.

The chassis track system shown in Figure 9-7, consists of two track sections, a pivot beam (with its associated support structure) and the track drive motors (for the single fixed direction system a cable-pulley system may also be used). As shown in the exploded view (B-B) of Figure 9-7, the tracks are stored with the end portions in the vertical position utilizing almost all of the available space in front of and to the rear of the vehicle. To position the tracks for unloading, the upper track section and the pivot beam folded ends are straightened and locked, and the upper track is extended by the drive mechanism. When the upper track extension has proceeded sufficiently, the spring loaded pins, attached to the center track section, become aligned with the pin receptacles in the upper track and snap into place. The upper and center track sections thereby constitute a continuous member. The track extension is continued for a short distance (one or two inches) until the track retainer device shown in View I and II is engaged. The tracks will then be fully extended. The only track attachment to the LEM/T is via the pin joint at the end of the pivot beam. Upon release of the tiedown structure the vehicle will drop 1/4 of an inch allowing the chassis wheels to contact the track, the vehicle can then be driven off of the LEM/T deck by providing power to the chassis wheels. When the vehicle cg passes the pin joint at the end of the pivot beam the entire track (both the section over the LEM/T and the extended section) will pivot until the free end contacts the lunar surface. The impact loads the track will experience as a result of the pivoting action are minimized by providing an arresting cable on a spring wound rachet type reel.

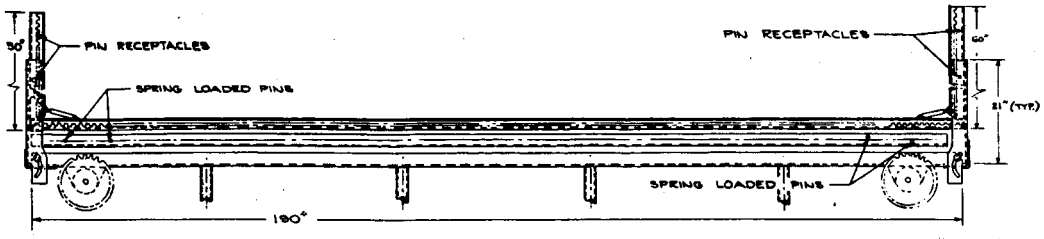


B — B

UPPER & CENTER TRACKS RAISED FROM THEIR RESPECTIVE POSITIONS FOR CLARITY

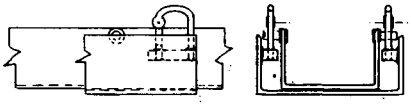

VIEW I
½ SIZE

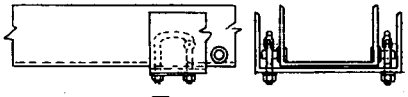

VIEW II
½ SIZE

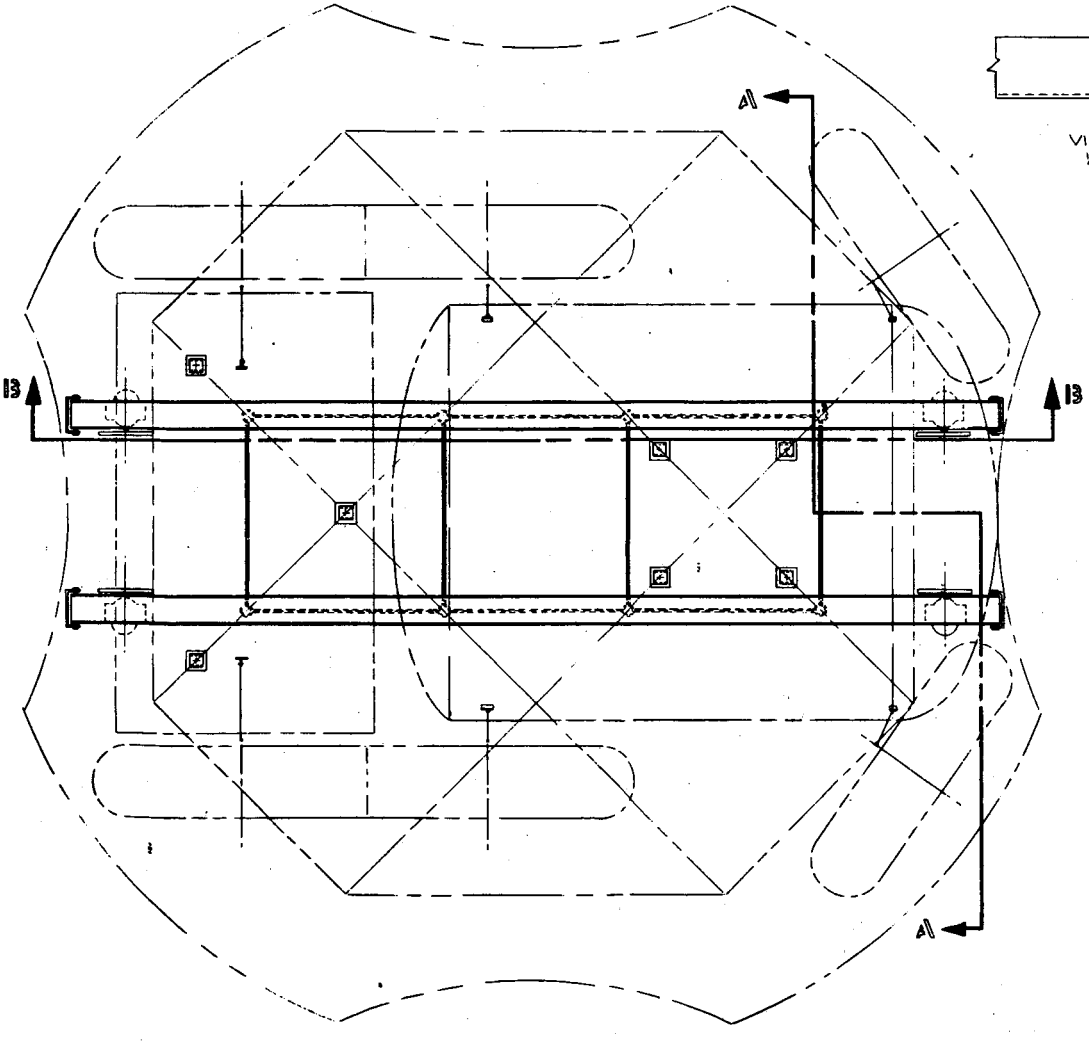


UPPER & CENTER TRACKS REMOVED FOR CLARITY

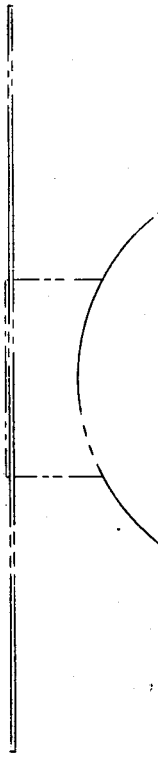

1#

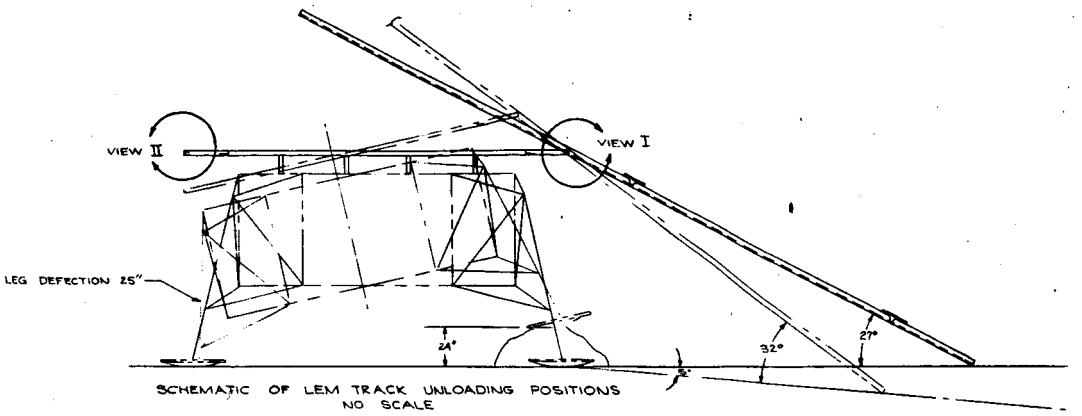


SCHEMATIC OF LEM TRACK UNLOADING POSITIONS
NO SCALE

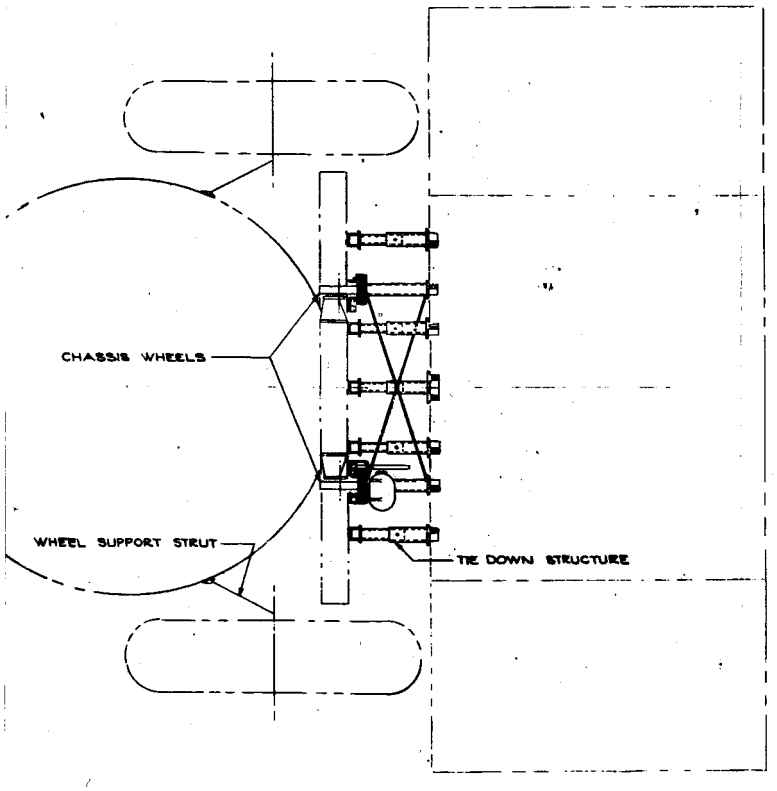


A — A

**FIGURE 9-7**

TIE-DOWN AND UNLOADING SYSTEM VIA CHASSIS TRACKS 6-WHEEL VEHICLE 1 OR 2 DIRECTIONS

DESIGNED BY NORTHROP SPACE LABORATORIES

IN-39-7



2#

Use is made of channel sections to carry the vehicle imposed bending loads. The channels are oriented to take bending about their weaker axis. In this way the channel legs provide a guide rail feature for the chassis wheels, system packaging and structure support problems were minimized, and undesirable torsional loads in the channels were avoided. Had the channels been oriented to take the primary bending loads about the stronger axis, the required chassis wheel design (see Figure 9-3) would have resulted in transmitting the vehicle loads directly to the channel web. These wheel loads would be offset from the channel shear center thereby causing an induced torsional effects to be superimposed on the primary bending effects. Since the channel section is restrained from warping, such twisting is reacted by bending in the flanges and web plus torsional shear. The overall effect in this instance would have been a heavier track if the channels were oriented to take bending about the strong axis.

During track extension the upper track slides within the center track. A lubricant should therefore be provided. KEL-F (Polychlorotrifluoroethelyne) appears to have satisfactory lubrication properties for use in the lunar vacuum environment. It is therefore advisable to coat the two contacting track surfaces with KEL-F.

The chassis wheels are serrated to provide sufficient traction for driving the vehicle off of the LEM/T. The chassis wheels are located under the crew compartment section of the vehicle and also under the trailer. This location reduces the vehicle's minimum ground clearance. The chassis wheel assemblies are therefore designed to be dropped after unloading has been accomplished, thereby restoring the vehicle's 24.0 inch ground clearance for traversing the lunar surface.

The tiedown system used for this system is identical to the one used with the single and two directional wheel track system.

### 9.3.5 MULTIAZIMUTH 0-360° UNLOADING SYSTEM (CHASSIS TRACKS)

The 0-360° multiazimuth system is shown on Figure 9-8. The tracks used here are the same as those used for the one and two directional systems. Track deployment is accomplished in the same manner previously used except that a cable-pulley system is employed in lieu of the drive mechanisms. Other elements of this system which are identical to the one and two directional systems are; chassis wheel assemblies, vehicle wheel support struts, and tiedown structure.

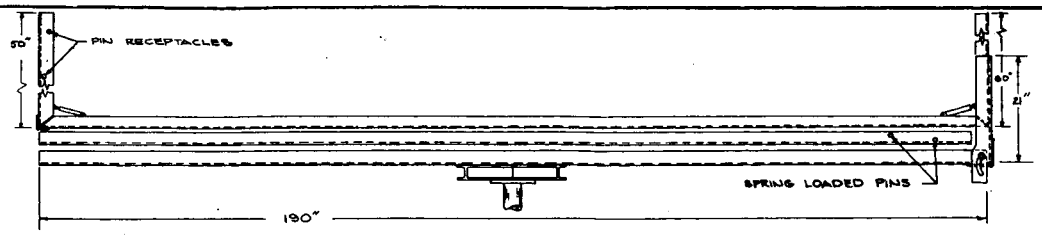


TRACK LAYOUT

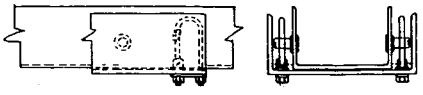

VIEW I
½ SIZE

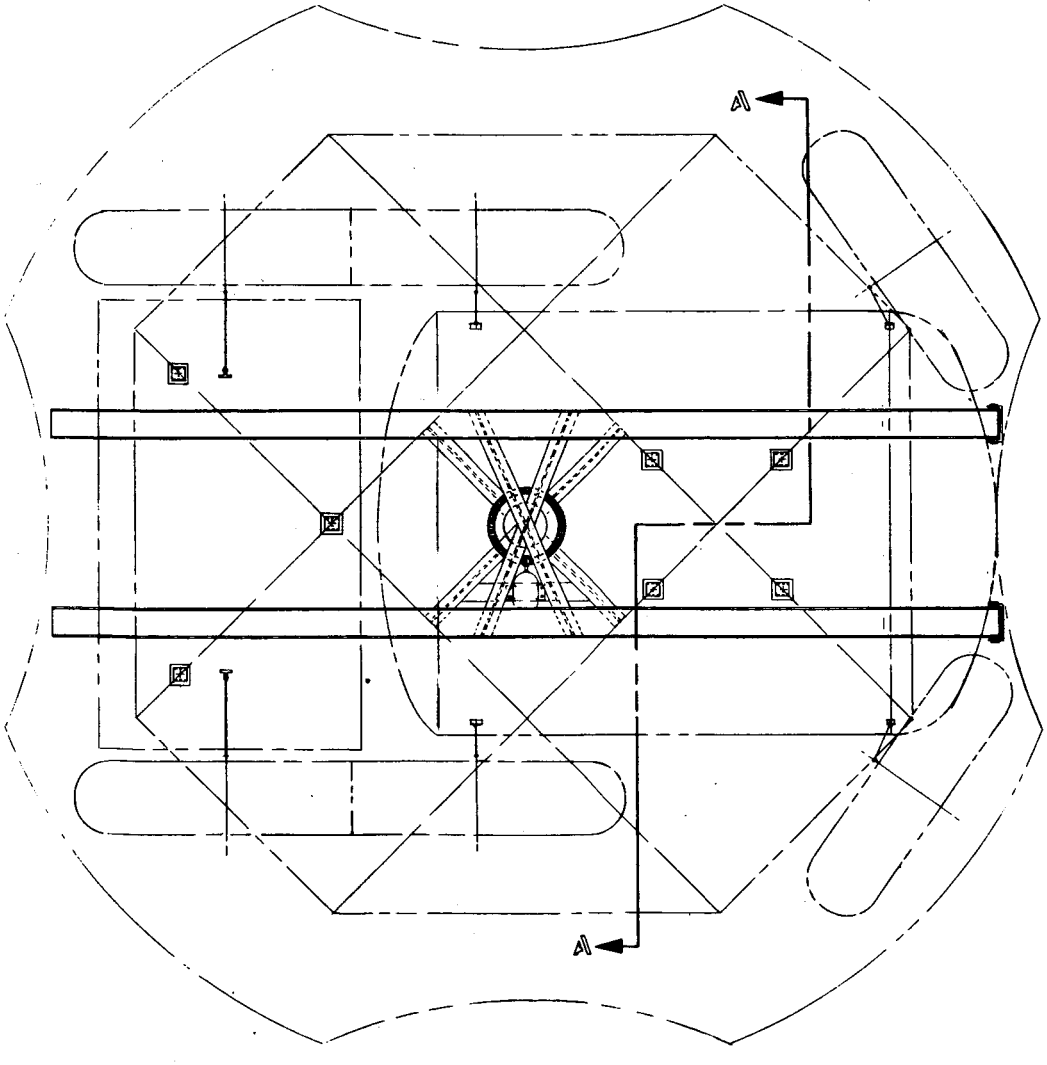


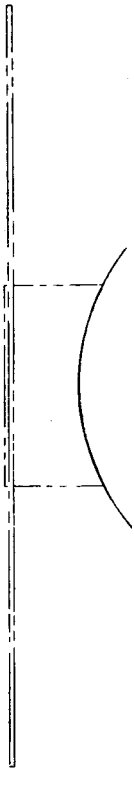

1 #

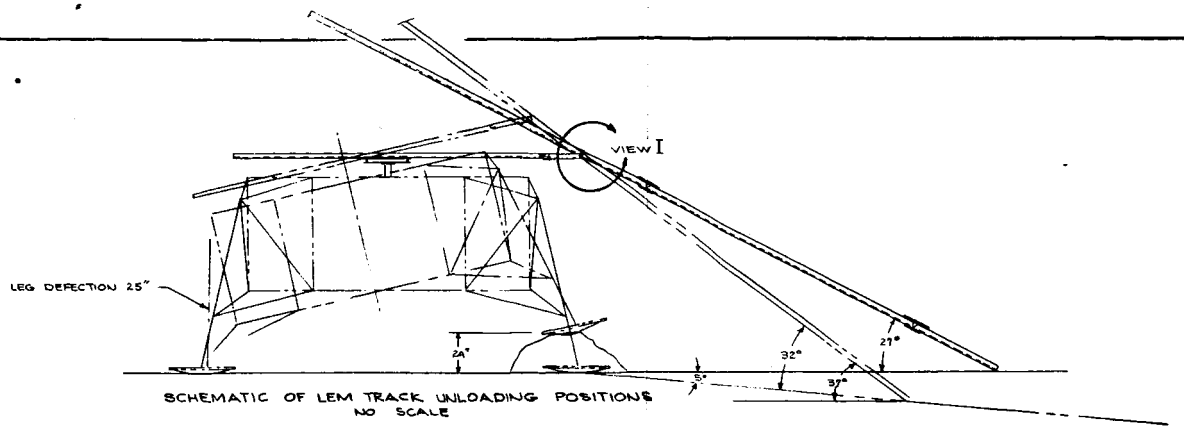


SCHEMATIC OF LEM TRACK UNLOADING POSITIONS
NO SCALE

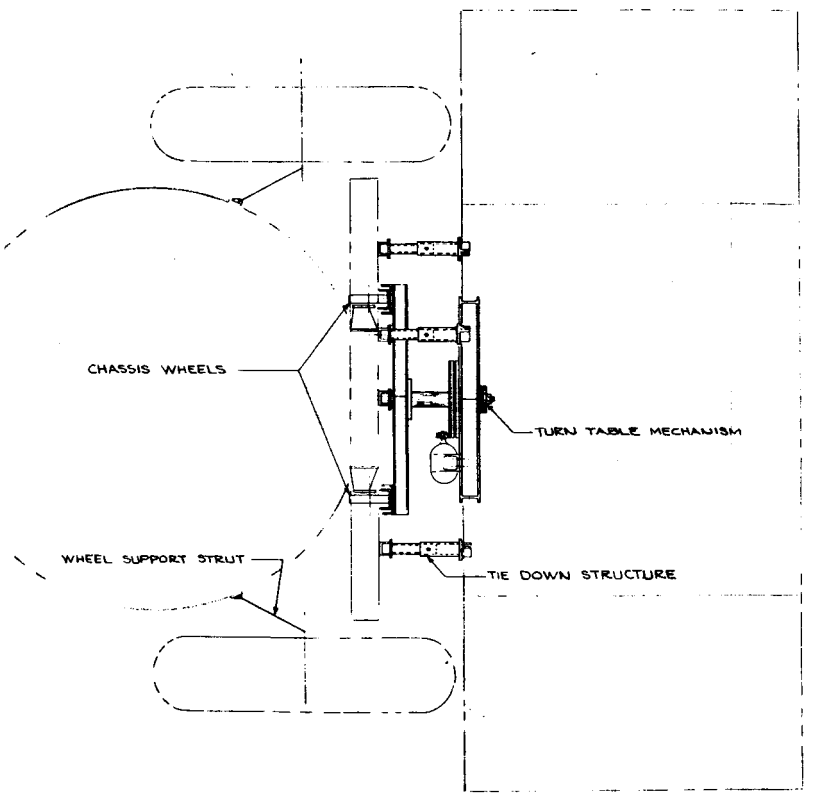


A — A

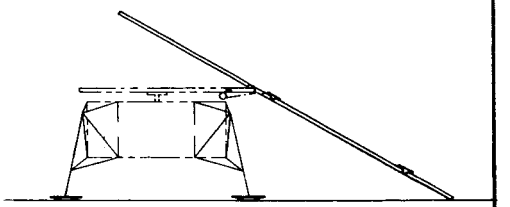

④ UPPER AND CENTER TRACKS EXTENDED UNTIL CENTER TRACK IS MATED WITH LOWER TRACK AT PIVOT POINT.

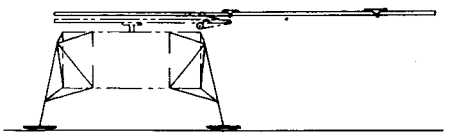

③ UPPER TRACK EXTENDED AND MATED WITH CENTER TRACK.

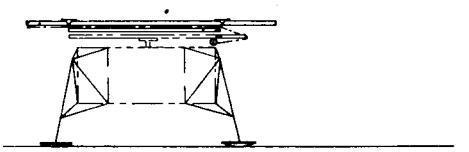

② TRACK ARMS LOWERED AND LOCKED.

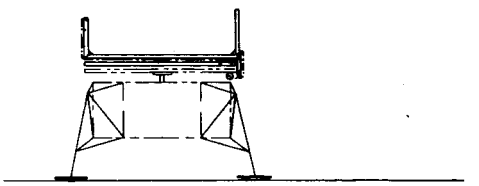

① TRACKS IN STORED POSITION.

FIGURE 9 - 8 TRACK DEPLOYMENT SEQUENCE

TIE-DOWN AND UNLOADING SYSTEM VIA CHASSIS TRACKS 6-WHEEL VEHICLE 360° AZIMUTH

N-39-8

DESIGNED BY NORTHROP SPACE LABORATORIES



2#

The multiazimuth capability is provided by the hub assembly located in the center of the LEM/T deck. The hub assembly consists of a shaft, a gear, a bearing, a motor, and spokes. This entire assembly is supported by cross members attached to the primary LEM/T structure.

The pivot beams are attached to the spoke members as shown. An increase in pivot beam weight, as compared to the two directional system, was experienced for this system due to the increased moment loads applied to the pivot beams.

The center support hub assembly was used here instead of a continuous ring support (such as was used for the multiazimuth wheel tracks) as a means of reducing the overall multiazimuth system weight.

### 9.3.6 MULTIDIRECTIONAL $\pm 45^{\circ}$ UNLOADING SYSTEM (CHASSIS TRACKS)

As in the case of the comparable wheel track system, no weight saving or other advantage was realized over the multiazimuth $0\text{-}360^{\circ}$ chassis track system.

### 9.3.7 UNLOADING SEQUENCE

The unloading sequences shown in Table 9-1, are applicable to each of the six wheel MOLAB unloading systems discussed in this section.

The last event occurring in the sequence prior to MOLAB being driven free of LEM/T, is trailer extension. As was mentioned earlier, the trailer is pulled in toward the crew compartment section for storage. Power is supplied either to all vehicle wheels, or to all the chassis wheels in each of the unloading systems. Trailer extension to the operational position may be accomplished by partially driving the crew compartment section off the LEM/T while holding the trailer's wheels locked. After the cabin section has been separated from the trailer, to the lunar surface operation position, the unloading sequence may be completed.

## 10.0 RELATED DESIGN ANALYSES

The parametric data generated in Section 8.0 will be used in this section along with other pertinent design criteria to demonstrate feasibility of the unloading systems presented in Section 9.0. The weight of each of the systems will also be presented. Loads and strength analyses for the major structural members are presented in the Technical Appendix.

## 10.1 MOLAB VEHICLE STABILITY

Vehicle stability is important and must be considered during the unloading operation. The pitch and roll stabilities for the four wheel and the six wheel semiarticulated vehicle were evaluated in this section.

### 10.1.1 FOUR WHEEL VEHICLE STABILITY

The vehicle geometry for the stability study is shown in Figure 10-1. The minimum stability angles are given below for the conditions noted.

| Vehicle Attitude | Ground or Track Contact Points for MOLAB | Minimum Stability Angle |
|---|---|---|
| Pitch | Chassis Rollers | $45^{\circ}$ |
| Pitch | Folded Wheels | $39.2^{\circ}$ |
| Pitch | Extended Front Wheels | $46.2^{\circ}$ |
| Roll | Chassis Rollers | $40.6^{\circ}$ |
| Roll | Wheels | $41^{\circ}$ |

### 10.1.2 SIX WHEEL VEHICLE STABILITY

Using the maximum height for the vehicle cg location shown in Figure 3-2, the coordinates are:

$$X = 68 \text{ in}, \quad Y = 46 \text{ in.}$$

using the equation given in Section 8-1 the maximum vehicle tipping angle is;

$$\theta_{1o} = \tan^{-1} 1.48 = 55.9^{\circ}$$

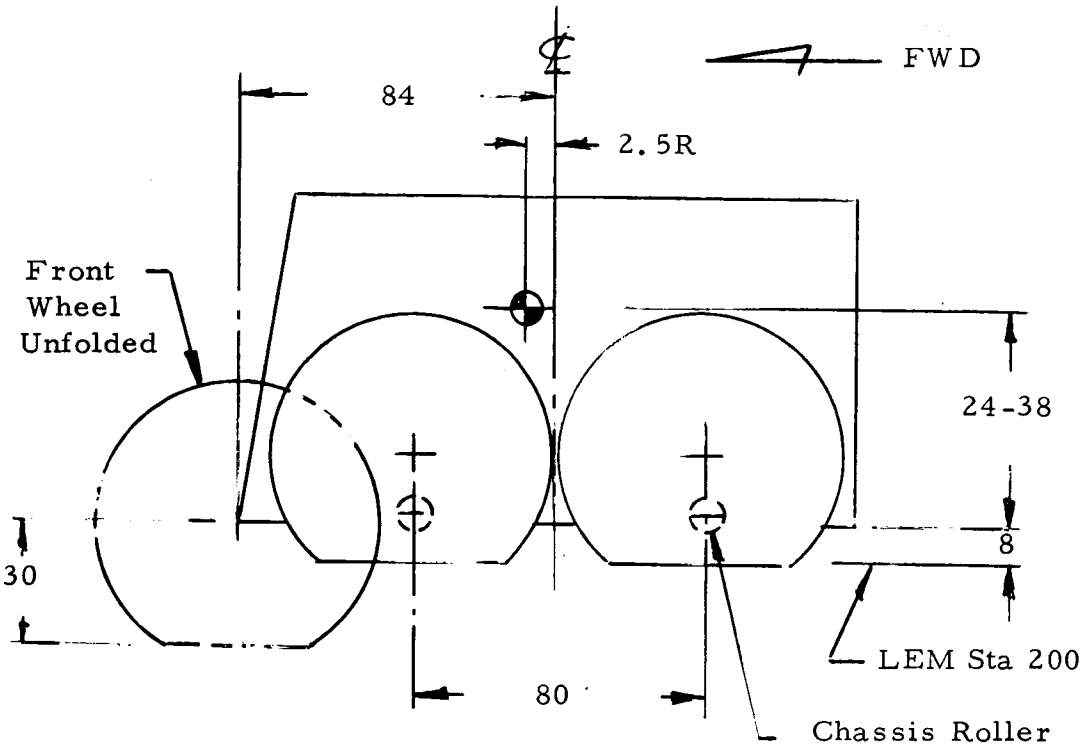


SIDE VIEW

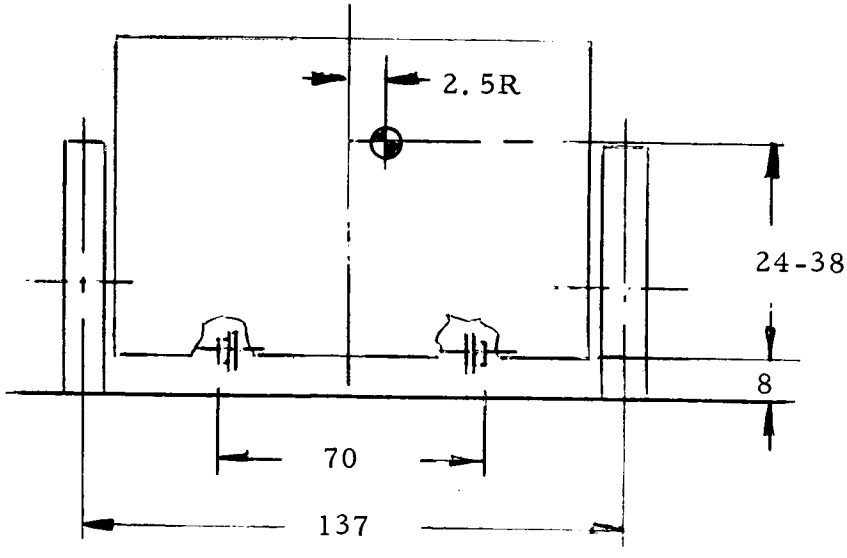


FRONT VIEW

FOUR WHEEL VEHICLE GEOMETRY
FOR PITCH AND ROLL STABILITY STUDY

FIGURE 10-1

When the vehicle is rotated through this angle, tipping instability is imminent. $\theta_{1o}$ is the longitudinal marginal stability of the vehicle with reference to the forward wheels, i.e., when moving in a forward direction longitudinal instability will occur (ignoring inertia) when the slope being traversed is greater than 55.9°.

The vehicle lateral tipping angle for X = 55 in., Y = 46 in., is;

$$\theta_{LA_T} = \tan^{-1} \quad 1.2 = 50^{\circ}$$

$\theta_{LA_T}$ is referred to the vehicle wheels.

In reference to chassis wheels used for unloading, the lateral stability angle is reduced as follows.

$$X = 20, \quad Y = 32$$

$$\theta_{LA_C} = \tan^{-1} .55 = 29^{\circ}$$

The two lateral stability angles given indicate that for the combined LEM/T lunar surface slope of 18°, lateral stability is not critical.

## 10.2 LEM/T STABILITY

The parameters for evaluating the LEM/T stability are given in Section 8.2. Several conditions of LEM/T stability were analyzed for MOLAB boom unloading and the results obtained indicate that this method of unloading is not practicable. The analyses are presented below for lateral unloading of the four wheel vehicle. The LEM/T and vehicle dimensions are taken directly from Figures 7-2, 3-1, and 3-2.

- Boom Unloading on Level Lunar Surface Directly over Attitude Control Engines

$$X = \frac{X_T F_T + X_V F_V}{F_T + F_V} = \frac{113(4920) - 95.0\ (6500 \times 1.3)}{4920 + 6500 \times 1.3}$$

$$= -18.5 \text{ inches}$$

- Boom Unloading on Level Lunar Surface Directly Over One Leg

$$X = \frac{160(4920) - 95\ (6500 \times 1.3)}{4920 + 6500 \times 1.3} = -1.2 \text{ inches}$$

The negative values for X indicate the lander will tip over (see Figure 8-1a) for the empty LEM/T weight of 4920 pounds and with a dynamic load factor of 1.3 for the MOLAB weight of 6500 pounds. The six wheel semiarticulated vehicle is only 145 inches wide at the radiators compared to 180 inches and, consequently is less critical (allows unloading on a $4^{o}$ lunar surface slope) for boom unloading than shown above. Boom unloading is still not practicable for the six wheel semiarticulated vehicle due to the expected $18^{o}$ inclinations of the cargo deck.

Use of wheel, or chassis tracks to unload a vehicle from the LEM/T considerably increases the combined LEM/T cargo deck-lunar surface slope on which a vehicle may be unloaded. Using the nomenclature and equations of Section 8-2 for,

$F_T$ = 4920 pounds $\qquad$ $F_V$ = 6500(1.3) = 8450 pounds

$X_T$ = 114 inches $\qquad$ $X_V$ = -6 inches

$Y_T$ = 73 inches $\qquad$ $Y_V$ = 123 inches

$$\overline{X} = \frac{114(4920)-6\,(8450)}{13370} = 38 \text{ inches}$$

$$\overline{Y} = \frac{73(4920)+123\,(8450)}{13370} = 104 \text{ inches}$$

from section 8-1

$$\theta = \tan^{-1} .365 = 20.0^{o}$$

The angle $\theta$ represents the allowable combined LEM/T cargo deck and lunar surface slope for the critical downhill unloading condition. The calculations above are for the 4-wheel vehicle. A corresponding computation for the 6-wheel semiarticulated vehicle resulted in an angle of $24^{o}$.

## 10.3 UNLOADING CLEARANCES FOR MOLAB

Based on geometric analyses, the unloading tracks used for the four wheel and the six wheel vehicles eliminate all clearance problems for the vehicles, with respect to LEM/T structure, when leaving the LEM/T. No vehicle clearance problems are expected as the MOLAB touches the lunar surface and drives off the track. The vehicle $90^{o}$ angle of approach and the 24 inch ground clearance permit clearing all anticipated protuberances.

## 10.4 UNLOADING TRACK LENGTHS

The lengths of the tracks used to unload the four wheel and six wheel semi articulated vehicle will be determined in this section.

The parameters for track length have been outlined in Section 8.3 and an equation established for calculating track length. The criteria for track length evaluation is shown in Figure 10-2. The LEM/T legs either rest on a 24 inch high rock or have vertical leg deflections from 0 to 25 inches. In Figure 10-2 two legs are shown resting on the rock at the crest of a $5^{\circ}$ hill and the other two legs are crushed 25 inches. The angle $\theta$ is measured from the track centerline to the horizontal and this angle may be compared to MOLAB pitch stability angles calculated in Section 10.1. **Track lengths may then be established by selecting a track angle which is less than the minimum pitching angle expected for MOLAB.**

### 10.4.1 UNLOADING TRACK LENGTH FOR THE FOUR WHEEL VEHICLE

The unloading track length required for the four wheel vehicle may be established from Figures 10-3 and 10-4. The LEM/T is shown in Figure 10-3 with two legs resting on a 24 inch rock at the crest of a $5^{\circ}$ hill and the other two legs crushed 25 inches. A second case is illustrated in Figure 10-4 wherein one leg is resting on a 24 inch rock and the leg $180^{\circ}$ apart is crushed 25 inches. Track lengths are given in both cases for a track pivot point located 6 inches above the LEM/T deck and 120 inches from the vertical centerline of the LEM/T. The track lengths shown vary with a change in the angle measured from the horizontal to the track centerline. The critical or longest track length is obtained from Figure 10-3 wherein two lander legs are resting on the 24 inch rock. The critical pitching angle for the chassis track unloading was calculated to be $46.2^{\circ}$ in Section 10.1.1. A 240 inch unloading track length was selected for the four wheel vehicle resulting in a track angle of approximately $45^{\circ}$. Additional pitch stability will be provided by the cable used to brake the descent of the four wheel vehicle.

### 10.4.2 TRACK LENGTH FOR SIX WHEEL VEHICLE

The track length requirements can be obtained from the data in Figure 8-3. The track length will be based on a lunar slope of $5^{\circ}$, LEM/T deck inclination of $13^{\circ}$, and D being the distance from the LEM/T leg contact point to the track pivot point, i.e., the break in the lunar surface slope occurs at the LEM/T.

The maximum vehicle longitudinal tipping angle was found to be $55.9^{\circ}$ ignoring the effects of dynamic inertia forces. To account for this dynamic effect the maximum track angle with the horizontal will be assumed to be $45^{\circ}$.

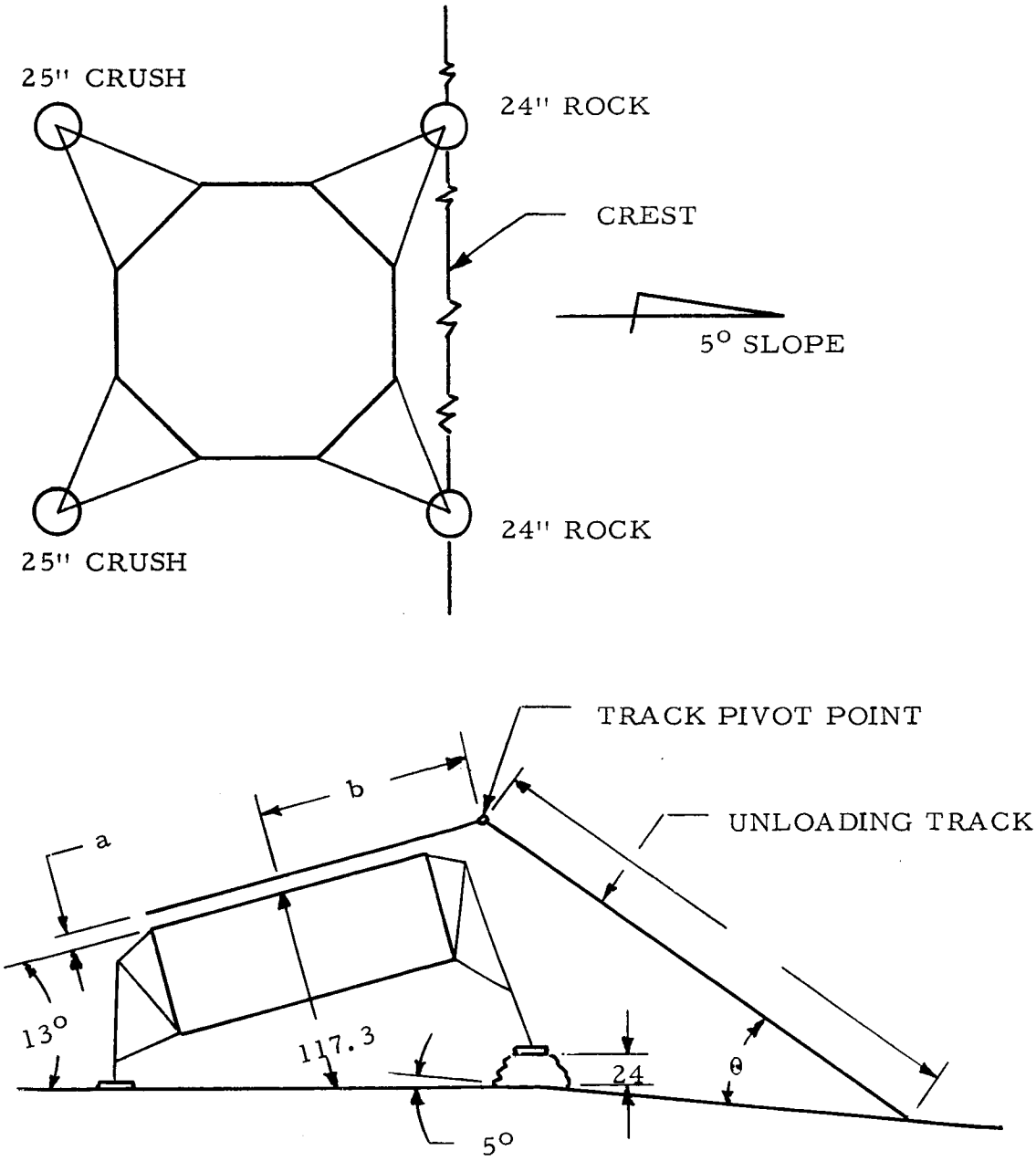


CRITERIA FOR
UNLOADING TRACK LENGTH

FIGURE 10-2

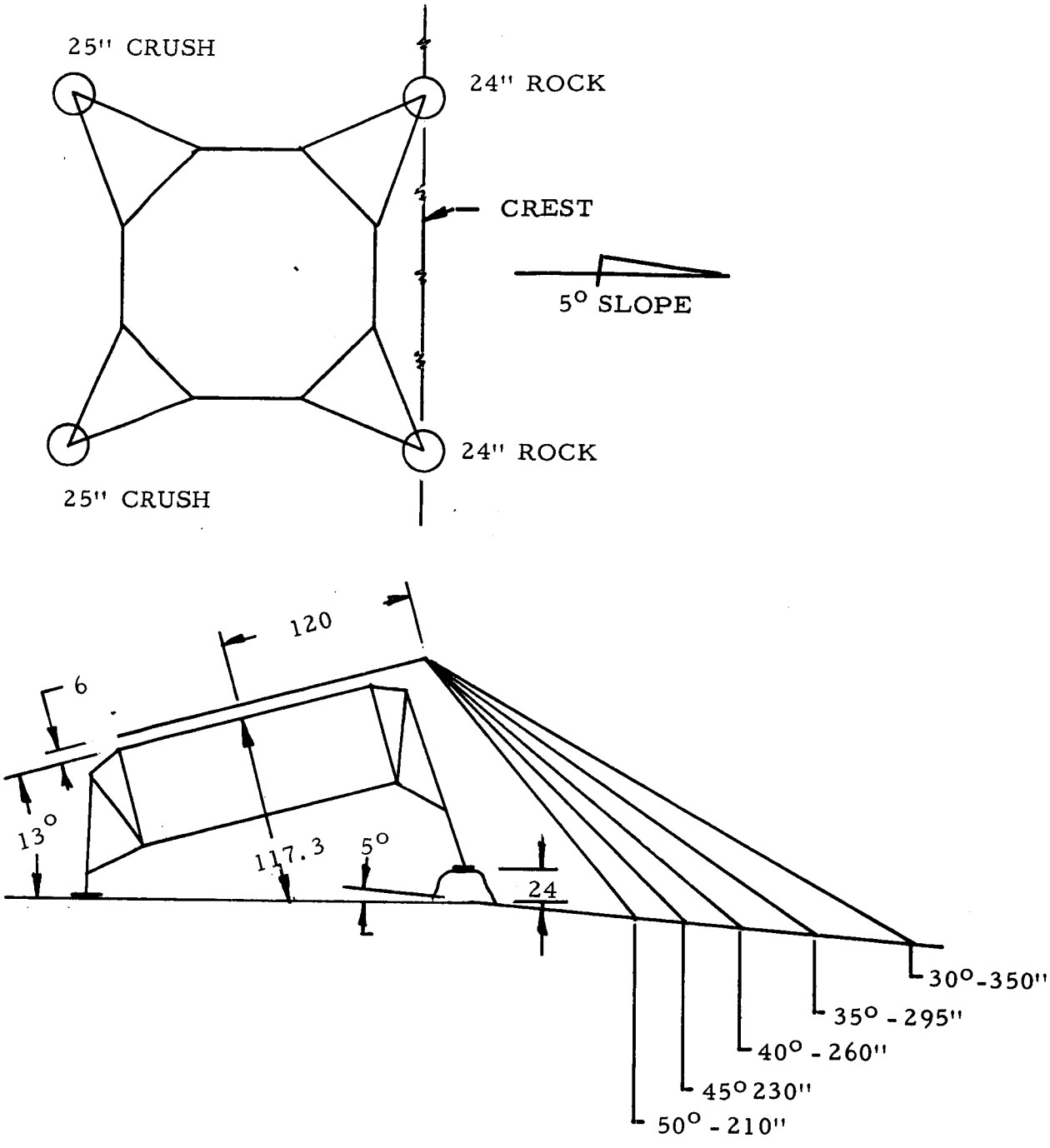


NOTE: Angles shown above are measured from the Track Centerline and the Horizontal

TRACK LENGTHS CASE I

FIGURE 10-3

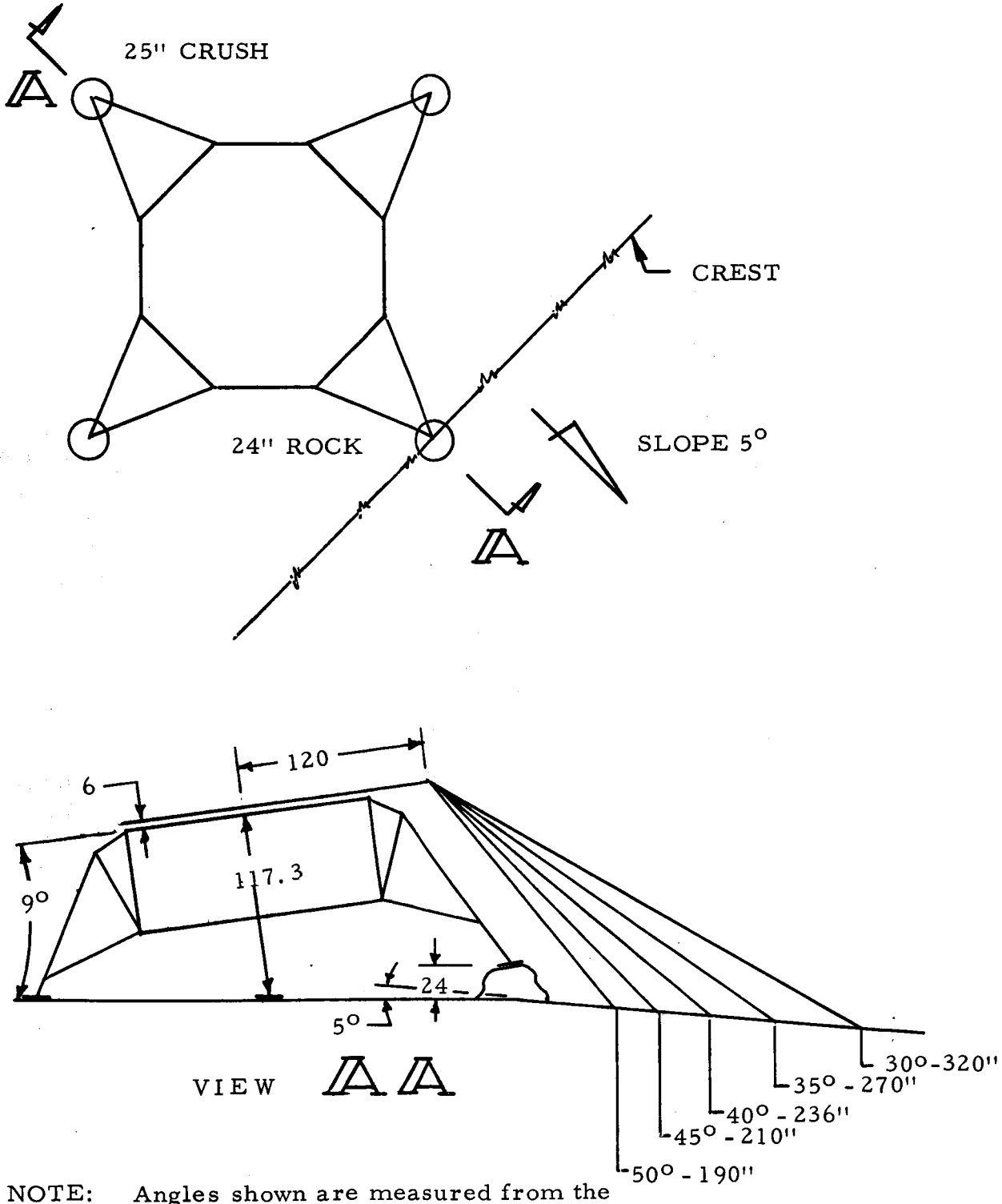


NOTE: Angles shown are measured from the Track Centerline and the Horizontal.

TRACK LENGTHS CASE II
FIGURE 10-4

when $\lambda = 45^{\circ}$, $\beta = 5^{\circ}$, D=31 in.,
$\gamma = 13^{\circ}$, A = 100 in h = 117

The wheel track length required is;

$$L_W = 212 \text{ inch}$$

when $\lambda = 45^{\circ}, \beta = 5^{\circ}$, D=31 in.
$\gamma = 13^{\circ}$, A = 100 in., h=132 in.

The chassis track length is

$$L_C = 231 \text{ in.}$$

## 10.5 WEIGHT OF UNLOADING & TIEDOWN EQUIPMENT

The unloading and tiedown equipment described in Section 9.0 was analyzed and weights were calculated for the major components of the unloading system. Weights are provided in this Section for the four wheel and the six wheel semiarticulated vehicle. Loads and strength analyses for the major structural components are included in the Technical Appendix of this report.

### 10.5.1 UNLOADING AND TIEDOWN EQUIPMENT WEIGHT FOR THE FOUR WHEEL VEHICLE

The weights calculated for the unloading and tiedown equipment associated with the four wheel vehicle are shown in Tables 10-2 through 10-6. A summary of all the weight analyses is furnished in Table 10-1 for the detailed weight breakdowns tabulated in Tables 10-2 through 10 6. No detailed weight breakdown is provided for unloading system 4C-1 inasmuch as the detailed weights are the same as shown for the 4D-1 unloading system. It is evident that the 4D-1 system would be preferred to the 4C-1 system because the greater azimuth capability associated with the 360° turntable rotation.

The choice between the 4A-1, 4B-1 and 4D-1 systems will depend upon a tradeoff study wherein the increased azimuth capability and resulting increased weight must be compared with the weight penalties associated with the advantages and disadvantages of other MOLAB subsystem design features.

TABLE 10-1

WEIGHT SUMMARY FOR UNLOADING & TIEDOWN EQUIPMENT - FOUR WHEEL VEHICLE

| Identification Number | Description | Weight (Pounds) |
|---|---|---|
| 4D-1 | Full 360° Azimuth Capability (Rollers on Fixed Ring) | 403 |
| 4D-2 | Full 360° Azimuth Capability (Integral Bearing) | 438 |
| 4C-1 | 0° - ± 45° Azimuth Capability (Rollers on Fixed Ring) | 403 |
| 4B-1 | Two Direction Unloading - Overhead Tracks | 308 |
| 4B-2 | Two Direction Unloading (0° - 180°) Folding Tracks | 373 |
| 4A-1 | Single Direction Unloading - Overhead Tracks | 256 |
| 4A-2 | Single Direction Unloading - Folding Tracks | 256 |

TABLE 10-2

WEIGHT TABULATION FOR
4D-1 VEHICLE UNLOADING & TIEDOWN
EQUIPMENT - 360° AZIMUTH CAPABILITY
(8 Rollers)

| Item | | Weight (Pounds) |
|---|---|---|
| TURNTABLE EQUIPMENT | | 147 |
| Fixed Ring (Incl. Ring Gear) | 55 | |
| Rollers and Hangers (4) | 20 | |
| Pivot Beams (2) | 52 | |
| Pivot Beam Cross Members (2) | 10 | |
| Flexible Cable & Gear Assembly | 10 | |
| UNLOADING EQUIPMENT | | 176 |
| Tracks (2) | 85 | |
| Track Cross Members | 40 | |
| Winches and Cable | 20 | |
| Braking Mechanism | 15 | |
| Chassis Rollers | 16 | |
| TIEDOWN EQUIPMENT | | 30 |
| Chassis Support Struts | 30 | |
| ELECTRONIC EQUIPMENT | | 35 |
| Unloading programmers, squibs, batteries and umbilical cable | 35 | |
| MANUAL PROVISIONS | | 15 |
| TOTAL | | 403 |

Note: See Figure 9-3 for details on equipment tabulated above.

TABLE 10-3

WEIGHT TABULATION FOR
4D-2 VEHICLE UNLOADING & TIEDOWN
EQUIPMENT - 360° AZIMUTH CAPABILITY
(Integral Turntable Bearing)

| Item | Weight (Pounds) | |
|---|---|---|
| TURNTABLE EQUIPMENT | | 182 |
| Integral Bearing and Housing | 120 | |
| Pivot Beams (2) | 52 | |
| Flexible Cable & Gear Assembly | 10 | |
| UNLOADING EQUIPMENT | | 176 |
| Tracks (2) | 85 | |
| Track Cross Members | 40 | |
| Winches and Cable | 20 | |
| Braking Mechanism | 15 | |
| Chassis Rollers | 16 | |
| TIEDOWN EQUIPMENT | | 30 |
| Chassis Support Struts | 30 | |
| ELECTRONIC EQUIPMENT | | 35 |
| Unloading programmers, squibs, batteries and umbilical cable | 35 | |
| MANUAL PROVISIONS | | 15 |
| TOTAL | | 438 |

Note: See Figure 9-3 for details on equipment tabulated above.

TABLE 10-4

UNLOADING AND TIEDOWN EQUIPMENT
WEIGHT TABULATIONS FOR 4B-1 VEHICLE UNLOADING SYSTEM
(Two Directions - Overhead Tracks)

| Item | Weight (Pounds) | |
|---|---|---|
| UNLOADING EQUIPMENT | | 238 |
| Tracks (2) | 114 | |
| Track Cross Members | 48 | |
| Winches and Cables | 35 | |
| Braking Mechanism | 15 | |
| Chassis Rollers | 16 | |
| TIEDOWN EQUIPMENT | | 30 |
| Chassis Support Struts | 30 | |
| ELECTRONIC EQUIPMENT | | 35 |
| Unloading Programmers, Squibs, batteries and umbilical cable | 35 | |
| MANUAL PROVISIONS | | 15 |
| TOTAL | | 308 |

Note: See Figure 9-1 for details on equipment tabulated above.

TABLE 10-5

UNLOADING AND TIEDOWN EQUIPMENT
WEIGHT TABULATIONS FOR 4B-2 VEHICLE UNLOADING SYSTEM
(Two Directions - Folding Tracks)

| Item | | Weight (Pounds) |
|---|---|---|
| UNLOADING EQUIPMENT | | 291 |
| Tracks (2) | 148 | |
| Track Cross Members | 72 | |
| Winches and Cables | 40 | |
| Braking Mechanism | 15 | |
| Chassis Rollers | 16 | |
| TIEDOWN EQUIPMENT | | 30 |
| Chassis Support Struts | 30 | |
| ELECTRONIC EQUIPMENT | | 35 |
| Unloading Programmers, squibs, batteries and umbilical cable | 35 | |
| MANUAL PROVISIONS | | 15 |
| TOTAL | | 373 |

Note: See Figure 9-2 for details on equipment tabulated above.

TABLE 10-6

WEIGHT TABULATION FOR
4A-1 and 4A-2 VEHICLE UNLOADING & TIEDOWN
EQUIPMENT - SINGLE DIRECTION UNLOADING

| Item | Weight (Pounds) | |
|---|---|---|
| **UNLOADING EQUIPMENT** | | 176 |
| Tracks (2) | 85 | |
| Track Cross Members | 40 | |
| Winches and Cable | 20 | |
| Braking Mechanism | 15 | |
| Chassis Rollers | 16 | |
| TIEDOWN EQUIPMENT | | 30 |
| Chassis Support Struts | 30 | |
| ELECTRONIC EQUIPMENT | | 35 |
| Unloading programmers, squibs, batteries and umbilical cable | 35 | |
| MANUAL PROVISIONS | | 15 |
| TOTAL | | 256 |

Note: See Figure 9-1 for details on equipment tabulated above.

## 10.5.2 UNLOADING AND TIEDOWN EQUIPMENT WEIGHT FOR THE SIX WHEEL VEHICLE.

The overall weight of each of the tiedown and unloading systems presented for the six wheel vehicle are listed in Table 10-7. A detailed component weight listing is shown for each of the systems in Tables 10-8 through 10-13.

The preferred systems 6D-1, 6B-1, and 6A-1 offer a definite weight saving compared to the alternate systems 6D-2, 6B-2, and 6A-2. Although the primary criterion for selecting the preferred systems, as opposed to the alternate systems was weight, other qualitative factors were considered.

The alternate 0-360$^{\circ}$ wheel track system in addition to being considerably heavier, requires seven remotely controlled events, compared to six for the chassis track system, in order to unload the vehicle. This systems reliability would, therefore, appear to be less than that of the preferred system.

The two directional chassis track preferred system is approximately 11% lighter than the alternate system, but system reliability appears to be less due to the track deployment method. This is also true for the single direction preferred system.

Although a rigorous attempt toward system optimization was not made, the unloading systems presented are considered to give a reasonable indication of the weight penalty to be attributed to this aspect of the AES mission.

TABLE 10-7

WEIGHT SUMMARY FOR UNLOADING AND TIEDOWN EQUIPMENT - 6 Wheel Vehicle

| Identification Number | System Description | Weight (Pounds) |
|---|---|---|
| 6D-1 | $360^{\circ}$ unloading - chassis tracks | 379 |
| 6D-2 | $360^{\circ}$ unloading - wheel tracks | 537 |
| 6C-1 | $\pm 45^{\circ}$ unloading - chassis tracks | 379 |
| 6C-2 | $\pm 45^{\circ}$ unloading - wheel tracks | 537 |
| 6B-1 | Two Direction unloading - chassis tracks | 260 |
| 6B-2 | Two Direction unloading - wheel tracks | 287 |
| 6A-1 | Single Direction unloading - chassis tracks | 247 |
| 6A-2 | Single Direction unloading - wheel tracks | 277 |

TABLE 10-8

WEIGHT TABULATION FOR 6D-1
UNLOADING AND TIEDOWN EQUIPMENT - 360°
AZIMUTH
(CHASSIS TRACKS)

| Item | Weight (Pounds) |
|---|---|
| HUB ASSEMBLY EQUIPMENT | |
| Spokes | 25 |
| Pivot Beams | 76 |
| Cross Beams | 29 |
| Bearing | 40 |
| Gear | 10 |
| Torque Motor and Gear | 15 |
| UNLOADING EQUIPMENT | |
| Tracks | 66 |
| Chassis Wheels | 25 |
| Track Drive Motors and Gear | 18 |
| TIEDOWN EQUIPMENT | |
| Chassis Support Struts and Cable | 25 |
| ELECTRONIC EQUIPMENT | |
| Unloading programmers, squibs, batteries and umbilical Cable | 35 |
| MANUAL PROVISIONS | 15 |
| TOTAL | 379 |

TABLE 10-9

WEIGHT TABULATION FOR 6D-2 UNLOADING AND TIEDOWN EQUIPMENT - 360° AZIMUTH (WHEEL TRACKS)

| Item | Weight (Pounds) |
|---|---|
| **TURN TABLE EQUIPMENT** | |
| Fixed Ring | 146 |
| Track Housing | 65 |
| Torque Motors | 30 |
| UNLOADING EQUIPMENT | |
| Tracks | 191 |
| Track Drive Motors | 30 |
| TIEDOWN EQUIPMENT | |
| Chassis Struts and Cables | 25 |
| ELECTRONIC EQUIPMENT | |
| Unloading programmers, squibs batteries and umbilical cable | 35 |
| MANUAL PROVISIONS | 15 |
| TOTAL | 537 |

TABLE 10-10

WEIGHT TABULATION FOR 6B-1 UNLOADING AND TIEDOWN EQUIPMENT - TWO DIRECTION (CHASSIS TRACKS)

| Item | Weight (Pounds) |
|---|---|
| UNLOADING EQUIPMENT | |
| Tracks | 66 |
| Pivot Beams and Support | 64 |
| Track drive motors | 30 |
| Chassis Wheels | 25 |
| TIEDOWN EQUIPMENT | |
| Chassis Struts and Cable Wheel Supports | 25 |
| ELECTRONIC EQUIPMENT | |
| Unloading programmers, squibs, batteries, and umbilical cable | 35 |
| MANUAL PROVISIONS | 15 |
| TOTAL | 260 |

TABLE 10-11

WEIGHT TABULATION FOR 6B-2 UNLOADING AND TIEDOWN EQUIPMENT - TWO DIRECTION (WHEEL TRACKS)

| Item | Weight (Pounds) |
|---|---|
| UNLOADING EQUIPMENT | |
| Tracks | 118 |
| Track Housing | 54 |
| Torque Motors | 10 |
| Track Drive Motors | 30 |
| TIEDOWN STRUCTURE | |
| Chassis struts and cables | 25 |
| ELECTRONIC EQUIPMENT | |
| Unloading programmers, squibs, batteries and umbilical cables | 35 |
| MANUAL PROVISIONS | 15 |
| TOTAL | 287 |

TABLE 10-12

WEIGHT TABULATION FOR 6A-1 UNLOADING AND TIEDOWN EQUIPMENT - ONE DIRECTION (CHASSIS TRACKS)

| Item | Weight (Pounds) |
|---|---|
| UNLOADING EQUIPMENT | |
| Tracks | 66 |
| Pivot beams and support | 70 |
| Track Drive Motors and Cable | 11 |
| Chassis Wheels | 25 |
| TIEDOWN EQUIPMENT | |
| Chassis struts and cable | 25 |
| ELECTRONIC EQUIPMENT | |
| Unloading programmers, squibs batteries, and umbilical cable | 35 |
| MANUAL PROVISIONS | 15 |
| TOTAL | 247 |

TABLE 10-13

WEIGHT TABULATION FOR 6A-2 UNLOADING AND TIEDOWN EQUIPMENT - ONE DIRECTION (WHEEL TRACKS)

| Item | Weight (Pounds) |
|---|---|
| UNLOADING EQUIPMENT | |
| Tracks | 118 |
| Track housing | 54 |
| Track drive motors | 20 |
| Torque motors | 10 |
| TIEDOWN EQUIPMENT | |
| Chassis struts and cable | 25 |
| ELECTRONIC EQUIPMENT | |
| Unloading programmers, squibs, batteries and umbilical cable | 35 |
| MANUAL PROVISIONS | 15 |
| TOTAL | 277 |

## 11.0 CONCLUSIONS

The track unloading systems developed in this study for the four and six wheel vehicles are capable of accomplishing the unloading operation, after lunar landing, in accordance with the mission requirements.

Other conclusions resulting from the unloading and tiedown study are:

- The weight of the $360^{\circ}$ multiazimuth unloading system for the four wheel vehicle is 403 pounds. The one and two direction unloading system weights are 256 and 308 pounds respectively.

- The weight of the $360^{\circ}$ multiazimuth unloading system for the six wheel vehicle using wheel tracks is 537 pounds. The corresponding chassis track system weight is 379 pounds. The two directional wheel track and chassis track system weight is 277 pounds, and the chassis track unloading system weight is 247 pounds.

- The study revealed no significant weight savings for the $0^{\circ}$ to $\pm 45^{\circ}$ azimuth unloading systems when compared to the more versatile $360^{\circ}$, or full azimuth systems.

- A boom system mounted on the LEM/T should not be used for unloading MOLAB. The LEM/T exhibits negative stability margins when boom unloading either the 4-wheel vehicle on a level surface, or the 6-wheel semiarticulated vehicle on a $5^{\circ}$ lunar surface slope.

- Unloading tracks, which pivot about a point outboard of the LEM/T structure, allow clearing the attitude control engines and the LEM/T legs during the MOLAB unloading operation from the LEM/T.

- No unloading track-lunar surface clearance problems are expected with either the 4 wheel or the 6 wheel vehicle during track unloading. The basic vehicle configuration and the 24 inch ground clearance eliminates all postulated vehicle ground clearance problems.

- The use of numerous explosive devices is required to achieve the remotely controlled MOLAB unloading. In order to increase the reliability of the entire unloading system the use of parallel or redundant explosive devices appears mandatory.

- In the event the remote unloading mode fails, manual operation of the unloading equipment may be achieved throught the use of light weight hand tools (jacks, cranks, etc.).

## 12.0 RECOMMENDATIONS

As a result of this study the following recommendations are made:

- Track unloading systems, used to unload MOLAB from the LEM/T, should provide a continuous bridge from the LEM/T deck to the lunar surface. Such systems provide stable unloading conditions throughout the unloading cycle. The lunar surface support of the track free end reduces the otherwise critical overturning moments encountered during unloading.

- Investigations should be conducted to determine to what extent, if any, the LEM/T design may be modified, before or after lunar landing, in order to enhance the unloading system capability. Examples of such modifications are: explosive removal of attitude control nozzles or, reduction of LEM/T deck height, integrating the meteoroid and thermal shielding in some areas with tiedown or unloading structure, etc. Such modification offers the potential of reduced unloading system weight and increased system reliability.

- Winches used for the unloading operation should be installed on MOLAB. The winch will then be available for use on the vehicle during the mission operational phase.

## 13.0 REFERENCES


1. Formulas for Stress and Strain, R. J. Roark, 3rd Edition, McGraw-Hill Book Company, Inc., New York, New York.

2. ALSS Payloads, Concept Selections, ALSS-TR-005, 3 September 1964, The Bendix Corporation, Bendix Systems Division, Ann Arbor, Michigan.

3. Apollo Logistics Support System (ALSS) Payloads, Interim Report D2-36072-1, September 1964, The Boeing Company, Aerospace Division, Seattle, Washington.

4. Task Report on Tiedown and Unloading Systems Studies, Section 4, ALSS MOLAB Studies, NASA, MSFC, TMX-53032.4, J. E. Ligocki and J. Atkinson, dated March 1964.

5. Miscellaneous Guidelines and Criteria for Use in ALSS Studies, R-P & VE-AB-64-55, NASA, MSFC, Memorandum From J. C. Rains, R-P & VE-AB, To Schaefer, R-AERO-SP, July 20, 1964.

6. Design and Analysis of Tiedown, Deployment and Leveling Systems for ALSS Payloads, Task Order N-39, Contract NAS 8-11096, NASA, MSFC, August 28, 1964.

7. Design Criteria For ALSS Payloads, Preliminary, NASA, MSFC.

8. Frame Rigidity-How Much and Where, Richard L. Exler, SAE769B, October 1963.

# APPENDIX A - GENERAL DISCUSSION

## A.1 ALLOWABLE STRESSES FOR 2219-T87 ALUMINUM ALLOY

The material selected for the primary structural members of the unloading and tiedown equipment was 2219 T87 aluminum alloy. This alloy is used for the Saturn V first stage and for the LEM primary structural members. The alloy has excellent welding and machining properties and has adequate strength for use in the temperature range of -250°F to + 250°F.

The room temperature minimum allowable stresses for 2219 T87 alloy are:

$F_{ty}$ = 50,000 psi tensile yield

$F_{tu}$ = 63,000 psi tensile ultimate

At elevated temperatures a reduction in room temperature properties will occur. Data from Aluminum Company of America (Alcoa) and from Reynolds Metals Company indicates the strength at +250°F is approximately 85% of the room temperature properties. This applies to both the tensile yield and ultimate strengths. The allowable stresses at +250°F are:

$F'_{ty}$ = 50,000 x .85 = 42,500 psi

$F'_{tu}$ = 63,000 x .85 = 53,500 psi

The factors of safety used in this study were 1.1 on yield strength and 1.4 on ultimate strength. Applying these factors of safety to the elevated temperature allowables:

$F''_{ty}$ = 42,500/1.1 = 38,600 psi tensile yield

$F''_{tu}$ = 53,500/1.4 = 38,200 psi tensile ultimate

It is apparent then that ultimate strength values will control the design of the structural members. The ultimate tensile stress value of 53,500 psi was used in the reported stress analyses. The limit load values were multiplied by 1.4, the ultimate load factor of safety, to obtain the maximum ultimate load values.

In addition to allowable tensile stresses, allowable crippling stresses and column stresses were used in the analyses of the various primary structural members.

The crippling stress indicates the compressive stress level at which local instability will occur. The entire member cross section, or a portion thereof, may become unstable when the critical crippling level is attained. The critical crippling stress is a function of end fixity, length, thickness and tangent modulus. In equation form the critical crippling stress is; $F_{cc} = KE_t(t/b)^2$.

This equation is not applicable to circular cross sections.

Data on the stress-strain and tangent modulus curves of 2219-T87 aluminum alloy was not available. To obtain approximate values for the critical crippling stress, the tangent modulus curve for 2024-T4 aluminum alloy given in MIL-HDBK-5, March 1961, was used. The results are shown in Figure A-1.

The allowable short column stress used is given by Reynolds Metals Company "Structural Aluminum Design Handbook", 1964 and is;

$$F_c = 62,100 - 506 \frac{KL}{r}$$

where

K = column end fixity constant

L = column length

r = cross section radius of gyration

To reflect the 15% reduction experienced for the allowable tensile stresses at elevated temperature, the above equation was modified as shown below

$$F_c = 62,100\,(.85) - 506 \frac{KL}{r}$$

$$= 52,800 - 506 \frac{KL}{r}$$

For long columns the Euler column equation was used.

## A.2 LOADS ANALYSIS

The loading conditions for the unloading and tiedown system are specified in Section 5.3.1. The critical loads for the MOLAB tiedown system will occur at the time of the LEM/T landing on the lunar surface. The deceleration limit loadings expected at this time are 8 earth g's acting vertically and horizontally. The deceleration loads may act separately or in combination along each axis. The critical loadings for the unloading equipment will occur during the unloading operation.

The MOLAB earth weight (not including the unloading equipment) was assumed to be 6500 pounds. This weight produces a total ultimate load at the time of LEM/T landing equal to 6500 x 8 x 1.4 = 72,800 pounds. This load must be carried by the tiedown system used to secure MOLAB to the LEM/T. The 1.4 value used above is the ultimate factor of safety.

The MOLAB lunar weight equals 6500 divided by 6 or 1083 pounds. A factor of 1.3 was used for the unloading equipment structure to account for dynamic loadings during the unloading operation. With the use of the 1.4 ultimate factor of safety, the total MOLAB loading becomes, 1083 x 1.3 x 1.4 = 1972 pounds. This load must be carried by the unloading equipment during the unloading operation.

To determine the weight of each of the major components of the unloading systems, stress analyses were conducted and the components chosen on the basis of what was considered to be critical loadings. Calculations for the critical stresses, weight and margin of safety will be shown on the ensuing pages.

# APPENDIX B

## LOAD AND STRESS CALCULATIONS FOR THE FOUR WHEEL VEHICLE UNLOADING & TIEDOWN SYSTEMS

Analyses are presented in this section for the major structural components of the unloading and tiedown system for the four wheel vehicle. The critical loading conditions and the stress calculations for the critical loadings are included in this Appendix for the following items:

- MOLAB Tiedown Struts
- Stationary Ring
- Unloading Tracks
- Pivot Beams
- Pivot Beam Cross Members

NAME OF PART - MOLAB TIEDOWN STRUTS

LOADS ANALYSIS

Eight MOLAB tiedown struts are used in four pairs to secure the MOLAB to the LEM/T cross beams. The struts are also bolted to the vehicle chassis fittings at 4 common points. The results of the loads analysis are shown for a pair of tiedown struts in Figure B-1. The applied ultimate loads of 47,600 and 19,500 pounds were obtained by applying a limit load factor of 8 vertically and horizontally to the MOLAB vehicle. The resulting maximum strut loads were obtained by superposing the resulting vertical and horizontal loads. A truss analysis for the struts was performed to obtain the maximum compressive load of 46,200 pounds.

A short column stress analysis was required to size the cross section of the tubular struts.

NAME OF PART: MOLAB Tiedown Struts

CRITICAL LOADING CONDITION

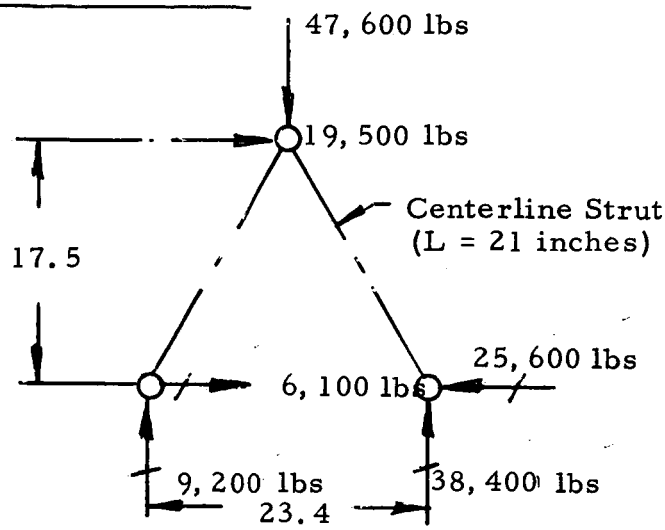


FIGURE B-1

SELECTED SECTION

Type: Circular Tube, 3.0 OD x 1/8 Wall, Weight = w = 1.366 lbs/ft
Section Modulus = Z = .779 $in^3$ Area = A = 1.129 $in^2$
Moment of Inertia = I = 1.169 $in^4$ Radius of Gyration = r = 1.017 in

STRESS ANALYSIS (Critical Stress)

Maximum Axial Load = $P_{max}$ = 46,200 lbs Compression

Axial Stress = $f_a = \frac{P}{A}$ = 41.0 ksi

Allowable Stress, $F_a = 52.8 - .506 \frac{KL}{r} = 52.8 - \frac{.506(21)}{1.129} = 43.3$ ksi

$$\text{Critical Margin of Safety} = \text{M.S.} = \frac{1}{\sqrt{\left(\frac{f_b}{F_b} + \frac{f_a}{F_a}\right)^2 + \left(\frac{f_s}{F_s}\right)^2}} - 1 = \frac{1}{41.0/43.3}$$

$$= .06$$

Name of Part - Stationary Ring

LOADS ANALYSIS

The stationary ring is 101.0 inches in diameter and is secured to the LEM/T cross beams. Four pairs of rollers, attached to the pivot beam, use the stationary ring as a circular track for turntable rotation of MOLAB. The critical loading for the stationary ring occurs when the MOLAB weight of 1972 pounds acts at the pivot point. This load is shared by the two pivot beams resulting in 986 pounds acting at the pivot end of the pivot beam. The reacting roller loads of 2231 and 1245 pounds are shown in Figure B-2.

A concentrated load analysis [1] was made for the stationary ring using the ultimate load of 2231 pounds. The ring was checked for midspan bending (ring supported at LEM/T cross beams) including secondary bending of the channel sectional due to torsional moments. The concentrated load was the most critical and the ring section was sized for this loading.

NAME OF PART: Stationary Ring

CRITICAL LOADING CONDITION

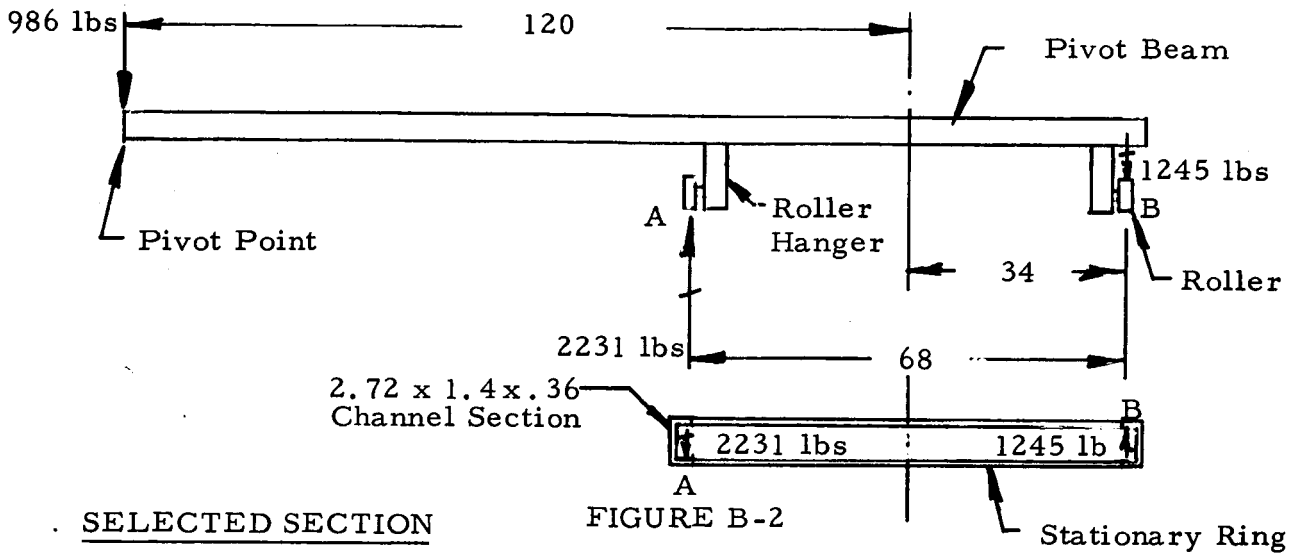


FIGURE B-2

SELECTED SECTION

Type - Ring - Channel Cross Section
Section Modulus = Z = 1.39 $in^3$
Moment of Inertia = I = 1.64 $in^4$

Weight = w = 2.08 lbs/ft
Area = A = 1.73 $in^2$
Radius of Gyration = r = .972 in

STRESS ANALYSIS (Critical Stress)

Maximum Roller Load = $P_{max}$ = 2231 lbs

Bending Stress = $f_b = \frac{3.05P}{t^2}$ = 52.5 ksi,

$$\text{Critical Margin of Safety} = \text{M.S.} = \frac{1}{\sqrt{\left(\frac{f_b}{F_b} \quad \frac{f_a}{F_a}\right) + \left(\frac{f_s}{F_s}\right)^2}} - 1 = \frac{1}{52.5/53.5} - 1$$

$$= .02$$

NAME OF PART - Unloading Tracks - 4 Wheel Vehicle

LOADS ANALYSIS

The chassis unloading tracks were analyzed using a moving load analysis to establish the maximum track moment as MOLAB moves down the tracks. The MOLAB weight of 1972 pounds (see Appendix A) was used to size the tracks. With two tracks and 4 chassis rollers the weight on each roller is, 1972/4 = 493 pounds. The maximum moment for the tracks occurs when the front wheels are 100 inches from the free end of the track (see Figure B-3). The track was assumed to be horizontal during the unloading process. This approach is conservative (approximately 8% increase in load) since the track will always be inclined from the horizontal unless the track free ends are actually resting on a hill of the precise height required to maintain a horizontal track position. This assumption does serve to eliminate long and tedious analyses to determine the most critical track attitude. No other track attitude analyzed, including nonuniform roller weight distribution, produced track loads higher than were realized with uniform roller loadings on horizontal tracks.

NAME OF PART: Unloading Tracks - Four Wheel Vehicle

CRITICAL LOADING CONDITION

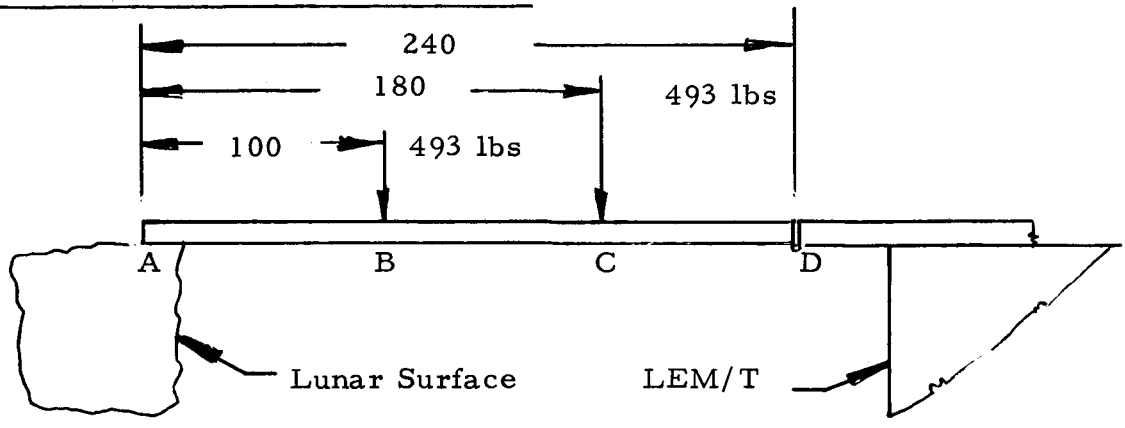


FIGURE B-3

SELECTED SECTION

Type - Rectangular Tube
Section Modulus = Z = .88 $in^3$
Moment of Inertia = I = 2.12 $in^4$

Weight = w = 1.24 lbs/ft
Area = A = 1.01 $in^2$
Radius of Gyration = r = 1.44 in

STRESS ANALYSIS (Critical Stress)

Maximum Moment = $M_{max}$ = 41,300 in-lbs @ B

Bending Stress = $f_b = \frac{M}{Z}$ = 47 Ksi

$$\text{Critical Margin of Safety} = \text{M.S.} = \frac{1}{\sqrt{\left(\frac{f_b}{F_b} + \frac{f_a}{F_a}\right)^2 + \left(\frac{f_s}{F_s}\right)^2}} - 1 = \frac{53,500}{47,000} - 1$$

$$= .14$$

NAME OF PART - Pivot Beam

LOADS ANALYSIS

The pivot point for the unloading tracks is secured to the LEM/T cross beams through the use of a pivot beam. The critical loading condition for the pivot beam occurs when the MOLAB weight of 1972 pounds (see Appendix A) acts at the pivot point. As shown in Figure B-4 the maximum ultimate moment will occur at point B.

NAME OF PART: Pivot Beam

CRITICAL LOADING CONDITION

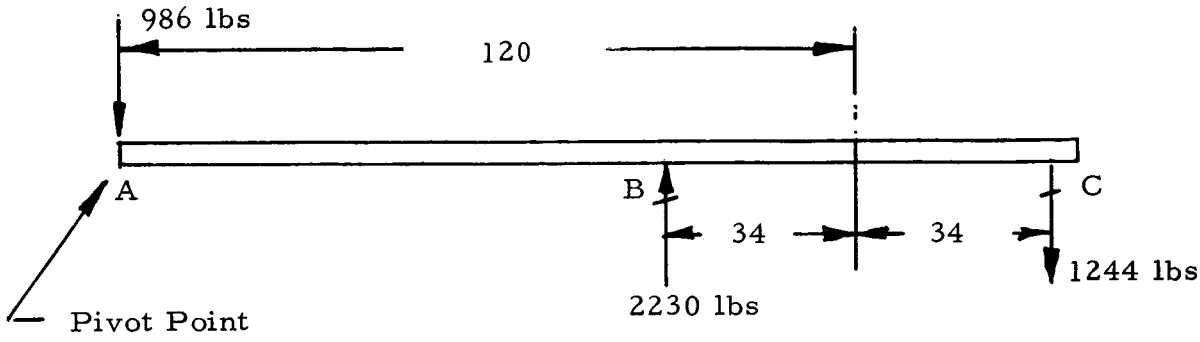


Note: Points B and C are turntable roller contact points with stationary ring.

FIGURE B-4

SELECTED SECTION

Type - Circular Tube, 4 1/4 OD, 1/8" wall, Weight = w = 1.960 lbs/ft
Section Modulus = Z = 1.623 $in^3$ Area = A = 1.620 $in^2$
Moment of Inertia = I = 3.449 $in^4$ Radius of Gyration = r = 1.459 in

STRESS ANALYSIS (Critical Stress)

Maximum Moment = $M_{max}$ = 84,900 in-lbs @ B

Bending Stress = $f_b = \frac{M}{Z}$ = 52.2 Ksi

$$\text{Critical Margin of Safety} = \text{M.S.} = \frac{1}{\sqrt{\left(\frac{f_b}{F_b}\ \frac{f_a}{F_a}\right)^2 \left(\frac{f_s}{F_s}\right)^2}} - 1 = \frac{1}{52.3/53.5} - 1$$

$$= .025$$

NAME OF PART: Pivot Beam Cross Member

LOADS ANALYSIS

The pivot beam cross members constrain the unloading tracks from twisting and separating during MOLAB unloading. The cross members are loaded in axial compression and bending as a result of the MOLAB cg offset (5.0 diameter) and the $18^{\circ}$ inclination of the cargo deck. The moment on each cross member is:

$$M = \frac{1972}{2} \times 45 \sin 18^{\circ} + 2.5 \times \frac{1972}{2} = 16,200 \text{ in-lbs.}$$

The axial compressive load on each cross member is

$$P = \frac{1972}{2} \sin 18^{\circ} = 305 \text{ lbs.}$$

The pivot beam assembly reacts with the lower flange of the stationary ring at points A and C. This flange is secured to (and reinforced by) the LEM/T cross beams. The pivot beam assembly also reacts with the upper flange of the stationary ring at points B and D. It is assumed in this analysis that the assembly is fixed at points A and C and free at points B and D as shown in Figure B-5.

The axial compression load required a column analysis and the long column formulas were indicated. Allowing for 15% reduction in strength at + 250°F, the allowable compressive stress, $F_a$ = 9.4 Ksi. The loads and stress analyses for the pivot beam cross members are shown in Figure B-5.

NAME OF PART: Pivot Beam Cross Member

CRITICAL LOADING CONDITION

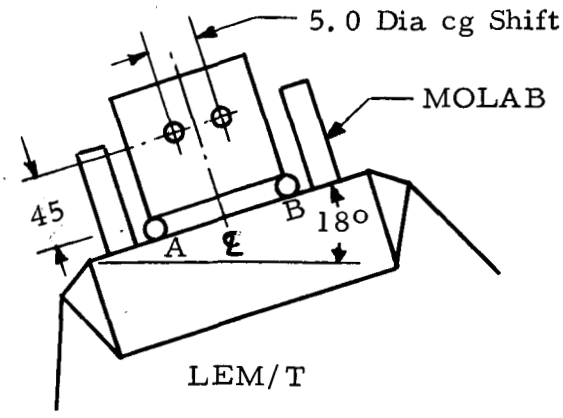


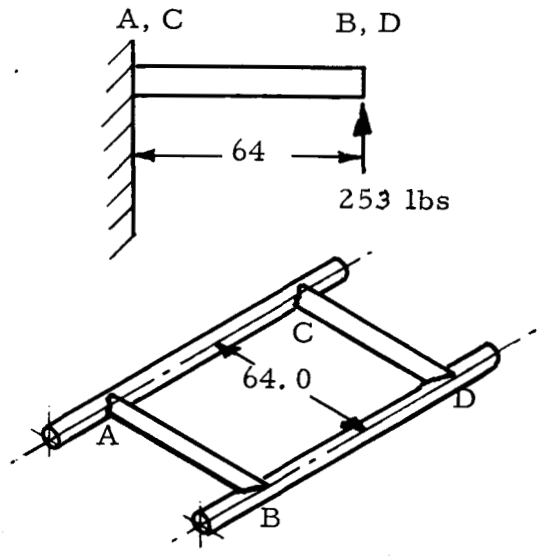


FIGURE B-5

SELECTED SECTION

Type - Circular Tube, 2.0 OD, 1/8" Wall
Section Modulus = Z = .325 $in^3$
Moment of Inertia = I = .325 $in^4$

Weight = w = .891 lbs/ft
Area = A = .736 $in^2$
Radius of Gyration = r = .664 in

STRESS ANALYSIS (Critical Stress)

Maximum Moment = $M_{max}$ = 16,200 in-lbs @ A, and C
Maximum Axial Load = $P_{max}$ = 305 lbs Compression

Bending Stress = $f_b = \frac{M}{Z}$ = 49.8 ksi, Axial Stress = $f_a = \frac{P}{A}$ = 413 lbs/$in^2$

$$\text{Critical Margin of Safety} = \text{M.S.} = \frac{1}{\sqrt{\left(\frac{f_b}{F_b} + \frac{f_a}{F_a}\right)^2 + \left(\frac{f_s}{F_s}\right)^2}} - 1 = \frac{1}{\sqrt{\left(\frac{49.8}{53.5} + \frac{413}{9400}\right)^2}} - 1$$

$$= .03$$

# APPENDIX C

## LOAD AND STRESS CALCULATIONS FOR THE SIX WHEEL VEHICLE UNLOADING SYSTEMS

This appendix presents the stress analysis of the primary structural elements used in the unloading systems developed for the six wheel semiarticulated vehicle.

The track critical loading (shown in Figure C-1) was determined from a moving loads analysis. This critical loading was considered to occur when the LEM/T deck was inclined $13^{\circ}$ and the lunar surface had a $5^{\circ}$ upward slope. This condition resulted in the minimum angle between the track and a horizontal and hence, the maximum normal load component producing bending in the track.

The same loading condition shown in Figure C-1 was considered to be critical for the multiazimuth wheel track system.

The critical loading condition for the multiazimuth wheel track system positioning ring is shown in Figure C-3. The loading consists of four (4) loads applied by the track housing rollers and eight (8) reacting loads supplied by the LEM/T primary structure.

NAME OF PART: 1 and 2 Direction System Wheel Tracks

CRITICAL LOADING CONDITION

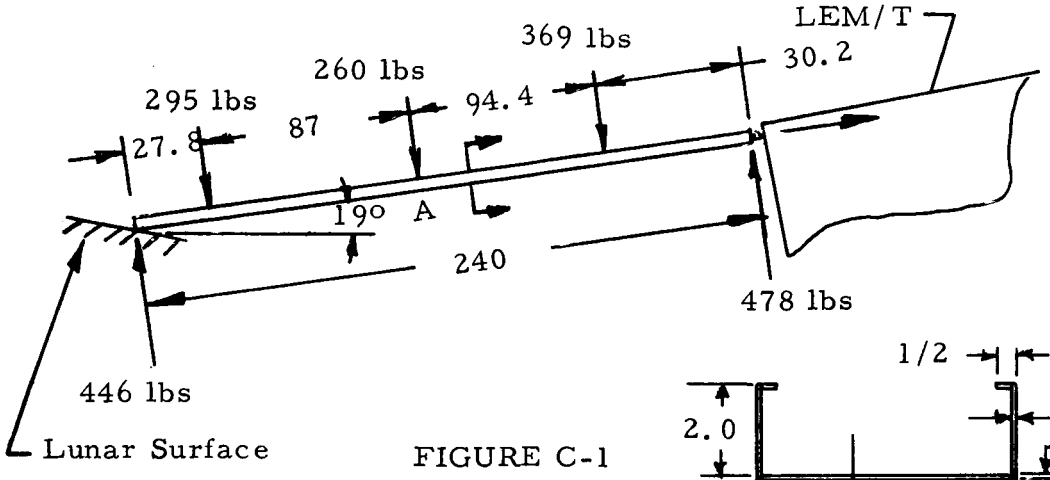


FIGURE C-1

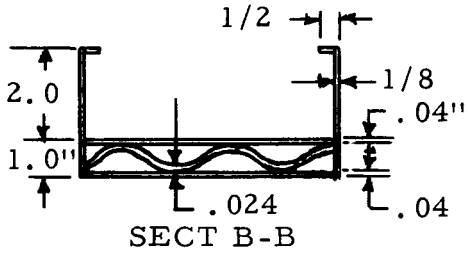


SELECTED SECTION

Type: Flanged Truss Core Plate
Section Modulus = Z = 1.00 $in^3$ Area = A = 2.385 $in^2$
Moment of Inertia = I = 2.05 $in^4$

STRESS ANALYSIS (Critical Stress)

Maximum Moment = $M_{max}$ = 38,500 in-lbs @ A
Maximum Shear Load = $V_{max}$ = 478 lbs

Bending Stress = $f_b = \frac{M}{Z}$ = 53,000 lbs/$in^2$

Shear Stress = $f_s \frac{VQ}{Ib}$ = 8700 lbs/$in^2$ Deflection @ A = 17 in

Allowable Crippling Stress = $F_{cc}$ = 42,600 lb/$in^2$

Critical Margin of Safety = M.S. = $\frac{1}{\sqrt{\left(\frac{f_b}{F_b}+\frac{f_a}{F_a}\right)^2+\left(\frac{f_{sT}}{F_s}\right)^2}} - 1 = .11$
(Axial Tension)

NAME OF PART: Multiazimuth System Wheel Tracks

CRITICAL LOADING CONDITION

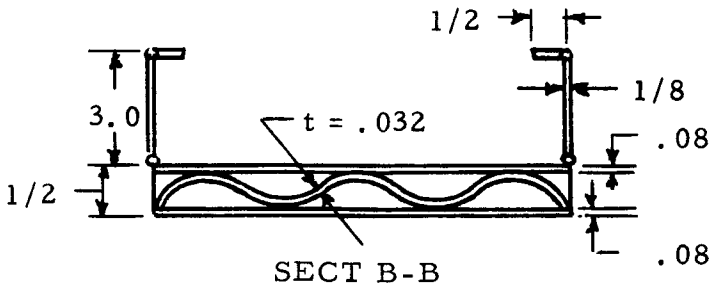


SECT B-B
FIGURE C-2

SELECTED SECTION

Type: Truss Core Sandwich Plate
Section Modulus = Z = 1.29 $in^3$
Moment of Inertia = I = 3.61 $in^4$

Weight = w = 4.79 lbs/ft
Area = A = 3.98 $in^2$

STRESS ANALYSIS (Critical Stress)

Maximum Moment = $M_{max}$ = 38,500 in-lbs
Maximum Shear Load = $V_{max}$ = 478 lbs

Bending Stress = $f_b = \frac{M}{Z}$ = 29,800 lb/$in^2$

Shear Stress = $f_s = \frac{VQ}{Ib}$ = 710 lbs/$in^2$ Deflection @ A = 10 in.

Allowable Crippling Stress = $F_{cc}$ = 38,600 lbs/$in^2$

Critical Margin of Safety = M.S. = $\frac{1}{\sqrt{\left(\frac{f_b}{F_b} + \frac{f_a}{F_a}\right)^2 + \left(\frac{f_s}{F_s}\right)^2}} = -1 = .29$

NAME OF PART: Multiazimuth Wheel Track Positioning Ring

CRITICAL LOADING CONDITION

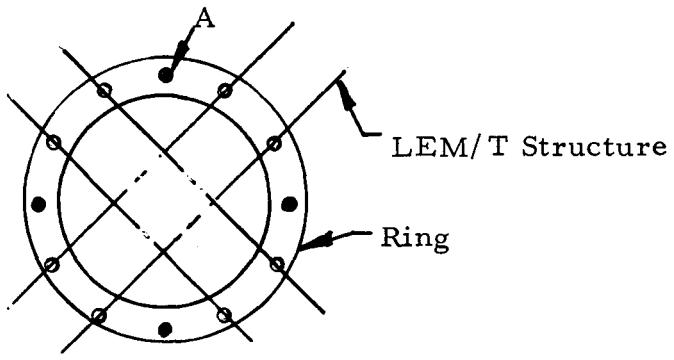


All loads are normal to the plane of the paper.
● - Applied Loads = 493 lbs
⊙ - Reacting Loads = 155 lbs

FIGURE C-3

SELECTED SECTION

Type: Flanged Channel
Section Modulus = Z = .717 $in^3$
Moment of Inertia = I = .368 $in^4$

Weight = w = 2.95 lbs/ft
Area = A = 2.423 $in^2$

STRESS ANALYSIS (Critical Stress)

Maximum Moment = $M_{max}$ = 36,571 in-lbs @ A
Maximum Shear Load = $V_{max}$ = 9391 lbs.
Maximum Twisting Moment = $T_{max}$ = 445 in/lbs

Bending Stress = $f_b = \frac{M}{Z}$ = 51,000 lbs/$in^2$

Shear Stress = $f_s = \frac{VQ}{Ib}$ = 19,900 lbs/$in^2$

Torsional Shear Stress = $f_s = \frac{T}{K} C$ = 3400 lbs/$in^2$

Critical Margin of Safety = M.S. $= \frac{1}{\sqrt{\left(\frac{f_b}{F_b} + \frac{f_a}{F_a}\right)^2 + \left(\frac{f_s}{F_s}\right)^2}} - 1 = .039$

The critical track loading for the multiazimuth one, and two direction chassis track systems was determined in the same manner as was used for the wheel track systems, i.e., by moving loads analysis. The track loading and margin of safety is the same for each of the chassis track systems. The critical loading condition is shown in Figure C-4.

The pivot beam critical loading condition for the multiazimuth system is shown in Figure C-5.

The critical loading on spoke member used in the hub assembly is shown in Figure C-6. These loads result from supporting the pivot beams from the spokes.

The critical loading for the hub assembly rotating shaft is shown in Figure C-7. These loads are transmitted to the shaft via the spoke members. The maximum moment was found to be the resultant of the moment vectors shown.

NAME OF PART: Multiazimuth, one and two Direction Chassis Tracks

CRITICAL LOADING CONDITION

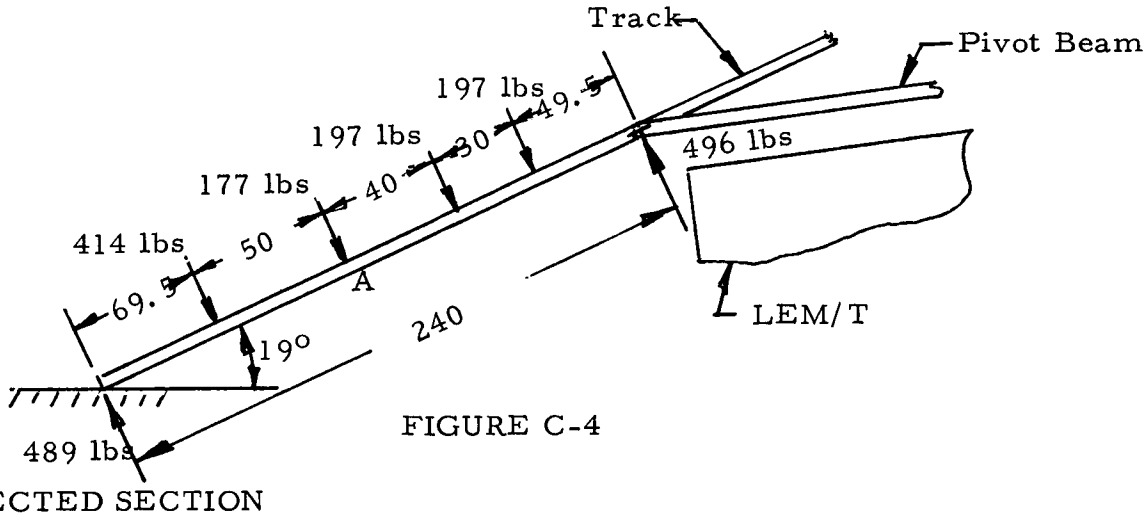


FIGURE C-4

SELECTED SECTION

Type: Channel
Section Modulus = Z = 1.34 $in^3$
Moment of Inertia = I = 2.48 $in^4$

Weight = w = 1.02 lbs/ft
Area = A = .84 $in^2$

STRESS ANALYSIS (Critical Stress)

Maximum Moment = $M_{max}$ = 41,400 in-lbs @ A
Maximum Shear Load = $V_{max}$ = 496 lbs

Bending Stress = $f_b = \frac{M}{Z}$ = 30,700 lbs/$in^2$,

Shear Stress = $f_s \frac{VQ}{Ib}$ = 500 lbs/$in^2$, Deflection @ A = 14.6 in.

Allowable Crippling Stress = $F_{cc}$ = 35,400 lbs/$in^2$

$$\text{Critical Margin of Safety} = \text{M.S.} = \frac{1}{\sqrt{\left(\frac{f_b}{F_b} + \frac{f_a}{F_a}\right)^2 + \left(\frac{f_s}{F_s}\right)^2}} - 1 = .15$$

NAME OF PART: Multiazimuth Chassis Track Pivot Beam

CRITICAL LOADING CONDITION

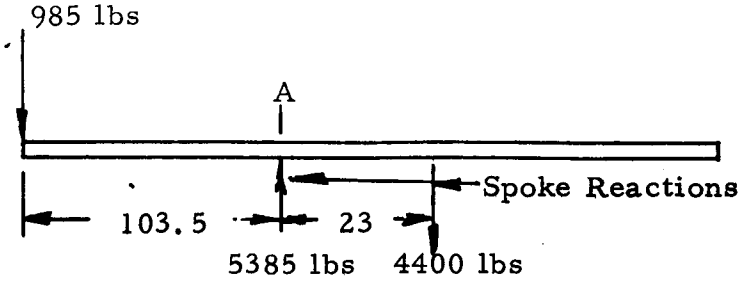


FIGURE C-5

SELECTED SECTION

Type: Flanged Channel
Section Modulus = Z = 1.92 $in^3$
Moment of Inertia = I = 3.778 $in^4$

Weight = w = 3.7 lbs/ft
Area = A = 3.05 $in^2$

STRESS ANALYSIS (Critical Stress)

Maximum Moment = $M_{max}$ = 102,000 in-lbs @ A
Maximum Shear Load = $V_{max}$ = 5,385 lbs.

Bending Stress = $f_b = \frac{M}{Z}$ = 53000 lbs/$in^2$

Shear Stress = $f_s = \frac{VQ}{Ib}$ = 2940 lbs/$in^2$

Critical Margin of Safety = M.S. = $\frac{1}{\sqrt{\left(\frac{f_b}{F_b} + \frac{f_a}{F_a}\right)^2 + \left(\frac{f_s}{F_s}\right)^2}} - 1 = .01$
(Axial Tension)

NAME OF PART: Multiazimuth Chassis Track Hub Assembly Spoke

CRITICAL LOADING CONDITION

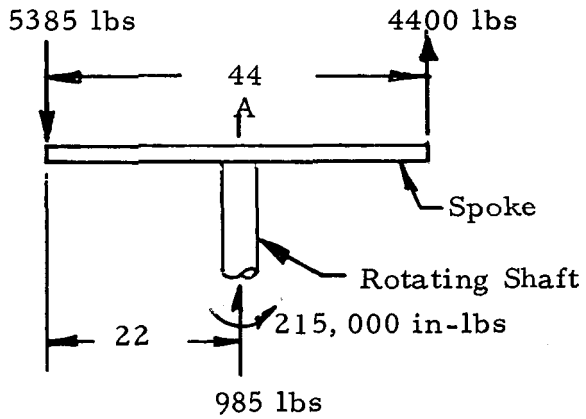


FIGURE C-6

SELECTED SECTION

Type: Wide Flange Section
Section Modulus = Z = 2.375 $in^3$
Moment of Inertia = I = 4.75 $in^4$

Weight = w= 3.11 lbs/ft
Area = A = 2.56 $in^2$

STRESS ANALYSIS (Critical Stress)

Maximum Moment = $M_{max}$ = 118,000 in-lbs @ A
Maximum Shear Load = $V_{max}$ = 5385 lbs

Bending Stress = $f_b = \frac{M}{Z}$ = 49,700 lbs/$in^2$

Shear Stress = $f_s = \frac{VQ}{Ib}$ = 2760 lbs/$in^2$

$$\text{Critical Margin of Safety} = \text{M. S.} = \frac{1}{\sqrt{\left(\frac{f_b}{F_b} + \frac{f_a}{F_a}\right)^2 + \left(\frac{f_s}{F_s}\right)^2}} - 1 = .075$$

NAME OF PART: Hub Assembly Rotating Shaft

CRITICAL LOADING CONDITION

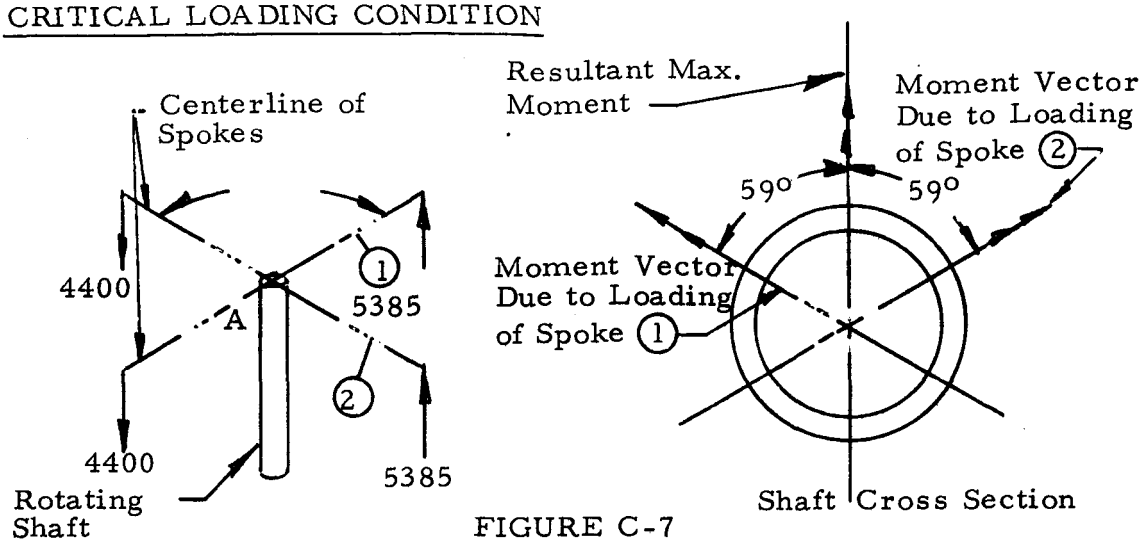


FIGURE C-7

SELECTED SECTION

Type: Hollow Tube
Section Modulus = Z = 4.22 $in^3$
Moment of Inertia = I = 10.55 $in^4$
Weight = w = 4.4 lbs/ft
Area = A = 3.73 $in^2$
Radius of Gyration = r = 1.68 in

STRESS ANALYSIS (Critical Stress)

Maximum Moment = $M_{max}$ = 221,000 in-lbs @ A
Maximum Axial Load = $P_{max}$ = 1970 lbs

Bending Stress = $f_b = \frac{M}{Z}$ = 52,500 lbs/$in^2$ Axial Stress = $f_a = \frac{P}{A}$ = 515 lbs/$in^2$

Critical Margin of Safety = M.S. = (Axial Compression)

$$\frac{1}{\frac{f_c}{F_c} + \sqrt{\left(\frac{f_b}{F_b}\right)^2 + \left(\frac{f_s}{F_s}\right)^2}} - 1 = .019$$

The pivot beams used for the one and two direction chassis track unloading systems were considered to be continuous beams over four supports. These systems differ from the multiazimuth system in that repositioning of the pivot beams is not required to complete the MOLAB unloading. Stationary pivot beams then, permit the use of vertical support struts and diagonal tension members, as opposed to the single center support for the multiazimuth system. The one and two direction chassis track system pivot beam critical loading is shown in Figure C-8.

The MOLAB tiedown structure used consists of vertical struts and diagonal tension members. The struts react the vertical load components while the diagonal members react the horizontal load component. The critical strut loading is shown in Figure C-9 for the combined 8 g vertical and horizontal landing shock factor.

NAME OF PART: One and Two Direction Chassis Track Pivot Beam

CRITICAL LOADING CONDITION

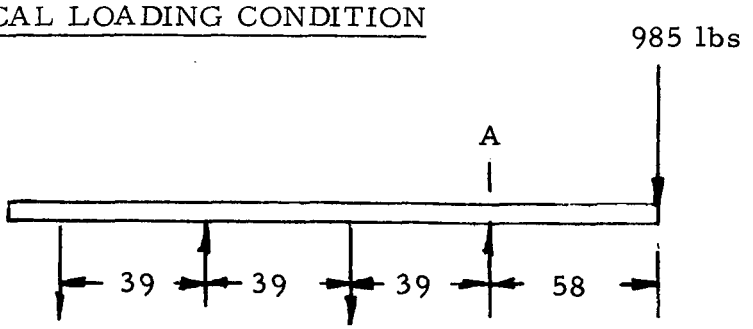


FIGURE C-8

SELECTED SECTION

Type: Flanged Channel
Section Modulus = Z = 1.34 $in^3$
Moment of Inertia = I = 2.48 $in^4$

Weight = w = 1.02 lbs/ft
Area = A = .84 $in^2$

STRESS ANALYSIS (Critical Stress)

Maximum Moment = $M_{max}$ = 57,000 in-lbs
Maximum Shear Load = $V_{max}$ = 985 lbs

Bending Stress = $f_b = \frac{M}{Z}$ = 42,400 lbs/$in^2$

Shear Stress = $f_s = \frac{VQ}{Ib}$ = 540 lbs/$in^2$

$$\text{Critical Margin of Safety} = \text{M.S.} = \frac{1}{\sqrt{\left(\frac{f_b}{F_b} \quad \frac{f_a}{F_a}\right)^2 \left(\frac{f_s}{F_s}\right)^2}} - 1 = .265$$

NAME OF PART: Tiedown System Strut

CRITICAL LOADING CONDITION

Max. Load Occurs on
Struts 1, 2, 3 or 4

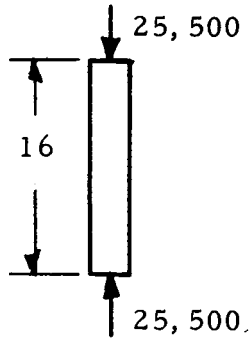


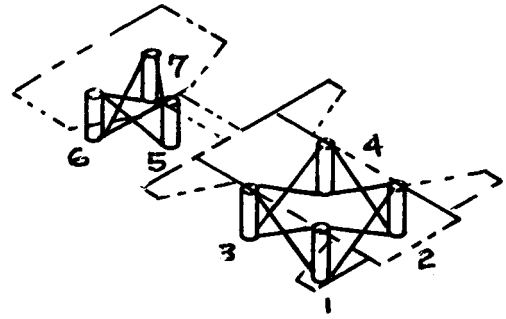


FIGURE C-9

SELECTED SECTION

Type: Hollow Tube
Section Modulus = Z = .420 $in^3$
Moment of Inertia = I = .473 $in^4$

Weight = w = .981 lbs/ft
Area = A = .834 $in^2$
Radius of Gyration = r = .753 in

STRESS ANALYSIS (Critical Stress)

Maximum Axial Load = $P_{max}$ = 25,500 lbs

Axial Stress = $f_a = \frac{P}{A}$ = 30,600 lbs/$in^2$

Allowable Column Stress = $F_c$ = 42,300 lbs/$in^2$

$$\text{Critical Margin of Safety} = \text{M.S.} = \frac{1}{\sqrt{\frac{f_c}{F_c} + \left(\frac{f_b}{F_b}\right)^2 + \left(\frac{f_s}{F_s}\right)^2}} - 1 = .38$$

DISTRIBUTION

INTERNAL

DIR
DEP-T
R-DIR
R-AERO-DIR
-S
-SP (23)
R-ASTR-DIR
-A (13)
R-P&VE-DIR
-A
-AB (15)
-AL (5)
R-RP-DIR
-J (5)
R-FP-DIR
R-FP (2)
R-QUAL-DIR
-J (3)
R-COMP-DIR
R-ME-DIR
-X
R-TEST-DIR
I-DIR
MS-IP
MS-IPL (8)

EXTERNAL

NASA Headquarters
MTF Col. T. Evans
MTF Maj. E. Andrews (2)
MTF Mr. D. Beattie
R-1 Dr. James B. Edson
MTF William Taylor

Kennedy Space Center
K-DF Mr. von Tiesenhausen

Northrop Space Laboratories
Huntsville Department
Space Systems Section (5)

Scientific and Technical Information Facility
P.O. Box 5700
Bethesda, Maryland
Attn: NASA Representative (S-AK RKT) (2)

Manned Spacecraft Center
Houston, Texas
Mr. Gillespi, MTG
Miss M. A. Sullivan, RNR
John M. Eggleston
C. Corington, ET-23 (1)
William E. Stanley, ET (2)

Donald Ellston
Manned Lunar Exploration Investigation
Astrogeological Branch
USGS
Flagstaff, Arizona

Langley Research Center
Hampton, Virginia
Mr. R. S. Osborn