https://ntrs.nasa.gov/search.jsp?R=19660006114 2018-07-25T23:42:02+00:00Z

NASA CR-66028

GPO PRICE $
CFSTI PRICE(S) $
Hard copy (HC) 2.00
Microfiche (MF) .50
ff 653 July 65

A Set of Simple, Accurate Equations for Circular Cylindrical Elastic Shells*

by

James G. Simmonds**

ABSTRACT

15403

A new set of equations for the linear behavior of elastically isotropic, constant thickness, circular cylindrical shells subject to edge and surface loads is proposed. The final form of the equations consists of a single, non-homogeneous, fourth order partial differential equation for a complex-valued displacement-stress function together with auxiliary equations for calculating all necessary quantities. The new equations are both concise and adequate in that they comprise a consistent first approximation theory as defined by Koiter. They are compared with previously proposed cylindrical shell equations and are shown to have special advantages while carefully avoiding certain inadequacies of the previous equations.

author

FACILITY FORM 602

N66-15403 (ACCESSION NUMBER)	(THRU)
43 (PAGES)	1 (CODE)
CR 66028 (NASA CR OR TMX OR AD NUMBER)	32 (CATEGORY)

*This work was supported in part by the National Aeronautics and Space Administration under Grant NsG-559, and by the Division of Engineering and Applied Physics, Harvard University, Cambridge, Massahcusetts.

**Research Fellow in Structural Mechanics, Harvard University

Distribution of this report is provided in the interest of information exchange. Responsibility for the contents resides in the author or organization that prepared it.

Report SM-4

A Set of Simple, Accurate Equations for Circular Cylindrical Elastic Shells*

by

James G. Simmonds**

1. INTRODUCTION

Circular cylindrical elastic shells of constant thickness, because they are technically important and easy to analyze mathematically; and because they exhibit nearly every type of behavior found in shells of more complicated geometry, have been extensively investigated throughout the history of shell theory, especially within the last 35 years. The technical uses of circular cylindrical shells are too well known to be catalogued here. Their mathematics is simple because of their simple midsurface geometry which makes their governing equations, in lines of curvature coordinates, of the constant coefficient type. The many important phenomena displayed by the equations of circular cylindrical shells, such as boundary layers, the degeneracy of boundary layers near edges which coincide or nearly coincide with midsurface asymptotic lines, the inadequacy of equating the two in-plane shear stress resultants, or the limitations of the assumption that the "interior" behavior of the shell is the sum of a membrane and an inextensional bending state, make circular cylindrical shells ideal for testing the adequacy of simplifications proposed in general shell theory.

---

* This work was supported in part by the National Aeronautics and Space Administration under Grant NsG-559, and by the Division of Engineering and Applied Physics, Harvard University, Cambridge, Massachusetts.

** Research Fellow in Structural Mechanics, Harvard University

In this paper we propose a new set of equations for the linear behavior of elastically isotropic, constant thickness, circular cylindrical shells subject to edge and surface loads. The final form of our equations consists of a single, non-homogeneous, fourth order partial differential equation for a complex-valued displacement-stress function, Ψ, together with auxiliary equations for midsurface displacements, stress resultants, stress couples, and effective Kirchhoff edge forces. The chief virtue of these new equations, as compared to others which have been proposed*, is that they are at once concise and adequate. By adequate, we mean that for any given set boundary conditions, the solution of the unreduced equations of any of the acceptable first approximation shell theories** will agree with the solutions of our equations to within errors inherent in the stress-strain relations of the first approximation theories themselves, namely, to within errors of $O(h/a)$ where h is the shell thickness and a the midsurface radius.

Our derivation starts from a set of equations for arbitrary shells first proposed by Sanders [3] in 1959. (An improved derivation of these equations, employing an exact definition of the modified symmetric shear stress resultant, is given by Budiansky and Sanders in [4].) Utilizing Koiter's arguments [2] on the adequacy of, and the errors in, Love's uncoupled stress-strain relations, we reduce the Sanders' equations for a circular cylindrical shell to two coupled fourth order partial differential equations for the midsurface normal deflection W and a stress function F. One of these equations has a non-homogeneous part involving the surface

---

* With the exception of Novozhilov's [1], which we discuss in section 2.

** As defined by Koiter [2].

loads and their integrals. In the reduction, the static geometric analogy enjoyed by the Sanders' equations is preserved, which enables us to combine the two equations for W and F into a single equation for a complex displacement-stress function Ψ. We further show that all auxiliary variables, or in some cases the first partial derivatives of these variables, can be expressed in terms of W, F, and load integrals alone.

The claim that our reduced equations are adequate is based on the fact that we make approximations only in those parts of the governing equations into which it is necessary to introduce stress-strain relations - namely, the bending terms in the equilibrium equations and the extensional strain terms in the compatibility equations - and that the approximations involve only neglect of terms of the type M/a compared to N or neglect of terms of the type ϵ/a compared to $\varkappa$, respectively, where M, N, ϵ, and $\varkappa$ are typical stress couples, stress resultants, extensional and bending strains. This means, first, that the errors we introduce into the stress-strain relations are consistent with the errors already contained in these relations because of the neglect of transverse shearing and normal stress effects [2]; and second, that for the extreme states of inextensional bending and pure membrane stress, where it is known that indiscriminate neglect of $O(h/a)$ terms in the governing equations can lead to errors of $O(1)$ in the final solutions*, our equations will lead to solutions with errors of only $O(h/a)$.

A summary of our final equations may be found in Section 7.

---

*We cite an example of this in section 2.

2. SIGNIFICANT DEVELOPMENTS IN THE HISTORY OF CIRCULAR CYLINDRICAL SHELLS

To place our results in perspective, we have listed in this section various sets of reduced equations which, in our opinion, have marked a significant development in the theory of circular cylindrical shells. No attempt has been made to indicate the method of derivation of these equations, nor have equations for auxiliary quantities and boundary conditions been listed, although these are certainly as important as the reduced equations themselves. Also, for simplicity, surface loads terms have been omitted. Shell geometry and sign convections for displacements, loads, stress-resultants, and stress couples are indicated in figure 1. Below, and elsewhere in this paper, primes and dots denote, respectively, differentiation with respect to the nondimensional axial distance $\xi = az$, and the angular variable θ.

The first set of cylindrical shell equations general enough to include all possible states of (linear) deformation, yet simple enough to yield manageable solutions, appear to have been given by Love in the 3rd edition (1920) of his treatise [5, pp. 574 ff]. (Also, [6, pp. 582 ff]). From the three exact force equilibrium equations expressed in terms of stress resultants and couples, Love obtained, via a set of stress-strain and strain displacement relations, 3 simultaneous equations for the midsurface displacements. In our notation, Love's equations read

$$U_{\xi}'' + \frac{1-\nu}{2} U_{\xi}^{\cdot\cdot} + \frac{1+\nu}{2}\left[1 - \frac{1}{12}\frac{1-\nu}{1+\nu}\left(\frac{h}{a}\right)^2\right] U_{\theta}'^{\cdot} + \nu W' + \frac{1-\nu}{24}\left(\frac{h}{a}\right)^2 W'^{\cdot\cdot} = 0 \qquad (2.1)$$

$$\frac{1-\nu}{2}\left[1 + \frac{1}{4}\left(\frac{h}{a}\right)^2\right] U_{\theta}'' + \left[1 + \underline{\frac{1}{12}\left(\frac{h}{a}\right)^2}\right] U_{\theta}^{\cdot\cdot} + \frac{1+\nu}{2} U_{\xi}'^{\cdot}$$

$$+ W^{\cdot} - \frac{1}{12}\left(\frac{h}{a}\right)^2 \left[\frac{3-\nu}{2} W'' + W^{\cdot\cdot}\right]^{\cdot} = 0 \qquad (2.2)$$

$$W + U_\theta^{\cdot} + \nu\, U_\xi' + \frac{1}{12}\left(\frac{h}{a}\right)^2 [\nabla^4 W - (2-\nu)\, U_\theta'''' - U_\theta^{\cdot\cdot\cdot}] = 0 \tag{2.3}$$

where ν is Poisson's ratio.

It seems curious that, despite the renown of Love's treatise, most writers credit Flügge [7] (1932) with having obtained the first adequate, workable, set of circular cylindrical shell equations. Certainly the well-known texts of Flügge [8], Timoshenko and Woinowsky-Krieger [9], Novozhilov [1], Vlassov [10], and Goldenveiser [11], as well as the two fundamental papers of Donnell [12], [13], make no <u>specific</u> mention of the above-cited equations of Love. This oversight is probably explained by the fact that one generally ascribes to Love a set of equations based on his first-approximation theory [6, p. 531] which assumes that the two in-plane shear stress resultants, $N_{\xi\theta}$ and $N_{\theta\xi}$, are equal*. However, in his derivation of (2.1) to (2.3), Love <u>distinguished</u> between $N_{\xi\theta}$ and $N_{\theta\xi}$, obtaining an expression for $N_{\xi\theta} + N_{\theta\xi}$ from the stress-strain relations and an expression for $N_{\xi\theta} - N_{\theta\xi}$ from the moment equilibrium equation about the normal.

It should be emphasized that, in general, terms of relative order $(h/a)^2$ in (2.1) to (2.3) <u>cannot</u> be neglected even though terms of relative order (h/a) were neglected in the derivation of the stress-strain relations used in obtaining (2.1) to (2.3). To cite an example, if we set $U_\xi = (\ )' = 0$, (2.1) to (2.3) reduce, as they should, to the two equations of ring bending of plane strain theory. If U_θ is now eliminated between these two equations, the terms independent of (h/a) identically cancel, and the following equation for W is obtained.

$$(W^{\cdot\cdot\cdot\cdot} + 2\, W^{\cdot\cdot} + W)^{\cdot} = 0 \tag{2.4}$$

---

*An example of the non-negligible errors this assumption can introduce is given by Reissner [14], [15].

Had the underlined term in (2.2) been omitted as being of relative order $(h/a)^2$, then the last term in (2.4), which is non-negligible, would have erroneously been found to be zero.

This importance of apparently negligible terms in (2.1) to (2.3), which is by no means unique to the Love equations, is closely related to problems of inextensional and partially inextensional deformation, and is one of the chief drawbacks in taking the midsurface displacements as the dependent variables. A great advantage of the dual displacement-stress function approach used to derive the new set of equations proposed in the present paper is that this small-term problem is completely avoided.

The popular Flügge equations [7], [8, p. 219]*, in our notation, read

$$U_\xi'' + \frac{1-\nu}{2}\left[1+\frac{1}{12}\left(\frac{h}{a}\right)^2\right] U_\xi^{\cdot\cdot} + \frac{1+\nu}{2} U_\theta'^{\cdot} + \nu W' + \frac{1}{12}\left(\frac{h}{a}\right)^2 \left(\frac{1-\nu}{2} W^{\cdot\cdot} - W''\right)^{\cdot} = 0 \quad (2.5)$$

$$\frac{1-\nu}{2}\left[1+\frac{1}{4}\left(\frac{h}{a}\right)^2\right] U_\theta'' + U_\theta^{\cdot\cdot} + \frac{1+\nu}{2} U_\xi'^{\cdot} + W^{\cdot} - \frac{3-\nu}{24}\left(\frac{h}{a}\right)^2 W'''^{\cdot} = 0 \quad (2.6)$$

$$W + U_\theta^{\cdot} + \nu U_\xi'$$
$$+ \frac{1}{12}\left(\frac{h}{a}\right)^2 \left(\nabla^4 W + 2W^{\cdot\cdot} + \underline{W} + \frac{1-\nu}{2} U_\xi'^{\cdot\cdot} - U_\xi''' - \frac{3-\nu}{2} U_\theta'''^{\cdot}\right) = 0 \quad (2.7)$$

Note that the terms in (2.5) to (2.7) proportional to $(h/a)^2$ are considerably different from the corresponding terms in (2.1) to (2.3). In particular, the term of relative order $(h/a)^2$ which must be kept in order to obtain the equations of ring bending - the underlined term in (2.7) - now appears in a different place and in a different form than it did in Love's equations.

---

*The original papers of Flügge [7] and Donnell [12], [13] were concerned primarily with buckling problems, and their equations contain a number of non-linear terms. Any references in this paper are to the linear parts of these equations.

A significant simplification of Flügge's equations was proposed by Donnell [12] in 1933 in conjunction with an analysis of torsional buckling. By omitting a number of terms in Flügge's equations, Donnell was able to obtain the single eighth order equation,

$$\nabla^8 W + 4\mu^4 W'''' = 0 \tag{2.8}$$

where

$$4\mu^4 = 12(1-\nu^2)\ (a/h)^2 \tag{2.9}$$

is a large parameter which appears constantly throughout the rest of this paper. As Donnell himself indicated [12], (2.8) is generally valid only if the deformation pattern has a characteristic circumferential wavelength small compared to the radius a. The fact that (2.8) does not include the ring bending equation (2.4) as a special case is evidence of this limitation.

To obtain a more accurate equation than (2.8), Donnell [13] in 1938 started with a set of shell equations in which he attempted, at the start, "to include all terms which might be significant". He then reduced these equations to a single equation for W without neglecting any terms along the way and attempted to ascertain which terms in this single equation could be neglected. The "modified" or "extended" equation obtained in this fashion was

$$\nabla^8 W + 2W^{\cdot\cdot\cdot\cdot\cdot\cdot} + W^{\cdot\cdot\cdot\cdot} + 4\mu^4 W'''' = 0 \tag{2.10}$$

which differs from (2.8) only by the addition of two terms.

Although (2.10) now includes the ring bending equation (2.4) as a special case, it still contains another limitation pointed out to me by Dr. V. T. Buchwald. As shown in section 8, the extended Donnell equation (2.10) leads to an <u>incorrect</u> overall moment-curvature relation for a very long cantilevered circular cylindrical shell acted upon by a net moment at its free end.

In 1958 Morley [17], seeking an equation which retained the accuracy of Flügge's equations* but the simplicity of Donnell's equation (2.8), proposed the equation

$$\nabla^4(\nabla^2+1)^2 W + 4\mu^4 W'''' = 0 \tag{2.11}$$

Morley's equation contains several notable improvements over Donnell's extended equation (2.10). First, the necessarily invariant nature of the equation for W is more evident. Second, (2.11) contains both ring <u>and</u> beam bending as special cases. And third, (2.11) can be factored into the form

$$[\nabla^2(\nabla^2+1) + i2\mu^2\partial^2/\partial x^2][\nabla^2(\nabla^2+1) - i2\mu^2\partial^2/\partial x^2]W = 0 \tag{2.12}$$

which, among other things, tremendously simplifies calculation of the roots of the characteristic polynomials which arise from solving (2.11) by separation of variables.

The numerous contributions of Soviet writers to the theory of cylindrical shells is outlined in chapter III of Novozhilov's book [1]. We mention here two important, and relevant equations. According to Novozhilov [1, p. 90], Feinburg in 1936 proposed a simplified equation of the form

$$\nabla^4 \Psi - i2\mu^2 \Psi'' = 0 \tag{2.13}$$

where Ψ is a complex-valued displacement-stress function defined by

$$\Psi = W + i(2\mu^2/E\,a\,h)\,F \tag{2.14}$$

The new symbols appearing in (2.14) are F, the airy stress function of plane stress theory and E, Young's modulus. Equation (2.13) will be recognized as nothing more than the basic equation of shallow shell theory specialized to a cylinder**. Upon elimination of F, (2.13) reduces to the simplified

---

*By this time, Flügge's equations had been reduced to a single equation for W.

**Of course, at the time, Marguerre's general theory of shallow shells [18] had not appeared.

Donnell equation (2.8), and thus suffers from the same limitations as this latter equation. Nevertheless, there are good reasons why it is preferable to work with Feinburg's equation instead of Donnell's. First, (2.13) emphasizes the basic duality among the field equations of shell theory known as the static-geometric analogy (of which more shall be said later). Second, as a consequence of the static-geometric analogy, the order of (2.13) is, effectively, half that of (2.8). This is especially useful in simplifying the algebra in those cases where the boundary conditions can be expressed in terms of W and F alone. (e.g., see [19]). And third, by working with W and F (i.e., Ψ) instead of W alone, a number of auxiliary formulas are greatly simplified. For example, when using the simplified Donnell equations, the only way to express the axial stress resultant N_ξ in terms of W alone is to write

$$a \nabla^4 N_\xi = - (1-\nu^2) E h W'''' \tag{2.15}$$

whereas, using the Feinburg equations, one has, simply,

$$a^2 N_\xi = F'' \tag{2.16}$$

In 1946 Novozhilov [1, p. 184] proposed an equation for cylindrical shells of arbitrary cross-section which, specialized to circular cross sections, reads in our notation

$$\nabla^4 \tilde{T} + \tilde{T}'' - i2 \mu^2 \tilde{T}'' = 0 \tag{2.17}$$

where

$$\tilde{T} = N_\xi + N_\theta - i(E h a/2 \mu^2)(\varkappa_\xi + \varkappa_\theta) \tag{2.18}$$

and $\varkappa_\xi$ and $\varkappa_\theta$ are bending strains. Note that, aside from the different dependent variable, (2.17) differs in form from (2.13) only by the addition of a single term, yet because of this term, (2.17) is applicable to both ring and beam bending, though (2.13) is not.

Despite its compactness and comprehensiveness, Novozhilov's equation has not received much attention in the Western literature. One reason is the relatively recent translation date of his book (1959). Another may be that, in deriving (2.17), Novozhilov begins by specializing to cylindrical shells, a set of equilibrium-compatibility equations for arbitrary shells [1, Eqs. (16.10)] into which he has introduced the assumption that the in-plane shear stress resultants are equal [1, Eq. (16.4)]. However, it turns out that, for circular cylindrical shells at least, this assumption is unnecessary, if, in Eqs. (40.3) of [1], one takes

$$\tilde{S} = N_{\theta\xi} - i(E\,h\,a/\,2\,\mu^2)\,\chi_{\theta\xi} \tag{2.19}$$

Finally, we mention a recent paper by Lukasiewicz [20] in which an attempt is made to reduce the equations for arbitrary shells to two coupled equations for W and an Airy-type stress function F. For circular cylindrical shells, Lukasiewicz's equations reduce to

$$D(\nabla^2 + 1)^2\,W - a\,F'' = 0 \tag{2.20}$$

$$A\,\nabla^4\,F + a\,W = 0 \tag{2.21}$$

where

$$D = \frac{Eh^3}{12(1-\nu^2)} \quad \text{and} \quad A = \frac{1}{Eh} \tag{2.22}$$

Upon elimination of F, (2.20) and (2.21) reduce to Morley's equation (2.11). While one might criticize the lack of symmetry between (2.20) and (2.21), the most important shortcoming in Lukasiewicz's results are his auxiliary equations, which can easily be shown not to be universally applicable. Two of the objectionable auxiliary equations are

$$N_{\xi\theta} = N_{\theta\xi} \qquad [20, \text{Eq. } (3.1)_3] \tag{2.23}$$

and

$$M_{\xi\theta} = M_{\theta\xi} = D(1-\nu)\,W'' \qquad [20, \text{Eqs. } (3.1)_6 \text{ and } (5.1)_3] \tag{2.24}$$

Reissner's analysis of the split tube under torsion [14] [15] shows that (2.23) is unacceptable, and it is not difficult to construct another problem to show that (2.24) is generally incorrect.

The new reduced equation for circular cylindrical shells proposed in this paper is

$$\nabla^4 \Psi + \Psi^{\cdot\cdot} + \lambda \Psi'' - 12\mu^2 \Psi'' = 0 \tag{2.25}$$

where Ψ is given by (2.14) and λ can be any arbitrary O(1) constant. Thus our equation resembles an amalgam of the results of Feinburg, Novozhilov, and Lukasiewicz: our complex displacement-stress function Ψ is the same as Feinburg's; the form of (2.25), with $\lambda = 0$, is identical to Novozhilov's (2.17); and we have attempted, as has Lukasiewicz, to extend the use of the basic variables of shallow shell theory, W and F, to non-shallow circular cylindrical shells.

A brief comparison of our equation (2.25) and Novozhilov's (2.17) is of interest. The great advantage of Novozhilov's equation is that it easily generalizes to arbitrary cylindrical shells while ours does not*. On the other hand our dependent variable Ψ, being essentially a twice integrated form of Novozhilov's dependent variable $\tilde{T}$, seems more convenient for the application of boundary conditions. Moreover, the form of our equation provides a ready comparison with the standard form of the shallow cylindrical shell equation, (2.13).

3. THE SANDERS' EQUATIONS FOR A CIRCULAR CYLINDRICAL SHELL

Specialized to a circular cylindrical shell, the field equations of the Sanders' theory [3,4], in the notation of figure 1, consist of three

---

*In fact, some unpublished calculations indicate that only the equations of shallow, (nearly) spherical, and (nearly) cylindrical shells can be reduced, without loss of generality, to two coupled equations for the normal deflection on a stress function.

exact reduced force equilibrium equations

$$a(N_\xi' + S^\cdot) - \frac{1}{2} T^\cdot + a^2 p_\xi = 0 \tag{3.1a}$$

$$a(S' + N_\theta^\cdot) + \frac{3}{2} T' + M_\theta^\cdot + a^2 p_\theta = 0 \tag{3.1b}$$

$$M_\xi'' + 2T'^\cdot + M_\theta^{\cdot\cdot} - a N_\theta + a^2 p = 0 \quad , \tag{3.1c}$$

six exact strain-displacement relations

$$a^2 \varkappa_\xi = -W'' \quad , \quad a^2 \varkappa_\theta = -W^{\cdot\cdot} + U_\theta^\cdot \tag{3.2a,b}$$

$$a^2 \tau = -W'^\cdot + \frac{3}{4} U_\theta' - \frac{1}{4} U_\xi^\cdot \tag{3.2c}$$

$$a\, \epsilon_\xi = U_\xi' \quad , \quad a\, \epsilon_\theta = U_\theta^\cdot + W \tag{3.3a,b}$$

$$a\, \gamma = \frac{1}{2}(U_\theta' + U_\xi^\cdot) \quad , \tag{3.3c}$$

plus a set of approximate stress-strain relations which, for an elastically isotropic shell, can be taken in the form*

$$\epsilon_\xi = A(N_\xi - \nu N_\theta), \quad M_\theta = D(\varkappa_\theta + \nu \varkappa_\xi) \tag{3.4a,b}$$

$$\epsilon_\theta = A(N_\theta - \nu N_\xi), \quad M_\xi = D(\varkappa_\xi + \nu \varkappa_\theta) \tag{3.4c,d}$$

$$\gamma = A(1+\nu)S \quad , \quad T = D(1-\nu)\tau \tag{3.4e,f}$$

where A and D are defined by (2.22).

In (3.1) and (3.4), S and T are, respectively, a modified shear stress resultant and a modified twisting stress couple, defined by Budiansky and Sanders [4] in terms of the conventional unsymmetric stress resultants and couples as follows:

---

*When we wish to distinguish between (3.4a,c,e) and (3.4b,d,f), we shall refer to the former as the force-extension relations and the latter as the moment-curvature relations.

$$S = \frac{1}{2}(N_{\xi\theta} + N_{\theta\xi}) - \frac{1}{2a} M_{\theta\xi} \tag{3.5}$$

$$T = \frac{1}{2}(M_{\xi\theta} + M_{\theta\xi}) \tag{3.6}$$

For a complete system, the above equations must be supplemented by boundary conditions. These may be read off from the expression for the work of the edge loads, $a\Pi_E$. Assume for simplicity that we are dealing with a panel of nondimensional length $\xi = \ell$ and angular width $\theta = \alpha$. Then, with the displacements satisfying the Kirchhoff hypothesis, we have

$$\begin{aligned}
\Pi_E = & \int_0^{\ell} [N_\theta U_\theta + S_\theta U_\xi + R_\theta W + M_\theta \varphi_\theta]_{\theta=0} d\xi \\
& + \int_0^{\alpha} [N_\xi U_\xi + S_\xi U_\theta + R_\xi W + M_\xi \varphi_\xi]_{\xi=\ell} d\theta \\
& + \int_{\ell}^{0} [N_\theta U_\theta + \ldots]_{\theta=\alpha} d\xi + \int_{\alpha}^{0} [N_\xi U_\xi + \ldots]_{\xi=0} d\theta \\
& + [2TW]_{\substack{\xi=0\\ \theta=0}} + \ldots + [2TW]_{\substack{\xi=0\\ \theta=\alpha}}
\end{aligned} \tag{3.7}$$

where

$$\varphi_\xi = - a^{-1} W' , \quad \varphi_\theta = - a^{-1}(W^{\cdot} - U_\theta) \tag{3.8}$$

are the edge rotations and

$$S_\xi = N_{\xi\theta} + a^{-1} M_{\xi\theta} \quad , \quad S_\theta = N_{\theta\xi} \tag{3.9a,b}$$

$$R_\xi = Q_\xi + a^{-1} M^{\cdot}_{\xi\theta} \quad , \quad R_\theta = Q_\theta + a^{-1} M'_{\theta\xi} \tag{3.10a,b}$$

are the effective Kirchhoff edge forces. In terms of the Budiansky-Sanders variables, (3.9) and (3.10) can be expressed <u>exactly</u> as

$$S_\xi = S + \frac{3}{2} a^{-1} T \quad , \quad S_\theta = S - \frac{1}{2} a^{-1} T \tag{3.11a,b}$$

$$R_\xi = a^{-1}(M'_\xi + 2T^{\cdot}), \quad R_\theta = a^{-1}(M^{\cdot}_\theta + 2T') \tag{3.12a,b}$$

Thus a typical stress boundary condition, say $R_\xi = \bar{R}_\xi(\theta)$, reads, in expanded form,

$$M'_\xi + 2T^{\cdot} = a\,\bar{Q}_\xi(\theta) + \bar{M}^{\cdot}_{\xi\theta}\ (\theta) \tag{3.13}$$

where a bar denotes a prescribed quantity

4. COMPATIBILITY CONDITIONS, THE STATIC-GEOMETRIC ANALOGY, AND STRESS FUNCTIONS

While the equations of the preceeding section are a complete set, a more symmetric formulation is possible utilizing the Goldenveizer-Lur'e [11] static-geometric analogy*. The static-geometric analogy permits the governing equations to be stated in a concise and elegant form, and in many cases (but not all!), the order of these equations is thereby halved. In our reduction of the Sanders' equations for the circular cylindrical shell, the static-geometric analogy shall be exploited fully.

Since the 6 extensional and bending strains are expressable in terms of the 3 midsurface displacement components, they cannot be specified independently, but must satisfy compatibility conditions. From (3.2) and (3.3) these follow as

$$a(-\varkappa'_\theta + \tau^{\cdot}) + \frac{1}{2}\gamma^{\cdot} = 0 \tag{4.1a}$$

$$a(\tau' - \varkappa^{\cdot}_\xi) - \frac{3}{2}\gamma' + \epsilon^{\cdot}_\xi = 0 \tag{4.1b}$$

$$\epsilon''_\theta - 2\,\gamma'^{\cdot} + \epsilon^{\cdot\cdot}_\xi + a\,\varkappa_\xi = 0 \tag{4.1c}$$

If we set $p_\xi = p_\theta = p = 0$ and make the following correspondence of variables (the static-analogy),

$$N_\xi \leftrightarrow -\varkappa_\theta, \qquad N_\theta \leftrightarrow -\varkappa_\xi, \qquad S \leftrightarrow t \tag{4.2a,b,c}$$

$$\epsilon_\xi \leftrightarrow M_\theta\ , \qquad \epsilon_\theta \leftrightarrow M_\xi\ , \qquad \gamma \leftrightarrow -T \tag{4.3a,b,c}$$

---

*Not all of the linear shell equations proposed in the literature admit a static-geometric analogy. The general form of those which do is given in [4].

then (3.1) and (4.1) become identical.

When the strains are expressed in terms of the displacements, equations (4.1) are identically satisfied. Let particular solutions of (3.1) be given by the surface load integrals of membrane theory. It then follows from the static-geometric analogy that if we introduce the following correspondence between displacements and stress functions

$$W \leftrightarrow F, \qquad U_\xi \leftrightarrow H_\xi, \qquad U_\theta \leftrightarrow H_\theta, \tag{4.4a,b,c}$$

the reduced force equilibrium equations will be identically satisfied if the stress resultants and couples are expressed as follows.

$$a^2 N_\xi = F^{\cdot\cdot} - H_\theta^{\cdot} + a^3 \int [\int (p^{\cdot\cdot} + p_\theta^{\cdot}) \, d\xi - p_\xi] \, d\xi \tag{4.5a}$$

$$a^2 N_\theta = F'' + a^3 p \tag{4.5b}$$

$$a^2 S = - F'^{\cdot} + \frac{3}{4} H_\theta' - \frac{1}{4} H_\xi^{\cdot} - a^3 \int (p^{\cdot\cdot} + p_\theta^{\cdot}) \, d\xi \tag{4.5c}$$

$$a M_\xi = H_\theta^{\cdot} + F, \qquad a M_\theta = H_\xi' \tag{4.6a,b}$$

$$a T = - \frac{1}{2}(H_\theta' + H_\xi^{\cdot}) \tag{4.6c}$$

Stress function representations for the effective Kirchhoff edge forces S_ξ, S_θ, R_ξ, and R_θ are also of interest. These follow from (3.11), (3.12), (4.5) and (4.6) as

$$a^2 S_\xi = -(F' + H_\xi)^{\cdot} - a^3 \int (p^{\cdot\cdot} + p_\theta^{\cdot}) \, d\xi \tag{4.7a}$$

$$a^2 S_\theta = -(F^{\cdot} - H_\theta)' - a^3 \int (p^{\cdot\cdot} + p_\theta^{\cdot}) \, d\xi \tag{4.7b}$$

$$a^2 R_\xi = F' - H_\xi^{\cdot\cdot}, \qquad a^2 R_\theta = - H_\theta'' \tag{4.8a,b}$$

A further duality among the field equations is exhibited by the stress-strain relations. Observe that if we introduce the correspondence of

elastic constants

$$A \leftrightarrow -D, \qquad \nu \leftrightarrow -\nu \tag{4.9a,b}$$

and use (4.2) and (4.3), then the pairs (3.4a,b), (3.4c,d), and (3.4e,f) become identical.

5. REDUCTION OF THE SANDERS' FIELD EQUATIONS

We now proceed, with the aid of certain arguments of Koiter [2], to reduce the Sanders' field equations to two coupled fourth order partial differential equations for the normal midsurface deflection W, and the stress function F. Because of the static-geometric analogy, we shall be able to combine these two equations into a single equation for a complex displacement-stress function Ψ. The reduction is straightforward, and analogous to the one used in shallow shell theory.

We begin with the reduced normal force equilibrium equation,

$$M_x'' + 2T'' + M_\theta'' - aN_\theta + a^2 p = 0 \tag{5.1}$$

As noted before, this equation becomes identically satisfied when the stress resultants and couples are expressed in terms of stress functions and load integrals. If instead, we express the stress couples in terms of displacements via the moment-curvature relations (3.4b,d,f) and strain-displacement relations (3.2), but leave N_θ in terms of F and p, then (5.1) can be written

$$D[\nabla^4 W + f(U_\xi, U_\theta, W)] + a F'' = 0 \tag{5.2}$$

where

$$f(U_\xi, U_\theta, W) = \frac{1}{2}(1-\nu)\, U_\xi'' - \frac{1}{2}(3-\nu)\, U_\theta'' - U_\theta'' \tag{5.3}$$

By use of the strain-displacement relations (3.2a) and (3.3), and the compatibility equation (4.1c), we can write

$$f(U_\xi, U_\theta, W) = W^{\cdot\cdot} + a[-(3-\nu)\,\gamma^{\cdot\cdot} + (2-\nu)\,\epsilon_\xi^{\cdot\cdot} - \epsilon_\theta^{\cdot\cdot}] \tag{5.4}$$

The following, more general form of f is obtained if (4.1c) is multiplied by an arbitrary constant λ and added to (5.4):

$$f(U_\xi, U_\theta, W) = W^{\cdot\cdot} + \lambda W'' - a\,\underline{[\lambda\,\epsilon_\theta'' + (3-2\lambda-\nu)\,\gamma'' - (2-\lambda-\nu)\,\epsilon_\xi^{\cdot\cdot} + \epsilon_\theta^{\cdot\cdot}]} \tag{5.5}$$

We now come to the crucial argument in our reduction. We observe that had we started with the set of stress-strain relations

$$M_\xi = D[\varkappa_\xi + \nu\,\varkappa_\theta - \underline{a^{-1}\,\lambda\,\epsilon_\theta}] \tag{5.6a}$$

$$M_\theta = D[\varkappa_\theta + \nu\,\varkappa_\xi + \underline{a^{-1}(2-\lambda-\nu)\,\epsilon_\xi - a^{-1}\,\epsilon_\theta}] \tag{5.6b}$$

$$T = D[(1-\nu)\,\tau - \underline{\tfrac{1}{2}\,a^{-1}(3-2\lambda-\nu)\,\gamma}], \tag{5.6c}$$

instead of (3.4b,d,g), then the underlined terms in (5.5) would have been identically zero. Now the stress-strain relations in any first approximation shell theory including Sanders' are obtained from the stress-strain relations (or the strain energy function) of three dimensional elasticity by invoking the Kirchhoff hypothesis or some equivalent, such as the assumption of a state of three-dimensional plane stress. But Koiter [2] has shown that the errors one introduces into the stress-strain relations of shell theory by the adoption of the Kirchhoff hypothesis are of the same order of magnitude as those one introduces by replacing a bending strain term of the type $\varkappa$ by a term of the type $\varkappa + O(\epsilon/a)$. Thus, assuming λ to be an arbitrary constant of $O(1)$, we conclude that it is consistent to neglect the underlined terms in (5.5) and (5.6), and therefore to take (5.2) in the simplified form

$$D(\nabla^4 W + W^{\cdot\cdot} + \lambda W'') + a F'' = 0 \tag{5.7}$$

To obtain a second equation relating W and F, we give an analogous treatment to the third compatibility equation,

$$\epsilon_\theta'' - 2\gamma'^{\cdot} + \epsilon_\xi^{\cdot\cdot} + a \varkappa_\xi = 0 \tag{5.8}$$

Expressing the extensional strains in terms of stress functions and load integrals via (3.4a,c,e) and (4.5), and setting $a^2 \varkappa_\xi = - W''$, we find that (5.8) reduces to

$$A[\nabla^4 F + f(H_\xi, H_\theta, F)] - a W'' = -a^3 A P(p_\xi, p_\theta, p) \tag{5.9}$$

where

$$P(p_\xi, p_\theta, p) = \nabla^4(\int\int p \, d\xi \, d\xi) + \nu p_\xi' - \int p_\xi^{\cdot\cdot} \, d\xi + (2 + \nu) p_\theta^{\cdot} + \int\int p_\theta^{\cdot\cdot\cdot} \, d\xi \, d\xi \tag{5.10}$$

and where f is precisely the same function (but with different arguments) as defined by (5.5).

By virtue of the static-geometric analogy, it follows that Koiter's arguments also imply that the errors we introduce into the force-extension relations (3.4a,c,e) by replacing terms of the type N by terms of the type $N + O(M/a)$, are of the same order of magnitude as the errors already contained in these equations as a consequence of the Kirchhoff hypothesis. Thus we conclude that it is consistent to set

$$f(H_\xi, H_\theta, F) = F^{\cdot\cdot} + \lambda F'' , \tag{5.11}^*$$

---

*We could choose the arbitrary constant in (5.11) different from the constant λ in (5.5). For symmetry, however, we do not.

whereupon (5.9) reduces to

$$A(\nabla^4 F + F^{\cdot\cdot} + \lambda F'') - a W'' = -a^3 A P(p_\xi, p_\theta, p) \tag{5.12}$$

Equations (5.7) and (5.12) are the two coupled fourth order equations we set out to derive. They may be expressed in a more concise form by dividing (5.7) by D and then adding to it (5.12) multiplied by $i(AD)^{-\frac{1}{2}}$. This yields the single equation

$$\nabla^4 \Psi + \Psi^{\cdot\cdot} + \lambda \Psi'' - i\, 2\mu^2 \Psi'' = -\, i 2\mu\, a^2 A P(p_\xi, p_\theta, p) \tag{5.13}$$

where

$$\Psi = W + i\sqrt{A/D}\, F \tag{5.14}$$

and

$$2\mu^2 = a/\sqrt{AD} = \sqrt{12(1-\nu^2)}\;\; a/h \tag{5.15}$$

A number of remarks are now in order. First, we reiterate that that the only place we have introduced approximations is in the stress-strain relations, and that these approximations have been consistent with the approximations inherent in the stress-strain relations of any first approximation shell theory.

Second, even though it is consistent to set $N \approx N + O(M/a)$ and $\varkappa \approx \varkappa + O(\epsilon/a)$ in the stress-strain relations, this does not necessarily imply that $N >> O(M/a)$ or $\varkappa >> O(\epsilon/a)$. For example, if a state of inextensional bending occurs (such as ring bending), we have, generally, $N = O(M/a)$; consequently, the uncoupled force-extension relations (3.4a,c,e) cease to have any meaning. But this makes sense, for it shows that it is not inconsistent to have zero extensional strains but non-zero stress resultants. Incidentally, the fact that the coefficient of A in (5.9) contains relative errors of $O(1)$ for inextensional bending is inconsequential, since, necessarily, inextensional bending occurs only if the W-term on the left hand side of (5.9) dominates.

Third, the way in which we have introduced the load integrals is not unique. An alternate way which may be useful when the tangential loads are derivable from a potential, i.e., when

$$p_\xi = -\Omega', \qquad p_\theta = -\Omega^{\cdot}$$

is to define a new stress function

$$F_* = F - a^3 \iint (\Omega - p)\, d\xi\, d\xi \tag{5.16}$$

Then (5.7) and (5.11) read

$$D(\nabla^4 W + \underline{W^{\cdot\cdot} + \lambda W''}) + a F_*'' = a^4(p - \underline{\Omega}) \tag{5.17}$$

$$A(\nabla^4 F_* + \underline{F_*^{\cdot\cdot} + \lambda F_*''}) - a W'' =$$

$$- a^3 A[(1-\nu)\nabla^2 \Omega + \underline{\iint (\Omega - p)^{\cdot\cdot}\, d\xi\, d\xi + \lambda(\Omega - p)}] \tag{5.18}$$

In this form, the reduced equations resemble the equations of shallow shell theory, with the exception of the terms with a dashed underline.

Fourth, our freedom in choosing the constant λ is useful both in simplifying algebra and in comparing our equations with those of other writers. For example, if for a cylindrical shell complete in the θ - direction we assume a product solution of the form

$$\Psi(\xi,\theta) = e^{p\xi} \cos n\theta \qquad n = 0,1,2,\ldots \tag{5.19}$$

then the choice $\lambda = 0$ gives the simplest polynomial for p except for $n = 1$, in which case the choice $\lambda = 2$ leads to the simplest polynomial.

To compare (5.13) to other reduced equations which have been proposed, we first set $\lambda = 0$. The homogeneous part of (5.13) in this case is identical in <u>form</u> to an equation proposed by Novozhilov. However, as noted in section 2, the dependent variable in Novozhilov's equation is

$$\tilde{T} = N_\xi + N_\theta - i(Eha/2\mu^2)\,(\kappa_\xi + \kappa_\theta)$$

We now set $\lambda = 1$, write (5.13) as two real equations, and eliminate F between them, obtaining thereby

$$\nabla^4(\nabla^2+1)^2 W + 4\mu^4 W'''' = (a^4/D)\,[\nabla^4 p - p_\xi'''' + 2p_\theta'''' + p_\theta'''' + \nu(p_\xi' + p_\theta')''] \tag{5.20}$$

which is the equation proposed by Morley [17]* on an admittedly <u>ad hoc</u> basis.

Finally, let us see if it is possible to reduce our equations to the extended Donnell equation, (2.10). Since preserving the static-geometric analogy is of no concern here, we can obtain more flexibility by taking the arbitrary $O(1)$ constants in (5.12) and (5.13) to be different. Calling the constant in (5.12) λ_*, eliminating F between (5.7) and (5.11), and, for simplicity, setting $P = 0$, we obtain the equation

$$\begin{aligned}&\nabla^8 W + 2W'''''' + W'''' + 4\mu^4 W'''' \\ &+ (\lambda+\lambda_*)\, W'''''' + 2(1+\lambda+\lambda_*)\, W'''''' + (4+\lambda+\lambda_*)\, W'''' \\ &+ (\lambda + \lambda_*)\, W'''' + \lambda\,\lambda_*\, W'''' = 0\end{aligned} \tag{5.21}$$

from which it is clear that <u>no choice of λ and λ_* will yield the extended Donnell equation (2.10).</u>

6. FORMULAS FOR AUXILIARY VARIABLES

In this section simplified formulas are developed for the auxiliary variables U_ξ, U_θ, N_ξ, N_θ, S, S_ξ, S_θ, R_ξ, R_θ, M_ξ, M_θ, and T. Formulas for H_ξ, H_θ, ..., γ are generally of secondary interest, but, if needed, can

---

*Morley assumed $p_\xi = p_\theta = 0$.

be easily obtained from the above formulas by the static-geometric analogy (with due regard for load integrals). We find that N_ξ, N_θ, R_ξ, R_θ, M_ξ, and M_θ, and the first derivatives of U_ξ, U_θ, S, S_ξ, S_θ, and T can be expressed entirely in terms of W, F, and load integrals. It is here that we differ with Lukasiewicz [20] whose results imply that <u>all</u> the stress variables can be expressed in undifferentiated form in terms of W, F, and load integrals. The expressions below have been derived in order of convenience. An orderly summary of these results is given in Section 7.

Consider first the moment-displacement relations for M_ξ and M_θ:

$$M_\xi = D(\varkappa_\xi + \nu\, \varkappa_\theta) \quad , \quad M_\theta = D(\varkappa_\theta + \nu\, \varkappa_\xi) \tag{3.4b,d)'}$$

$$a^2\, \varkappa_\xi = -\, W'' \quad , \quad a^2\, \varkappa_\theta = -\, W^{\cdot\cdot} + U_\theta^{\cdot} \tag{3.2a,b)'}$$

Using (3.3b) we can write

$$a^2\, \varkappa_\theta = -(W^{\cdot\cdot} + W) + a\, \epsilon_\theta \tag{6.1}$$

As it stands, (6.1) <u>cannot</u> be simplified by dropping $a\epsilon_\theta$ as compared to $a^2\, \varkappa_\theta$. However, once (6.1) is introduced into (3.4), ϵ_θ <u>can</u> be neglected since (3.4) are stress-strain relations which, by Koiter's arguments, already neglect terms of the same type. Thus we may set

$$a^2 M_\xi = -\, D[W'' + \nu(W^{\cdot\cdot} + W)], \qquad a^2 M_\theta = -\, D[W^{\cdot\cdot} + W + \nu\, W''] \tag{6.2a,b}$$

Consider next N_ξ and N_θ. Equation (4.5b),

$$a^2\, N_\theta = F'' + a^3\, p\ , \tag{4.5b)'}$$

is adequate as is. By use of (4.6a), (4.5a) can be written

$$a^2 N_\xi = F^{\cdot\cdot} + F - aM_\xi + a^3 \int [\, \int (p^{\cdot\cdot} + p_\theta^{\cdot})\, d\xi - p_\xi]\, d\xi \tag{6.3}$$

If (6.2a) is introduced, (6.3) reads

$$a^2 N_\xi = F^{\cdot\cdot} + F + (D/a)\,[W'' + \nu(W^{\cdot\cdot} + W)]^{\cdot}$$

$$+ a^3 \int [\int (p^{\cdot\cdot} + p_\theta^{\cdot})\, d\,\xi - p_\xi]\, d\,\xi \qquad (6.4)$$

which is the desired form. It is important to emphasize that in (6.3) we <u>cannot</u> set $a^2 N_\xi + aM_\xi \approx a^2 N_\xi$ since (6.3) is <u>not</u> a stress-strain relation.

Consider next the moment-curvature relation for T:

$$T = D(1 - \nu)\tau \qquad (3.4f)'$$

Substitution of the exact equation for τ, (3.2c), into (3.4f) gives T in terms of U_ξ, U_θ, and W. Two simpler forms for T are possible. Using (3.3c), we can also write, to within negligible terms involving γ,

$$a^2 T = -(1-\nu)\, D(W^{\cdot} - U_\theta)' \quad \text{or} \quad a^2 T = -(1-\nu)\, D(W' + U_\xi)^{\cdot}, \qquad (6.5a,b)$$

but in no way is it possible to express T in terms of W alone. However, it is possible to express T' and $T^{\cdot}$ in terms of W alone. Since (3.4f) is a stress-strain relation we may add to τ the negligible term $-\frac{3}{2}\gamma/a$. Then, using the compatibility equation (4.1b), and (3.2a), we can write

$$a^2 T' \approx a^2 D(1 - \nu)\,(\tau - \underline{\tfrac{3}{2}\gamma/a})'$$

$$= a^2 D(1 - \nu)\,(\varkappa_\xi - \underline{\epsilon_\xi/a})^{\cdot}$$

$$\approx - D(1 - \nu)\, W'''^{\cdot} \qquad (6.6)$$

where, again, we have used the fact that (6.6) is a stress-strain relation to neglect the underlined term in the second line.

In an analogous way we can write, with the use of (4.1a) and (3.3b),

$$a^2T^{\cdot} \approx a^2D(1-\nu)\ (\tau + \underline{\tfrac{1}{2}\ \gamma/a})^{\cdot}$$

$$= a^2D(1-\nu)\ \varkappa_\theta'$$

$$\approx a^2D(1-\nu)(\varkappa_\theta - \underline{\epsilon_\theta/a})'$$

$$= -\ D(1-\nu)\ (W^{\cdot\cdot} + W)' \tag{6.7}$$

Note that if we substitute (6.2) and (6.6) into (5.1), we obtain a form of (5.7) corresponding to $\lambda = \nu$ whereas if we substitute (6.2) and (6.7) into (5.1), we get a form of (5.7) corresponding to $\lambda = 2-\nu$. Since λ can be any arbitrary $O(1)$ constant, this shows that the discrepancy between (6.6) and (6.7) (i.e., that $T^{\prime\cdot} \neq T^{\cdot\prime}$) is of no importance.

With (6.6) and (6.7) in hand, expressions for the remaining variable follow readily. From (3.12), (6.2), (6.5) and (6.6) we have,

$$a^3R_\xi = -\ D[W'' + (2-\nu)\ (W^{\cdot\cdot} + W)]' \tag{6.8}$$

$$a^3R_\theta = -\ D[W^{\cdot\cdot} + W + (2-\nu)\ W'']^{\cdot} \tag{6.9}$$

Consider next (4.5c), ignoring for the moment the load integrals:

$$a^2S = -\ F^{\prime\cdot} + \frac{3}{4}\ H_\theta' - \frac{1}{4}\ H_\xi^{\cdot} \qquad (4.5c)'$$

There is no way in which S may be expressed in terms of F and W alone, but several equivalent forms for S are possible, of which we note the following two. Using (4.6a) we can write, in place of (4.5c),

$$a^2S = \begin{cases} -(F^{\cdot} - H_\theta)' + \frac{1}{2}\ a\ T & (6.10a) \\ -(F' + H_\xi)^{\cdot} - \frac{3}{4}\ a\ T & (6.10b) \end{cases}$$

so that by substituting, respectively, (6.5a,b) for T into (6.10a,b), and restoring the load integral, we get either

$$a^2 S = -\left[F^{\cdot} - H_\theta + \tfrac{1}{2}(1-\nu)\,(D/a)\,(W^{\cdot}-U_\theta)\right]' - a^3 \int (p^{\cdot\cdot}+p_\theta^{\cdot})\, d\xi \qquad (6.11a)$$

or

$$a^2 S = -\left[F' + H_\xi - \tfrac{3}{4}(1-\nu)\,(D/a)\,(W'+U_\xi) - a^3 \int (p^{\cdot}+p_\theta)\, d\xi\right]^{\cdot} \qquad (6.11b)$$

It is possible, however, to express S' and $S^{\cdot}$ in terms of W, F, and load integrals alone. Using the reduced force equilibrium equations (3.1a,b), we first write

$$a^2 S^{\cdot} = -a^2 N_\xi' + \tfrac{1}{2}\, a\, T^{\cdot} - a^3\, p_\xi \qquad (6.12)$$

$$a^2 S' = -\left(a^2 N_\theta^{\cdot} + \tfrac{3}{2}\, a\, T' + a\, M_\theta^{\cdot} + a^3\, p_\xi\right), \qquad (6.13)$$

and then substitute for N_θ, M_θ, T' and $T^{\cdot}$ (4.5b), (6.2b), (6.4), (6.6), and (6.7). This gives

$$a^2 S^{\cdot} = -\left\{F^{\cdot\cdot}+F+(D/a)\left[W''+\tfrac{1}{2}(1+\nu)(W^{\cdot\cdot}+W)\right]\right\}' - a^3 \int (p^{\cdot\cdot}+p_\theta^{\cdot})\, d\xi \qquad (6.14)$$

and

$$a^2 S' = -\left\{F'' - (D/a)\left[W^{\cdot\cdot} + W + \underline{\tfrac{1}{2}(3-\nu)\, W''}\right]\right\}^{\cdot} - a^3 (p^{\cdot}+p_\theta)$$

$$\approx -\left[F'' - (D/a)\,(W^{\cdot\cdot} + W)\right]^{\cdot} - a^3 (p^{\cdot} + p_\theta) \qquad (6.15)$$

It is permissible to neglect the underlined term in (6.15) compared to F'' since (5.7) indicates that the solution for F'' will contain errors of $O(D/a\, W'')$.

The last stress variables to be considered are the effective Kirchhoff shear forces, S_ξ and S_θ. Undifferentiated expressions for S_ξ and S_θ in terms of W, F, and load integrals alone are not possible, but differentiated ones are. There follows from (3.1a), (3.9b), and (6.4)

$$a^2 S_\theta^{\cdot} = -a^2 N_\xi' - a^3 p_\xi \qquad (6.16)$$

$$= -\left\{F^{\cdot\cdot} + F + (D/a)\left[W'' + \nu\,(W^{\cdot\cdot} + W)\right]\right\}' - a^3 \int (p^{\cdot\cdot} + p_\theta^{\cdot})\, d\xi$$

and from (3.1b), (3.9a), (4.5b), and (6.2b)

$$a^2 S'_\xi = - a^2 N^\cdot_\theta - a M^\cdot_\theta - a^3 p_\theta$$

$$= - [F'' - (D/a)\ (W^{\cdot\cdot} + W + \underline{\nu W''})]^\cdot - a^3 (p^\cdot + p_\theta)$$

$$\approx - [F'' - (D/a)\ (W^{\cdot\cdot} + W)]^\cdot - a^3 (p^\cdot + p_\theta) \qquad (6.17)$$

where, as before, the underlined term may be neglected compared to F'' by virtue of (5.7). More useful for the statement of boundary conditions are expressions for $S^\cdot_\xi$ and S'_θ. From (4.7), (4.8), (6.8) and (6.9) there follows

$$a^2 S^\cdot_\xi = - F^{\cdot\cdot\cdot} - H^{\cdot\cdot}_\xi - a^3 \int (p^\cdot + p_\theta)^{\cdot\cdot}\, d\xi$$

$$= - (F^{\cdot\cdot} + F)' + a^2 R_\xi - a^3 \int (p^\cdot + p_\theta)^{\cdot\cdot}\, d\xi$$

$$= - \{F^{\cdot\cdot} + F + (D/a)\ [W'' + (2-\nu)\ (W^{\cdot\cdot} + W)]\ \}' - a^3 \int (p^\cdot + p_\theta)^{\cdot\cdot} d\xi \qquad (6.18)$$

$$a^2 S^\cdot_\theta = - F'''^\cdot + H''^\cdot_\theta - a^3 (p^\cdot + p_\theta)^\cdot$$

$$= - F'''^\cdot - a^2 R_\theta - a^3 (p^\cdot + p_\theta)^\cdot$$

$$= - \{F'' - (D/a)\ [W^{\cdot\cdot} + W + \underline{(2-\nu)\ W''}] + a^3 (p^\cdot + p_\theta)\}^\cdot$$

$$\approx - [F'' - (D/a)\ (W^{\cdot\cdot} + W) + a^3 (p^\cdot + p_\theta)]^\cdot \qquad (6.19)$$

where the underlined term in (6.19) can be neglected. We note, however, that for the purpose of expressing boundary conditions in terms of W and F, it may be simpler to use the exact expression for $S^\cdot_\theta$ given by the second line of (6.19).

It remains to obtain expressions for the tangential midsurface displacements U_ξ and U_θ. Undifferentiated forms for U_ξ and U_θ are not possible. Expressions for U_ξ' and $U_\theta^{\cdot}$ follow from (3.3a,b), (3.4a,c), (4.5b), and (6.3) as

$$U_\xi' = a\,\epsilon_\xi = a\,A(N_\xi - \nu\,N_\theta)$$

$$\approx a\,A(N_\xi + \underline{a^{-1}\,M_\xi} - \nu\,N_\theta)$$

$$= (A/a)\,(F^{\cdot\cdot} + F - \nu\,F'') + a^2 A\,\{\int[\int(p^{\cdot\cdot} + p_\theta^{\cdot})\,d\xi - p_\xi]\,d\xi - \nu p\} \tag{6.20}$$

$$U_\theta^{\cdot} = -W + a\,\epsilon_\theta = -W + a\,A(N_\theta - \nu\,N_\xi)$$

$$\approx -W + a\,A[N_\theta - \nu\,(N_\xi + \underline{a^{-1}\,M_\xi})]$$

$$= -W + (A/a)[F'' - \nu(F^{\cdot\cdot} + F)] + a^2 A\,\{p - \nu\,[\int(p^{\cdot\cdot} + p_\theta^{\cdot})d\xi - p_\xi]d\xi\} \tag{6.21}$$

when obviously negligible terms have been added in the second lines of (6.20) and (6.21).

Displacement boundary conditions for U_ξ or U_θ along an edge ξ = constant or θ = constant, respectively, may often be simplified by expressing them in terms of $U_\xi^{\cdot\cdot}$ or U_θ''. For $U_\xi^{\cdot\cdot}$ we have

$$U_\xi^{\cdot\cdot} = 2\,a\,\gamma^{\cdot} - U_\theta''^{\cdot} \quad , \text{ by (3.3c)}$$

$$= W' + 2\,a\,\gamma^{\cdot} - a\,\epsilon_\theta', \quad \text{by (3.3b)}$$

$$= W' - a\,A[N_\theta' - \nu\,N_\xi' - 2(1+\nu)\,S^{\cdot}], \quad \text{by (3.4c,e)}$$

$$\approx W' - a\,A[N_\theta' - \nu\,N_\xi' - 2(1+\nu)\,(S - \underline{\tfrac{1}{2}\,T/a})^{\cdot}]$$

$$= W' - a\,A\,[N_\theta + (2+\nu)\,N_\xi]' - 2(1+\nu)\,a^2 A\,p_\xi, \quad \text{by (3.1a)}$$

$$\approx W' - a\,A\,[N_\theta + (2+\nu)\,(N_\xi + \underline{M_\xi/a})]' - 2(1+\nu)\,a^2 A\,p_\xi$$

$$= W' - (A/a)\,[F'' + (2+\nu)\,(F^{\cdot\cdot} + F)]'$$

$$- a^2 A\,[p' + p_\xi + (2+\nu)\int (p^{\cdot\cdot} + p_\theta^{\cdot})\,d\xi]\,, \qquad (6.22)$$

by (4.5b) and (6.3). A similar set of substitutions and approximations yields as the final expression for U_θ'',

$$U_\theta'' = -(A/a)\,[(2+\nu)\,F'' + F^{\cdot\cdot} + F]^{\cdot}$$

$$- a^2 A\,\{(2+\nu)\,p^{\cdot} + 2(1+\nu)\,p_\theta + \int [\int (p^{\cdot\cdot} + p_\theta^{\cdot})\,d\xi - p_\xi]^{\cdot}\,d\xi\} \qquad (6.23)$$

7. SUMMARY OF EQUATIONS

Below, we summarize the simplified equations derived in sections 5 and 6. An "approximately equals" sign, $\approx$, has been used in those equations which, because they involve stress-strain relations, are not exact.

Basic Equation

$$\nabla^4 \Psi + \Psi^{\cdot\cdot} + \lambda\,\Psi'' - i2\mu^2\,\Psi''$$

$$\approx -i2\mu^2 a^2 A\,[\nabla^4 (\iint p\,d\xi\,d\xi) + \nu p_\xi' - \int p_\xi^{\cdot\cdot}\,d\xi + (2+\nu)\,p_\theta^{\cdot} + \iint p_\theta^{\cdot\cdot\cdot}\,d\xi\,d\xi] \qquad (7.1)$$

$$\Psi = W + i\sqrt{A/D}\,F \qquad \mu^4 = 3(1-\nu^2)\,(a/h)^2 \qquad (7.2a,b)$$

λ = arbitrary, 0(1) constant.

Auxiliary Equations

Stress Resultants

$$a^2 N_\xi \approx F^{\cdot\cdot} + F + (D/a)\,[W'' + \nu(W^{\cdot\cdot}+W)]'$$

$$+ a^3 \int [\int (p^{\cdot\cdot}+p_\theta^{\cdot})\, d\xi - p_\xi]^{\cdot} d\xi \qquad (7.3)$$

$$a^2 N_\theta = F'' + a^3 p \qquad (7.4)$$

$$a^2 S' \approx - [F'' - (D/a)(W^{\cdot\cdot} + W)]^{\cdot} - a^3 (p^{\cdot} + p_\theta) \qquad (7.5a)$$

$$a^2 S^{\cdot} \approx - \{F^{\cdot\cdot}+F+(D/a)[W''+\tfrac{1}{2}(1+\nu)(W^{\cdot\cdot}+W)]\}' - a^3 \int (p^{\cdot}+p_\theta)^{\cdot} d\xi \qquad (7.5b)$$

Stress Couples

$$a^2 M_\xi \approx - D[W'' + \nu\,(W^{\cdot\cdot} + W)] \qquad (7.6)$$

$$a^2 M_\theta \approx - D(W^{\cdot\cdot} + W + \nu\, W'') \qquad (7.7)$$

$$a^2 T' \approx - (1-\nu)\, W'^{\cdot} \quad , \quad a^2 T^{\cdot} \approx - (1-\nu)\,(W^{\cdot\cdot} + W)' \qquad (7.8a,b)$$

Effective Kirchhoff Edge Forces

$$a^2 S_\xi = - (F' + H_\xi)^{\cdot} - a^3 \int (p^{\cdot} + p_\theta)\, d\,\xi \qquad (7.9a)$$

$$a^2 S_\xi^{\cdot} = - (F^{\cdot\cdot} + F)' + a^2 R_\xi - a^3 \int (p^{\cdot} + p_\theta)^{\cdot}\, d\,\xi$$

$$\approx - \{F^{\cdot\cdot} + F + (D/a)[W''+(2-\nu)(W^{\cdot\cdot}+W)]\}' - a^3 \int (p^{\cdot}+p_\theta)^{\cdot} d\xi \qquad (7.9b)$$

$$a^2 S_\theta = -(F^{\cdot} - H_\theta)' - a^3 \int (p^{\cdot} + p_\theta)\, d\xi \tag{7.10a}$$

$$a^2 S'_\theta = -F'''^{\cdot} - a^2 R_\theta - a^3 (p^{\cdot} + p_\theta)$$

$$\approx -[F''^{\cdot} - (D/a)(W^{\cdot\cdot} + W)]^{\cdot} - a^3 (p^{\cdot} + p_\theta) \tag{7.10b}$$

$$a^3 R_\xi \approx -D[W'' + (2-\nu)(W^{\cdot\cdot} + W)]' \tag{7.11}$$

$$a^3 R_\theta \approx -D[W^{\cdot\cdot} + W + (2-\nu)\, W'']^{\cdot} \tag{7.12}$$

Tangential Displacements

$$U'_\xi \approx (A/a)(F^{\cdot\cdot} + F - \nu F'') + a^2 A\{ \int [\int (p^{\cdot\cdot} + p^{\cdot}_\theta)\, d\xi - p_\xi]\, d\xi - \nu p\} \tag{7.13a}$$

$$U^{\cdot}_\xi \approx W' - (A/a)\, [F'' + (2+\nu)\, (F^{\cdot\cdot} + F)]'$$

$$-a^2 A[p' + p_\xi + (2+\nu) \int (p^{\cdot\cdot} + p^{\cdot}_\theta)\, d\xi] \tag{7.13b}$$

$$U^{\cdot}_\theta \approx -W + (A/a)[F'' - \nu(F^{\cdot\cdot} + F)] + a^2 A\{p - \nu \int [\int (p^{\cdot\cdot} + p^{\cdot}_\theta) d\xi - p_\xi] d\xi\} \tag{7.14a}$$

$$U''_\theta \approx -(A/a)\, [(2+\nu)\, F'' + F^{\cdot\cdot} + F]^{\cdot}$$

$$-a^2 A\{(2+\nu)p^{\cdot} + 2(1+\nu)p_\theta + \int [\int (p^{\cdot\cdot} + p^{\cdot}_\theta) d\xi - p_\xi]^{\cdot}\, d\xi\} \tag{7.14b}$$

8. AN EXAMPLE OF THE INADEQUACY OF THE EXTENDED DONNELL EQUATION

Consider a horizontally cantilevered circular cylindrical shell, built in at the end $\xi = 0$ and welded to a rigid insert at the end $\xi = \ell = L/a$ (Figure 2). Let the vertical displacement of the insert be

denoted by Δ and its rotation about a horizontal line by Φ.

The displacement boundary conditions of the shell are, at $\xi = 0$,

$$U_\xi = U_\theta = W = W' = 0 \tag{8.1}$$

and at $\xi = \ell$,

$$U_\xi = -a\,\Phi\cos\theta;\quad U_\theta = -\Delta\sin\theta,\quad W = \Delta\cos\theta,\quad W' = a\,\Phi\cos\theta \tag{8.2}$$

Since the first two of (8.1) imply that $U_\xi^{\cdot\cdot} = U_\theta^{\cdot} = 0$, and the first two of (8.2) that $U_\xi^{\cdot\cdot} = a\,\Phi\cos\theta$, $U_\theta^{\cdot} = -\Delta\cos\theta$, we may, with the aid of (7.13b) and (7.14a), express the boundary conditions in terms of W and F as follows:

at $\xi = 0$,

$$[F''+(2+\nu)(F^{\cdot\cdot}+F)]' = F''-\nu(F^{\cdot\cdot}+F) = W = W' = 0 \tag{8.3}$$

at $\xi = \ell$,

$$[F''+(2+\nu)(F^{\cdot\cdot}+F)]' = F''-\nu(F^{\cdot\cdot}+F) = 0$$

$$W = \Delta\cos\theta,\qquad W' = a\,\Phi\cos\theta \tag{8.4}$$

To simplify things, we shall set $\nu = 0$ and assume that the only external load is a bending moment of magnitude M applied to the insert and acting about a horizontal axis*. Furthermore, we shall take $\lambda = 2$ in (7.1). Under these conditions one easily checks by direct substitution that the expressions

$$W = \frac{M\ell^2}{2\pi aEh}\cos\theta\,,\qquad F = -\frac{M}{2\pi}\,\theta\sin\theta \tag{8.5a,b}$$

satisfy the basic differential equation (7.1), all the boundary conditions (8.3), and the first two boundary conditions (8.4).

---

*These two simplifications preclude the existence of boundary layers at $\xi = 0$ and $\xi = \ell$.

The last two boundary conditions (8.4) give the following relations between the displacement and rotation of the insert and the applied moment:

$$\Delta = \frac{ML^2}{2EI} \quad , \quad \Phi = \frac{ML}{EI} \tag{8.6}$$

where $I = \pi a^3 h$ is the moment of inertia about a horizontal diameter. Equations (8.6) agree exactly with the well-known results of elementary beam theory [21, p. 182].

Consider now the solution for W predicted by the extended Donnell equation, (2.10). With

$$W = w(\xi) \cos \theta \tag{8.7}$$

(2.10) reduces to

$$w'''''''' - 4w'''''' + 6w'''' - 4w'' + 4\mu^4 w'''' = 0 \tag{8.8}$$

We assume, as found in the above analysis, that no boundary layers are present in the solution for w, i.e., that differentiation does not increase orders of magnitude. Then, since $\mu^4 >> 1$, we are tempted to replace (8.8) by the simpler equation

$$w'''' = 0 \tag{8.9}$$

which, it can be shown*, leads back to (8.5a).

The replacement of (8.8) by (8.9) is valid providing $\ell << \mu^2$, i.e., providing that the shell is not "too long". However, if $\ell \gtrsim \mu^2$, the influence of the w'' - term in (8.8) can no longer be neglected. Accordingly, we now match the last two terms in (8.8) by introducing the scaled variable,

$$\eta = \xi/\mu^2 \tag{8.10}$$

---

*Even though the solution of (8.9) contains only 4 arbitrary constants, it is nevertheless possible, for ν=0 and the assumed type of loading, to satisfy all eight of the boundary conditions (8.3) and (8.4).

so that (8.8) assumes the form

$$\frac{d^4w}{d\eta^4} - \frac{d^2w}{d\eta^2} + \frac{3}{2\mu^4}\frac{d^4w}{d\eta^4} + \ldots = 0 \tag{8.11}$$

The solution of (8.11) may be written

$$w = a_o + a_1\eta + a_2 \cosh\eta + a_3 \sinh\eta + O(\mu^{-4}) \tag{8.12}$$

where the error estimate $O(\mu^{-4})$ is uniformly valid over the entire range $0 \leq \eta < \infty$.

If we regard the moment M as given and the displacement and rotation Δ and δ to be determined, then by the conditions of overall force and moment equilibrium of the shell, it may be shown that the last two displacement boundary conditions (8.4) at $\xi = \ell$ can be replaced by the following boundary conditions at $\xi = 0$.

$$W'' = \frac{M}{\pi aEh}, \qquad W''' = 0 \tag{8.13}$$

Denoting the right hand side of (8.12), less the $O(\mu^{-4})$ term, by w_D, and fitting w_D to the last two of (8.3) and (8.13), we obtain

$$w_D = \frac{M\mu^4}{\pi aEh}(\cosh\eta - 1) \tag{8.14}$$

which gives for the vertical displacement of the insert

$$\Delta_D = \frac{M\mu^4}{\pi aEh}\left[\cosh\left(\frac{L}{a\mu^2}\right) - 1\right] \tag{8.15}$$

The shortcoming of (8.15) is apparent, for as the length L of the shell increases without limit (for fixed $a\mu^2$), the difference in end deflection predicted by the extended Donnell equation and that predicted by elementary beam theory, (8.6), increases without limit.

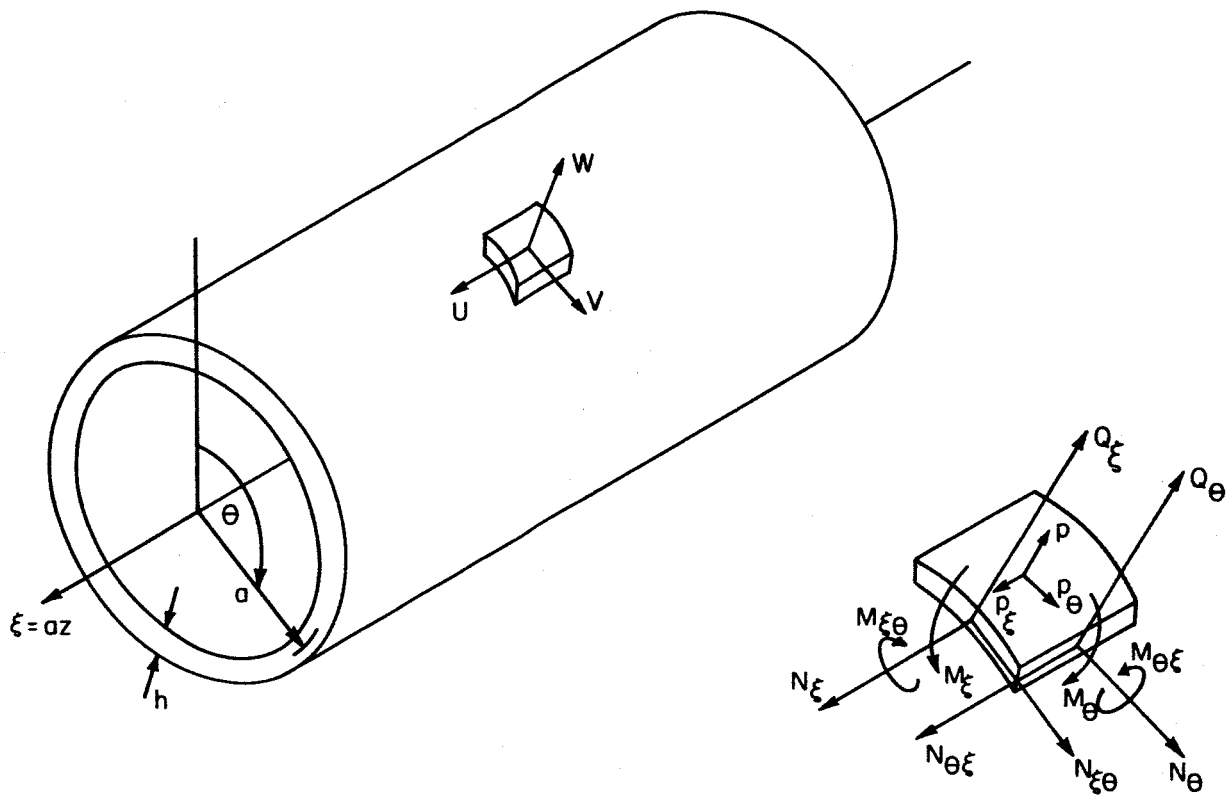

FIG. 1 GEOMETRICAL AND STRESS CONVENTIONS

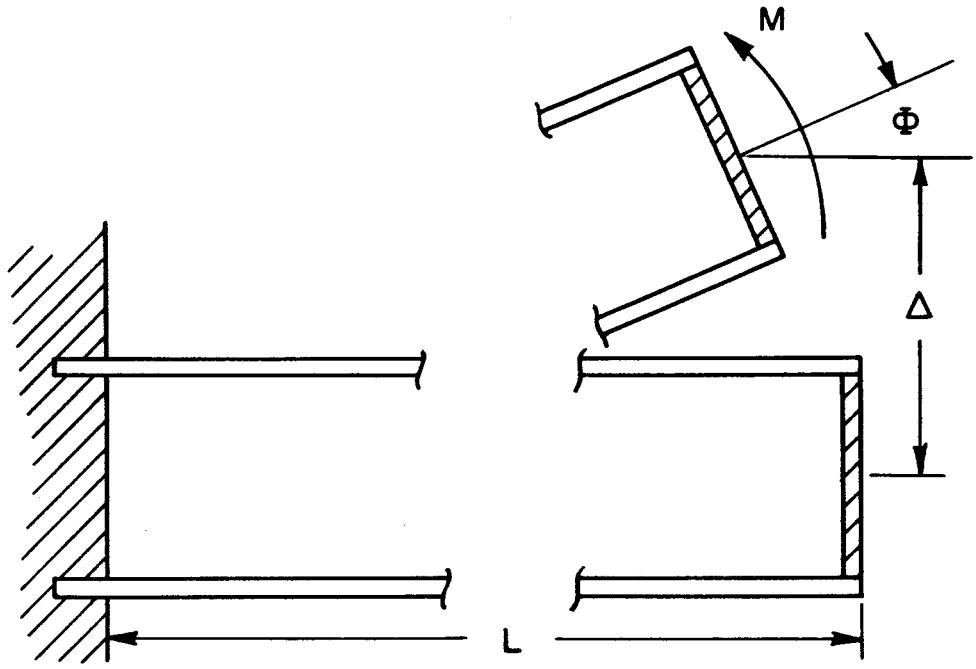

FIG. 2 BEAM-LIKE BENDING OF THE SHELL

References

1. V. V. Novozhilov, The Theory of Thin Shells, Trans. P. G. Lowe, Ed. J. R. M. Radok, P. Noordhoff, The Netherlands, 1959.

2. W. T. Koiter, "A Consistent First Approximation in the General Theory of Elastic Shells", Proceedings of the Symposium in the Theory of Thin Elastic Shells, Delft, 1959, Ed. W. T. Koter, North Holland Publishing Co., Amsterdam.

3. J. L. Sanders, Jr., "An Improved First-Approximation Theory for Thin Shells", NASA Report 24, 1959.

4. B. Budiansky and J. L. Sanders, Jr., "On the 'Best' First-Order Linear Shell Theory", Div. of Eng. and Appl. Phys., Harvard Univ. Report No. 14, Sept., 1962; Also, Progress in Applied Mechanics, Macmillan Co., 1963.

5. A. E. H. Love, A Treatise on the Mathematical Theory of Elasticity, 3rd. Ed., Cambridge Univ. Press, 1920.

6. A. E. H. Love, A Treatise on the Mathematical Theory of Elasticity, 4th. Ed., Dover Publications, 1944.

7. W. Flügge, "Die Stabilität der Kreiszylinderschale", Ing. - Arch., Vol. 3 (1932), pp. 463-506.

8. W. Flügge, Stresses in Shells, Springer-Verlag, Berlin, 1960, Chapt. 5.

9. S. Timoshenko and S. Woinowsky-Krieger, Theory of Plates and Shells, 2nd. Edition, McGraw-Hill, New York, 1959, pp. 507-532.

10. V. Vlasov, General Theory of Shells and Its Application in Engineering, NASA T T F-99, 1964; translation of Obschchaya teoriya obolochek i yeye prilozheniya v tekhnike,

11. A. L. Goldenveizer, Theory of Elastic Thin Shells, Pergamon Press, 1961.

12. L. H. Donnell, "Stability of Thin-walled Tubes Under Torsion", NACA TR 479 (1933)

13. L. H. Donnell,"A Discussion of Thin Shell Theory", Proc. Fifth Int. Cong. for Appl. Mech., 1938, pp. 66-70.

14. E. Reissner, "On Torsion of Thin Cylindrical Shells", J. Mech. and Phys. of Solids, Vol. 7, (1959), pp. 157-162.

15. E. Reissner, "On the Form of Variationally Derived Shell Equations", J. of Appl. Mech., Vol. 31, pp. 233-238, Trans. A.S.M.E., Ser. E (1964).

16. F. B. Hildebrand, E. Reissner, G. B. Thomas, "Notes on the Foundation of the Theory of Small Displacements of Orthotropic Shells", NACA TN 1833 (1949)

17. L. S. D. Morley, "An Improvement on Donnell's Approximation for Thin-Walled Circular Cylinders", Q. J. Mech. Appl. Math., Vol. 12 (1959), pp. 89-99.

18. K. Marguerre, "Zur Theorie der Gekrümmten Platte Grosser Formänderung", Proc. 5th. Int. Cong. Appl. Mech., Wiley and Sons, 1938, pp. 93-101.

19. J. G. Simmonds, "Influence Coefficients for Semi-infinite and Infinite Circular Cylindrical Shells", to appear.

20. S. Lukasiewicz, "Uzupelnienie Rownan Technicznej Teorii Powlok", Rozprawy Inzynierskie, Vol. 11 (1963), pp. 145-163.

21. S. Timoshenko and G. H. Mac Culloch, Elements of Strength of Materials, 3rd. Ed., D. Van Nostrand, New York, 1949.