https://ntrs.nasa.gov/search.jsp?R=19660007424 2018-07-26T04:55:45+00:00Z

The Auroral Oval, the Auroral Substorm, and Their Relations with the Internal Structure of the Magnetosphere*

by

Syun-Ichi Akasofu**

November 1965

*Research supported in part by grants from the National Aeronautics and Space Administration (NsG 201-62 and NsG 233-62) and the National Science Foundation (GP 2721).

**Geophysical Institute, University of Alaska, College, Alaska.

ABSTRACT

16713

If the neutral sheet is the source region of auroral particles, as suggested by Piddington, they flow in a thin layer just outside the outer boundary of the trapping region from the neutral sheet towards the earth and produce an oval-shape glow on the polar ionosphere, which we identify here as the auroral oval.

This suggests that large-scale changes of the internal structure of the magnetosphere can be inferred from the changing auroral oval. In fact, the auroral oval shows two major changes during geomagnetic storms, the expansion of the oval as a whole (the equatorward shift), and transient and repeated expansions and subsequent contractions of the width of the oval belt, particularly in the midnight sector (the auroral substorm).

It is shown that the equatorward shift of the oval can reasonably be explained by the change of the internal structure of the magnetosphere resulting from the growth of the ring current and the neutral sheet current. The interaction of these two systems delimits the boundary between the trapping region and the tail region of the magnetosphere in the dark side.

Over

An attempt is also made to explain the major feature of the auroral substorm as a manifestation of transient imbalance of the two current systems. If a sudden decrease of the neutral sheet current occurs, this process closes some of the field lines which had been opened previously by the two systems, first the field line closest to the outer boundary of the trapping region and then those which anchor in higher latitudes. It is suggested that this is manifested by the explosive phase of the auroral substorm during which active auroral bands move rapidly polewards. As soon as the neutral sheet current begins to resume its intensity, the opposite process takes place and the recovery phase starts; auroras begin to move toward their initial location.

The law of the conservation of the absolute angular momentum suggests that the hot plasma flowing toward the ionosphere along the outer boundary of the trapping region acquires a greater eastward speed than that of the earth's rotation. The dynamical interaction between this eastward flow of the magnetospheric plasma and the neutral atmosphere underneath generates the polar electrojet along the auroral oval.

Author

1. Introduction

Recent studies of the auroral substorm and the polar electrojet have revealed that these two fundamental polar phenomena are a manifestation of interactions between the magnetospheric plasma near the outer boundary of the outer radiation belt and the neutral atmosphere underneath. Two kinds of interaction, dynamical and atomic, occur in a narrow belt along the intersection curve between the outer boundary of the outer belt (or more precisely, the trapping region) and the ionosphere. This belt has an oval shape and its center is located a few degrees away from the dipole pole toward the dark hemisphere, and is called the auroral oval;[1] Fig. 1 shows schematically the noon-midnight cross-section of the magnetosphere and the auroral oval. Both interactions occur most violently in the E-region of the ionosphere which is a rather thin transition region between the magnetospheric plasma and the neutral atmosphere. There, an intense polar electrojet flows, and a significant portion of the auroral light is produced.

During geomagnetic storms, the auroral oval undergoes two basic types of change. The first is the enlargement of the oval as a whole, and both the poleward and equatorward boundaries of

the oval belt shift equatorwards (§ 2 (b)). The second is repeated expansions and subsequent contractions of the width of the oval, particularly in the midnight sector (§ 2 (c)).

Undoubtedly, such changes of the oval are a manifestation of large-scale changes of the internal structure of the magnetosphere. In § 4, an attempt is made to try to infer the changes of the internal structure of the magnetosphere and resulting changes of the auroral oval as an interaction between the ring current and the neutral sheet. The existence of the neutral sheet was predicted by Piddington[2] in 1960 and subsequently confirmed by Ness.[3] The formation of the tail was further discussed by Axford, Petschek, and Siscoe.[4] The existence of the ring current has not yet definitely been confirmed. However, Cahill and Bailey[5] have found a significant <u>positive</u> change of the geomagnetic field at about the geocentric distance of $r_e = 3a$ (a = the earth's radius), when a large decrease of the horizontal component was observed on the earth's surface: This indicates the existence of a ring current-like current system within $r_e = 3a$. Further, Behannon and Ness[6] have shown that the main phase decrease on the ground cannot simply be explained by the neutral sheet current.

The interaction of the two current systems opens closed geomagnetic field lines or closes open field lines. Here, the terms 'open' and 'close' are used as defined by Piddington.[2,7,8] The 'closed' field lines are those that cross the equatorial plane in the trapping region of the magnetosphere, and the 'opened' field lines are those that close in the magnetospheric tail or may be connected to interplanetary magnetic fields. Therefore, the interaction may be expressed in terms of a kind of 'switch' which opens or closes the geomagnetic field lines. The interaction between the solar plasma flow and the ring current acts also as the 'switch'.[9,10] In this paper, the interaction between the solar plasma flow (F) and the ring current (R) is called the F-R interaction (§ 3) and the interaction between the neutral sheet (N) and the ring current (R) is called the N-R interaction (§ 4).

We begin with a somewhat detailed description of the concept of the auroral oval and then discuss the auroral and the polar magnetic storms. This is because the basic features of the auroral substorm and the polar magnetic substorm can be understood most clearly by introducing a natural frame of reference, the auroral oval, to which all the major polar geophysical phenomena

can be referred. As we shall see shortly, this frame of reference changes its size (or roughly the 'diameter') and the eccentricity (or the location of its center with respect to the dipole pole). However, it is useful to first examine the oval at its average location.

2. The Auroral Substorm and Polar Magnetic Substorm

(a) The Oval at Its Average Location

The average location of the oval obtained by Feldstein[11] is shown in Fig. 2. Khorosheva[12] has confirmed that at a particular instant, auroras tend to lie along the oval. Roughly speaking, the oval is fixed with respect to the sun, and the earth rotates under the oval. Here, the difference between the auroral oval and the auroral zone should be clearly recognized. The auroral zone (which is approximately the dipole latitude circle of 67°) is simply the locus of the midnight point of the oval, where active auroras are most frequently seen. In other words, an auroral zone station does not have any uniqueness, except when it is located in the midnight sector. In the other sectors, the oval lies inside the auroral zone.

That an auroral zone station does not have any uniqueness except in the midnight sector, can also be seen from the fact that at an auroral zone station, like College (Alaska), the sky is dark enough to see auroras at 18 LT in midwinter, but they are seldom seen at this local time except during great magnetic storms;

active auroras are seen to the poleward side of the auroral zone (dp lat 70° ~ 75°), a little north of Point Barrow (Alaska), at this time.

The aurora has also long been thought to be essentially a nighttime phenomenon, but it is rather a daytime phenomenon at dipole (dp) latitude (lat) 75° ~ 80°, since the oval is, on the average, located at such a latitude in the midday sector.[11,12] This concept of the auroral oval has been established by a combined effort of a number of workers; among them are Feldstein,[11] Khorosheva,[12] Malville,[13] Davis,[14] Sandford,[15] and Lassen.[16]

Figure 2 shows also the iso-intensity contour of the flux = ($10^4/cm^2$ sec) of trapped electrons of energies greater than 40 keV, obtained by Frank, Van Allen, and Craven.[17] Since the flux of the electron decreases rapidly to the poleward side of this contour, this contour should lie close to the intersection line between the ionosphere and the outer boundary of the outer radiation belt (or the trapping region). Their agreement is remarkable and must provide an important clue to understand auroral phenomena. In fact, we propose here that the auroral oval is a belt which lies just to the poleward side of the intersection

curve between the trapping region and the ionosphere and thus is directly connected to the neutral sheet; see Figure 1. This has already been suggested by Piddington.[29] Obviously, however, such a conjecture cannot be justified from Figure 2 which is a combination of the two rough statistical results. It should be noted in this connection, however, that Fritz and Gurnett[18] have observed intense fluxes of low energy (auroral) electrons just outside the outer boundary of the trapping region.

It can be seen from Figures 1 and 2 that the eccentricity of the oval (with respect to the dipole pole) is a manifestation of the remarkable day-night asymmetry of the trapping region.

(b) Changing Auroral Oval

An auroral zone station, like College (dp lat 65°) or Kiruna, can be outside, within, or inside the oval in the midnight sector, depending on the overall condition of the magnetosphere.

When the sun is very quiet, the oval contracts to dipole co-latitude 15° or less in the midnight sector and becomes very faint or even invisible.[19,20] Therefore, College becomes temporarily a subauroral zone station,[21] and both the auroral

behavior and polar magnetic substorm show characteristics which are similar to those at Sitka (dp lat 60°).

Akasofu[19] has also shown that even weak geomagnetic activity ($\sum K_p \simeq 10$) is, however, associated with the expansion of the oval from its quiet time location to its average location, so that its midnight radius increases to dp co-lat 23° (that of the auroral zone) in the midnight sector. During fairly quiet periods, the oval undergoes a continuous change of its size between the above two locations.[21]

During an intense geomagnetic storm, the oval expands greatly, at times as far as dipole co-lat 40° or dp lat 50° during extremely intense storms. On such an occasion the auroral behavior at College is essentially the same as that in the polar cap.[22,23] Akasofu and Chapman[24] have shown that the dp lat of the midnight portion of the oval depends on the magnitude of the main phase decrease (the Dst values); their diagram is reproduced here as Fig. 3.

Therefore, when a new geomagnetic storm breaks out after a reasonably quiet period, as the storm progresses an auroral zone station experiences all these complicated situations with respect to the oval. For example, it was at one time a great puzzle to

some people in the auroral zone to see the breakdown of the excellent correlation between locak K indices and auroral activity for very large K values; when the oval descends as far as dipole latitude 50°, the auroral zone in the midnight sector may temporarily be completely deserted.[23]

Another interesting feature of the aurora during great magnetic storms is its abnormally early appearance in the evening sky. As mentioned already, during the period of a medium disturbance auroras are seldom seen at 18 LT at dp lat 65°, although they may be quite active at dp lat 70° ~ 75°. During great magnetic storms the oval expands equatorward so that the usual region of auroral activity at this local time (70° ~ 75°) can be shifted to dp lat 65°. Akasofu and Chapman[23] have shown that this is not the equatorward expansion of the equatorward boundary of the oval, but both the poleward and equatorward boundaries of the oval belt shift equatorwards; for details see also Akasofu.[25]

Therefore, in the polar region, the location of a particular point with respect to this continuously changing oval (namely, outside, within, and inside the oval) is more meaningful than the dipole latitude (the location with respect to the dipole pole) in

order to understand complicated behaviors of the aurora and also other polar geophysical phenomena. This is the reason for proposing the auroral oval to be the natural frame of reference. From this view point, the polar cap should be defined as the region inside the auroral oval (rather than inside the auroral zone), and its area expands or contracts, depending on the overall situation in the magnetosphere. It is known that the area of the polar cap absorption (PCA) expands equatorwards during geomagnetic storms with a significant main phase.[9,10]

A drastic equatorward shift of the outer boundary of the outer radiation belt during intense magnetic storms was first observed by Maehlum and O'Brien.[26] They showed that the outer belt tends to be 'squashed' toward the equatorial plane, so that the intersection curve between the outer boundary of the belt and the ionosphere should shift toward the equator. Since then a large number of observations have been made, particularly by Williams and Palmer[27] and Ness and Williams.[28] Williams and Palmer[27] showed that the day-night asymmetry of the outer belt (electrons of energies greater than 40 keV) becomes more obvious as the K_p index is increased. Since these two facts are essentially what we expect from the changing oval, they may be taken to be an important

supporting evidence to identify the auroral oval as a belt lying close to the intersection curve.

In a recent paper, Piddington[29] has shown that the polar region can be divided into three characteristic regions, Zone I, II, and III. His Zone II coincides with the average location of the auroral oval. According to the view presented here, his Zone I appears when the auroral oval expands towards the equator, so that Zones I and III do not exist simultaneously. His Zone II corresponds to the region encircled by the auroral oval (namely, the polar cap defined in this paper), and thus it also expands or contracts, depending on the over-all condition in the magnetosphere.

(c) The Auroral Substorm

In addition to the changes in its size and eccentricity, the oval belt rapidly repeats expansions and subsequent contractions of its width, particularly in the dark sector. The expansion and the contraction occurs during the expansive phase and the recovery phase of the auroral substorm, respectively.

In the midnight sector, during the expansive phase, quiet auroral arcs lying in the narrow oval become bright first and

advance rapidly polewards, resulting in an explosive expansion of the oval width.[25,30] This initiates a planetary-scale activity of auroras that lie in the other sector of the oval. In the evening sector of the oval, a surge-type motion of auroras (the westward traveling surge) is generated by the expansion which travels along pre-existing arcs, namely along the oval towards the evening sector and sometimes to as far as the afternoon sector. Figure 4 shows schematically the oval during a quiet period between two auroral substorms and also the oval during the maximum epoch of the auroral substorm. (Since the surge travels along the oval, it cannot be seen in the auroral zone in the early evening sector or in the late afternoon sector, but it is a common feature at about dp lat 70° ~ 75° at this local time. An exception occurs during great magnetic storms when the oval descends to dp lat 65°.)[31]

In the morning sector, particularly to the equatorward side of the oval, arcs disintegrate into patches, and the resulting patches drift rapidly eastward.[25,30,32] In this way, the whole auroral system in the oval is progressively activated from its midnight portion.

When the poleward motion of active bands is halted, they start to move back toward their initial location; the recovery phase of the auroral substorm then begins. Both the surge in the evening sector and the eastward drift motion of patches in the morning sector are still progressing at this stage. Eventually, however, the whole auroral system will return to its pre-substorm condition or nearly so. The first expansive phase occurs in an explosive manner and lasts only for 5 ~ 30 minutes, but the recovery phase progresses much more slowly and lasts for 1 ~ 3 hours. The lifetime of this transient phenomenon, the auroral substorm, is of order 1 ~ 3 hours. It is important to note that the first indication of the auroral substorm is a sudden brightening of one of quiet arcs that lies in the midnight sector of the oval and that it is manifested by the expansion and the subsequent contraction of the oval. In other words, it is a process in the oval itself and there is no indication that the substorm activity is preceded by auroral activity over the polar cap.

(d) The Polar Electrojet and Polar Magnetic Substorm

Akasofu, Chapman, and Meng[1] have shown recently that the strong westward electric current, the polar electrojet, flows

along the auroral oval during the auroral substorm (see Fig. 4), causing the polar magnetic substorm or the so-called 'negative bay'. Since auroral substorms occur intermittently or sporadically, negative bays appear also in the same way. Until recently it was believed that there existed a pair of electrojets, the eastward jet (causing a positive bay) and the westward jet (causing a negative bay), located in the afternoon sector and the forenoon sector of the auroral zone, respectively.[33,34,35] However, they showed that the eastward jet in the afternoon sector is an eastward return current and is not a 'genuine' jet. In the evening sector, the polar jet flows along the auroral oval (not along the auroral zone) and impels a return current to the equatorward side of the oval, namely the auroral zone and the mid-low latitude zone. This can be understood from the fact that an auroral zone station has no uniqueness, except it is located in the midnight sector; since the major polar geophysical phenomena take place along the oval, there is no reason to expect any significant polar phenomena, such as an electrojet, to occur in the afternoon sector of the auroral zone; positive bays are observed in the auroral zone when westward traveling surges are propagating near the poleward horizon.[31] However, during intense geomagnetic storms, the oval descends

to dp lat 65° in the afternoon sector, so that an abnormally early appearance of the polar jet (as well as of the aurora) is seen over the auroral zone in the evening, causing negative bays, rather than positive bays.

Both Axford and Hines[49] and Piddington[29] have proposed that geomagnetic field lines are convected from the day sector to the night sector along the noon-midnight meridian and that they are then diverted eastward and westward along the auroral zone. They argue that such a convective motion of the field lines is manifested by auroral motions (the equatorward motion in the midnight sector, the westward motion in the evening sector, and the eastward motion in the morning sector) and by the direction of the two polar electrojets. They argue further that an enhancement of the convective motion causes the polar electrojet. However, Akasofu, Kimball, and Meng[41] have shown that the equatorward motion of the aurora in the midnight sector occurs as an after effect of the poleward motion of the aurora during the explosive phase of the substorm: In other words, the polar electrojet grows rapidly during the poleward motion of auroras and begins to subside when the auroras start to move back (equatorward) towards their initial location. The explosive phase is a short-life phenomenon,

but the recovery phase undergoes much more slowly and lasts for 1 ~ 3 hours, so that in a statistical study the equatorward motion may appear as if it is the most predominant motion. (For further details, see Akasofu, Kimball, and Meng.[41]) Therefore, the convective motion proposed by Axford and Hines[49] and Piddington[29] does not seem to be justified for the explanation of the auroral and polar magnetic substorms. Further, a part of their argument is based on the SD (or SD-like) current system which is now found to be incorrect.[1]

3. The F-R Interaction

The F-R interaction has already been discussed in detail by Akasofu[9] and Akasofu, Lin, and Van Allen[10] in connection with the abnormal entry of solar protons over the polar cap, and also with the deformation of the outer radiation belt during the main phase of geomagnetic storms. The solar plasma itself can open or close the field lines in the day sector but it is a very inefficient one; Mead[36] has shown that even for so large a change of the plasma pressure as to push the magnetospheric boundary from 15a (a = the earth radius) to 5a, the plasma can only open the field lines that 'anchor' between dp lat 81° and 83°.

4. The N-R Interaction

(a) The N-R Interaction and the Expansion of the Oval

The ring current tends to stretch the field lines that cross the equatorial plane outside the ring, increasing their equatorial crossing distance r_e.[9,37,38] The field line whose r_e value is 2.84a (a = the earth's radius) can be stretched by a combined effect of the ring current of intensity R = 300 γ and the neutral sheet of intensity N = 50 γ to about r_e = 11a. At r_e = 2.84a, the undisturbed geomagnetic field intensity is of order 1400 γ, but at the new equatorial crossing point (r_e = 11a) it is only of order 50 γ. Thus, a field line that is not likely to be opened by the neutral sheet alone at its original crossing point could be opened by the neutral sheet of intensity 50 γ after it is stretched out to r_e = 11a.

In Fig. 5, the minimum anchoring latitudes of the field lines which are opened by the N-R interaction are shown as a function of the ring current intensity R, taking the intensity of the neutral sheet N as the parameter. The diagram is constructed by using the conservation of the magnetic flux.[9,39] The parameters for the model ring current is r_{eo} = 1.5a, g_1 = 2.990, g_2 = 0.499,

and $\alpha = 2.0$.[9] For the neutral sheet, its field is assumed to be uniform. The diagram is simply to illustrate the basic result of the N-R interaction, and thus a more rigorous treatment of the problem is necessary when the magnetic fields of the ring current and of the neutral sheet become available.

In Fig. 5, it can be seen that the neutral sheet of intensity $N = 50\ \gamma$ alone can open the field lines beyond dp lat 70°, but the growth of the ring current increases considerably the opening efficiency; for the ring current of intensity $R = 300\ \gamma$, the field lines beyond dp lat 53° 37' can be opened and thus this latitude can be exposed to the hot plasma from the neutral sheet.

For an extreme case of the ring current intensity $R = 300\ \gamma$ and the neutral sheet intensity $N = 90\ \gamma$, dp lat 47° 30' can be exposed to the hot plasma from the neutral sheet. This latitude is little less than the minimum dp latitude attained by quiet auroral arcs during the IGY (Fig. 3).

The expansion of the oval from the quiet time location ($>$ dp lat 74°) to the average location (dp lat 67°) may also be caused by other processes such as those proposed by Taylor and Hones[40] or by William and Mead.[27] However, since the expansion from its average location depends clearly on the

growth of the main phase decrease (Fig. 3), it is quite likely that the N-R interaction plays a major role on the expansion of the auroral oval from its average location.

(b) The N-R Interaction and the Auroral Substorm

Besides the equatorward expansion of the auroral oval as a whole, the poleward boundary of the oval belt repeats poleward motions and subsequent equatorward motions, namely the auroral substorm. Figure 6 shows the poleward motion of the poleward boundary of the oval during an exceptionally intense explosive phase of one of the auroral substorms recorded during the great geomagnetic storm of February 11, 1958. The expansion began almost simultaneously over the entire region in the dark sector along dp lat 48° ~ 50°, and the poleward boundary (where brightest auroral bands were seen) reached as high as dp lat 71° at the maximum epoch of the substorm; the region swept by the poleward boundary was covered by patchy auroras.

It is tempting to speculate that the N-R interaction also plays an important role in the auroral substorms since the substorm is likely to be a rapid poleward shift of the region which

is exposed to the hot plasma from the neutral sheet; thus it is a sort of the reverse process discussed in (a).

Suppose that the intensity of the neutral sheet is suddenly decreased. As is clear from Fig. 5, the sudden decrease of the intensity of the neutral sheet must indicate a sudden decrease in the efficiency of the N-R interaction. For the ring current intensity R = 100 γ, a decrease of the neutral sheet intensity from N = 50 γ to 10 γ can cause the closure of the field lines which anchor between dp lat 57° and 68°. Therefore, as soon as the neutral sheet intensity begins to decrease, the region which is exposed to the neutral sheet shifts polewards from dp lat 57° to 68°. In fact, during geomagnetic storms of medium intensity ($R \simeq 100 \sim 150\ \gamma$), the auroral oval descends from its average location (dp lat 67°) to about dp lats 57° ~ 60°; then during auroral substorms, the poleward boundary of the oval moves rapidly to about dp lat 70°.[25,30,41] Brightest auroral bands are seen at the advancing boundary, and the region swept by such bands is covered by irregular bands or patches. The substorm shown in Fig. 6 could be explained if the intensity of the neutral sheet decreases from N = 90 γ to N = 10 γ (or a little less) and if R

is of order 300 γ. In fact, such a drastic substorm occurs only during greatest geomagnetic storms.[23]

It is interesting to note in this connection that Behannon and Ness[6] observed sharp decreases of the magnetic field intensity in the tail region of the magnetosphere, when intense polar magnetic substorms were observed at College; as mentioned earlier, the polar magnetic substorm and the auroral substorm occur together, and in fact they are simply different aspects of the same phenomenon.[1]

Changes of the low latitude geomagnetic field during the auroral and polar magnetic substorm are very complicated ones.[42,43] A sharp positive change in the horizontal component, namely the so-called 'positive bay', occurs in an extensive part of the earth, particularly in the dark sector and sometimes over the entire earth.[43] This positive change has been interpreted as due entirely to the return current from the polar electrojet. The above discussion suggests that a part of this positive change may be due to the decrease of the intensity of the neutral sheet current. Further extensive study is, however, necessary to correlate in detail geomagnetic field changes on the ground and in space.

After reaching the northernmost latitude (in the Northern Hemisphere), the bright bands begin to return towards their initial location, the recovery phase. This phase proceeds much more slowly and lasts from 1 ~ 3 hours. Since the region which is exposed to the neutral sheet is shifting towards lower latitudes, the efficiency of the N-R interaction must be increasing during this phase.

In constructing Fig. 5, the magnetic field produced by the electric current system at the magnetospheric boundary is not taken into account. It is very unlikely, however, that this field changes drastically the nature of the N-R interaction in the midnight sector; we may need a little more intense neutral sheet than those used in Fig. 5 ($N = 20\ \gamma$ for $N = 10\ \gamma$, etc.).

Further, in constructing Fig. 5, we have taken into account only the flux conservation theorem and have not considered motions of the magnetospheric plasma associated with the changes of the ring current intensity and of the neutral sheet current intensity. Clearly, in the equatorial plane, the magnetospheric plasma will have radial motions ($\partial \underline{B}/\partial t = \nabla \times (\underline{v} \times \underline{B})$). It is likely that our treatment could be allowed as a first approximation if a

phenomenon takes place in a characteristic time length which is longer than the transit time of hydromagnetic waves over a characteristic scale-length with which we are concerned. For simplicity, taking $B \simeq 50\ \gamma$ ($= 5 \times 10^{-4}$ gauss) and the number density of the plasma $n = 10/cm^3$, the velocity of hydromagnetic waves V_A is of order $V_A = B/\sqrt{4\pi\rho} \simeq 250$ km/sec; here ρ denotes the mass density of the plasma. The characteristic scale-length is of order 20a. Therefore, if our phenomena occur in a characteristic time-length longer than $20a/V_A \simeq 250$ sec, our treatment will give essentially the correct result. The equatorward expansion of the oval occurs with the growth of the main phase, with the characteristic growth time of order $6 \sim 10$ hours. However, the transient process like the expansive (or explosive) phase of the auroral substorm has the growth time of order $1000 \sim 2000$ sec, so that the motion of the plasma and the field lines may occur in a manner similar to that of shock waves. A more detailed treatment, by using the two fundamental equations of hydromagnetics, would be necessary to examine this process. Nevertheless, it is important to see that the gross feature of the auroral substorm could be explained by a sudden decrease of the current intensity in the neutral sheet.

The cause of the sudden decrease of the intensity of the neutral sheet current is not known. Since the decrease is associated with a considerable increase of the flux of electrons in the violently expanding oval, this may mean that the plasma is 'squeezed out' from the neutral sheet (if they originally occupied the sheet) or the plasma is energized by an annihilation process of the magnetic field in the vicinity of the neutral sheel (in a manner similar to that which has been proposed for solar flares[44]). The auroral substorms occur intermittently so that the process which causes the sudden decrease of the neutral sheet intensity should also appear intermittently. It is interesting to note in this connection that auroral substorms occur most frequently and are most intense when the main phase decrease is being rapidly built up.[45] It seems likely that the magnetosphere became quite unstable during such a period.

We have not discussed so far the role of the F-R interaction which delimits the trapping region in the day sector. It has been noticed that the flux of the electrons in the trapping region in the day side undergoes a considerable change; particularly, the outer part of the trapping region may sometimes be full of the electrons, but sometimes almost empty. This can be recognized

from the fact that the outer boundary of the trapping region in the noon sector is not well defined.[27,46] On the other hand, the outer boundary of the trapping region in the midnight sector is much more sharply defined. Undoubtedly, both interactions are operating simultaneously during geomagnetic storms, but the above difference seems to suggest a difference in their effectiveness in delimiting the boundary between the trapping region and the tail region.

It is not possible to speculate at this stage on the precise mechanism by which individual auroral arcs or bands are produced. However, since the gross dynamical feature of the auroral oval (in which auroral arcs or bands are located) seems to be reasonably explained by the proposed configuration of the internal structure of the magnetosphere, we may infer that the mechanism is related to 'fine structures' in the neutral sheet, perhaps such as that discussed by Furth, Killeen, and Rosenbluth.[47]

(c) The N-R Interaction and the Polar Electrojet

During the auroral substorm there occurs a great increase of the flux of the hot auroral plasma along the auroral oval, although unfortunately we are still ignorant of the actual processes

taking place in the sheet. However, it is reasonable to start our discussion of the polar electrojet by granting the fact that during auroral substorms an intense intrusion of the hot plasma does occur from the neutral sheet towards the earth (along the geomagnetic field lines which are determined by the N-R interaction); we infer thus that the plasma in the neutral sheet is accelerated towards the earth.

Let us consider the dynamics of such an intruding plasma from the neutral sheet. First of all, we must examine the initial condition. Since the eastward drift motion of the whole auroral system is now well understood to be associated with the eastward motion of the magnetospheric plasma,[1,25,48] it can be used as an important tool to investigate this problem. During periods between two auroral substorms, the eastward drift motion is very slow, if any; it can be recognized only by projecting all-sky camera film (taken once every minute) with a speed of 5 ~ 10 frames per second. It is also well known that isolated rays (which are essentially folded portions of a faint arc) stay in the same region of the sky for several to ten minutes. Therefore, if auroral arcs are produced by some fine structures in the neutral sheet, there seems to be little relative motion between the earth

and the plasma in the neutral sheet during such quiet periods, so that the plasma must be rotating with the earth with the same velocity. However, during the substorms, the eastward motion becomes quite obvious even in successive frames of the film. Thus, a significant relative motion (~ 300 m/sec) occurs and the plasma moves faster than the earth.

If the plasma is initially rotating with the earth and is then accelerated toward the earth, it will acquire a greater angular velocity than that of the earth. The law of the conservation of the absolute angular momentum states that

$$r \cos \phi \left(\left(\frac{d\lambda}{dt} \right) + \omega \right) = \text{const}$$

where r, ϕ, and λ denote the radial distance, latitude, and longitude of the location of the plasma, and ω the angular velocity of the rotating earth. Since $r \cos \phi \, (d\lambda/dt)$ = the east-west component of the velocity (V_λ), we have

$$V_{\lambda 2} = \frac{\omega}{r_2 \cos \phi_2} \left(r_1^2 \cos^2 \phi_1 - r_2^2 \cos^2 \phi_2 \right)$$

$$\simeq \left(\omega \, r_2 \cos \phi_2 \right) \left(r_1^2 / r_2^2 \cos^2 \phi_2 \right)$$

where the suffixes 1 and 2 refer to the initial and the final

situation, respectively, and for simplicity we take $V_{\lambda 1} = 0$ with respect to the rotating earth and $\phi_1 = 0$.

Clearly, $(r_1^2/r_2^2 \cos^2 \phi_2) >> 1$, so that the intruding hot plasma acquires an eastward velocity component which is greater than the velocity of the rotation of the earth in the auroral zone.

With this new velocity component, the plasma tends to develop an equatorward polarization electric field (due to $\pm e \underline{V}_\lambda \times \underline{B}$) of magnitude $E \simeq V_\lambda B$. However, the ambient magnetospheric plasma (including the ionosphere) is likely to prevent it from attaining the above value. Auroral observations suggest that V_λ is of the order 200 ~ 1000 m/sec.

Therefore, the magnetospheric plasma above the auroral arc tends to move eastward with a speed greater than that of the earth's rotation and also to force the ionospheric plasma to follow the motion. In the E-region of the ionosphere, such a motion is resisted by the neutral atmosphere; positive ions in the E-region cannot participate in the eastward motion because of frequency collisions with neutral particles. On the other hand, electrons in the E-region are essentially gyro-free so that they escape such a resistance and can participate in the eastward

motion.[48,49] The result is an intense eastward flow of the electrons or a westward current in the E-region along the auroral oval (Fig. 4).

5. Concluding Remarks

Although far more detailed studies on the physics of the neutral sheet and the ring current are needed, it is likely that the N-R interaction undoubtedly plays a vital role in determining the internal structure of the magnetosphere and the auroral oval. Therefore, we can infer a delicate function of the N-R interaction in the magnetosphere by observing the changing atmospheric glow, the aurora, and the geomagnetic storm fields. In other words, the entire polar atmosphere may be considered to be a gigantic oscilloscope screen, and it is the N-R interaction which is delineating the image of the changing auroral oval on the 'screen'.

ACKNOWLEDGEMENTS

I would like to express my thanks to Dr. S. Chapman and Dr. J. A. Van Allen for their discussions during the preparation of this paper. I would also like to thank Dr. J. H. Piddington and Dr. R. N. DeWitt for their critical comments on an early version of the manuscript. The work reported here is supported in part by grants from the National Aeronautics and Space Administration (NsG 201-62 and NsG 233-62) and the National Science Foundation (GP 2721).

REFERENCES

1. S.-I. Akasofu, S. Chapman, and S.-C. Meng, J. Atmosph. Terr. Phys. (in press).

2. J. H. Piddington, J. Geophys. Res., 65, 93, 1960.

3. N. F. Ness, J. Geophys. Res., 70, 2989, 1965.

4. W. I. Axford, H. E. Petschek, and G. L. Siscoe, J. Geophys. Res., 70, 1231, 1965.

5. L. J. Cahill and D. H. Bailey, Trans. Amer. Geophys. Union, 46, 116, 1965.

6. K. W. Behannon and N. F. Ness, Pub. Goddard Space Flight Center, NASA, October 1965.

7. J. H. Piddington, Planet. Space Sci., 11, 1277, 1963.

8. J. H. Piddington, Space Sci. Rev., 3, 724, 1964.

9. S. I. Akasofu, J. Geophys. Res., 68, 4437, 1963; see also Space Sci. Rev., 2, 91, 1963.

10. S.-I. Akasofu, W. C. Lin, and J. A. Van Allen, J. Geophys. Res., 68, 5327, 1963.

11. Y. I. Feldstein, Geomagnetism and Aeronomy, 3, 183, 1963.

12. O. V. Khorosheva, Geomagnetism and Aeronomy, 2, 696, 1962.

13. J. M. Malville, J. Geophys. Res., 64, 1389, 1959.

14. T. N. Davis, J. Geophys. Res., 67, 75, 1962.

15. B. P. Sandford, J. Atmosph. Terr. Phys., 26, 749, 1964.

16. K. Lassen, Pub. Det Danske Meteorologiske Inst., No. 16, 1963.

17. L. A. Frank, J. A. Van Allen, and J. D. Craven, J. Geophys. Res., 69, 3155, 1964.

18. T. A. Fritz and D. A. Gurnett, J. Geophys. Res., 70, 2485, 1965.

19. S.-I. Akasofu, J. Atmosph. Terr. Phys., 26, 1167, 1964.

20. W. J. Stringer, A. B. Belon, and S.-I. Akasofu, J. Atmosph. Terr. Phys. (in press).

21. W. J. Stringer, M.S. Thesis, Geophys. Inst., Univ. of Alaska, 1966.

22. S.-I. Akasofu, J. Atmosph. Terr. Phys., 24, 723, 1962.

23. S.-I. Akasofu and S. Chapman, J. Atmosph. Terr. Phys., 24, 735, 1962.

24. S.-I. Akasofu and S. Chapman, J. Atmosph. Terr. Phys., 25, 9, 1963.

25. S.-I. Akasofu, Space Sci. Rev., 4, 498, 1965.

26. B. Maehlum and B. J. O'Brien, J. Geophys. Res., 68, 997, 1963.

27. D. J. Williams and G. D. Mead, J. Geophys. Res., 70, 3017, 1965.

28. N. F. Ness and D. J. Williams, Pub. Goddard Space Flight Center, NASA, July, 1965.

29. J. H. Piddington, Planet. Space Sci., 13, 565, 1965.

30. S.-I. Akasofu, Planet. Space Sci., 12, 273, 1964.

31. S.-I. Akasofu, C.-I. Meng, and D. S. Kimball, J. Atmosph. Terr. Phys. (in press).

32. S.-I. Akasofu, C.-I. Meng, and D. S. Kimball, J. Atmosph. Terr. Phys. (in press).

33. S. Chapman and J. Bartels, Geomagnetism, Oxford Univ. Press, 1940.

34. H. C. Silsbee and E. H. Vestine, Terr. Mag., 47, 195, 1942.

35. N. Fukushima, J. Fac. Sci., Tokyo Univ., 8, 293, 1953.

36. G. D. Mead, J. Geophys. Res., 69, 1181, 1964.

37. S.-I. Akasofu, J. C. Cain, and S. Chapman, J. Geophys. Res., 67, 2645, 1962.

38. S.-I. Akasofu, Space Sci. Rev., 2, 91, 1963.

39. A. J. Dessler and R. Karplus, J. Geophys. Res., 66, 2289, 1961

40. H. E. Taylor and E. W. Hones, J. Geophys. Res., 70, 3605, 1965.

41. S.-I. Akasofu, D. S. Kimball, and C.-I. Meng, J. Atmosph. Terr. Phys. (in press).

42. S.-I. Akasofu, Planet. Space Sci. (submitted).

43. S.-I. Akasofu and S. Chapman, Planet, Space Sci., 12, 607, 1964.

44. H.-E. Petschek, AAS-NASA Symposium on the Physics of Solar Flares, October 1963, NASA Pub. SP-50, p. 425.

45. S.-I. Akasofu and S. Chapman, J. Geophys. Res., 68, 3155, 1963.

46. T. Armstrong, J. Geophys. Res., 70, 2077, 1965.

47. H. P. Furth, J. Killeen, and M. N. Rosenbluth, Phys. Fluid, 6, 459, 1963.

48. S.-I. Akasofu, J. Atmosph. Terr. Phys., 19, 10, 1960.

49. W. I. Axford and C. O. Hines, Canadian J. Phys., 39, 1433, 1961.

FIGURE CAPTIONS

Figure 1. Schematic drawing (the noon-midnight meridian cross-section) of the structure of the magnetosphere and of the auroral oval. Note that the great day-night asymmetry of the trapping region is projected on the ionosphere and is seen as the eccentricity of the auroral oval.

Figure 2. Location of the auroral oval obtained by Feldstein[11] and of the iso-intensity (the flux = $10^4/cm^2$ sec) contour line of the trapped electrons of energies greater than 40 keV.[17]

Figure 3. Relation between the lower limit of latitude (dp (or gm) lat) attained by quiet arcs during geomagnetic storms and the magnitude of the main phase decrease (Dst).

Figure 4. Distribution (schematic) of the aurora and the polar electrojet during a quiet period and the auroral substorm.

Figure 5. Relation between the minimum latitude opened by the N-R interaction and the intensity of the ring current field (R) for different intensities of the neutral sheet field (N).

Figure 6. Expansion of the width of the auroral oval during one of the auroral substorms of the great geomagnetic storm of February 11, 1958.

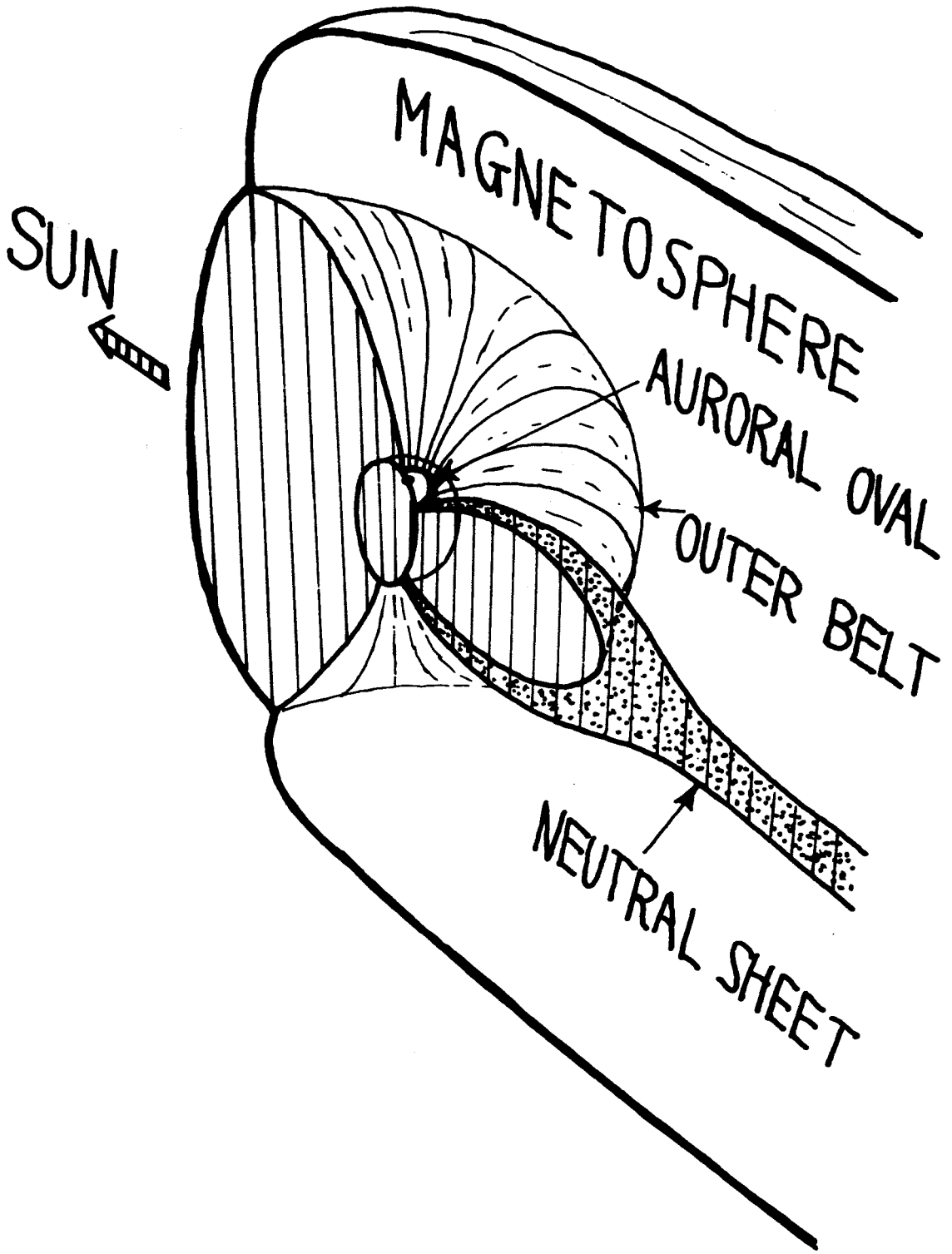

Figure 1

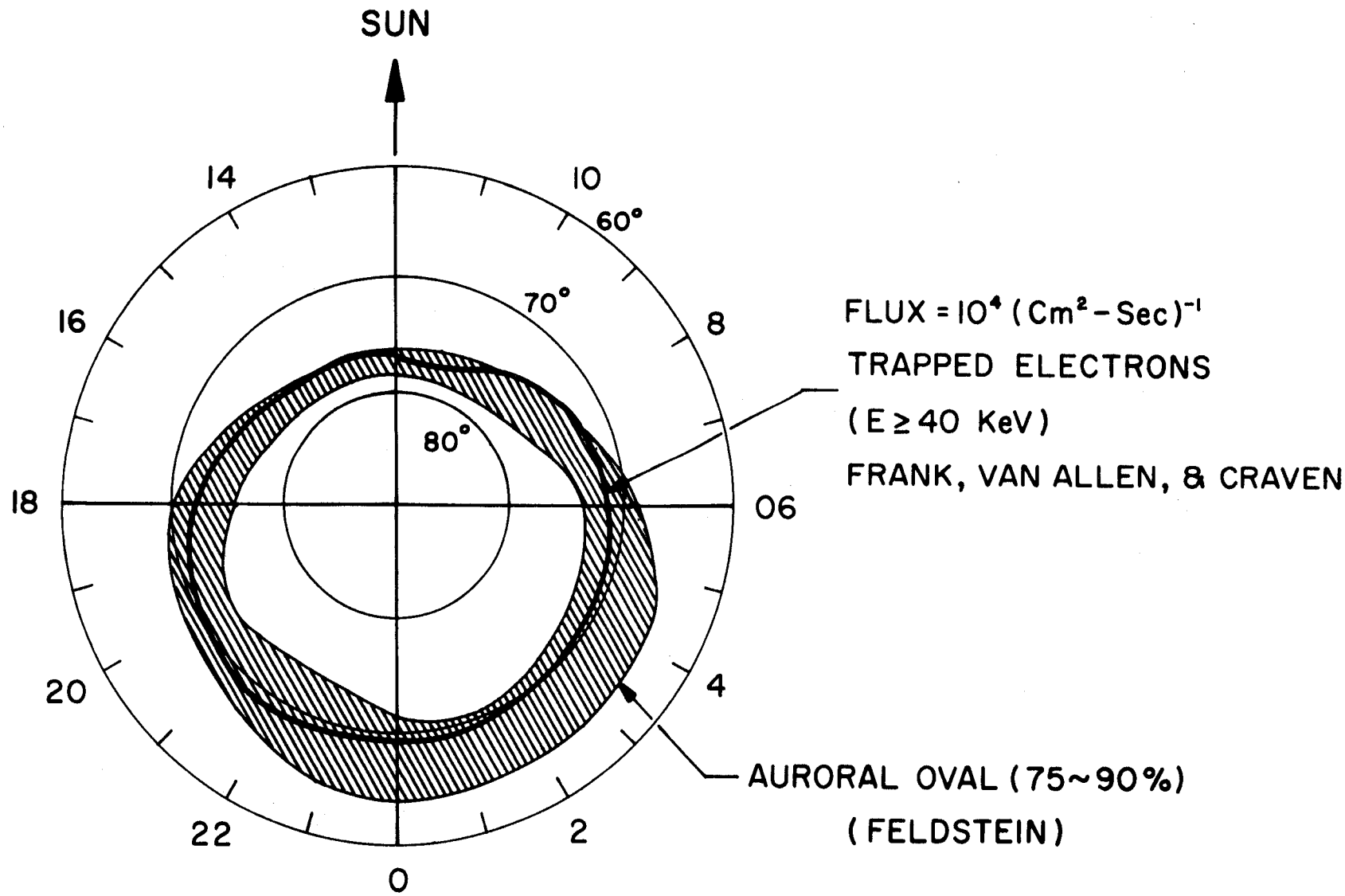
SUN
14
10
60°
70°
16
8
80°
18
06
20
4
22
2
0
FLUX = 10⁴ (Cm²-Sec)⁻¹
TRAPPED ELECTRONS
(E ≥ 40 KeV)
FRANK, VAN ALLEN, & CRAVEN
AURORAL OVAL (75~90%)
(FELDSTEIN)

Figure 2

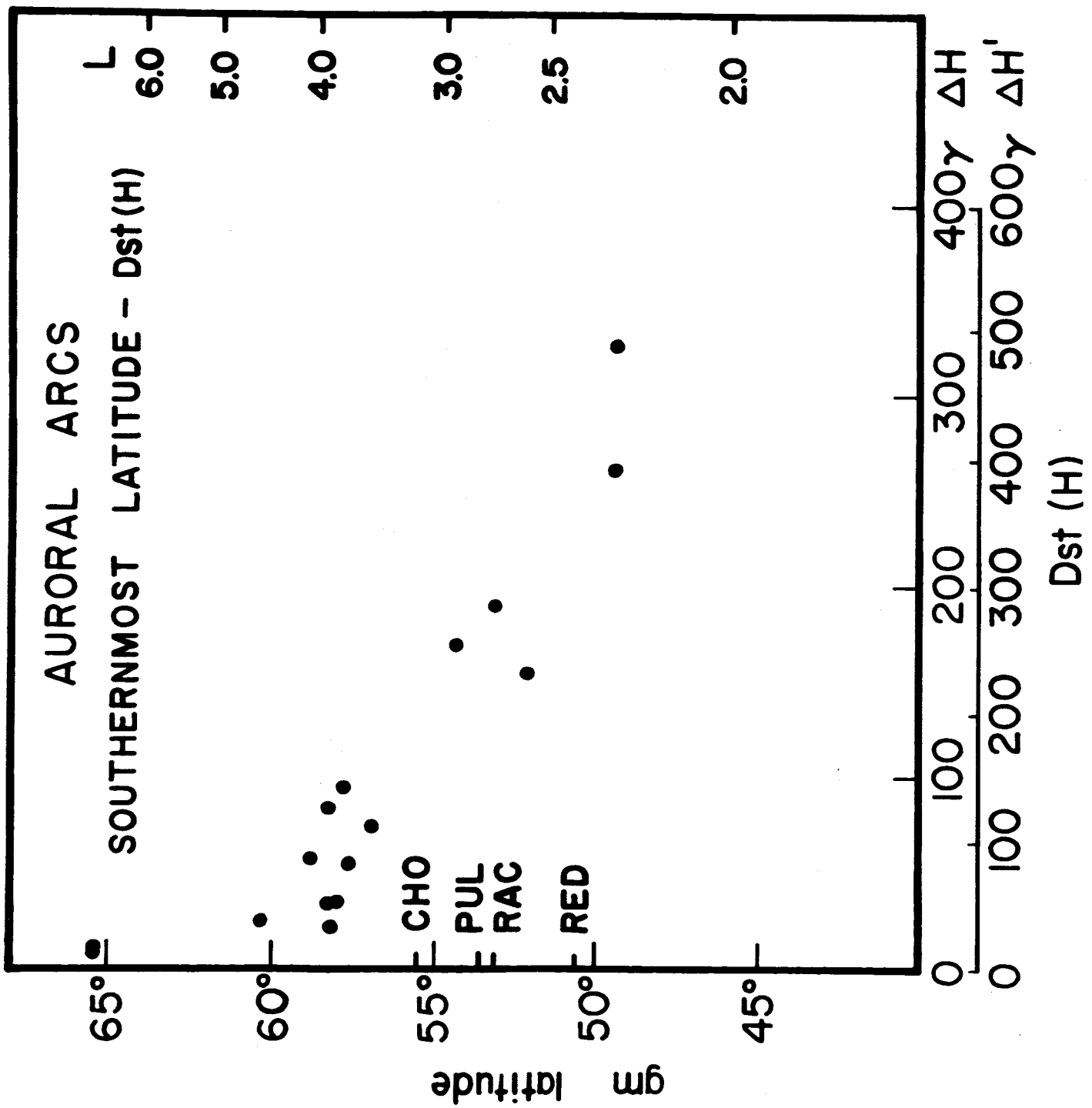
AURORAL ARCS
SOUTHERNMOST LATITUDE - Dst (H)
L
6.0
5.0
4.0
3.0
2.5
2.0
CHO
PUL
RAC
RED
65°
60°
55°
50°
45°
gm latitude
0
100
200
300
400
500
600γ ΔH'
400γ ΔH
Dst (H)

Figure 3

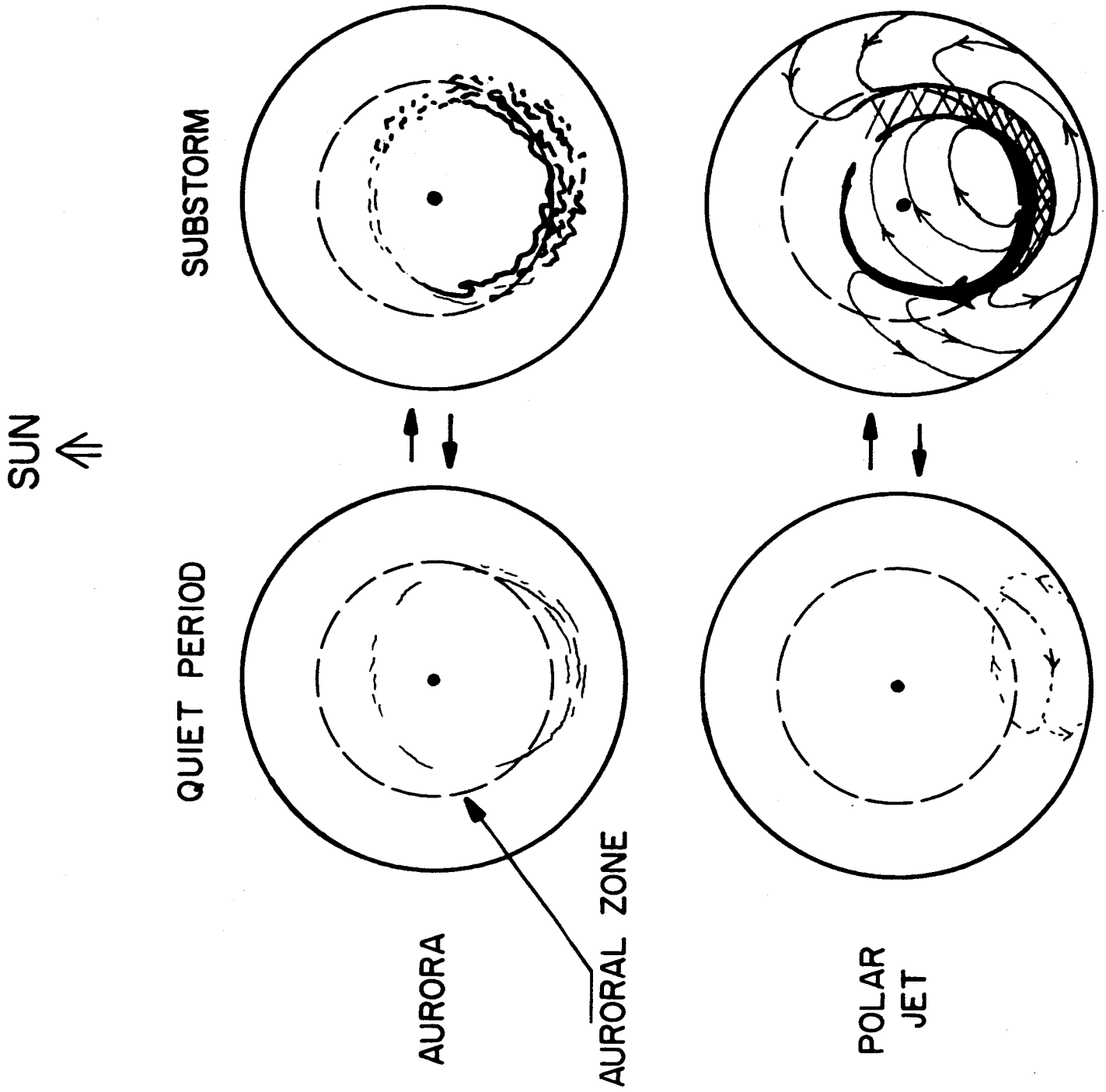

Figure 4

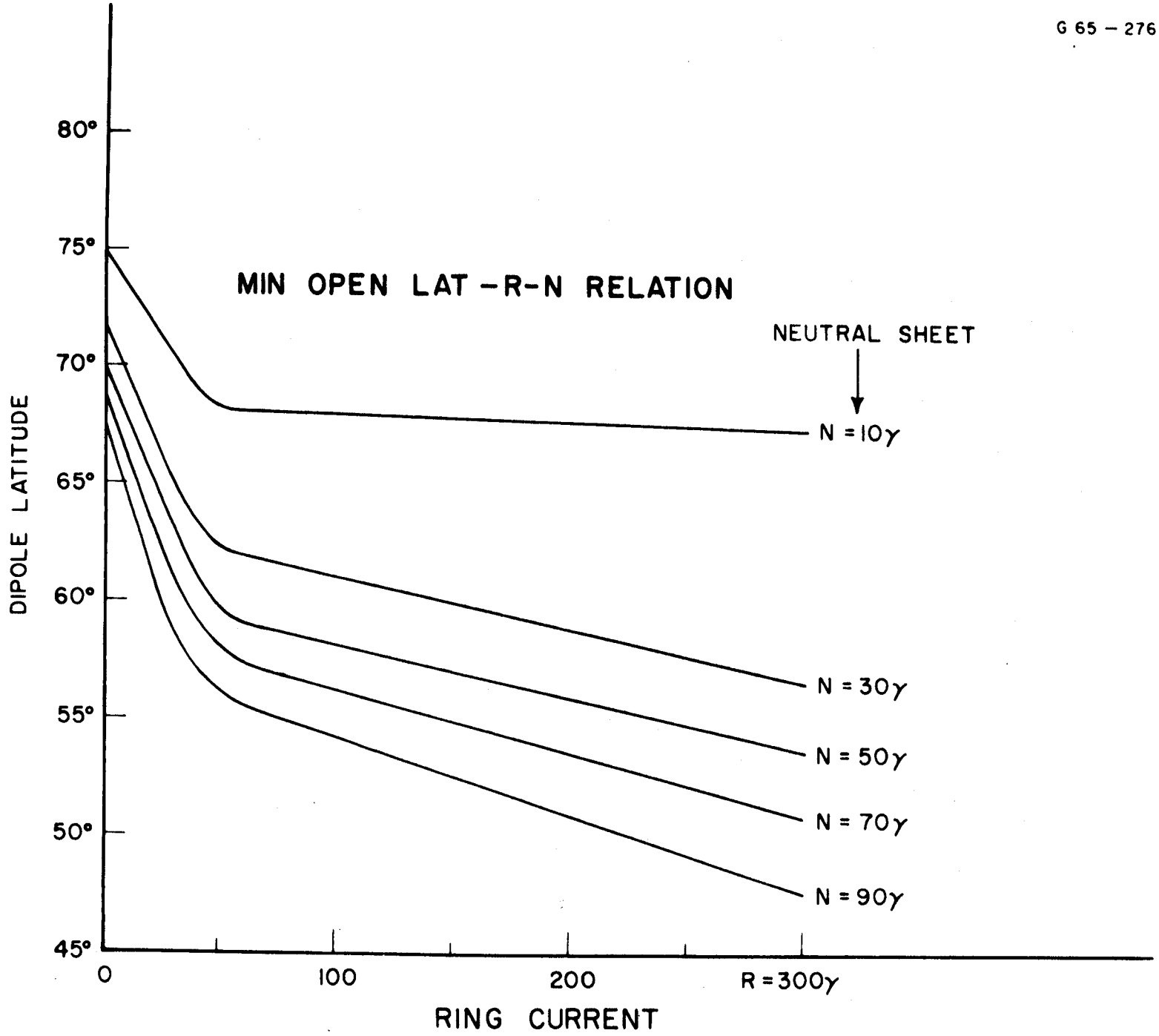
MIN OPEN LAT-R-N RELATION
NEUTRAL SHEET
N = 10γ
N = 30γ
N = 50γ
N = 70γ
N = 90γ
DIPOLE LATITUDE
80°
75°
70°
65°
60°
55°
50°
45°
0
100
200
R = 300γ
RING CURRENT

Figure 5

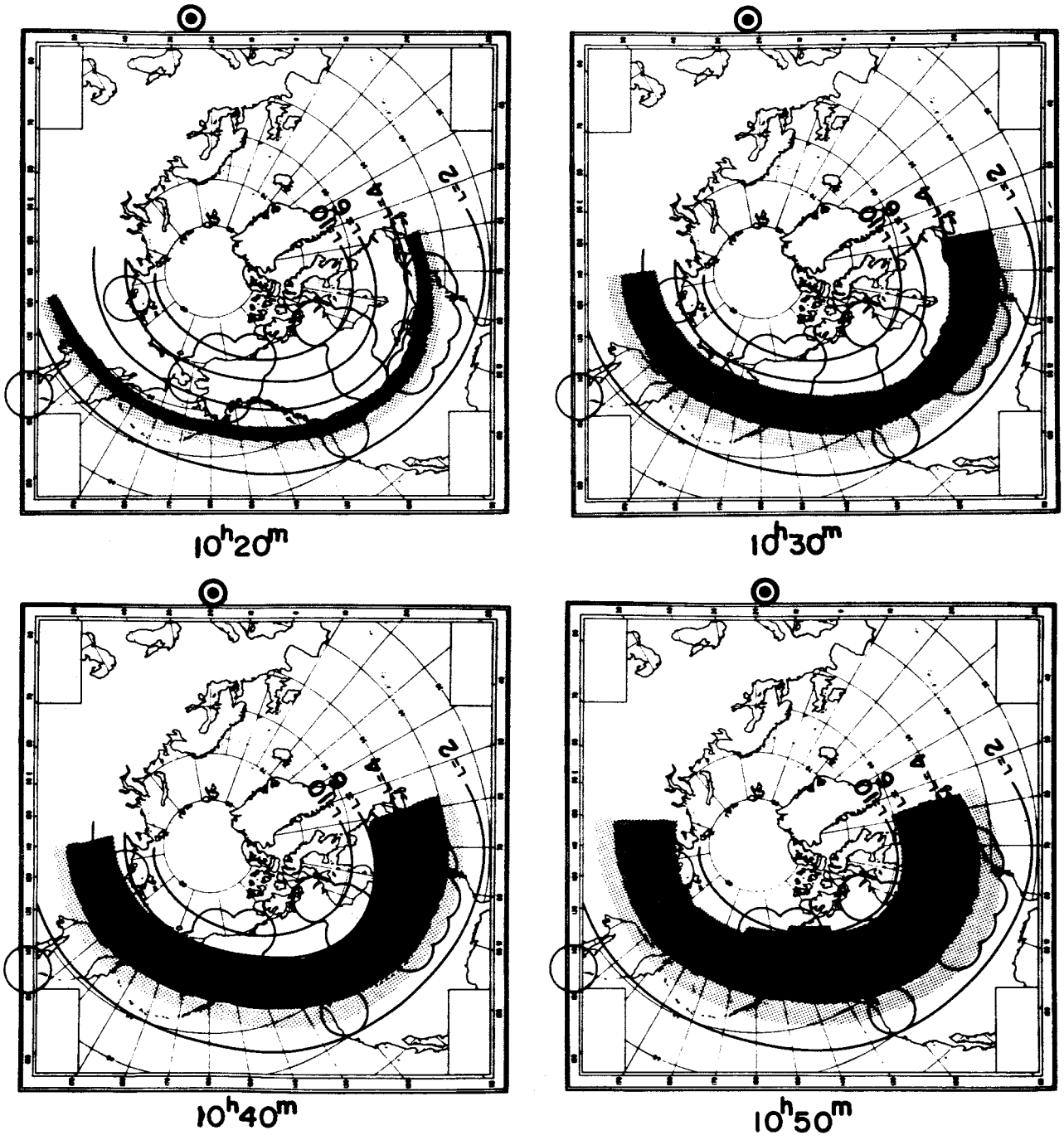

Figure 6