https://ntrs.nasa.gov/search.jsp?R=19660010420 2019-03-19T02:18:47+00:00Z

NASA CR 71253

# STUDY OF MODIFICATION OF A LUNAR LANDING RESEARCH VEHICLE TO A LUNAR LANDING TRAINING VEHICLE

7260 - 945001

Contract NAS4-981

January 26, 1966

J. Ryken

## TABLE OF CONTENTS


| | Page |
|---|---|
| Introduction | 1 |
| 1.0 Cockpit | 3 |
| 2.0 Electronics | 7 |
| 3.0 Rockets | 12 |
| 4.0 Structure | 21 |
| 5.0 Operations | 30 |
| 6.0 Ground Support Equipment | 34 |
| 7.0 Parts | 39 |
| 8.0 Weight and Performance | 42 |

## Introduction

On December 1, 1965, Bell Aerosystems initiated a six weeks study to define the changes which should be made to progress from the existing design of Lunar Landing Research Vehicles (LLRV) to Lunar Landing Training Vehicles (LLTV) suitable for astronaut training. Design changes and problems to be investigated were specified by the contract work statement. General objectives were to modify the cockpit to give the astronaut a field of view similar to that from LEM and to simplify vehicle design and check-out to reduce maintenance and checkout time.

A verbal summary report was presented to NASA Flight Research Center and Manned Spacecraft Center personnel on January 5, 6, and 7, 1966. This written summary report documents the major results of the study and the tentative decisions made by NASA and Bell personnel during the January presentation. Decisions on some items may be altered after a further review by NASA of the impact of changes on cost, schedules, fidelity of simulation, and ease of maintenance.

Each of the following sections of this report consists of paragraphs from the contractual work statement, followed by a brief summary of study results, and in some cases a statement of tentative decisions.

Section 8 presents a summary of estimated weight, c. g., and moment of inertia changes resulting from each change that was investigated. It also estimates the performance capability of an LLTV, with selected changes from the LLRV. This performance is

in terms of ambient temperature at which takeoff can be achieved at sealevel. Effects of drag and aerodynamic moments on the flight envelope are summarized in Section 5.1.

Major conclusions from this study are that an adequate simulation of the pilots field of view from LEM can be achieved while retaining the seated position for the pilot, some redesign and repackaging of electronics systems would significantly reduce maintenance and checkout time of these systems, and a structural redesign of the jet engine gimbal and other local areas is desirable to increase rigidity and simplify manufacture. Several secondary improvements, primarily to simplify servicing, checkout, and maintenance, are also noted in the body of the report.

1.0 Cockpit:

Work Statement

1.1 Investigate redesign of forward cockpit floor area to provide Lunar Excursions Module (LEM) visibility as defined by NASA specifications.

1.2 Investigate redesign of left console to provide non-interference with outside visibility requirements specified in (1.1). Investigate moving console function to other positions in cockpit. Investigate deletion of system switches from console. Visibility of the console inside the cockpit is considered prime over outside visibility requirements.

1.3 Investigate feasible cockpit shell enclosure designs, frangible materials, pilot cooling, and quick visibility access on side panels.

Study Results

1.1 Floor - An astronaut, looking thru LEM's canted triangular window, can see almost straight down when LEM is in an upright attitude. If a simulated LEM window were placed on the LLRV at an appropriate distance from the astronaut's eye, his downward vision would be limited to an angle of approximately 45 degrees from the vertical by the forward cockpit floor. Figures 1 and 2 show proposed LLRV floor modifications to improve this situation. Changes consist of cutting 14 inches from the front of the floor, removing an additional section at the front left corner, adding a foot well to lower the astronauts knees and to keep his legs firmly against the forward portion of the seat pad.

Copies of Bell preliminary drawing 7161-158502, which show further details of the proposed change were given to MSC and FRC personnel on January 7.

1.2 Console -

To further improve visibility the left console will be shifted 3 inches aft and 2.3 inches will be removed from its forward end. Circuit breakers in this area will be relocated to a sloping auxiliary panel on the left wall above the console. Figures 1 and 2 indicate this auxiliary panel as a small bulge on the left wall, above a console access panel.

1.3 Enclosure -

The cockpit enclosure will be built of a frangible material, probably polystyrene. The cockpit will be fully enclosed on the top, rear, and sides. Initially, it was planned to also enclose the front, except for a triangular opening to simulate the LEM window (see Figure 1). In addition, it was desired to have the window placed close to the astronaut's face to simulate the situation where he is leaning slightly forward in LEM. However, in the LLTV the astronaut will be restrained by a shoulder harness, in an ejection seat that slopes back 13 degrees.

With the window in this desired aft position, the view of the left console was restricted even after the console was moved aft as far as pilot access to switches and throttle would permit. Also,

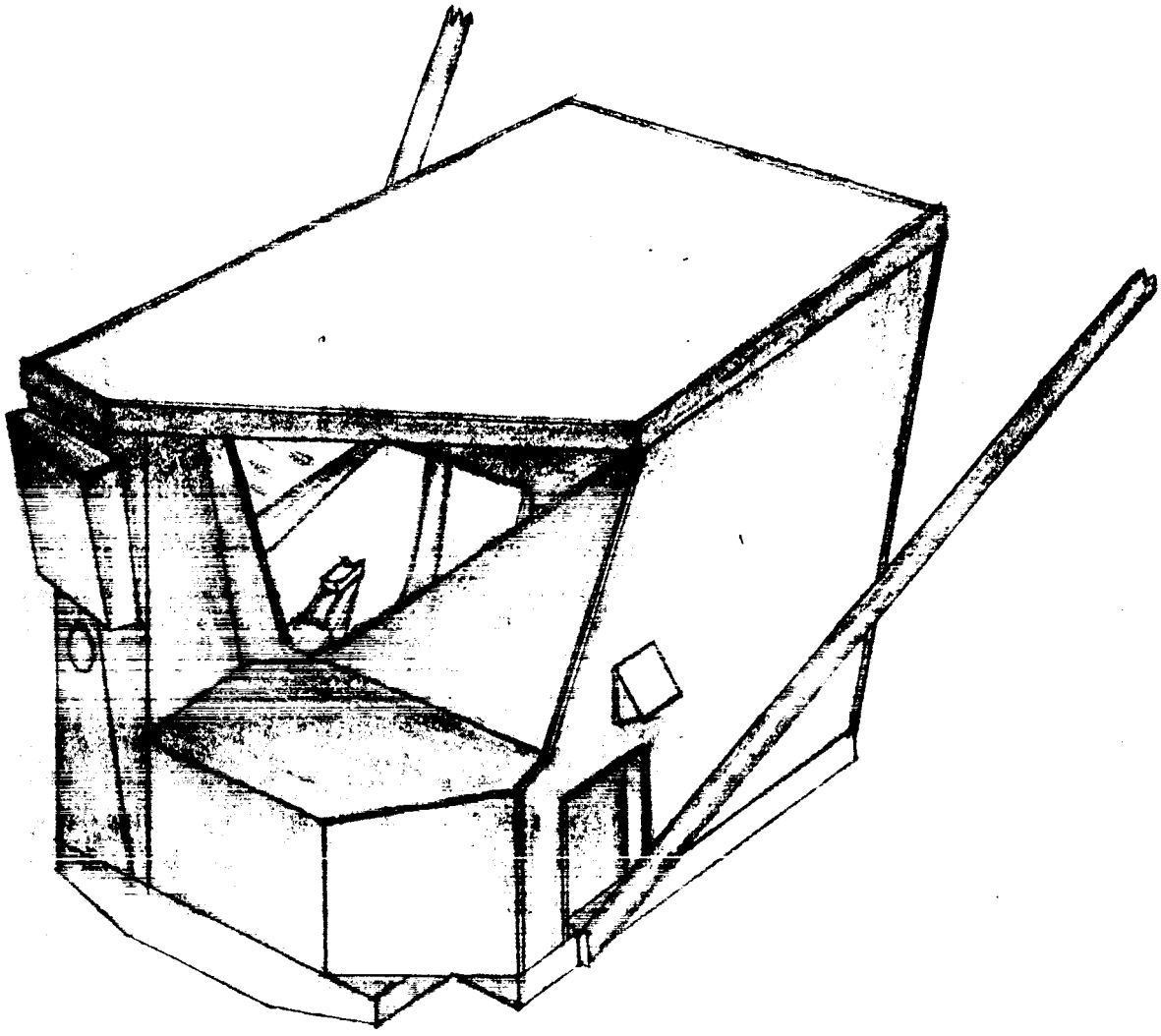

Figure 1

Cockpit Enclosure No. 1

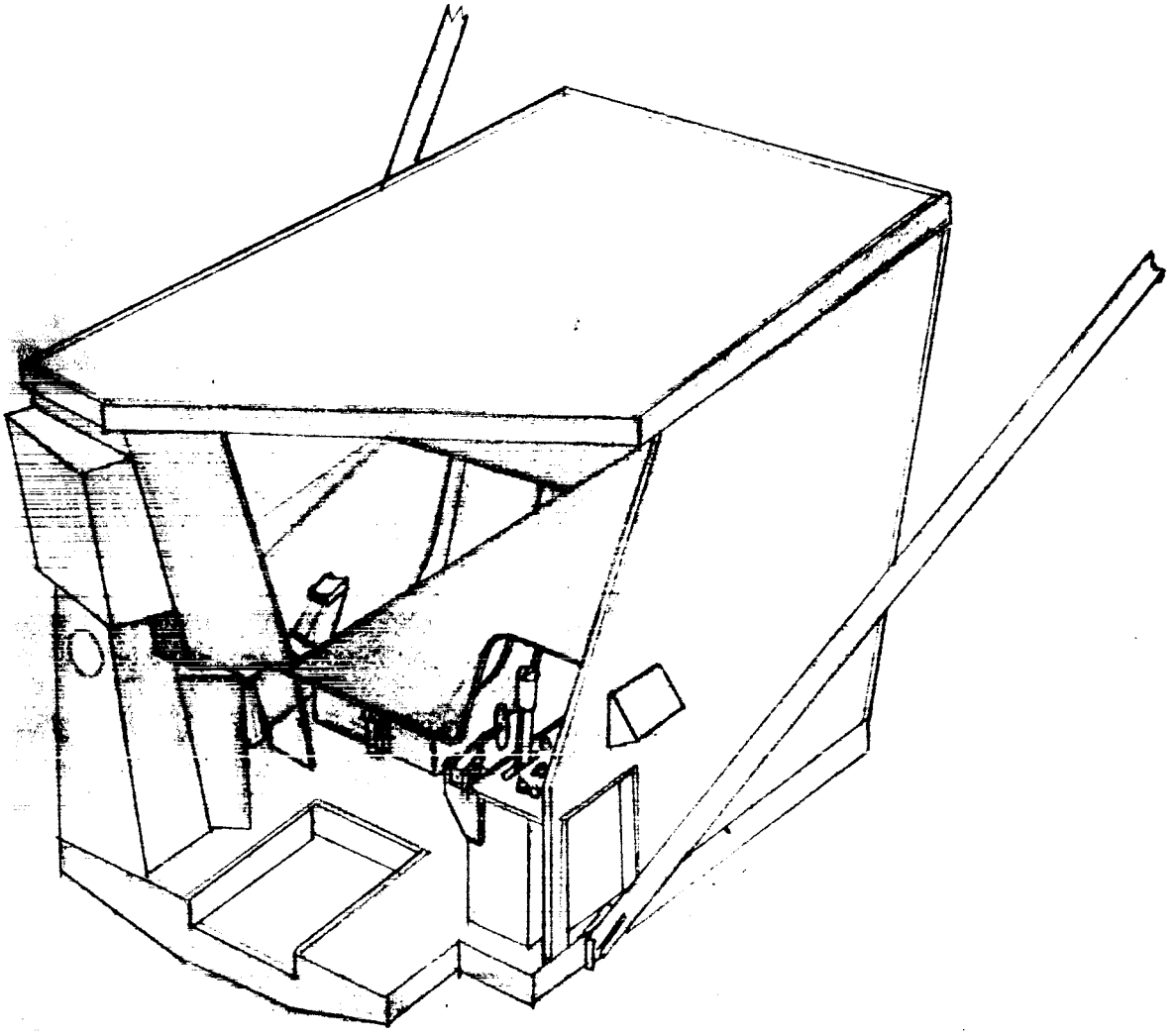

Figure 2
Cockpit Enclosure No. 2

with an enclosure to cover the astronaut's knees, (Figure 1), the downward view was restricted to a degree that was considered intolerable. The selected compromise (Figure 2) eliminated the enclosure of the lower front of the cockpit and moved the window and adjacent front wall approximately 3" forward with an appropriate small increase in size to maintain the field of view. This forward wall and window outline will be removable for pilot access. It can easily be broken by the pilot for emergency egress when use of the ejection seat is not warranted.

With the selected enclosure, pilot cooling should not be a problem.

A window or cutout covered by a panel held in place with velcro will permit emergency vision through the right wall.

## 2.0 Electronics

### Work Statement

2.1 Investigate simplifications to present systems to enhance operational capability. In addition to eliminating system ground adjustments with potentiometers, consideration should be given to elimination of "engine centered" mode of the jet stabilization system, angle command features of the vehicle attitude control system, and percentages of vehicle weight other than5/6

vehicle weight by the auto throttle system. Because training flights will be relatively repeatable, consideration should be given to elimination of the in-flight weighing capability and relying on the known weight mode only in the thrust-to-weight computer. Remaining systems variability should be provided with access to system hard-wire components.

2.2 Considered additions to the vehicle attitude control system should be the incorporation of angle hold features to the rate command mode and direct as well as direct-direct open-loop command features through exisitng micro-switches on the attitude control side stick.

2.3 Investigate methods by which aerodynamic moment compensations can be included in basic vehicle design. Maximum design velocity conditions are 60 fps horizontally and 30 fps vertically with winds up to 15 knots.

2.4 Investigate electrical harness bundle separation and shielding requirements. Consideration should be given to the inclusion of additional connectors in bundles.

Study Results

2.1 Ground Adjustments - It was decided that because of some remaining uncertainties as to exact system characteristics desired and, more important, the ease of initial system adjustment, it would be desirable to retain most LLRV adjustment features. The hysterisis feature of the attitude system will

be deleted. Other adjustments will be provided by lighter weight potentiometers located inside electronic boxes where they will be safe from inadvertent adjustment by the ground crew.

Engine Centered Mode This mode aligns the jet engine axis with the vehicle axes. It could serve as a backup to the gimbal locked mode. Almost all elements required for the feature are needed for monitor functions even if this mode is deleted. This mode will be retained.

Angle Command Feature - This feature will be removed because there is no need for it in the LLTV. Changes to the attitude control system will be minor (attitude gyro is required for attitude indicator in cockpit and for monitor functions of engine stabilization system).

In-Flight Weighing - This feature will be deleted. Significant simplification will result. Instead the known weight mode, in which the predicted weight of LLTV at start of simulation is preset on the ground, will be used. This change also deletes the adjustment which gave the capability to support other than 5/6 weight with the jet engine.

2.2 Angle Hold - An angle hold feature will be added to the rate command mode. This will be implemented by electronically slaving the attitude gyro output to vehicle motion so that a zero attitude reference

signal is provided whenever the attitude control stick is within a ½ degree detent and the vehicle rate is less than 1 deg/sec.

To achieve an acceptable angle hold capability, it is also recommended that the LLRV gyros, which erect to within ½ degree of vertical, be replaced by gyros that erect within approximately 0.1 degree of vertical.

A pilot selectable direct mode, wherein the attitude rockets are fired by microswitches on the hand controller will also be provided. A direct-direct mode, wherein rockets are fired by microswitches at the extremes of stick travel, without pilot selection of the direct-direct mode will not be provided. This is in accordance with a directive by NASA personnel.

2.3 Moment Compensation - A preliminary study of the use of existing attitude rockets to compensate for aerodynamic moments on the LLRV was made under a previous contract. This system will be incorporated in the LLTV.

The proposed system is an electronic model which generates the pitch, roll, and yaw rates resulting from pilot commands in the absence of aerodynamic moments. Signals are sent to the attitude rockets to force vehicle rates to match these model rates even if aerodynamic or other disturbances are present.

2.4 Electrical Harness - Primary and backup leads will be separated and power will be routed separately from signals leads wherever practical. Connectors will be provided so major LLTV elements such as the instrument panel, electronic rack, and jet engine can be easily removed. A copy of Bell drawing 7161-200501 "Electrical Equipment and Wire Routing", which had been marked up with colored pencils to indicate proposed separations, was presented at the Verbal Summary Report.

A review of reported electrical noise problems in the electronic systems was made at FRC by a Bell engineer during the early part of the study. The redesign of the electronic systems (section 5.4) should greatly reduce the system noise, which has increased checkout time but apparently has not affected system operation.

## 3.0 Rockets

### Work Statement

3.1 Investigate the substitution of gaseous nitrogen for gaseous helium in the rocket pressurization system.

3.2 Investigate the deletion of one set of attitude control rockets through the use of multiple valve and fuel line routing. Considerations in this area include weight saved, reliability and safety aspects, and potential maintenance simplifications.

3.3 Investigate the deletion of the emergency rocket system and the drogue chute. Prime consideration of this modification is the weight saved in fuel line reduction, rocket mounting bracketry, elimination of valves, and elimination of the collective stick. Also of interest are the benefits derived throughout the overall rocket system resulting from this simplification.

3.4 Investigate the use of fixed orificing to achieve suitable fixed thrust settings.

3.5 Investigate the location of attitude rocket thrusters to duplicate LEM nominal torque to inertia ratios. (If this function can be accomplished by model shaping resulting from the aerodynamic moment compensation feature, this is satisfactory.)

### Study Results

3.1 Nitrogen - It is feasible to substitute nitrogen for helium as the peroxide system pressurization gas.

However, a 27.5 lb. weight increase will result. Approximately 18 lbs. of this will be transferred from the helium tanks, 72" aft of the pitch axis, to the peroxide tanks on the pitch axis. Thus, the equivalent of one 9 lb. attitude rocket firing through the flight would be required to compensate for this shift of weight.

It was decided to retain helium as a pressurant.

3.2 Deletion of 1 Set of Attitude Rockets -

Figures 3 and 4 show two possible configurations employing 8 rather than the present 16 attitude rockets. Weight savings are approximately 10 and 8 lbs. respectively. The preferred system (Fig 4) is very similar to the existing LLRV system (Fig. 5). Both systems with 8 thrusters are subject to problems with check valves, especially in this application where many cycles are involved and the check valves must be near the hot thrust chambers.

Although cost savings of the order of $50,000 per vehicle could be achieved by deleting 8 chambers, the actual savings over a several year flight program would be much less due to the total thrust chamber life per vehicle being cut approximately in half. By retaining 16 chambers per vehicle, one essentially carries spares on board rather than in the warehouse. This theoretically also gives

additional reliability of the attitude system. However, the probability of a chamber failure that would jeopardize flight safety is extremely low.

It was decided to retain the 16 chamber system.

3.3 Emergency Rockets and Chute -

The decision to delete the emergency rockets and vehicle chute was made by NASA. Bell estimated that 69 lbs. will be saved by deleting the emergency rockets, valves, lines, and brackets.

The deletion of the emergency rockets greatly reduces the flow requirements for the peroxide and pressurization system. Thus, by adding fixed orifices at the inlets to the pressure regulators, a change from the present pilot operated peroxide tank relief valves to smaller non-pilot tank relief valves can be made. This should eliminate the nuisance type problems that have been encountered with the relief valves on the LLRV.

The deletion of the vehicle drogue chute results in a 20 lb. weight reduction.

3.4 Fixed Orifices - Replacement of ground adjustable orifices, for thrust setting of attitude rockets with fixed orifices would reduce weight by 16 lbs.

Use of fixed orifices would result in additional vehicle checkout time to achieve desired thrust settings on the rockets when installed on the vehicle.

Periodic replacement of orifices may also be necessary as chamber performance degrades with time of operation. It was decided to retain the adjustable orifices.

3.5 Rocket Locations -

The aerodynamic moment compensation system of para. 2.3 will result in average angular accelerations equal to those of LEM even though LLTV instantaneous accelerations are different than those of LEM. Thus, it has been decided not to relocate LLRV attitude rockets. The following discussion is presented to show other reasons why the rockets will not be relocated.

Figure 6 shows attitude rocket moment arms required to produce LEM angular accelerations expected in the landing phase. For the NASA specified pitch and roll accelerations of 8 and 7 deg/sec$^2$ and estimated LLRV inertias, the ratio of pitch arm to roll arm should be approximately 3.5. On the LLRV this ratio is approximately 2.0.

Figure 6 also indicates the rocket thrust settings required for two possible pitch arms, if one set of rockets is used. (ie - 2 rockets fire to give a pure ± pitch and ± roll) With one set of rockets and the present 70" pitch arm, 31.5 lb. settings would be required to give pitch accelerations varying from 7.6 to 8.5 deg/sec$^2$ as propellants

are consumed. Roll arms should then be reduced from the present 36" to 20.5".

A reduction of the roll arm to 20.5" would place the rockets within the present cockpit outline. An extension of the pitch arms to give the desired pitch/roll ratio would require considerable redesign, and quite likely introduce unacceptable excitation of structural modes.

With present pitch arms and one set of rockets at 31.5 lbs., flight at speed in excess of 15 ft/sec would produce aerodynamic moments equal to approximately $\frac{1}{4}$ of the attitude rocket capability. LLRV flight experience at the NASA Flight Research Center indicates that these aerodynamic moments would be quite apparent to the pilot.

In addition, aerodynamic moment predictions (see section 5.1) indicate that if only one set of attitude rockets are used in their present location, settings of at least 60 lbs. will be required. This would give accelerations about twice those of LEM.

Because of the precding factors the rockets will be retained in their present locations, with settings in excess of 60 lbs. (using 1 set), or in excess of 30 lbs. with 2 sets, and an aero moment compensation system will be used to give average accelerations equal to those of LEM.

Form 0345 Rev. 1248

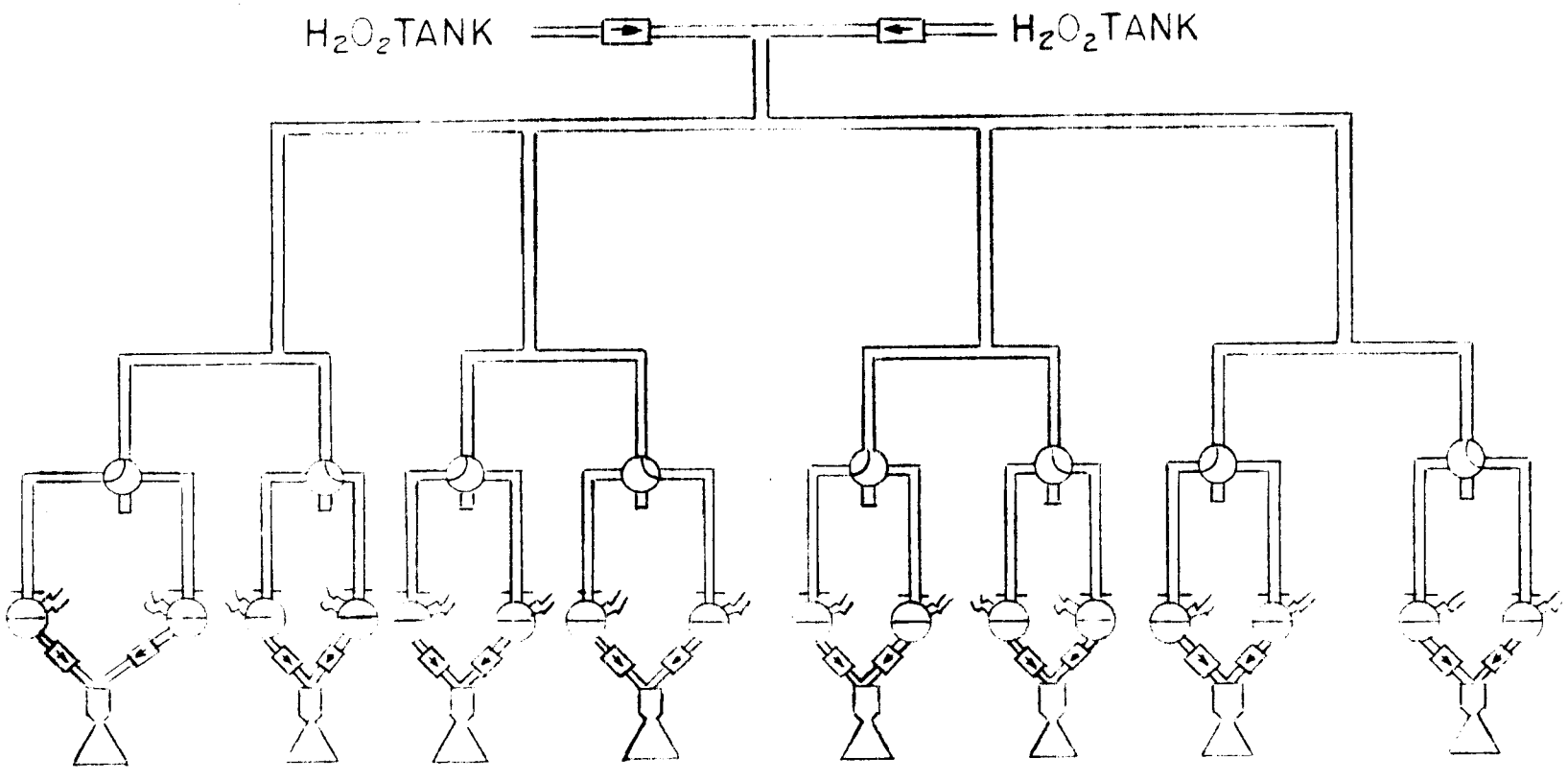


DELETE FROM SYSTEM
2-½" M.C. BALL VALVES
½ LINES AND FITTINGS
[illegible] LB T[illegible]A.
BRA[illegible]

ADD TO SYSTEM
1-½" 3-WAY VALVE
16-3/8 CHECK VALVES

FIG 3 REMOVAL OF ONE SET OF A.C.S. ROCKETS
SYSTEM # I

Model
Date
BELL AEROSYSTEMS COMPANY
DIVISION OF BELL AEROSPACE CORPORATION
Page
Report

Form 0345 Rev. 1248

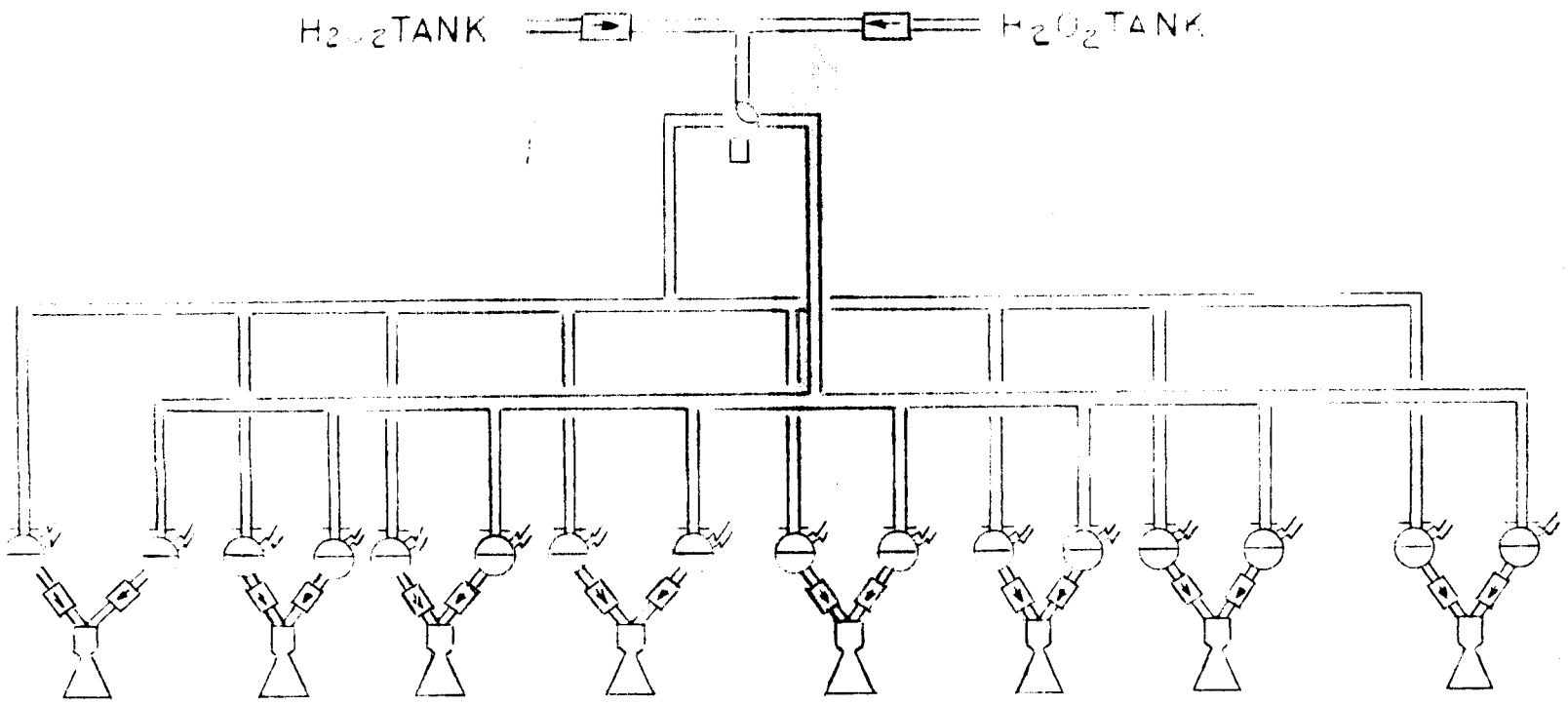


DELETE FROM SYSTEM
- 2 - ½" M.O. BALL VALVES
- 8 - 50 LB T.C.A.
- BRACKETS

ADD TO SYSTEM
- 1 - ½" 3-WAY VALVE
- 15 - 3/8 CHECK VALVES

FI - 4 REMOVAL OF ONE SET OF A C S ROCKETS
SYSTEM # II

Model
Date
BELL AEROSYSTEMS COMPANY
Page
Report

Form 0345 Rev. 1248

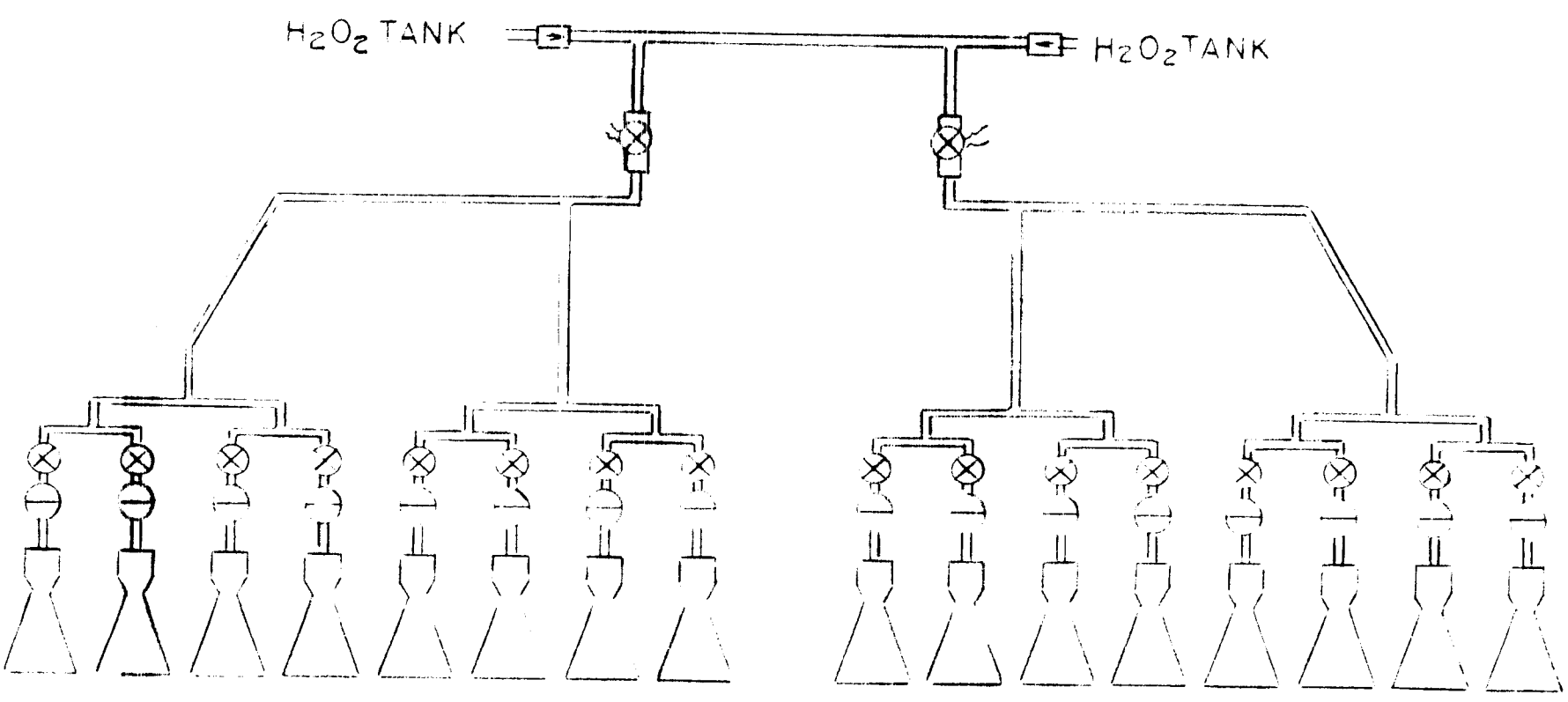


TEST ATTITUDE ROCKETS

STANDARD ATTITUDE ROCKETS

FIG 5

LLRV ACS SYSTEM

Model
Date
BELL AEROSYSTEMS COMPANY
Page
Report

Form 0345 Rev. 1248

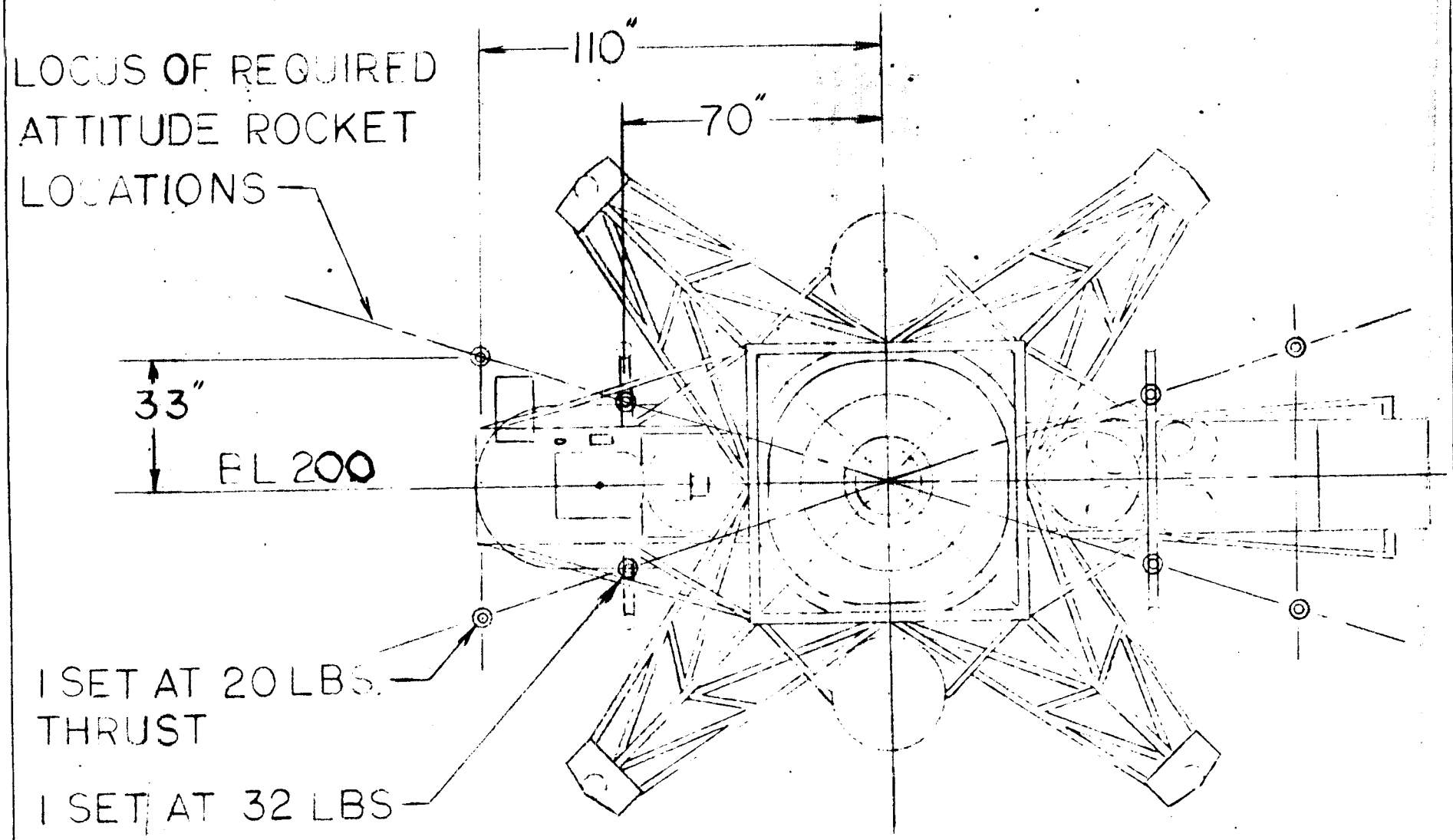


FIG 6

ROCKET LOCATIONS FOR LEM ACCELERATION

Model

Date

BELL AEROSYSTEMS COMPANY
DIVISION OF BELL AEROSPACE CORPORATION

Page 20

Report

## 4.0 Structure

### Work Statement

4.1 Investigate redesign of main engine gimbal.

4.2 Investigate structural changes required to expand existing touchdown envelope to that of LEM. If it is impractical to reach LEM conditions, the practical limitation should be established. Guide line for this investigation will be defined by NASA. NASA will coordinate effort between BAC and Bendix (FRC will provide mainstructure dynamic loads requirements to Bell within 10 working days after Bell receipt of contract. Bell will perform stress analyses.) to insure proper coverage of structural analysis.

4.3 Investigation will also be required to determine preventative methods for corrosion controls throughout the vehicle.

4.4 Investigate redesign of main gimbal bearings to improve wear and lifetime characteristics.

4.5 Investigate possible redesign of aft equipment section to provide increased structural margin, and adaptability to c. g. changes through movable equipment section or equivalent ballasting.

4.6 Consideration should be given to possible redesign of structural members where clearance has been provided through channeling, or where proper clearance is not available with present design.

### Study Results

4.1 Gimbal -

Figure 7 shows preliminary estimates of gimbal ring

torsional rigidity ratio, $R_j$, vs. weight increase and ring depth. ($R_j$ = new section torsional rigidity divided by torsional rigidity of LLRV 3" x 3" x 0.155 gimbal cross section). All values shown here are for tubes 3" wide, because of installation limitations.

Figure 8 shows corresponding ratios of bending moment of inertia.

Example: To double the torsional rigidity with a 5 inch deep section results in a weight increase of 19.75 lb. (Figure 7). The corresponding increase in section moment of inertia is 2.68 (Fig 8). Required wall thickness is.147 (Fig. 9).

Maximum efficiency sections are shown in Figure 10. These result from choosing the peak values of $R_j$ for each weight on Figure 7.

All weights of the preceding curves are based on a uniform wall tube with no flanges. Weights of fittings at gimbal bearings are included in the curves. Incremental weight penalties associated with several possible manufacturing techniques depicted on Bell drawing 7161-438501 are listed below. These are $\Delta$ values above a 3 x 3 x .155 tube weight of 32.80 lb. Calculated penalties are based on a wall thickness of .125. For other wall thicknesses add 32.8, multiply by ratio of wall thickness over .125, and subtract 32.8. These

manufacturing techniques penalties are independent of depth.

Manufacturing Penalties (for t = .125):

| | | |
|---|---|---|
| 1 | 3" x 4" extrusion | -.25 |
| 2 | Riveted | 6.05 |
| 2A | " | 7.10 |
| 3 | " | 6.75 |
| 3A | " | 6.75 |
| 4 | " | 14.80 |
| 4A | " | 21.80 |
| 5 | " | 6.75 |
| 6 | " | 5.35 |
| 7 | Machined Forging | -1.70 |

A gimbal redesign, employing the machined forging fabrication method was selected. A maximum weight increase of 20 lbs. was allocated for increased stiffness. With a 4" gimbal depth in place of the present 3", this should approximately double the gimbal vertical stiffness. More exact structural analyses will be performed during gimbal design to determine if the desired doubling of stiffness can be achieved for a smaller weight penalty.

4.2 LEM Landing Conditions -

This investigation could not be performed because the landing loads, which were to have

been computed by Bendix under separate contract to NASA, were not obtained.

In lieu of this, Bell made very preliminary estimates of LLTV weight increases that will result if present LLRV strength must be increased. Results are:

| Increase in Strength | Weight |
|---|---|
| 1.5 factor | 65 lbs. |
| 2.0 factor | 130 lbs. |

It was decided that no redesign for higher loads will be made unless unexpected results are obtained from the Bendix study.

4.3 It was recommended that open ended structural tubes on the LLRV should be welded closed after application of an interior protective material such as MIL-C-11796 class 3.

It was also recommended that all aluminum be alodized, steel parts cadmium plated and structural members, tanks, etc., be covered with a 3 to 5 mil sprayed tygon film.

In addition the magnesium platform supporting lift rocket throttle valves on the LLRV will be changed to aluminum on the LLTV.

4.4 Gimbal Bearings - A change from Southwest Products Co. Mono-Ball, BLFR-12, to Shafer C-12 self aligning roller bearings, or equivalent, was recommended.

4.5 Equipment Platform -

A redesign in accordance with Bell drawing 7161-138502 was selected. This will eliminate channeling that was used on the LLRV to provide clearance of interfering structural members. It will also eliminate need for braces from the platform to the legs. The movable equipment tray will be redesigned to provide space for all equipment, including the new battery. This tray will also be modified so that fore and aft adjustment can be made more easily and quickly. In addition, it will be adapted to new electronic rack that will result from the electronic repackaging of Section 5.4. One of the transition section braces will be routed to the top of the center section instead of the bottom.

In addition, the brace cables on top of the transition section will be replaced by tubular members. The latter two changes should significantly increase platform rigidity and permit removal of the platform to leg braces that were added to the LLRV.

4.6 Clearance -

Channeling of a leg brace to provide clearance between peroxide tank mounts and leg members will be eliminated by using slightly larger tank support tubes that are bent to clear leg members.

K+E 10 X 10 TO THE ½ INCH 359-11
KEUFFEL & ESSER CO. MADE IN U.S.A.

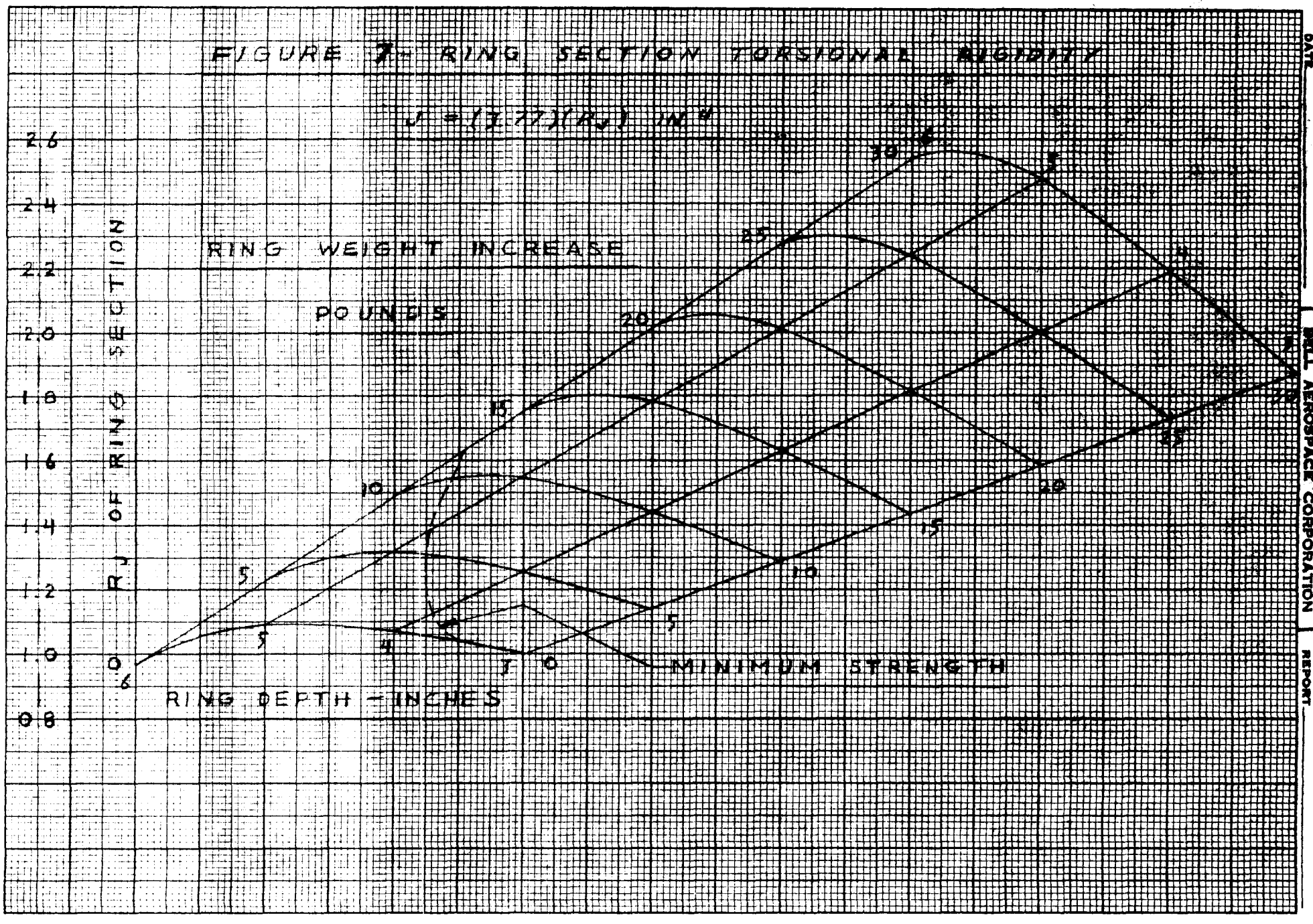


MODEL
DATE
BELL AEROSYSTEMS COMPANY
BELL AEROSPACE CORPORATION
DIVISION OF
REPORT
PAGE 26

K+E 10 X 10 TO THE ½ INCH 359-11
KEUFFEL & ESSER CO. MADE IN U.S.A.

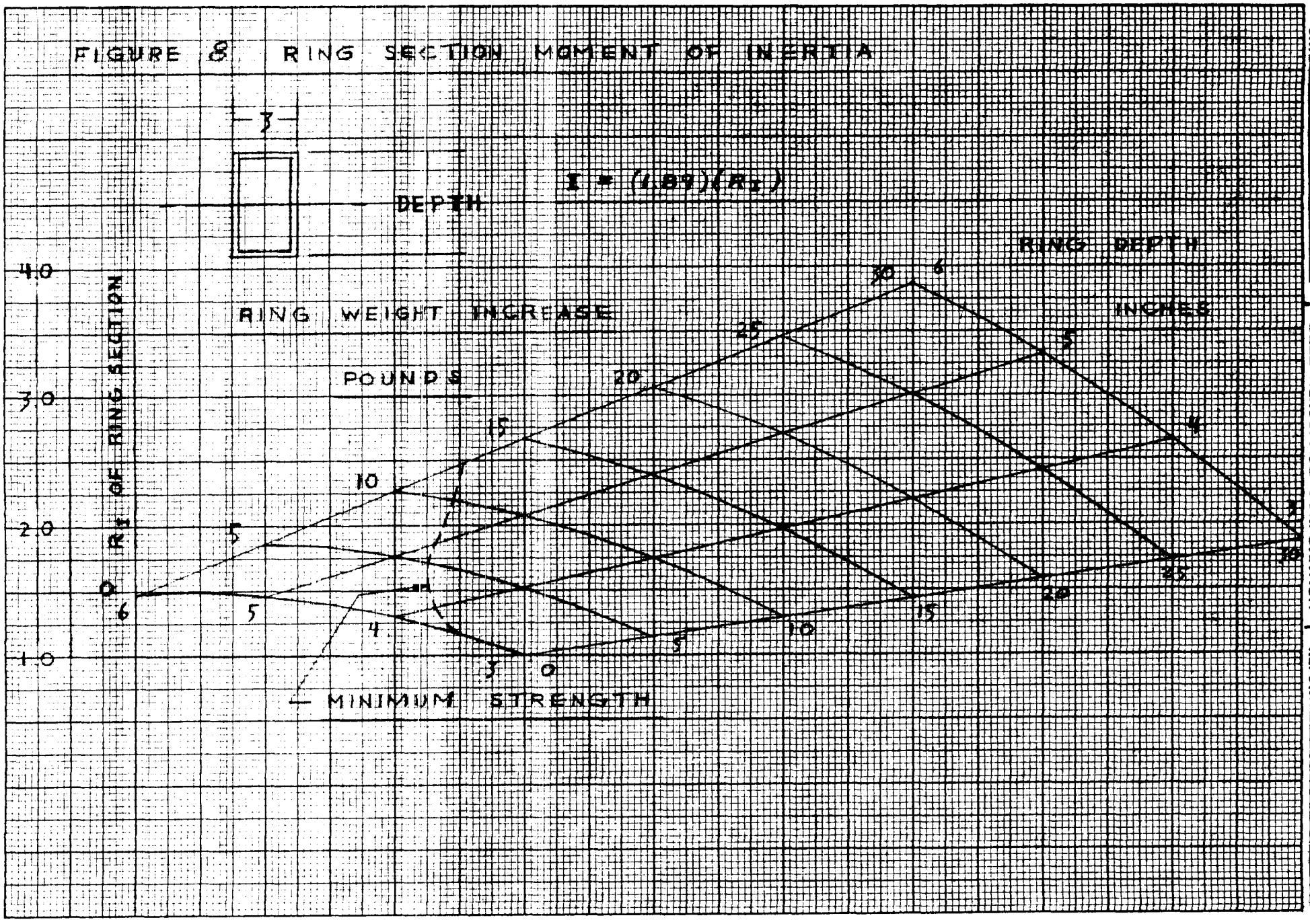


MODEL
DATE
BELL AEROSYSTEMS COMPANY
DIVISION OF
BELL AEROSPACE CORPORATION
REPORT
PAGE

K+E 10 X 10 TO THE ½ INCH 359-11
KEUFFEL & ESSER CO. MADE IN U.S.A.

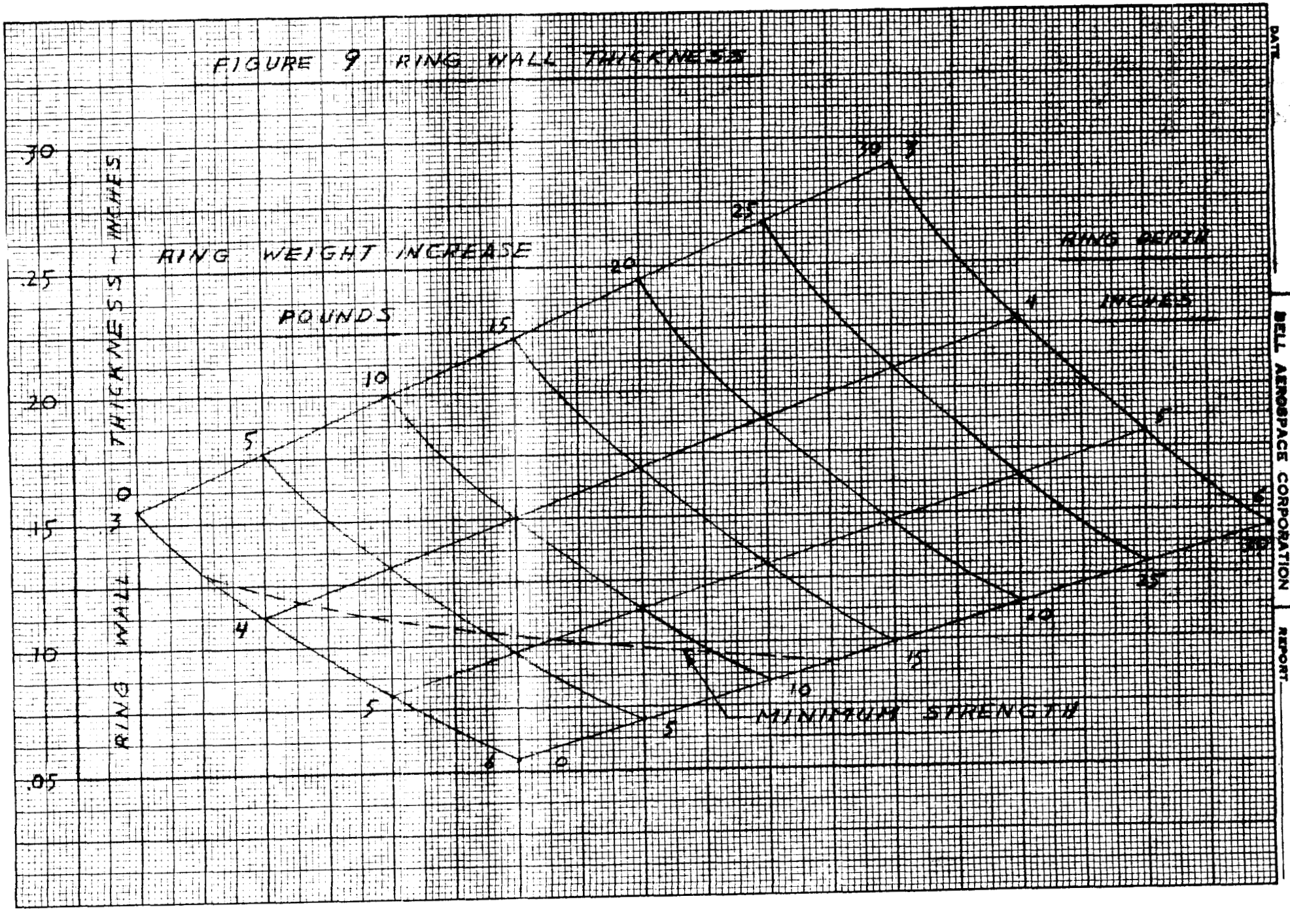


FIGURE 9 RING WALL THICKNESS

MODEL
DATE
BELL AEROSYSTEMS COMPANY
BELL AEROSPACE CORPORATION DIVISION OF
REPORT
PAGE 28

K+E 10 X 10 TO THE ½ INCH 359-11
KEUFFEL & ESSER CO. MADE IN U.S.A.



FIGURE 10 MAXIMUM EFFICIENCY SECTIONS

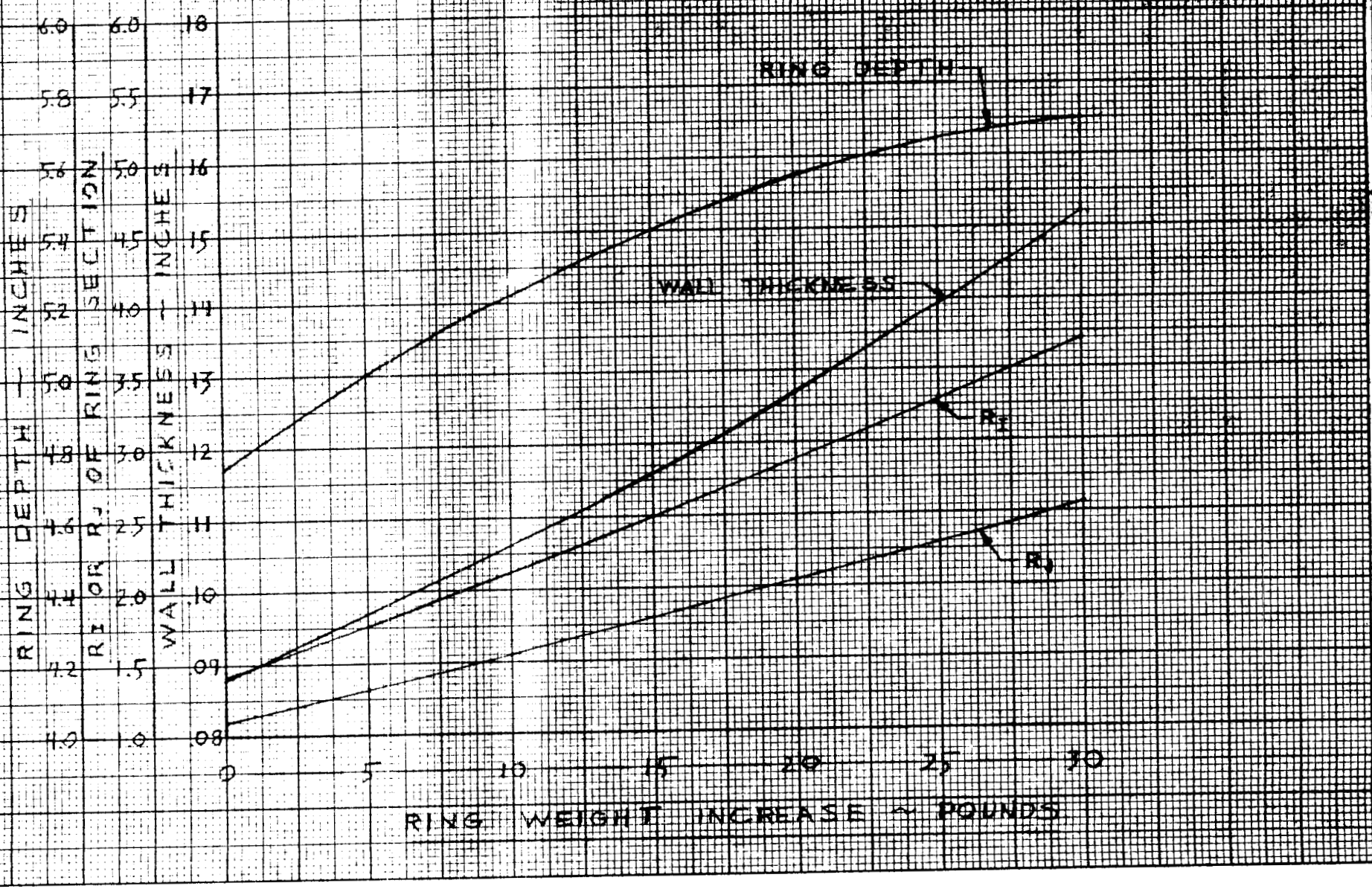

## 5.0 Operations

### Work Statement

5.1 Investigate design requirements to insure operating in winds up to 15 knots.

5.2 Investigate what redesign is necessary to hydraulic system to insure proper servicing during switchover from ground to flight system operation. Investigate limitations of present servicing for hydrogen peroxide and JP-4 and methods to correct any deficiencies. This will include methods such as gaging to determine variable fill levels with minimal effort.

5.3 Investigate availability of presently developed JP-4 and $H_2O_2$ monitoring system for pilot display.

5.4 Investigate optimum ground, pre-flight, postflight and preventative maintenance procedures to insure minimum checkout and turn-around time.

5.5 Investigate methods to improve vehicle balance control. Such methods may require monitoring devices to determine this condition.

### Study Results

5.1 Operation in Winds -

Aerodynamic moments on the vehicle and on the gimballed engine were computed for various flight conditions, including the 60 ft/sec horizontal, plus 30 ft/sec vertical, plus 15 knot winds (see work statement item 2.3). Results are summarized in Bell Aerosystems Company memo 354:66:0103-1:NAP.

It was concluded that the present gimbal

actuators are adequate and that the attitude rockets must be set for at least 30 lbs. thrust, if both sets are used, or at least 60 lbs. if one set is used.

The drag resulting from the specified velocities will require engine tilt angles for drag compensation that are very close to the 15 degree maximum allowable. The 15 degree figure is a result of jet engine lubrication system limitations. However, unlimited operation at a 10 degree tilt is allowed so a brief period at a degree or two beyond 15 degrees should be allowable.

In summary, no problems are anticipated due to operation at the specified velocities with 15 knot winds. However, it is recommended that in-flight measurements of drag and aerodynamic moments on the LLRV be made to confirm theoretical estimates.

5.2 Hydraulic System -

The addition of a hand valve between the accumulator and the return line was recommended to eliminate overflow of the reservoir.

Peroxide Servicing -

A redesign of the peroxide tank top fitting to include an overflow vent standpipe was recommended. The tanks would be filled to spill with final fill controlled by either the liquid fill valves or the

fill vent valves.

An alternate employing permanent sight glasses was rejected because of concern with possible failures during flight.

It was also recommended that the bleed orifices, which NASA removed from cross feed check valves, be reinstated to assure equal levels in both tanks after filling and after ground firing to prime the system.

JP Servicing -

Calibrated overflow probes which retract from the bottoms of the tanks were recommended as means of quickly filling to known levels and as a means of checking residuals.

5.3 Propellant Level Displays -

No suitable continuous level indicating system for peroxide was found. It was recommended that the present system be retained.

It was recommended that the Simmons JP level sensors be replaced with Roylyn magna switches.

5.4 Procedures -

The electronic systems will be modified so that no ground support equipment is required for between flight checks. An improved electronic checkout cart for the initial checkout of the day was recommended. This cart will not be automated but will be arranged for more rapid and error free

checkout.

A redesign of the electronic systems from an AC to a primarily DC system was recommended to simplify checkout and troubleshooting. A repackaging to improve accessibility and to provide replaceable plug-in circuit boards was also recommended. This electronic redesign is considered to give a large potential saving in checkout and maintenance time. Its merits will be most noticeable when troubles are encountered and troubleshooting, repair, or replacement of components is necessary.

It is estimated that these electronics system modifications, change from test jacks to connectors, previously mentioned propellant servicing modifications and vehicle transporter modifications of the next section will reduce between flight time from 1 3/4 hrs. to 1 1/4 hrs. and initial preflight checkout and servicing from approximately 3 ½ hrs. to 2 3/4 hrs. These estimated times will be achieved only if no significant problems occur and will probably not be met on a continuing basis. However, the 1 3/4 and 3½ figures have been achieved, and the redesign should increase the number of checkouts without problems.

No major procedural changes are recommended at this time. However, it is possible that after experience is gained with the LLRV, NASA may be above to justify deletion of some items from the initial preflight checkout of the day and gain

some further small reduction in time.

5.5 Minor modifications to the Sterer JP proportioner to improve its accuracy are considered feasible and are recommended.

The reinstatement of the bleed holes in the peroxide cross feed check valves (see section 5.2) to ensure equal filling of both tanks and equalization during non-rolled flight is recommended. In addition, symmetrical routing of plumbing must be used.

No additional monitoring devices or automatic trim features are recommended.

## 6.0 Ground Support Equipment

### Work Statement

6.1 Investigate methods to simplify, consolidate and reduce GSE to minimum with emphasis on combined packaging and mobility. Consider requirements for concurrent operation at two sites. (No effort should be expended on the control area or van.)

### Study Results

Figure 11 shows a proposed modification of the present LLTV transporter. Modifications include the replacement of the cable lift systems with jack screws to decrease flexibility, an increase in height to permit towing with fully extended landing

struts, extendable support arms for rapid attachment to the LLTV, and a powered rather than manual hoist to speed operation.

Figure 12 shows a preliminary concept of the electronic checkout cart. At the January review it was decided that it should be towable at speeds up to 15 mph over ramps and runways. Thus the casters will be replaced by more suitable pneumatic tires and the undercarriage modified. The lights will be deleted. The cart will include power supplies, test point selector switches, voltmeter, oscilloscope, small analog computer for jet stabilization system checks, simulated pilot warning lights, and lights to indicate which attitude rockets are fired.

Figure 13 shows an initial concept for a modified commercial van to house loose tools, protective garment, etc., and to provide a mobile emergency shower. Although Bell and some FRC personnel believed such a vehicle was desirable, MSC operations personnel indicated that because of permanent facilities that will be very near the Houston operations site, it should not be needed there.

In addition to the above items a list of other suggested ground support equipment was presented at the January review. It was decided that Bell would have design responsibility only for the electronic cart. NASA will be responsible for design

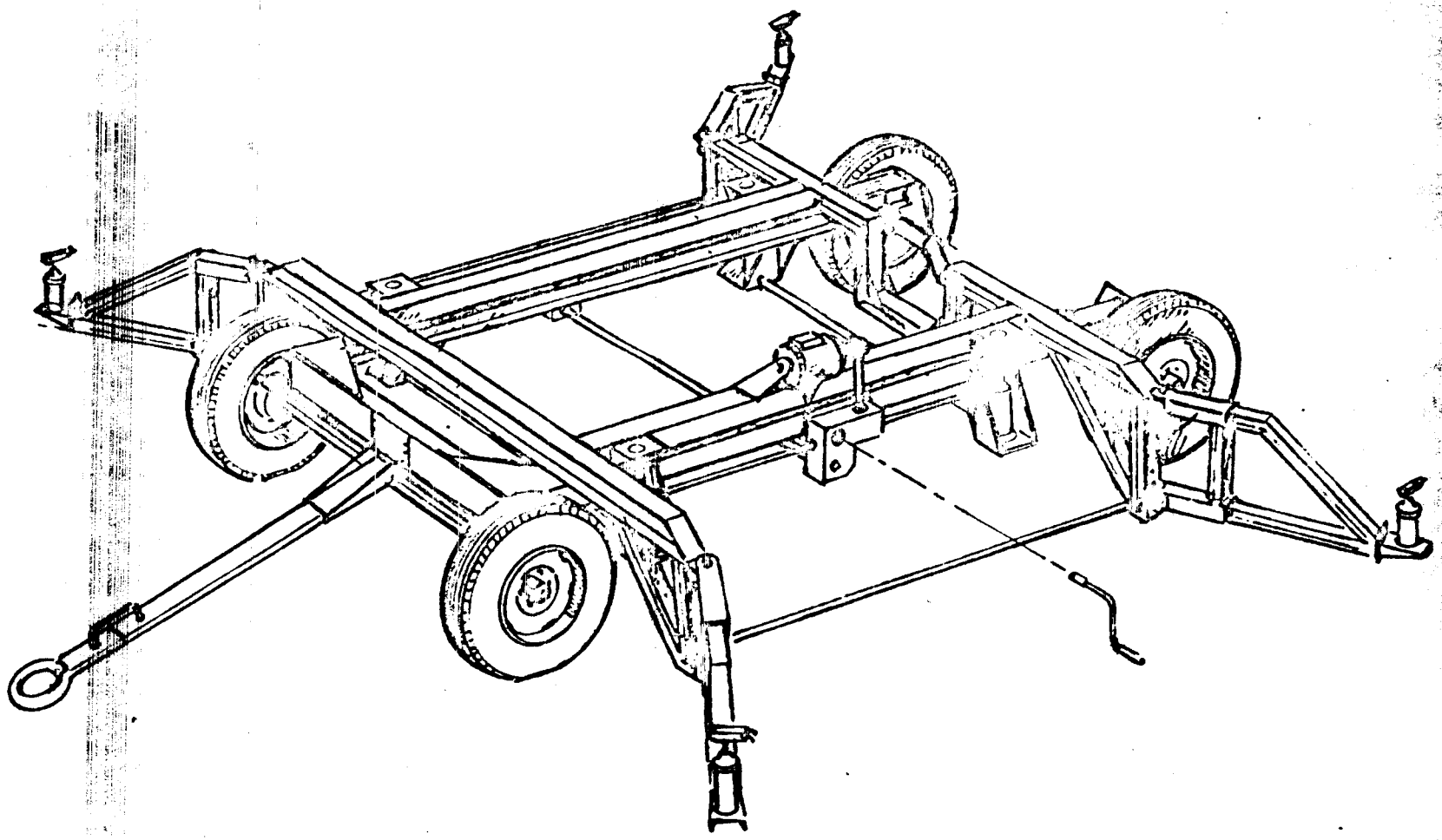

Figure 11

Modified Transporter

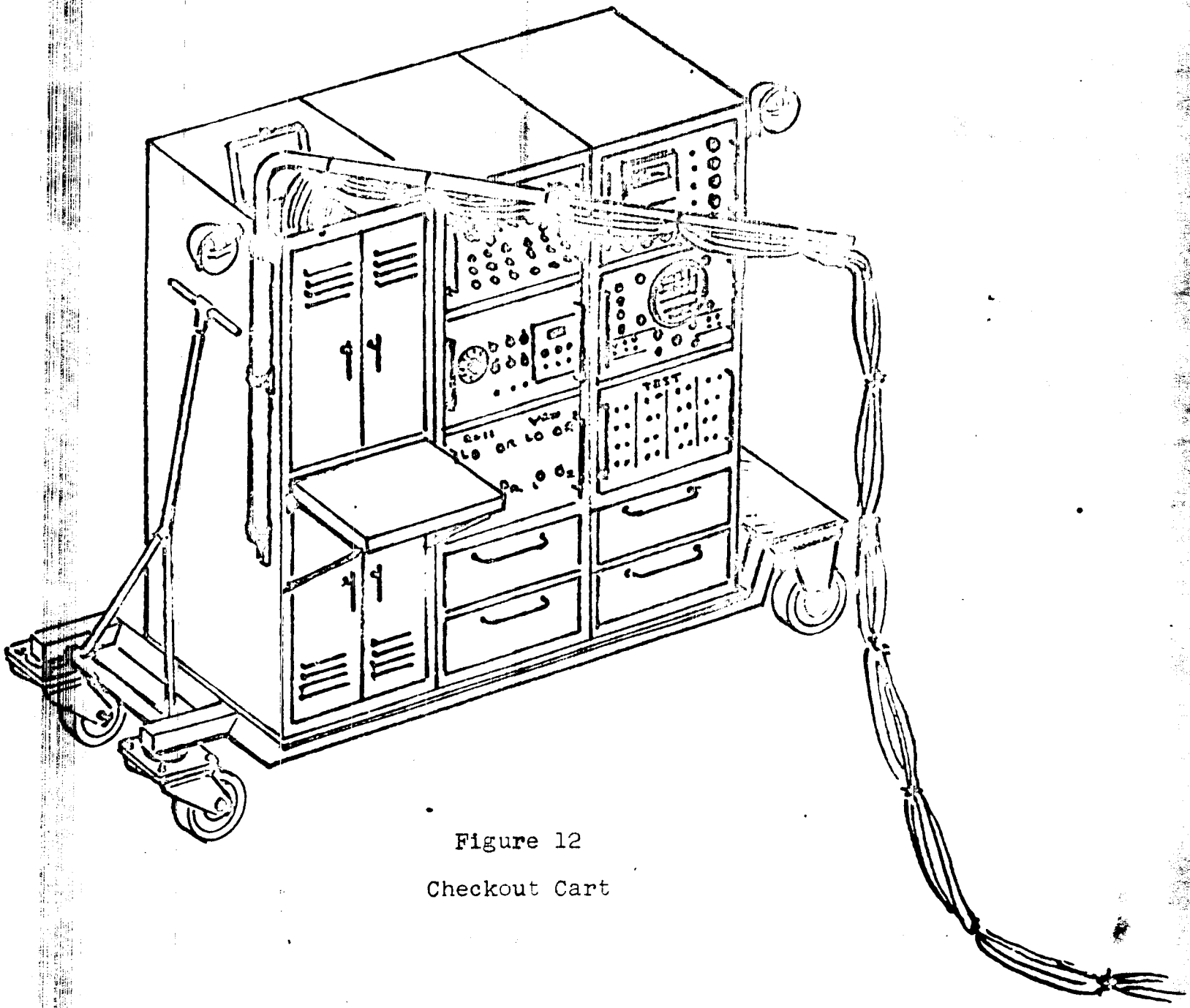


Figure 12

Checkout Cart

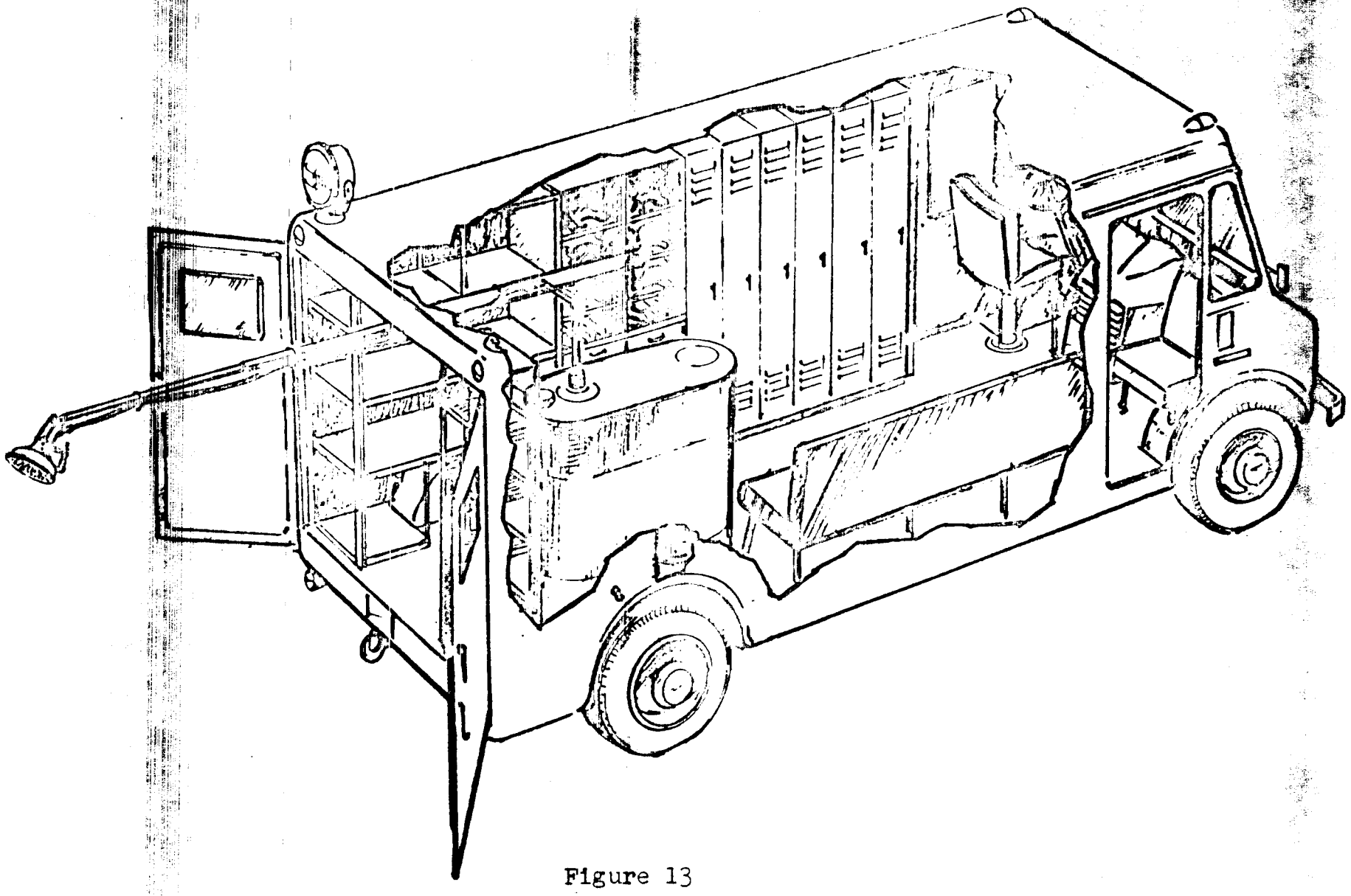

Figure 13

Equipment Van

and/or procurement of other required ground support equipment.

## 7.0 Parts

### Work Statement

7.1 Investigate and submit a report showing a survey of the market showing parts which could be used on a LLTV which have commonality,reliability, availability. There will be a further investigation showing cost, weight penalties, lead time for ordering and other pertinent items to show the LLTV can be maintained to a high degree of operational capability to moderate cost and with a minimum inventory. Some weight penalty will be considered if all other factors reflect favorably. Review specifications of non-standard components to determine feasibility of substituting available components. NASA will provide, within 5 working days from Contractor receipt of contract, a list of approximately 100 parts. Contractor's investigation described above will be limited to this list of parts.

### Study Results

Results of the parts survey, segregated by vehicle systems, are summarized in the following tables. In the time available (4½ weeks from receipt of parts list to end of contract) it was not possible to do an investigation of all possible vendors, to perform analyses of all components to

determine allowable limits of specifications, or to determine the inventory required to support LLTV's. In addition, many vendors were unwilling to quote costs and delivery schedules without written requests including detailed performance and test requirements. Time and funds did not permit preparation of such procurements packages for all items. As a result, there are some blanks in the summary tables, and in some cases figures estimated by Bell personnel have been used. After the January verbal summary report, it was agreed by NASA and Bell personnel that further effort should not be expended to supplement the data presented here.

The most significant outputs of the survey were: a battery that is several pounds lighter than the one being used; the location of a vendor to produce required transformers at substantial cost savings; an improved JP level sensor; and attitude gyros with improved verticality.

Except for the peroxide tank relief valve 7161-472030 which can now be much smaller because of deletion of lift rockets (see section 3.3 ), no specification changes are recommended. It is possible that money could be saved in some cases by changing specifications or by going to alternate components or techniques that were rejected on the LLRV because of weight penalties, reliability questions, or even due to lack of time and money

to thoroughly analyze all possible alternates. However, it is Bell Aerosystems' opinion that any potential savings could easily be overshadowed by additional analyses and testing required, plus the danger of unforeseen problems that can arise whenever a change is made.

For example, the hydraulic gimbal actuators could use pressure pickups and electrical signals instead of internal hydro-mechanical pressure feedback. Also, some relaxation of linearity requirements could probably be tolerated. However, in either case significant amounts of analysis, simulation, and testing would be required to substantiate such changes, and them redesign costs would be involved. Because this actuator is such a basic element in the lunar simulation, retention of the current design is recommended.

A-1

ELECTR

LLTV CO

| | BELL P/N | PART NAME | PRESENT VENDOR | | |
|---|---|---|---|---|---|
| | | | P/N & NAME | COST | WT LBS |
| 1. | 531-075-113-1 ? | Voltage Amplifier | Wems, Inc. 0483 | $187 | |
| 2. | 531-075-112-1 ? | Valve Driver | Wems, Inc. 0482 | $187 | |
| 3. | | Booster Amplifier | Reeves, Inst. ART-151-400P | $335 | |
| 4. | | Operational Amplifier | Systron Donner 3801 | $450 | |
| 5. | | Potentio-meter Clutch Module | Technology Inst. Corp. MC11-60 | $286 | |
| 6. | | Motor | Clifton Precision Prod. AYL-13-AS-5 | $125 | |
| 7. | | Transformer | Arnold Mag-netics 533-56CT-ModA | $28 | 3.9 oz. |
| 8. | 17-09517-1<br>-09518-1<br>-09519-1<br>-09569-1<br>-09539-1 | Transformers | Bell Aero-systems | $346<br>328<br>556<br>383<br>291 | .49<br>.67<br><br><br>1.0 |
| | | | | | |

ONIC SYSTEMS

MPONENT SUMMARY

2

| | ALTERNATE VENDO | | |
|---|---|---|---|
| LEAD TIME | P/N & NAME | COST | WT LBS |
| | | * | |
| | | * | |
| | Kearfott C703100003 | | 8 oz. |
| | Philbrick | * | |
| | American Precision Industries, Buffalo | * | |
| | John Oster, Kearfott, Servomech-anisms, Inc. | * | |
| | Torwico TW-25D-56T | around $25 | 4.8 oz. |
| | Dynamic Components | $ 50<br>50<br>110<br>52<br>110 | .49<br>.67<br><br><br>1.0 |
| | | | |

*Alternate vendors require spec. control drwg. for quotations.

A-3

| R | | |
|---|---|---|
| LEAD TIME | INTERCH. | REMARKS |
| | | Selected for low wt. and because was being mfg. in production quantities. Mounted on P. C. boards; therefore recommend only identical units be used. |
| | | " |
| | No | Functionally interchangeable with very minor mods. |
| | No | |
| | | Special unit; not off the shelf. |
| | | " |
| | No | Replacement is electrically interchangeable. |
| 8 weeks | Yes | Replacements to be built to Bell Spec. Control Drwg. |
| | | |

8-D

ELECTRO

LLTV COM

| | BELL P/N | PART NAME | PRESENT VENDOR | | | |
|---|---|---|---|---|---|---|
| | | | P/N & NAME | COST | WT LBS | |
| 9. | | Directional Gyro | Sperry, Phoenix DG 304 | $3463 | 3.75 | |
| 10. | | Vertical Gyro | Electronic Specialties NV5004A | $2000 | 2.5 | |
| 11. | | Vertical Gyro (Resolver Pickoffs) | Electronic Specialties NV5003A | $2800 | 2.5 | |
| 12. | | Rate Gyro | U.S.Time 301225 | $1133 | 1.1 | |
| 13. | | Accelero-meter | U.S.Time 301230 | $938 | 5 oz. | |
| 14. | 17-08222-3 | Auto Throttle | Bell Aero-systems | $11,224 | | |
| 15. | | Transformer | Arnold 532-26CT-Mod A | $21.70 | 1.1 oz. | |
| 16. | | Transformer | Arnold 535-767CT-Mod A | $15 | 0.5 oz | |

ONIC SYSTEMS

ONENT SUMMARY

2

| LEAD TIME | ALTERNATE VENDO | | |
|---|---|---|---|
| | P/N & NAME | COST | WT LBS |
| | Kearfott C702215002 | appr. $5500 | 5.5 |
| | Kearfott C702702001 or C702115002 | Appr. $3000 Appr. $5500 | 5.5 5.5 |
| | Kearfott C702115002 | Appr. $5500 | 5.5 |
| | Kearfott C702023 series | Appr. $1200 | 5 oz. |
| | Unico Controls or Kearfott C702401 | $850 Appr. $1100 | 3 oz. |
| | Lear Siegler 3071C-1 SpecTS 3071C-1 | | |
| | Torwico TW9D26T | Appr. $15 | 2.3 oz |
| | Torwico TW3D26T | Appr. $14 | 1.1 oz |

B-(2) 3

| )R | | |
|---|---|---|
| LEAD TIME | INTERCH. | REMARKS |
| 3 months | Yes | Replacement has performance equal to or better than original. Slight mounting mods. may be required. |
| 3 months | | Better performance than present unit. Wts. include vibration isolators. Alternate replacement does not require isolators. Performance better than present unit. |
| 3 months | | Replacement does not require vibration isolators. Performance better than present unit. |
| 2 months | | Alternate has same self test features as present unit. Null also approx. the same. |
| 60 days | No | Alternate has desirable self test feature |
| | No | Lear unit has similar performance but does no have slip clutch or universal joint. Bendix may be an alternate source. |
| | No | Alternate is electrically interchangeable. |
| | No | " |

C-1

ELECT

LLTV C

| | BELL P/N | PART NAME | PRESENT VENDOR | | |
|---|---|---|---|---|---|
| | | | P/N & NAME | COST | WT LBS |
| 17. | | Speed Reducer | Bowmar 11-795-29-01 | $128 | |
| 18. | | Capacitor XTV108T040P0B | Mallory | | |
| 19. | | Inverter | Leland Airborne MGE-93-200-2 | | |
| 20. | | Synchro | Kearfott RS911-2H | $37.50 | |
| 21. | | Relay | Couch Ordinance 2R04C460E | $12.60 | |
| 22. | | Transformer | Torwico TW6D115T | $10 | 2 oz |
| 23. | | Transformer | Torwico TW3D115T | $14.50 | 1.1 oz |
| 24. | | Transformer | Torwico TW3D26T | $13.30 | 1.1 oz |

'RONIC SYSTEMS

MPONENT SUMMARY

2

| | ALTERNATE VENDOI | | |
|---|---|---|---|
| LEAD TIME | P/N & NAME | COST | WT LBS |
| | John Oster or Kearfott | * | |
| | Sprague | | |
| | Bendix 32B172-1 | $425 | 7.6 |
| | CPPC NGC-11-H-8 | $65 | |
| | | | |
| | Arnold 532-115CT | Appr. $16 | 1.1 oz |
| | Arnold 530-115CT | Appr. $13 | 0.6 oz |
| | Arnold 530-26CT | Appr. $13 | 0.6 oz |

C-[redacted] 3

| LEAD TIME | INTERCH. | REMARKS |
|---|---|---|
| | | This unit is used with item 6. Special unit;not off the shelf |
| | | Awaiting reply from Sprague. This is a MIL STD part. |
| 180 days | | Slight wiring mod. required. |
| 120 days | | |
| | | |
| 8 weeks | | Electrically but not mechanically interchangeable. |
| 8 weeks | | |
| 8 weeks | | |

D-1



| | BELL P/N | PART NAME | PRESENT VENDOR | | | |
|---|---|---|---|---|---|---|
| | | | P/N & NAME | Cost | Wt # | LEAD TIME |
| 1. | 7161-472-002-1 | $H_2O_2$ Vent Valve | Pneu-Hydro P/N 611967 | $310.ea | .6 lb | 10-12 Wks. |
| 2. | 7161-472-003-3 | $H_e$ Press X-Ducer | Bourns Co. P/N 2007202 902 | $480.ea | .20 | 10-12 Wks |
| 3. | 7161-472-035-1 | T.C.Press. X-Ducer | Bourns 2007238001 | $550.ea | .35 | 10-12 Wks |
| 4. | 7161-472-010-1 | $H_e$ Filter | Aircraft Porous Media AC-2907-85x1 | $180.ea | .70 | 8-10 Wks |
| 5. | 7161-472-025-1 | $H_e$ CK Valve | James Pond Clark 264T2-8TT-2.5 | $170.ea | .35 | 6-8 Wks |
| 6. | 7161-472-045-1 | Lift CK Valve Restrictor | James.Pond & Clark 264T2-16TT (.081) | $242.ea | 1.45 | 6-8 Wks |
| 7. | 7161-472-070-1 | Lift CK Valve | James.Pond & Clark 264T2-16TT-5 | $[illegible].ea | 1.5 | 6-8 Wks |
| 8. | 7161-472-100-1 | ACS CK Valve Restrictor | James.Pond Clark 264T2-8TT (.062) | $140.ea | .35 | 6-8 Wks |
| 9. | 7161-472-020-1 | $H_e$ Cross-Over Valve | Consolidated Controls 143W61 | $968. | 1.1[illegible] | 12 Wks |
| 10. | 7161-472-015-1 | ACS Shut-Off Valve | Consolidated Controls 1[illegible]3W58 | $[illegible]. | 1.3 | 12 Wks |

ET SYSTEM

ONENT SUMMARY

2

| ALTERNATE VENDOR | | | | |
|---|---|---|---|---|
| NAME & P/N | COST | WT# | LEAD TIME | I |
| Flodyne | $894. | .7 | 6 Wks. | |
| Consolid. Controls 113W83 | $705. | .72 | 11 Wks. | |
| Colvin Lab Giannini | | | | |
| Colvin Lab Giannini | | | | |
| HR & M 11-10326 | $603. | .7 | 8 Wks | |
| Spartan Aircraft | | | | |
| Spartan Aircraft | | | | |
| Spartan Aircraft No. 840 | $507. | | 8 Wks | |
| Spartan Aircraft | | | | |
| Pneu-Hydro 231776 | $720 | 1.2 | 10-12 Wks | |
| Flodyne 3116 | $1,0[illegible]2 | 1.4 | 10-12 Wks | |
| Pneu-Hydro 23177[illegible] | $1,040 | 2 | 10-12 Wks | |
| Pyrodyne 4780 | | 4.5 | 10-12 Wks | |

D-3

| NTERCH. | REMARKS |
|---|---|
| Yes | Selected on Basis of Cost. |
| Yes | |
| Yes | Similar to units on Dynasoar on which Environ. Testing had been completed. Reason for selection. |
| Yes | " " " " " "<br>" " " " " " |
| | Selected this vendor on the basis of cost and the availability of an off-the-shelf item. |
| | Off-the-shelf design. No Eng. Cost. Modify present unit by the addition of O-ringsshroud. |
| | " " " " " "<br>" " " " " "<br>" " " " " "<br>Cost includes $H_2O_2$ Conditioning. |
| | " " " " " "<br>" " " " " "<br>" " " " " " |
| | " " " " " "<br>" " " " " "<br>" " " " " " |
| Yes | Had Devel. similar unit for Dyna-Soar, ACS. |
| Yes | |
| Yes | " " " " " " |
| Yes | " " " " " " |

ED

| | | | PRESENT VENDOR | | | |
|---|---|---|---|---|---|---|
| | BELL P/N | PART NAME | NAME & P/N | COST | WT # | LEAD TIME |
| 11. | 7161-472040-1 | Lift Shut-Off Valve | Flodyne [illegible] | $1170.ea | 3.72 | 10 Wks |
| 12. | 7161-472050-1 | Hi-Press Relief | James P[illegible]nd & Clark P[illegible]3-344 | $173.[illegible] | .44 | [illegible] |
| 13. | 7161-472005-1 | Orifice | [illegible] Mfg [illegible] | $.[illegible] | .47 | [illegible] |
| 14. | [illegible]-472075-1 | MS Solenoid Valve | [illegible] | [illegible] | [illegible] | [illegible] Wks |
| [illegible] | 7161-472045-1 | Temp. Probe | Lewis Inc. ([illegible]) | $[illegible] | [illegible] | [illegible] |
| [illegible] | 7161-472115-1 | Press. SW. | [illegible] | | [illegible] | [illegible] |
| 17. | 7161-47[illegible]-1 | Fl. Orifice | [illegible] | $[illegible] | [illegible] | [illegible] |
| [illegible] | 7161-472090-1 | Low Level [illegible] | [illegible] | $4[illegible] | .47 | [illegible] |
| [illegible] | [illegible]-472091-1 | [illegible] | [illegible] | $4[illegible] | [illegible] | [illegible] |
| [illegible] | [illegible]-47[illegible]-1 | [illegible] | [illegible] | $3[illegible] | [illegible] | [illegible] |
| [illegible] | [illegible] | [illegible] | [illegible] | $[illegible] | [illegible] | [illegible] |
| [illegible] | 7161-47[illegible]-1 | Variable Orifice | [illegible] | $[illegible] | [illegible] | [illegible] |
| 24. | [illegible] (New Bell P/N) | [illegible] | [illegible] | $[illegible] | [illegible] | [illegible] |

2

## ALTERNATE VENDOR

| NAME & P/N | COST | WT # | LEAD TIME |
|---|---|---|---|
| Consolidated [illegible]rols 143W60 | $1050. | 6 | 10 Wks |
| Pneu-Hybro 23176 | | 2 | 10 Wk |
| Spartan #299 | $202 | .2 | 10 Wk |
| Lec Jet Co. | | | |
| National Water Lift | | | |
| Transonic Rosemont | | | |
| ----- | | | |
| Lec Jet Co. | | | |
| ----- | | | |
| ----- | | | |
| [illegible] | | | |
| [illegible] 143W60 | | | |
| Flodyne | | | |
| Consolidated | | | |
| Flodyne | | | |
| Flodyne | | | |
| Barieton Controls 3[illegible]5-001-1 | $1500 | 5.5# | 12 wks |

E-3

| INTERCH. | REMARKS |
|---|---|
| Yes | |
| Yes | |
| Yes | Low cost, off-the-shelf item. No Eng. Cost cond. for $H_2O_2$ service. |
| No | Remain with present vendor. Low cost simple design. |
| | Low cost - unit designed and developed on SCOUT program. |
| | Low cost - unit design and dev. on Dyna-Soar program. |
| | Only company to quote - dev. required by new vendor. |
| NO | Remain with present vendor - low cost - simple design. |
| | Only design proved compatible with $H_2O_2$. Stay with present vendor. No chg to unit. Use [illegible] link. |
| | Same as above (item 1.) |
| | [illegible] from basic design. |
| | " " " " |
| | Level. required if alternate vendor selected. Low cost. |
| | Selected on basis of cost, dev. req'd if alt. vendor selected. |
| | Carleton Reg. is spring-loaded and would required dev. time. Marotta req. s.e. dwg. some test. presently on LLRV-(oversized). |

| | BELL P/N | PART NAME |
|---|---|---|
| 25. | 7161-472-125-1 | Relief $H_2O_2$ Valve |
| 26. | 7161-472-130-1 | T.C. Xducer 90# |
| 27. | 7161-472-135-1 | FlowLimiter |
| 28. | 7161-472-140-1 | 3-Way 2 Pos. Valve Motor-Up |
| 29. | 7161-472-145-1 (New Bell P/N) | Disconnect $H_2O_2$ Fill |
| 30. | 7161-471002 | He. Tank |
| 31. | 7161-471001 | $H_2O_2$ Tank Assembly |
| 32. | 7161-471003 | $H_2O_2$ Tank Shell |

2

| PRESENT VENDOR | | | |
|---|---|---|---|
| NAME & P/N | COST | WT | LEAD TIME |
| HCMPG Co. P/N 6417 | $1000. | .90# | 10 wks |
| Giannini Controls 461322-A-A-4050 | $500. | .19# | 10 wks |
| | | | |
| Pneu-Hydro | $700. | | |
| Weatherhead (20682-5 Eastern Aircraft Prod.) | $254. | | 60 days |
| Menasco | $2700 | | 20 weeks |
| Bell | $7500 | | 19 weeks |
| Airtek | $4500 | | 17 weeks |

3

ALTERNATE VENDOR

| NAME & P/N | COST | WT | LEAD TIME | IN |
|---|---|---|---|---|
| Oslmec | | | | |
| Bourns Model 723 | $550. | .35# | 10-12 wks | In ch |
| | | | | |
| | | | | |
| | | | | |
| | | | | |
| | | | | |
| | | | | |

P-(4)

| TFRCH. | REMARKS |
|---|---|
| | Required design and development time. **This would replace present tank relief. 7161-472[redacted]** |
| ter-<br>ange | This is new, required - design and developement time req. |
| | This is Bell design - require design and development time. |
| | This is new item - Design and development time required. **Would be used if only 8 attitude rockets were used.** |
| | **Part added to system by NASA.** |
| | **No interchangeable tanks. Any substitutes significantly heavier. Similar tanks recently priced at $3300 and up.** |
| | Tank to be enlarged 20%. No existing tanks. |
| | " |

G①

HYDR

LLTV CO

| | BELL P/N | PART NAME | PRESENT VENDOR P/N & NAME | COST | WT LBS |
|---|---|---|---|---|---|
| 1. | 7161-390002 | Pump | American Brakeshoe 57079 ABS | $885 | 1.80 |
| 2. | | Filter | Aircraft Porous Media AC3255-4APM (MS-28896-4) | $179 | - |
| 3. | 7161-390001-1 | Gimbal Actuator | Hydraulic Research & Mfg. 30110350-001 | $10,750 | 8.8 |
| 4. | 7161-390003 | Reservoir | Olin Dixon | $200 | 1.5 |
| 5. | | Solenoid Valve | Hyd. Research & Mfg. 60600-4 | $150 | 1.3 |
| 6. | | Relief Valve | Spartan 203-45-2750 LS | $75 | .07 |
| 7. | | Check Valve | Spartan 126-45 LS | $15 | .05 |
| 8. | | Check Valve | Spartan 103-45 LS | $15 | .05 |
| 9. | | Shutoff Valve (Manual) | Hyd. Research & Mfg. 38200 | $75 | .5 |
| 10. | | Accumulator | QPL List MS-28700-2 | $63 | 5.4 |

AULIC SYSTEM

MPONENT SUMMARY

2

| LEAD TIME | ALTERNATE VENDO | | | |
|---|---|---|---|---|
| | NAME & P/N | COST | WT. # | |
| 90-120 days | | | | |
| " | Any vendor on QPL List | | | |
| " | | | | |
| " | | | | |
| " | MC Mfg. | | | |
| " | MS-28887CD4 | | .5 | |
| | Circle Seal 277T-4TT | | .17 | |
| | " | | .17 | |
| | | | | |
| | QPL List | | | |

G-3

| R | | |
|---|---|---|
| LEAD TIME | INTERCH. | REMARKS |
| | | No reasonable alternate due to high speed and special compensator setting. |
| | Yes | |
| | | Non recurring costs make HR&M only reasonable vendor. |
| | | |
| | No | Alternate requires new bracket. |
| | | Miniaturized type for LLRV. |
| | | Special for LLRV (T-type). |
| | | Special for LLRV (miniature) |
| | | |
| | Yes | |

H-1



| | BELL P/N | PART NAME | PRESENT VENDOR | | |
|---|---|---|---|---|---|
| | | | P/N & NAME | COST | WT. LBS |
| 11. | | Pressure Switch | Hayden 15456 | $55 | .18 |
| 12. | | Swivel Fitting | Dumont H0210-22304D | $15 | .05 |
| 13. | | Nipple | Wiggins 3Y6055E4A | | .08 |
| 14. | | Dust Cap | Wiggins 3Y6054E4A | | .1 |
| 15. | | Plug | Wiggins 3Y6009E4A | | .03 |
| 16. | | Socket | Wiggins 3Y6000E4A | $25 | .10 |
| 17. | | Pressure Gage | Tavco 214405 | $25 | -- |

AULIC SYSTEM

MPONENT SUMMARY

2

| | ALTERNATE VEND | | |
|---|---|---|---|
| LEAD TIME | NAME & P/N | COST | WT. LBS |
| | | | |
| | Dumont H0210-22304C<br>Dunbar Kapple ? | $20 ? | .15 |
| | Aeroquip | | |
| | " | | |
| | " | | |
| | " | | |
| | Rochester Mod. 6914 | | |

H - 3

| OR | | |
|---|---|---|
| .LEAD TIME | INTERCH. | REMARKS |
| | | |
| | Yes | Present swivel rated superior to alternates. |
| | No | Alternates must be compatible with test equipment. |
| | " | |
| | " | |
| | " | |
| | Yes | |

I-1

JET EN

LLTV COM

| | BELL P/N | PART NAME | PRESENT VENDOR | | |
|---|---|---|---|---|---|
| | | | P/N & NAME | COST | WT LBS |
| 1. | | Solenoid Valve (Throttle Dump) | Marotta MV-4 | | |
| 2. | 7161-435001-9 | Throttle Compensator | NASA | | |
| 3. | | Throttle Actuator | North American 212-58048 | | |
| 4. | 7161-424010-1 | Tank | Benson Mfg. 158101 | $4450 ($3100 tooling) | 9 |
| 5. | 7161-424009 | Fuel Proportioner | Sterer 25990-1 | $995 | 3.1 |
| 6. | 7161-424037-1 | Level Sensor Control | Simmons Precision 384301-003 | $207 | 0.5 |
| 7. | | Level Sensor | Simmons Precision 384422-003 | $240 | 0.5 |
| 8. | | JP4 Check Valve | Circle Seal 869A-12TT6 | $36.70 | 0.5 |
| 9. | | Manifold | Weatherhead 105-61664 | $10 est. | 0.1 |
| 10. | | Air Filter | Aircraft Porous Media ACK-3103-410 | $78 | 0.1 |
| | | Fuel Filter | Aircraft Porous Media AC 1527-1210 | $198 | 0.81 |

GINE SYSTEMS

PONENT SUMMARY

2

| | ALTERNATE VEND | | |
|---|---|---|---|
| LEAD TIME | P/N & NAME | COST | WT LBS |
| | •General Controls<br>•Whittaker<br>•Parker | $250 est. | 2 est. |
| | HR&M and above | | 2 est. |
| | " | | 2 est. |
| 16 weeks | Airtek Dynamics | | |
| 120 days | None Known | | |
| 16-18 weeks | Roylyn "Magna-switch" | $200 est. | |
| | " | $150 est. | |
| 6-8 Weeks | Spartan | | |
| 6-8 weeks | QPL List | | |
| 7-9 weeks<br>" | | | |

I - 3

| )R | | |
|---|---|---|
| LEAD TIME | INTERCH. | REMARKS |
| 12 week est. | Probably | Present unit selected by NASA. Marotta does not recognize part number. |
| 12 week est. | No | Special item. Spec control drawing required |
| 16 week est. | No | Present unit selected by NASA. No. American does not recognize number. Special Unit. Special control drawing required. |
| | | Modifications required for new level sensor and overflow probe. |
| | | Modify to increase accuracy. |
| | No | Alternate is new concept. |
| 16-18 weeks | | " |
| | Yes | Recommended staying with Circle Seal. Units apparently worked well. |
| | | Weatherhead now uses MS21960-4L designation. |
| | | Change to ACK 3103-424X4<br><br>AC 1527-1210 was special for NASA. Is air filter modified for fuel. |

J-(1)



| | BELL P/N | PART NAME | PRESENT VENDOR P/N & NAME | COST | WT LBS |
|---|---|---|---|---|---|
| 11. | 7161-434014-1 | Tachometer | Gen. Electric 8DJ8CAE-2 | $300-400 est. | .81 |
| 12. | 7161-434011-1 | E. G. T. indicator | Howell BH185R33 | $925 | 0.6 |

INE SYSTEMS

PONENT SUMMARY

2

| LEAD TIME | P/N & NAME | ALTERNATE VENDOR COST | WT LBS | |
|---|---|---|---|---|
| | Kollsman E1559704-006 | $300-400 est. | | |
| | Weston or Lewis Eng'r. | $60 | | |

J-3

| LEAD TIME | INTERCH. | REMARKS |
|---|---|---|
| | Yes | Awaiting vendor replies. |
| 90 days | Yes | MS 28006-1 indicator would work. No warning light; no external switch. NASA selected Howell over Weston for LLRV. |

K 7

ELECT

LLTV CO

| | BELL P/N | PART NAME | PRESENT VENDOR P/N & NAME | COST | WT. LBS. |
|---|---|---|---|---|---|
| 1. | | Battery | Sonotone 23185 Type MM12 | $475 | 19 |
| 2. | | Generator | Leland DGH-245-1 | $2886 (Incl. Regulator) | 32 |
| 3. | | Voltage Regulator | Leland CSV-1178-1 | see above | 1 3/4 |
| 4. | | Inverter Note - 1500VA inverters no longer std. 2500 VA units are too large for our generator | Bendix 1518-8B | $984 | 34 |
| 5. | | D. C. Ext. Power Connector | Cannon CA00AQ 32-15 | $18.44 | 0.38 |
| 6. | | Warning Lights | Grimes 65-0128-1 | $59.10 | 0.43 |

RICAL SYSTEM

MPONENT SUMMARY

2

| LEAD TIME | ALTERNATE VENDO NAME & P/N | COST | WT. LBS |
|---|---|---|---|
| 4 weeks | Gulton 24V07 | $472 | 30 |
| | Gulton 24K08 | $394 | 26 |
| | Gould 24 cell M-P series 7-0 SCcell | $153 | 11½ |
| 120 days | | | |
| 120 days | | | |
| 8-12 Weeks | Lear Siegler | $750 | 44 |
| | Leland | $850 | 39.7 |
| | Leland | $850 | 42 |
| 10 weeks | QPL List AN 2552 | | |
| 10 weeks | | | |

K-3

| OR LEAD TIME | INTERCH. | REMARKS |
|---|---|---|
| 8 weeks | No | Sealed 7 amp. hr. Sonotone is vented 6½ amp. hr. |
| 6 weeks | No | Vented 8 amp. hr. |
| 6 weeks | No | Sealed 7 amp. hr. |
| | | Only available generator that meets LLTV load, speed, and self-cooling requirement and that can be installed without redesign of jet engine bell mouth. |
| | | Required for compatibility with generator. |
| 17-21 wk. | No | No longer in Production Regulator not static. |
| 17 wk. | No | No longer in production Regulator not static. Min. 10 units. |
| 17 wk. | No | No longer in production Regulator not static. Min. 10 units. |
| | | Replace with AN part. |
| | | 2 units have special voltage sensing circuit. Remainder have test diodes. |

| | BELL P/N | PART NAME | PRESENT VENDOR | | |
|---|---|---|---|---|---|
| | | | P/N & NAME | COST | WT. LBS |
| 6. cont'd | | | 65-0129-1 | $120.50 | 1.00 |
| | | | 65-0130-1 | 18.65 | .06 |
| | | | 65-0130-3 | 39.10 | .06 |
| | | | 65-0139-1 | 113.75 | .56 |

RICAL SYSTEM

PONENT SUMMARY

2

| | ALTERNATE VENDO | | |
|---|---|---|---|
| LEAD TIME | NAME & P/N | COST | WT. LBS. |
| 10 weeks | | | |
| " | | | |
| " | | | |
| " | | | |

L-3

| LEAD TIME | INTERCH. | REMARKS |
|---|---|---|
| | | Test Diode Circuits Only<br>Test Diode Circuits Only<br>Special Voltage Sensing Circuit<br>2 units have special voltage sensing circuit. Remainder have test diodes. |

## 8.0 Weight and Performance

Table I summarized estimated weight, c. g., and moment of inertia changes associated with changes discussed in earlier sections. Also presented are the total changes due to items tentatively selected for inclusion in the LLTV, and an estimated maximum gross takeoff weight.

NASA, FRC supplied the following jet engine thrust data. This was based on a test of CF-700-2B S/N 001 in the vertical position at Edwards.

| Thrust (lbs) | Temp. (°F) |
|---|---|
| 4395 | 60 |
| 4370 | 65 |
| 4335 | 70 |
| 4300 | 75 |
| 4260 | 80 |
| 4220 | 85 |
| 4175 | 90 |
| 4120 | 95 |
| 4060 | 100 |
| 3990 | 105 |
| 3920 | 110 |

On the basis of this thrust data, the LLTV at sea level will be capable of takeoff with a thrust to weight ratio of 1.05 at ambient temperatures up to approximately 92 degrees. By off loading 60 lbs. of JP 4 the takeoff temperature could be extended to 98 degrees.

The reader is cautioned that the engine data presented here indicates a greater engine capability than GE has been willing to guarantee to Bell Aerosystems. Therefore, a further investigation to firmly establish the thrust capability of the engines that will be used for the LLTV is recommended.

TABLE I

WEIGHT, BALANCE AND INERTIA STATEMENT

Contractual Work Statement and John Rykens Memo Dated 27 December 1965

| | | + aft. | + right | + up | Roll | Pitch | Yaw |
|---|---|---|---|---|---|---|---|
| | WEIGHT | HORIZ. C.G. CHANGES | LATERAL C.G. CHANGES | VERTICAL C.G. CHANGES | $I_x$ INERTIA | $I_y$ INERTIA | $I_z$ INERTIA |
| | lbs. | inches | inches | inches | slug-ft$^2$ | slug-ft$^2$ | slug-ft$^2$ |
| 1.0 COCKPIT | | | | | | | |
| 1.1 Cockpit floor modif. to provide greater visibility (Drwg. 7161-158502) | +1.5 | -.02 | 0 | -.05 | | | |
| 1.2 Console | 0 | | | | | | |
| 1.3 New cockpit enclosure | +41.0 | -.75 | +.05 | 0 | +2.6 | +43.9 | +43.9 |
| 2.0 ELECTRONICS * | | | | | | | |
| 2.1 (a) Remove ground adjustments | -3.0** | -.10 | 0 | -.01 | | | |
| (b) Remove engine center mode | -0.4** | +.01 | 0 | 0 | | | |
| (c) Remove angle command | 0 | | | | | | |
| (d) Remove non-5/6g feature | 0 | | | | | | |
| (e) Remove in-flight weighing | 0 | | | | | | |
| (f) Eliminate hysteresis features of attitude system | -0.5** | -.02 | 0 | 0 | | | |
| 2.2 Attitude hold and direct mode | +2.0** | +.07 | 0 | +.01 | | | |
| 2.3 Moment compensation | +10.0** | +.34 | 0 | +.03 | | | |
| 2.4 Modify Drwg. 7161-20[illegible]501 (Electrical) | +9.0 | +.16 | 0 | +.01 | | | |
| 3.0 ROCKETS | | | | | | | |
| 3.1 Use nitrogen for pressurization | +27.0** | +.51 | 0 | -.06 | | | |
| 3.2 Delete one set of attitude rockets | | | | | | | |
| syst #1 | (-8.3)** | +.03 | 0 | -.02 | | | |
| syst #2 | -9.7** | +.01 | 0 | -.01 | | | |
| 3.3 (a) Delete emerg lift rockets | -69.3 | +.19 | +.01 | +.07 | -10.1 | -8.1 | -16.9 |
| (b) Delete drogue chute | -19.9 | -.37 | -.07 | -.17 | -4.9 | -24.4 | -21.0 |
| 3.4 Incorporate fixed orificing | -6.2** | 0 | 0 | 0 | | | |
| 3.5 Relocate attitude rockets | (will not be relocated) | | | | | | |

* These weight estimates apply if present black boxes are modified. Bell proposes repackaging with an estimated total weight increment of zero, including moment compensation.

| | WEIGHT | + aft. HORIZ. C.G. CHANGES | + right LATERAL C.G. CHANGES | + up VERTICAL C.G. CHANGES | Roll $I_x$ INERTIA | Pitch $I_y$ INERTIA | Yaw $I_z$ INERTIA |
|---|---|---|---|---|---|---|---|
| | lbs. | inches | inches | inches | slug-ft$^2$ | slug-ft$^2$ | slug-ft$^2$ |
| 4.0 STRUCTURE | | | | | | | |
| 4.1 Gimbal ring 7161-438501 (#7) | 20 | 0 | 0 | 0 | +1.9 | +1.9 | +3.7 |
| 4.2 Structural changes required for LEM touchdown | (+130.0)** | 0 | 0 | -.20 | | | |
| 4.3 (a) Material change on rocket valve platform | +1.1 | -.01 | 0 | 0 | | | |
| (b) Corrosion preventative methods on vehicle | +7.0 | 0 | 0 | 0 | | | |
| 4.5 Alternate platform #1 (Aft equipment) redesign | -1.8 | -.03 | 0 | +.02 | | | |
| 4.6 Eliminate channeling of structure (Covered by item 4.5 and MISC. Item 1) | | | | | | | |
| 5.0 OPERATIONS | | | | | | | |
| 5.1 Design for 15K winds | 0 | | | | | | |
| 5.2 (a) Add manual shut-off valve to Hyd. syst. | +0.5 | 0 | 0 | 0 | | | |
| (b) Modify peroxide tanks standpipe | +0.5 | | | | | | |
| (c) Add JP-4 tank standpipe | +0.7 | +0.1 | +0.1 | +0.1 | | | |
| 5.3 Add a continuous reading gage and pilot display for JP | +1.3 | -.01 | -.01 | 0 | | | |
| 5.4 Minimize checkout | 0 | | | | | | |
| 5.5 Add pitch authority system | +0.6** | 0 | 0 | 0 | | | |
| MISCELLANEOUS | | | | | | | |
| 1. Increase peroxide capacity by 20% | 17.0 | 0 | 0 | 0 | | | |
| Additional peroxide | 120.0 | 0 | 0 | 0 | +74.2 | 0 | +74.2 |
| 2. New filler around JP tanks | -3.0 | | | | | | |
| 3. Roylyn JP level sensor | 0.5 | | | | | | |
| 4. Gould battery | -7.0 | | | | | | |
| 5. Use AN Ground power connector | 0.5 | | | | | | |
| 6. Delete Roll Authority System | -0.6 | | | | | | |

| | | +aft | +right | +up | Roll | Pitch | Yaw |
|---|---|---|---|---|---|---|---|
| | Weight C. G | Horizontal C. G. Changes | Lateral C. G. Changes | Vertical C. G. Changes | $I_x$ Inertia | $I_y$ Inertia | $I_z$ Inertia |
| | lbs. | inches | inches | inches | slug-ft$^2$ | slug-ft$^2$ | slug-ft$^2$ |
| SUMMARY | | | | | | | |
| Total Weight Empty Change (Excludes items marked **) | -1.0 | -.83" | -.01" | -.12" | | | |
| Total Useful Load Increase | 120 | 0 | 0 | 0 | | | |
| Total Gross Weight Increase | 119 | -.83 | -.01 | -.12 | +63.7 | +13.3 | +83.0 |
| NASA Est. of Present LLRV wt.[1] | 3830 | | | | | | |
| Estimated LLTV Max. Gross Wt.[2] | 3949 | | | | | | |

[1] Includes 200 lb. pilot; side instrument panel; center stick and pedals.

[2] Replacement of center stick and pedals with side controls and lift rocket stick with electrical throttle could change weight by ±15 lbs.