https://ntrs.nasa.gov/search.jsp?R=19660016993 2018-07-24T00:01:35+00:00Z

NATIONAL AERONAUTICS AND SPACE ADMINISTRATION

Technical Report No. 32-750

The Effect of Injector Design on Thrust-Chamber Erosion

R. W. Rowley
W. H. Tyler

D. F. Dipprey, Manager
Liquid Propulsion Section

JET PROPULSION LABORATORY
CALIFORNIA INSTITUTE OF TECHNOLOGY
PASADENA, CALIFORNIA

March 1, 1966

Copyright © 1966
Jet Propulsion Laboratory
California Institute of Technology

Prepared Under Contract No. NAS 7-100
National Aeronautics & Space Administration

CONTENTS

I. Introduction 1

II. Injector Design 2

III. Thrust Chambers 6

IV. Heat-Transfer Measurements 7

V. Nonreactive-Spray Techniques 8

VI. Test Results 9
- A. Mod I Injector 9
- B. Mod II Injector 9
- C. Mod III Injector 12
- D. Mod IV Injector 12

VII. Discussion and Conclusions 15

References 16

TABLES

1. Element characteristics 4

2. Injector performance 5

3. Thrust-chamber test results 10

FIGURES

1. Cross section of sprays produced by unlike-impinging-doublet injector elements 3

2. Arrangement of sprays: (a) Mod I and Mod II, (b) Mod III, (c) Mod IV 4

3. Typical long-tube injector 5

4. Ablative and pyrolytic graphite thrust chambers 7

5. Mod I injector 9

6. Mod II injector 11

7. Mod III injector 12

8. Mod IV injector 14

26283

ABSTRACT

Results are presented for an experimental investigation of the relationship between injector design and the erosion of ablative and pyrolytic graphite thrust-chamber throats. Techniques used to determine spray properties and local heat flux are described. It is concluded that injector spray properties, including local mass and mixture-ratio distributions, significantly influence throat erosion, and that proper control of these spray properties can reduce such erosion without recourse to separate film-cooling orifices. Four injectors, each incorporating 10 unlike-impinging-doublet elements, were tested with N_2O_4–N_2H_4 propellants at the 100-lb thrust level. Three different arrangements of the elements were used, one of which demonstrated substantially lower erosion of both ablative and pyrolytic graphite materials. Erosion of pyrolytic graphite, which occurred primarily in regions of high local mixture ratio, can be controlled by proper use of the variation in local mixture ratio observed within the injector spray. Erosion of Refrasil-phenolic occurred primarily in regions of high local heat transfer, but was also affected by the local mixture ratio. Although changing the spray configuration in the boundary flow reduced erosion of the ablative material, the relationship between spray properties and heat transfer or ablation has not been clearly defined.

I. INTRODUCTION

The role of the injector in controlling wall erosion in ablative and radiation-cooled liquid-rocket thrust chambers is, to say the least, imperfectly understood. It is generally accepted, however, that the interaction between the injector-related flow pattern and the wall material can be of the same order of significance in determining erosion characteristics as the propellant combination used or the physical and chemical properties of the wall material. This interaction is evidenced by the asymmetric throat erosion or *injector streaking* frequently observed in ablative thrust chambers. In order to gain some understanding of this injector–wall erosion relationship, four multi-element impinging-stream injectors, incorporating similar elements in three different arrangements, were tested with ablative and pyrolytic graphite thrust chambers. The manner in which the throats of these thrust chambers eroded can be related to some easily measured properties of the injection–combustion process,

particularly local heat flux to the thrust-chamber wall and local mixture ratio in the injector spray.

These injectors, tested over a 4-yr period, were developed as part of two separate projects: a thrust-chamber-materials evaluation program, and the Advanced Liquid Propulsion System (ALPS) project. The results of the injector studies are reported here without regard for the original objectives of the tests, which varied from evaluation of thrust-chamber materials to research into erosion mechanisms.

The most notable feature of the four injector designs was the use of long propellant orifices, having a length-to-diameter ratio (L/D) of 100 or more. These long tubes were designed to provide reproducible fuel and oxidizer jets and, hence, reproducible spray properties within the combustion chamber. Reproducibility is, of course, a prime requisite for any experiment, and it has been demonstrated (Ref. 1) that injector hydraulic characteristics must be carefully controlled in order to insure repeatable spray properties. The long tubes do not intrinsically provide any magic qualities (for example, merely using long-tube orifices does not guarantee a high-performance injector), but they do generate a type of jet that has been investigated in some detail (Ref. 2). This jet is characterized by a fully developed turbulent velocity profile and is relatively insensitive to disturbances in the upstream feed system, a desirable property for a rocket-engine injector.

All the injectors were designed for a nominal thrust level of 100 lb and for N_2O_4–N_2H_4 propellants. The nominal chamber pressure was 150 psia. Each injector incorporated 10 identical unlike-impinging-doublet elements, so arranged that the injected mass was spread across the injector face in a relatively uniform manner. This was achieved by allotting to each element approximately one-tenth of the area of the injector face, and by arranging the spray *fans* in such a way that they overlapped as little as possible. The techniques used to achieve a uniform distribution of propellant are discussed in more detail in Ref. 3.

The first two injectors built, designated as Mod I and Mod II and featuring identical arrangements of the 10 doublet elements, produced rapid erosion of ablative thrust chambers. The Mod II injector was also tested with a pyrolytic graphite thrust chamber and produced rapid erosion of this material as well. The third injector (Mod III), designed for a slightly different arrangement of the 10 elements, was tested only with an ablative thrust chamber and produced erosion comparable to that produced by the Mod I and Mod II versions. The last injector (Mod IV) incorporated a third element arrangement and resulted in a marked reduction in the erosion of both ablative and pyrolytic graphite materials. It is believed that this reduction in erosion rate was effected primarily by changing the orientation of the elements located near the thrust-chamber inner wall, thus changing the character of the flow of injected mass near the wall.

II. INJECTOR DESIGN

In the unlike-impinging-doublet injector elements discussed here, impingement of two liquid jets characteristically produces a spray *fan* similar to those depicted in Fig. 1. However, wide variations in the mass distribution within this type of spray (and, probably, in other spray properties as well) can result if the characteristics of the jets are not carefully controlled. For this reason, in the four injectors tested, the jets were formed by long tubes which had sharp, burr-free exits and were carefully aligned to ensure accurate impingement. At relatively high Reynolds numbers, this orifice configuration produces a stable and reproducible jet having a fully developed turbulent velocity profile. Properties of the spray produced when two such jets impinge are also reproducible.

As indicated in Fig. 1, the cross section of the spray fan is roughly elliptical when the impinging jets have the same momentum. Sampling of the spray produced by impingement of both miscible and immiscible liquids indicates that a phenomenon termed *penetration* occurs (Refs. 1 and 4), and the mixture-ratio distribution is as

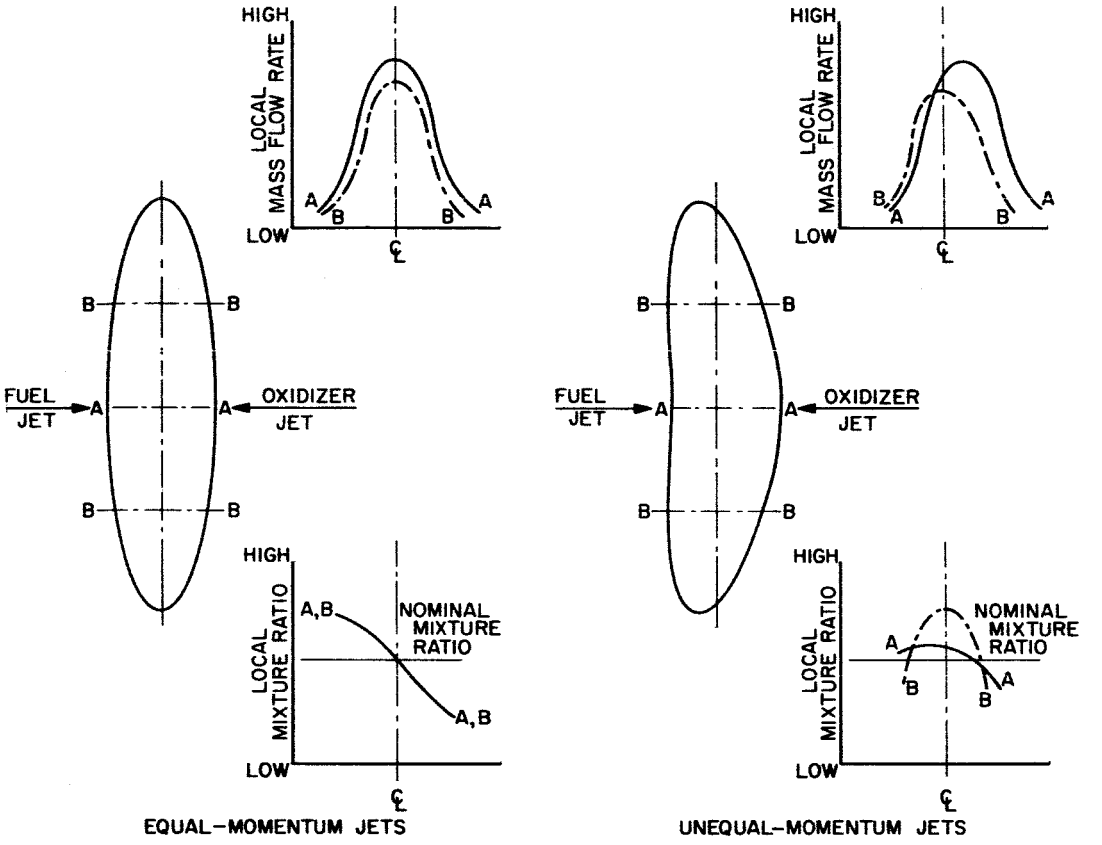

Fig. 1. Cross section of sprays produced by unlike-impinging-doublet injector elements

shown in Fig. 1. Thus, the side of the spray opposite the fuel orifice has a mixture ratio slightly lower than nominal, or *fuel-rich*, while the side opposite the oxidizer orifice shows a mixture ratio slightly higher than nominal, or *oxidizer-rich*.

For the elements used in the injectors under discussion, the spray fan is bent slightly if the jet momenta are not equal, the concave side of the spray being toward the jet having the lower momentum. As shown in Fig. 1, penetration is also observed in this unequal-momentum element. However, the mixture-ratio distribution is more complex than in the case of jets having the same momentum, and penetration is less pronounced in areas remote from the region near the plane containing the jets.

As a result of the divergence of the individual sprays, an interaction takes place between adjacent elements of an array; also, substantial portions of the spray from the elements adjacent to the combustion-chamber wall, and less significant portions from the inner elements, impinge upon the wall. Regardless of the degree of completion of the combustion process, the fluid that strikes the wall must influence local heat transfer and chemical erosion at that point. As it flows toward the throat, this fluid must also contribute to the heat-transfer and erosion processes at points downstream along the wall. The environment at any point on the wall is thus determined, not only by free-stream conditions, but also by the fluid that strikes the wall and by the fluid coming from upstream that has already impinged on the wall. Because of the complex configurations of the spray fans and of their intersections with the thrust-chamber wall, the composition and local mass flow rate at any point on the wall are difficult to determine.

Table 1 summarizes the characteristics of the doublet elements used in each of the four long-tube injectors. As mentioned, each injector incorporated 10 identical elements. The variations in element design noted in the table were partly evolutionary and partly the result of the slight difference in the mixture ratios used in the materials evaluation and in the ALPS program testing. As shown in Table 1, the orifice diameter remained constant at 0.020 in., but the length of the tubes varied from 175 L/D (3.5 in.) to 100 L/D (2.0 in.). A length of 100

Table 1. Element characteristics

Characteristic	Injector			
	Mod I	Mod II	Mod III	Mod IV
Orifice diameter,[a] in.	0.020	0.020	0.020	0.020
Orifice length,[a] L/D	175	150	100	100
Impingement angle,[b] deg	45	45	45	60
Resultant momentum angle,[c] deg	4.3[c]	4.3[c]	0	0
Free-stream jet length before impingement, L/D	4	8.5	4	4
Impingement-point distance from injector face, in.	0.150	0.150	0.074	0.062
Mixture ratio	1.0	1.0	1.2	1.2
Jet velocity, ft/sec				
Fuel	150	150	140	140
Oxidizer	100	100	120	120

[a]Fuel and oxidizer orifices were identical.
[b]Centerline or angle bisector of element was parallel to chamber axis.
[c]Angle between the resultant momentum line and the angle bisector of the element. The fuel jet has the higher momentum.

diameters was considered adequate to provide a fully developed turbulent jet, but longer orifices were incorporated in the first two injectors, in order to simplify the propellant manifolds. However, the pressure drop associated with these long orifices proved to be undesirably high, and shorter orifices were used in the later designs. The impingement angle (i.e., the included angle between the jets) was changed from 45 to 60 deg for the Mod IV injector, in order to increase the dispersion of the spray and reduce the local mass flow rate in the center of the spray fan (Ref. 1). There were also some small differences between injectors in impingement-point location and in free-stream jet length before impingement, none of which were considered to have a significant effect on spray properties.

Small but noticeable differences in spray properties resulted from a change in mixture ratio. The first two injectors were tested at a mixture ratio of 1.0; the Mod III and Mod IV injectors were operated at a mixture ratio of 1.2, which is approximately the mixture ratio for peak performance. With N_2O_4–N_2H_4 propellants and equal-area injector orifices, a mixture ratio of 1.2 produces a symmetrical spray fan and a resultant momentum vector aligned with the angle bisector or *centerline* of the element. In the injectors under discussion, this centerline was parallel to the axis of the thrust chamber. Thus, the injectors tested at mixture ratio of 1.0 produced a spray that was not axially directed, since the lower mixture ratio resulted in a proportionately higher fuel flow rate and, hence, a proportionately higher momentum in the

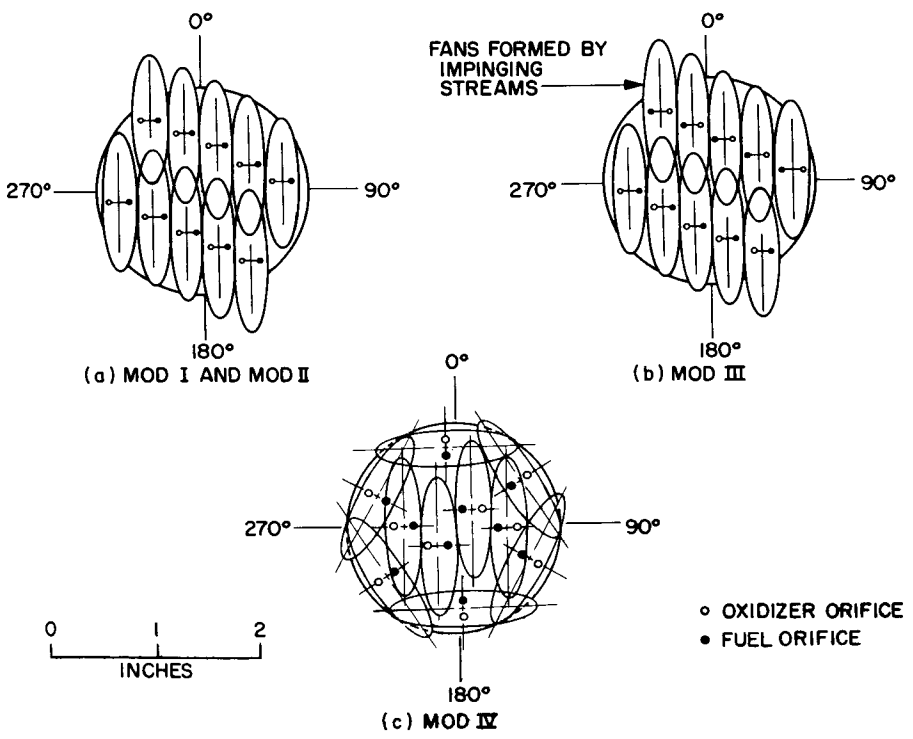

Fig. 2. Arrangement of sprays

fuel jet. This momentum imbalance produced a resultant spray-momentum vector having an angle of 4.3 deg from the thrust-chamber centerline and also a spray fan that was slightly bent (Fig. 1).

Figure 2 illustrates the various geometrical arrangements of the 10 elements used in this series of injectors.[1] In the Mod I and Mod II injectors, the arrangement was determined by two considerations: (1) it was desired to produce a variety of flow conditions around the circumference of the thrust chamber, and (2) it was intended that the arrangement be relatively simple to manifold. The orientation chosen, as shown in Fig. 2a, resulted in two rows of parallel elements. Except for the small differences in orifice length and free-jet length noted above, these two injectors were the same, thus providing some indication of the effect of fabrication tolerances on performance and erosion. Figure 3 shows a cross section of the Mod I injector, which is representative of the construction of the four injectors of this series.

[1]For simplicity, all the sketches of spray-fan arrangements presented in this report show the spray cross section as an ellipse, although some sprays were of the slightly bent configuration.

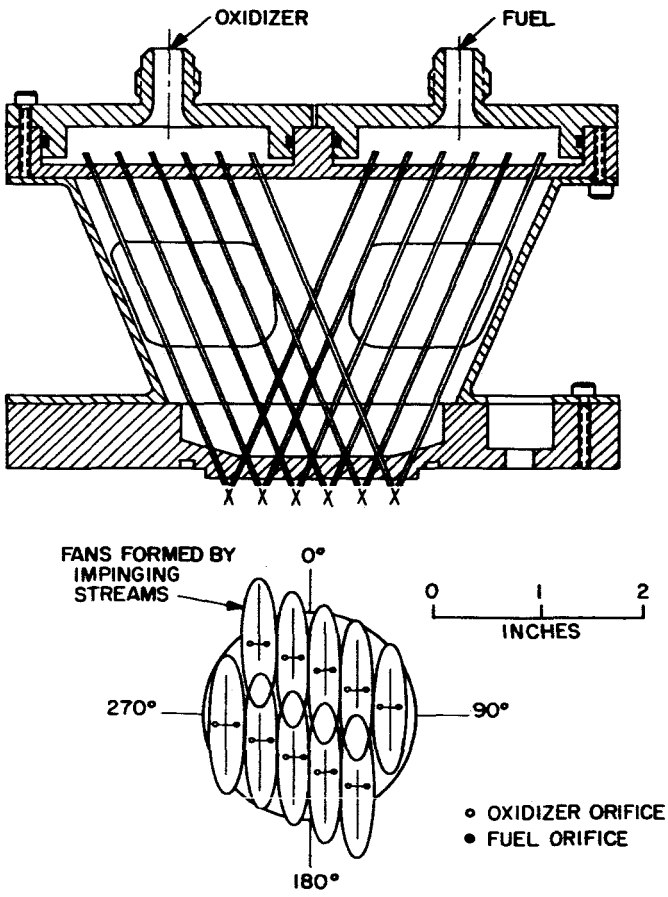

Fig. 3. Typical long-tube injector

The element arrangement used in the Mod III injector was based on results of tests of the Mod I and Mod II injectors. During those tests, the severe local erosion observed in the throats of ablative and pyrolytic graphite thrust chambers appeared to result from the boundary flow produced by the upper row of elements. The lower row of elements seemed to cause minimal erosion of both materials. The Mod III design, therefore, incorporated two rows of elements, both of which duplicated the relationship between the lower row and the chamber wall used in the Mod I and Mod II designs. As shown in Fig. 2b, the element arrangement for the Mod III unit appears similar to the other designs, but the upper row is manifolded so that the orientation of the fuel and oxidizer orifices is the reverse of that used in Mod I and Mod II.

The Mod IV injector incorporated a completely different and somewhat more conventional element arrangement. As illustrated in Fig. 2c, six of the elements were arranged in a circle around the circumference of the injector face. The remaining four elements were arbitrarily placed in the center of this circle. The wall of the thrust chamber was thus presented with a relatively uniform flow produced by the six *boundary* elements. For the tests reported here, this injector was manifolded so that the portion of the spray fan closest to the combustion-chamber wall constituted the lowest-mixture-ratio or fuel-rich zone (assuming penetration as in the nonreactive-fluid case).

The four injectors produced similar combustion efficiencies, as summarized in Table 2. The characteristic exhaust velocity for all injectors was 5540 fps ±1.5%, which represents an average of 95.3% of the theoretical equilibrium performance for the two mixture ratios

Table 2. Injector performance[a]

Parameter	Injector			
	Mod I	Mod II	Mod III	Mod IV
Mixture ratio	1.0	1.0	1.2	1.2
Theoretical equilibrium characteristic exhaust velocity,[b] ft/sec	5816	5816	5796	5796
Experimental characteristic exhaust velocity,[c] ft/sec	5620	5490	5550	5480
Percent of theoretical value	96.6	94.3	95.7	94.5

[a]Chamber pressure = 150 psia; propellants: N_2O_4–N_2H_4.
[b]From Ref. 5.
[c]Uncorrected for heat-transfer losses. Chamber pressure measured at injector face, not corrected to nozzle inlet conditions.

(Ref. 5). These injectors also produced relatively smooth combustion, as judged subjectively and from oscillograph traces of the output of chamber-pressure transducers. The combustion-pressure oscillations were measured during some tests with the Mod II injector by using a flush-mounted high-response pressure transducer. The maximum excursions observed were ± 4 psi about the mean chamber pressure (i.e., $\pm 3\%$), with a noise-like frequency distribution.

Adequate control of the hydraulic characteristics of the injection process is essential in the logical development of high performance rocket engines, as well as in research studies of injectors of the type discussed here. However, the method used to achieve control of jet hydraulic properties in these long-tube injectors is somewhat cumbersome for flight applications, and the use of another technique may be desirable. For example, as discussed in Ref. 2, the use of artifically roughened inlets for short orifices may afford a means of producing fully developed turbulent jets. Although not as effective as the long tubes, the shorter orifices are more adaptable to the flight-hardware requirements of compactness, light weight, and low pressure drop. It should be noted that the long orifices used in these research injectors produced very high pressure drops, ranging from 400 psi for the 100-L/D fuel orifices of the Mod IV injector to 800 psi for the 175-L/D fuel orifices of the Mod I.

III. THRUST CHAMBERS

The ablative thrust chambers tested with these injectors were fabricated of Refrasil-phenolic material containing approximately 30% resin by weight. As shown in Fig. 4, the thrust chambers were made in two sections, a combustion chamber and a nozzle, joined by a multilayer overwrap. A mounting flange was bonded to this overwrap. The nozzle section was a high-pressure laminate in which Refrasil cloth was used in *edgegrain* fashion, oriented 90 deg to the nozzle axis. Combustion-chamber sections employing this 90-deg orientation, and also a 45-deg-trailing-angle construction, were tested interchangeably. No significant erosion of the combustion chamber was observed in any tests of these thrust chambers. The characteristic chamber length L^* of the unit was 30 in.; however, a water-cooled adapter was used in tests with the Mod I and Mod II injectors, thus increasing chamber length to provide an L^* of 42 in.

The freestanding pyrolytic graphite thrust chambers, also shown in Fig. 4, were approximately the same in internal dimensions as the ablative thrust chambers, with some blending of contours to ease fabrication problems. The thickness of the pyrolytic graphite was approximately 0.050 in., and the thrust chamber weighed only 0.2 lb without the clamping flange and adapter. The L^* of the unit was 42 in. Several boron–pyrolytic graphite alloy thrust chambers fabricated to these same dimensions were also tested. The boron content was less than 1% by weight.

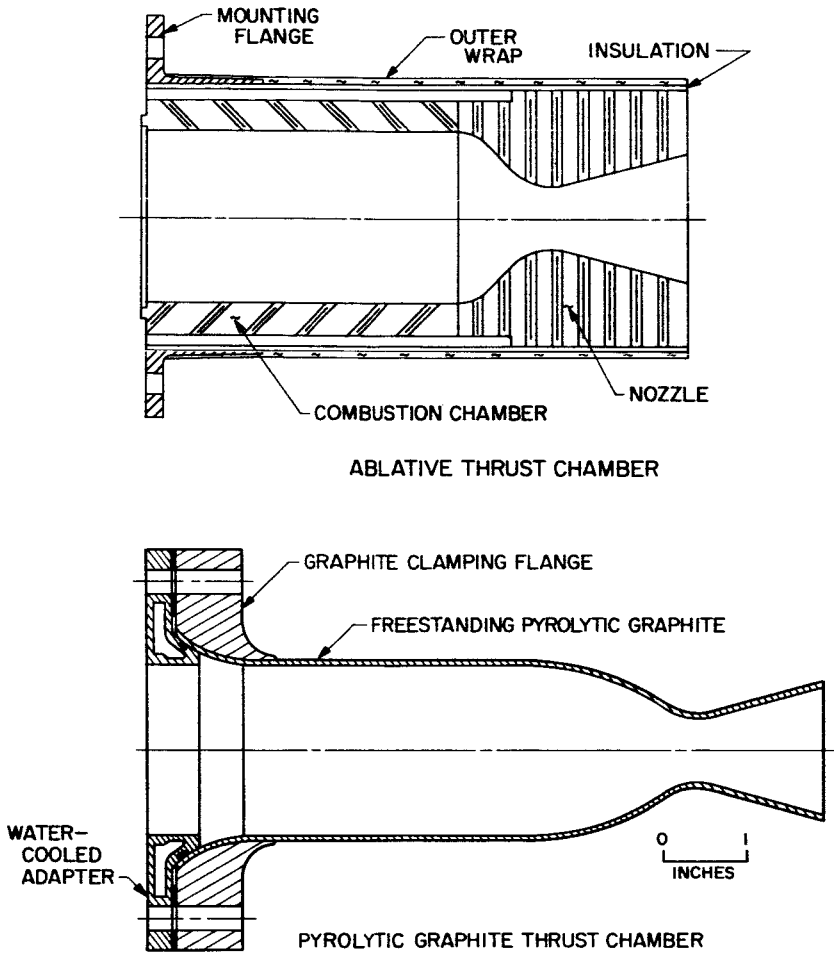

Fig. 4. Ablative and pyrolytic graphite thrust chambers

IV. HEAT-TRANSFER MEASUREMENTS

The circumferential distribution of heat flux to the combustion-chamber wall was determined during short-duration uncooled-engine tests by using the transient-thermocouple-plug technique discussed in Ref. 6. In this technique, a thermocouple was embedded in the wall of a steel combustion chamber, with the thermocouple junction at a known distance from the hot-gas surface. An additional thermocouple was located on the outside surface of the wall. The time–temperature history of these two thermocouples, plus knowledge of the thermal properties of the mild-steel wall material, allowed calculation of the temperature distribution in the wall between the two thermocouples. This distribution was then extrapolated to the hot-gas surface, and the slope at the wall was used in the Fourier equation to obtain the heat flux. Since temperature gradients in the axial and circumferential directions were small, relative to the temperature gradient through the wall, heat conduction along paths other than the radial path could be neglected without introducing appreciable error.

Although it would have been desirable to measure heat flux to the wall at the nozzle throat, the small nozzle size (0.75-in.-diameter throat) posed problems, both in fabricating a very small thermocouple plug and in calculating heat flux under conditions where heat conduction would surely not be one-dimensional. Because of these limitations, it was necessary to assume that the relative magnitudes of the circumferential distributions determined in the combustion chamber could be extrapolated to the throat. The circumferential distributions of chamber heat flux, presented in Section VI of this report, are for an axial location 1.0-in. upstream of the nozzle inlet at a time when the chamber-wall temperature was about 500°F. The circumferential heat flux distributions obtained 0.67-in. downstream and 0.67-in. upstream of this location are virtually identical to the distributions reported. This would indicate that, in this case at least, the flow conditions controlling the rate of heat-transfer to the wall are well established at the nozzle inlet, and that the relative magnitude of the heat flux distribution can be extrapolated from this region to the throat with reasonable confidence.

During the tests in which local heat-transfer rates were measured, the engine operating conditions (chamber pressure, mixture ratio, and thrust-chamber geometry) were maintained as close as possible to the conditions in tests of the ablative and pyrolytic graphite chambers.

V. NONREACTIVE-SPRAY TECHNIQUES

The propellant mass and mixture-ratio distributions were determined for two of the long-tube injectors by sampling the spray formed with nonreactive immiscible liquids that simulated the density of the actual propellants. The N_2H_4 fuel was simulated by water, and the N_2O_4 oxidizer by two different fluids: a mixture of carbon tetrachloride and kerosene for the Mod II injector, and straight trichloroethylene for the Mod IV. (The Mod I and Mod III injectors were damaged during handling before nonreactive-spray data could be obtained.) These fluids were injected at the same flow rates as those used for the engine firings. A row of sharp-edged ¼-in.-diameter tubes was used as a spray-sampling device, each tube sampling a portion of the injector spray for a known time period determined by a shutter arrangement. The Mod II injector was sampled at a distance of 2.13 in. from the injector face, the Mod IV at 4.63 in. The fluid sampled was passed to a collection tube where the immiscible test fluids separated. The volume of each liquid was recorded, and the local mass flow rate and mixture ratio were calculated. By either rotating or traversing the injector relative to the sampling-tube array between flow tests, the mass and mixture-ratio distributions for the entire injector were obtained. Additional descriptions of the spray-sampling techniques may be found in Refs. 1 and 7.

Some data have indicated that the spray properties of an N_2O_4–N_2H_4 impinging-doublet injector element can be modified considerably by the combustion process from the same properties determined with nonreacting fluids. It has been postulated that these effects are due to the extremely rapid liquid-phase reaction of the propellants (Ref. 8), which cause the jets to *blow apart* before the mixing process has had an opportunity to proceed very far. However, recent information indicates that the size of the jets and, perhaps, the jet velocity must be taken into consideration. Data presented in Refs. 9, 10, and 11 indicate that the magnitude of the effect of liquid-phase reactions on mixing at the impingement point decreased as jet diameter was reduced. In tests with an element composed of 0.020 in. diameter jets, and otherwise similar to the elements used in the injectors described here, mixing was apparently little affected by liquid phase reactions and results indicate penetration of the jets (Ref. 11).

These recent studies indicate that nonreactive-spray data do actually provide an adequate basis for predicting the mass and mixture-ratio distributions produced by these very small jets even in a combustion environment.

VI. TEST RESULTS

A. Mod I Injector

The Mod I injector was the first of this series to be tested with an ablative thrust chamber. As shown in Fig. 5 and Table 3, the result was rapid, asymmetric erosion in the nozzle throat, with an area increase of 30% in a 29-sec test at constant propellant flow rate. This area increase corresponds to an *average* erosion rate of 2 mils/sec (i.e., assuming that the area change was uniformly distributed around the circumference of the throat and that erosion proceeded at the same rate throughout the test, the erosion rate would have been 0.002 in./sec). However, the local erosion rate varied from a maximum of 5 mils/sec to no erosion in the region of the throat between 180 and 270 deg.

Comparison of the throat-erosion pattern with the circumferential distribution of heat flux measured in the combustion chamber (Fig. 5) indicated that erosion occurred primarily in regions of high local heat flux. This would suggest that the erosion was mostly thermal ablation. However, the nonreactive spray properties of this injector were not measured, and the contribution of chemical reactions between the wall and the boundary flow to the erosion observed cannot be determined.

The Mod I injector was not tested with a pyrolytic graphite thrust chamber.

B. Mod II Injector

This injector was a near duplicate of the Mod I injector and also produced rapid, asymmetric erosion in the throat of an ablative thrust chamber. As shown in Fig. 6 and Table 3, a throat area increase of 28% resulted from a test of 30-sec duration, corresponding to an average erosion rate of 1.8 mils/sec. Again, the maximum time-averaged local erosion rate was 5 mils/sec, while the region of the throat between 180 and 270 deg showed almost no erosion. Comparison of the throat-erosion pattern and the circumferential distribution of local heat flux in the combustion chamber indicated that ablation occurred primarily in regions of high local heat flux.

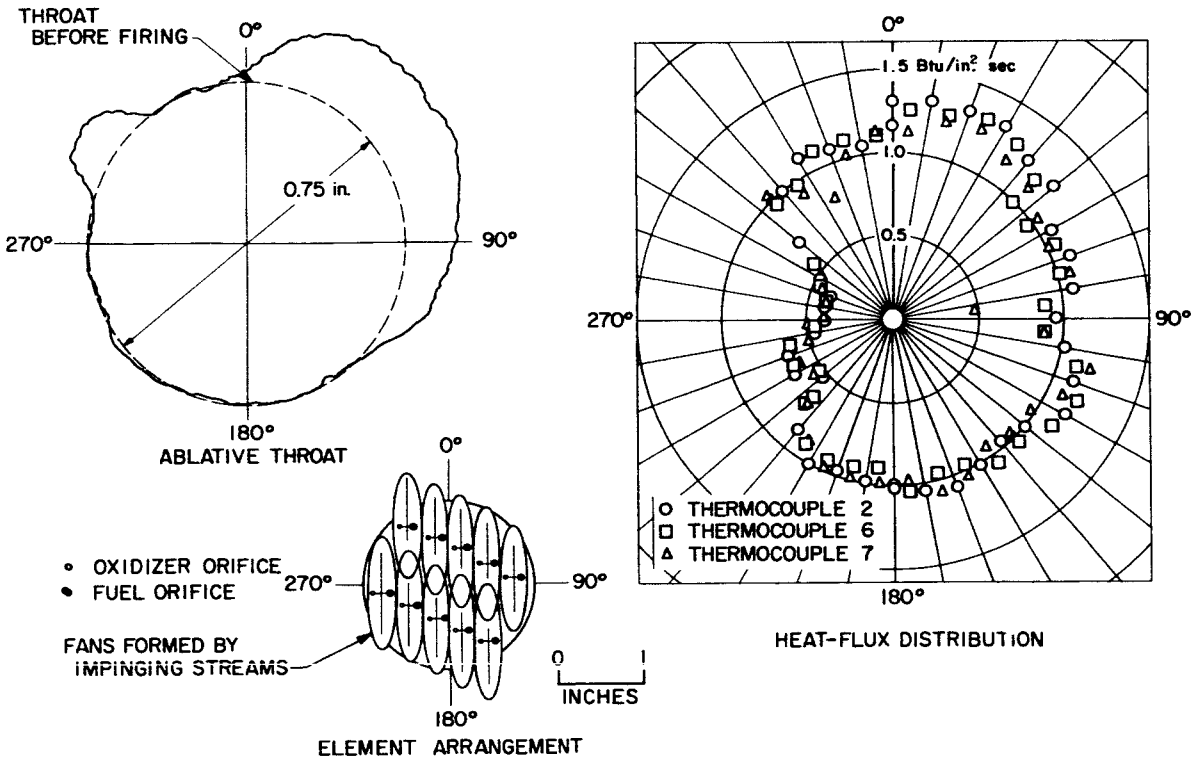

Fig. 5. Mod I injector

Table 3. Thrust-chamber test results

Thrust-chamber type	Injector	Mixture ratio[a]	Test duration, sec	Initial chamber pressure, psia	Throat-area change,[b] %	Average throat-erosion rate, mils/sec	Maximum local throat-erosion rate, mils/sec
Ablative	Mod I	1.0	29	153	30	2.0	5.0
Ablative	Mod II	1.0	30	149	28	1.8	5.0
Ablative	Mod III	1.2	30	161	33	2.0	5.6
Ablative	Mod IV	1.2	30	154	4	0.3	1.6
Pyrolytic graphite	Mod II	1.0	30	140	5	0.4	0.5
Pyrolytic graphite	Mod II	1.0	30	140	—	—	0.5
Pyrolytic graphite	Mod II	1.2	30	141	4	0.3	0.5
Pyrolytic graphite	Mod IV	1.12	30	145	1.4[c]	0.043[c]	0.05[c]
Pyrolytic graphite	Mod IV	1.2	30	152			
Boron–pyrolytic graphite alloy	Mod IV	1.2	310	148	3 (Estimated)	0.02 (Estimated)	Chamber failed
Boron–pyrolytic graphite alloy	Mod IV	1.2	315	152	2.6 (Estimated)	0.02 (Estimated)	Chamber failed
Boron–pyrolytic graphite alloy	Mod IV	1.15	150	147	2.8	0.03	0.05

[a]Propellants: N_2O_4–N_2H_4.
[b]Constant propellant flow rate.
[c]Total for two tests.

Although the throat-erosion pattern and the heat-flux distribution obtained with the Mod II injector are grossly similar to those produced by the Mod I injector, differences in the local distribution of erosion and heat flux are apparent. As discussed in Section II, these two injectors were similar in design. Small variations in orifice alignment, resulting from fabrication tolerances, may have affected local spray properties enough to produce the differences observed. For example, although the misalignment between the centerlines of the two orifices in each element was held to approximately 0.001 in. at the impingement point, tests with nonreactive liquids have shown that even such a small mismatch can result in changes in the spray properties produced by these very small jets, and variations in mass distribution are visible to the eye during water-flow tests. Although 0.001-in. mismatch is a reasonably close tolerance for a complicated injector assembly, it does represent 5% of the diameter of a 0.020-in. jet, a significant misalignment of such a small stream.

Comparison of the outline of the ablative throat tested with this injector and the local nonreactive mixture ratio near the wall (Fig. 6) did not reveal a good correlation between erosion of the Refrasil-phenolic ablative material and the composition of the boundary flow. Erosion occurred in regions of both high and low local mixture ratio near the wall. Thus, although chemical erosion in areas of oxidizing combustion products cannot be ruled out, other erosive mechanisms must also be present. The relationship observed between local erosion and local heat flux with both the Mod I and Mod II injectors suggested that thermal ablation may have been the primary eroding mechanism and that chemical erosion was of secondary importance. Although the ablative char can react with oxidizing combustion products, the presence of a semicontinuous layer of molten silica on the hot surface may reasonably be expected to reduce the rate of such reactions.

When tested with a pyrolytic graphite thrust chamber, the Mod II injector again produced nonuniform local erosion in the nozzle throat (Fig. 6). When the location of this erosion (roughly between 350 and 110 deg) is compared with the nonreactive-spray mixture ratio distribution (Fig. 6), it is evident that the erosion occurred primarily in the region of high mixture ratio in the boundary flow. Thus, the erosion observed was probably the result of a reaction between the pyrolytic wall and the combustion products that reached the wall in the high mixture ratio zone. For example, equilibrium calculations for this propellant system predict 8 mol % of oxygen at a mixture ratio of 2.0, but practically no free oxygen at the nominal mixture ratio of 1.0. There is, therefore,

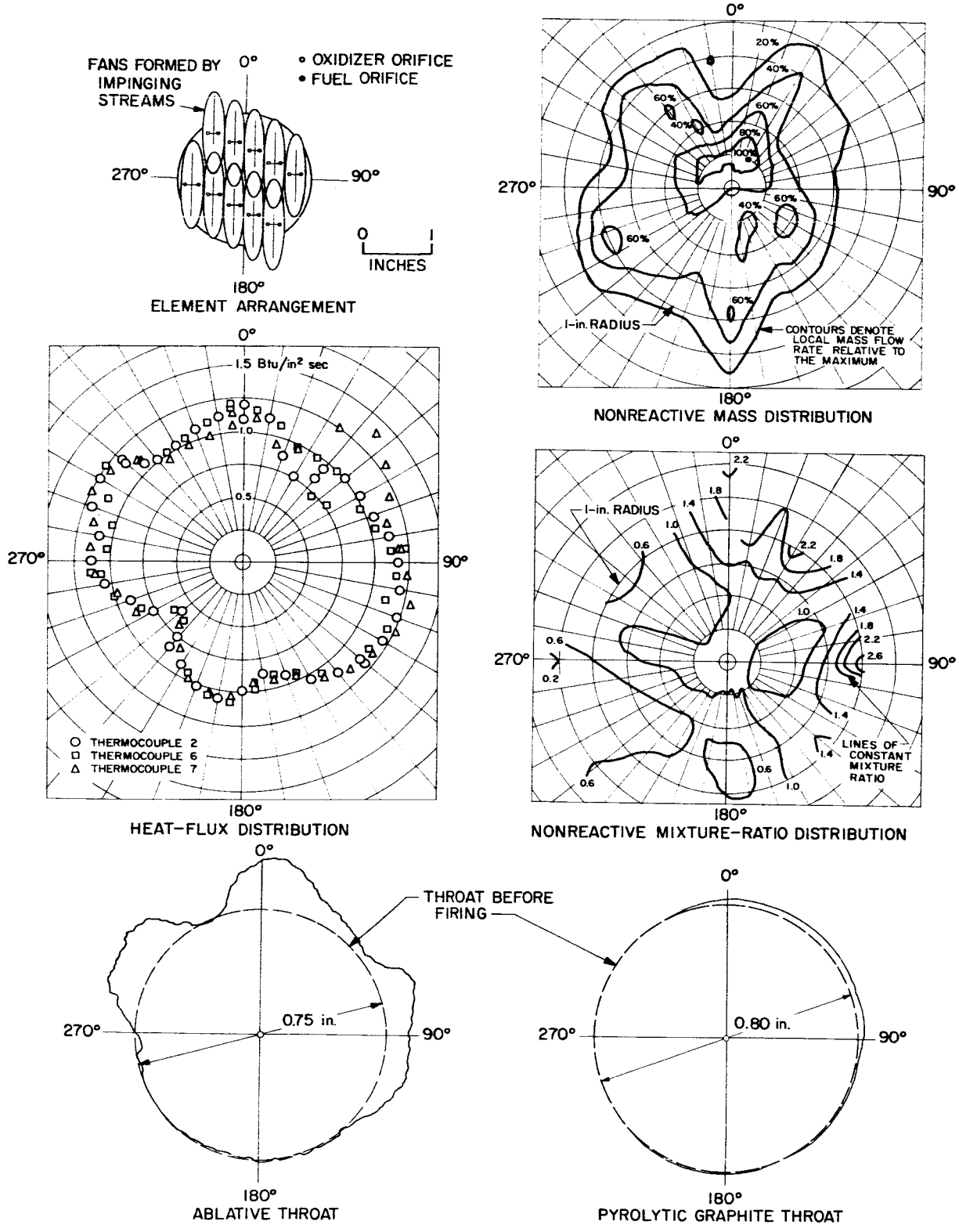

Fig. 6. Mod II injector

the possibility of a reaction between the oxygen in the combustion products and the graphite wall in the oxidizer-rich zone. As in the test of the ablative thrust chamber, little throat erosion was observed in the area between 180 and 270 deg.

The erosion of the pyrolytic graphite thrust chamber, shown in Fig. 6, occurred during a 30-sec test and resulted in a maximum time-averaged erosion rate of approximately 0.5 mil/sec (Table 3). Following this test, the same thrust chamber was rotated to present the uneroded portion of the nozzle throat to the region in the injector flow pattern where erosion had occurred, and the thrust chamber again was tested for 30 sec. Following the test, erosion was observed in the same area (i.e., approximately between 350 and 110 deg) and in the same magnitude (i.e., a total of 0.015 in. at the worst location or 0.5 mil/sec) as in the first test, demonstrating the reproducibility of the injector-related erosion.

The results of one additional test of a pyrolytic graphite thrust chamber using the Mod II injector with propellants injected at a mixture ratio of 1.2 (rather than 1.0 as in the tests discussed thus far) are also included in Table 3. As noted in Section II of this report, such a change in mixture ratio results in small changes in local spray properties. However, during this test, erosion occurred in the same region and to about the same degree as in tests at the lower mixture ratio, indicating that the small change in local spray properties did not significantly affect local erosion.

C. Mod III Injector

For the Mod III version, the basic design of the Mod I and II injectors was modified by changing the manifolding of the upper row of elements to provide the same boundary flow conditions for both upper and lower rows. However, when tested with an ablative thrust chamber, the result again was rapid erosion of portions of the nozzle throat. As shown in Fig. 7 and Table 3, the maximum time-averaged local erosion rate was 5.6 mils/sec, with a throat-area increase of 33% during a 30-sec test. The average erosion rate was 2 mils/sec, thus showing no improvement over the erosion produced by the Mod I and Mod II injectors. However, the distribution of erosion was different than that observed in the previous tests, and exhibited a symmetry corresponding to that of the element arrangement (i.e., erosion occurred at the same location relative to the spray in both the upper and lower halves of the throat).

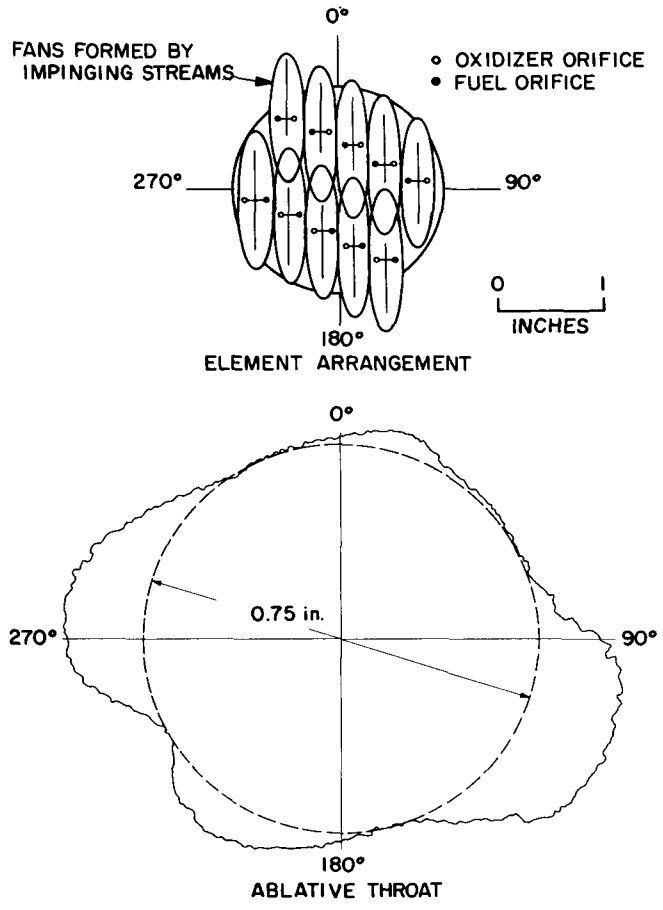

Fig. 7. Mod III injector

To some extent, the erosion in both the upper and lower halves of this throat does resemble the erosion observed in the lower halves of ablative throats tested with both the Mod I and Mod II injectors. However, some differences in the erosion patterns are apparent, and, despite the attempt to reproduce the spray properties produced by the lower row of elements of the earlier injectors, some differences in spray properties probably existed. Unfortunately, this injector was damaged before nonreactive-spray properties could be obtained, and the extent of these differences could not be determined. As a result of this damage, heat-flux measurements could not be made nor could the injector be tested with a pyrolytic graphite thrust chamber.

D. Mod IV Injector

The final injector in this series (Mod IV) was designed specifically to minimize erosion in pyrolytic graphite and similar materials. For this reason, an entirely different element orientation was used in an attempt to produce

a uniform, low mixture ratio boundary flow around the thrust chamber circumference. As discussed previously, this fuel-rich boundary was predicated on the existence of penetration in the spray fans produced by the impingement of the fuel and oxidizer jets.

Two 30-sec tests were made with this injector and a single pyrolytic graphite thrust chamber. The same chamber orientation was used for both tests. Figure 8 shows the throat outline after the two tests, and Table 3 presents erosion-rate data. The time-averaged maximum local throat erosion was 0.05 mil/sec, with a total area increase of 1.4% during the 60 sec of testing. This represents an order-of-magnitude reduction in total erosion over that produced in a pyrolytic graphite chamber by the Mod II injector. In addition, the erosion produced by the Mod IV injector was distributed more uniformly around the circumference of the throat. The nonreactive-fluid mixture ratio distribution (Fig. 8) indicates that this injector element arrangement actually did produce the desired low mixture ratio zone at the boundary. The significantly lower erosion rate observed in this pyrolytic graphite chamber, as compared with the erosion produced by the Mod II injector when tested with a similar chamber, demonstrates that proper control of the composition of the boundary flow can minimize chemical erosion of materials such as pyrolytic graphite.

Results of these tests with a pyrolytic graphite thrust chamber provide further evidence that penetration existed with these small jets in the N_2O_4–N_2H_4 propellant system, as was assumed in Section V. For example, if the two propellant streams forming each doublet had *blown apart*, as suggested in Ref. 8, the boundary would have been presented with a highly oxidizing flow, and rapid throat erosion should have ensued.

In addition to tests of the Mod IV injector with free-standing pyrolytic graphite thrust chambers, several long-duration tests were conducted with thrust chambers that were of similar design but were fabricated of boron-pyrolytic graphite alloy. Results of these tests are included in Table 3. Two tests of over 300-sec duration ended with failure of the thrust chamber. Since all tests were conducted with constant propellant flow rate, total erosion could be estimated from the decline in chamber pressure during the tests. The estimated erosion was in agreement with erosion measured in a third thrust chamber that was undamaged after a shorter-duration test (150 sec). In all cases, the erosion rate was approximately one-half that exhibited by unalloyed pyrolytic graphite when tested with the same injector.

The boron-pyrolytic graphite alloy thrust chamber, which was tested for 150 sec, was fired in a partial vacuum and was mounted inside a simulated micrometeoroid and thermal shield. These conditions reduced both convective and radiative cooling of the outside wall of the thrust chamber and provided a more severe test of the chamber (from the standpoint of the thermal environment) than was the case with the other firings listed in Table 3—all of which were conducted in the atmosphere without shields. On the basis of these tests, the erosion resistance of boron-pyrolytic graphite alloy appears to be exceptionally good.

When tested with an ablative thrust chamber, the Mod IV injector produced significantly lower erosion than did the other three injectors. The average throat-erosion rate for a 30-sec test was only 0.3 mil/sec, giving a throat-area increase of 4.2%. The maximum local erosion rate was 1.6 mils/sec. The outline of the throat after testing, as shown in Fig. 8, exhibited several zones of local erosion, but was more uniform than had been observed in ablative chamber tests with the Mod I, II, and III injectors. The circumferential distribution of heat flux in the combustion chamber is also shown in Fig. 8. Although this distribution was more uniform than those measured with the Mod I and II injectors, and although there were a limited number of data points, several small peaks can be noted at locations corresponding to zones of local erosion in the ablative throat. Significantly, however, the magnitude of the peak heat flux is the same as the maximum heat flux observed with the Mod I and II injectors (i.e., between 1.2 and 1.3 Btu/in.^{2}-sec). Thus, a reduction in ablation was accomplished without a corresponding reduction in local heat transfer. This suggests that chemical reactions between the ablative wall and the boundary flow may be more significant than early test results had indicated, and that a low mixture ratio boundary flow, a characteristic of the Mod IV injector, is necessary to ensure low ablation rates of Refrasil-phenolic and similar materials. Nevertheless, with all three injectors for which local heat flux data were obtained, erosion in ablative throats occurred primarily in the regions of highest local heat flux. Thus, uniformly low heat rejection to the thrust chamber wall is a prime requirement for minimizing ablation.

It is apparent that erosion of Refrasil-phenolic materials is a complex process involving chemical attack of the char, as well as thermal ablation of the Refrasil reinforcement. The boundary flow produced by injectors used with such materials must provide compatible composition (i.e., be fuel-rich) as well as a low heat rejection rate to the thrust chamber wall.

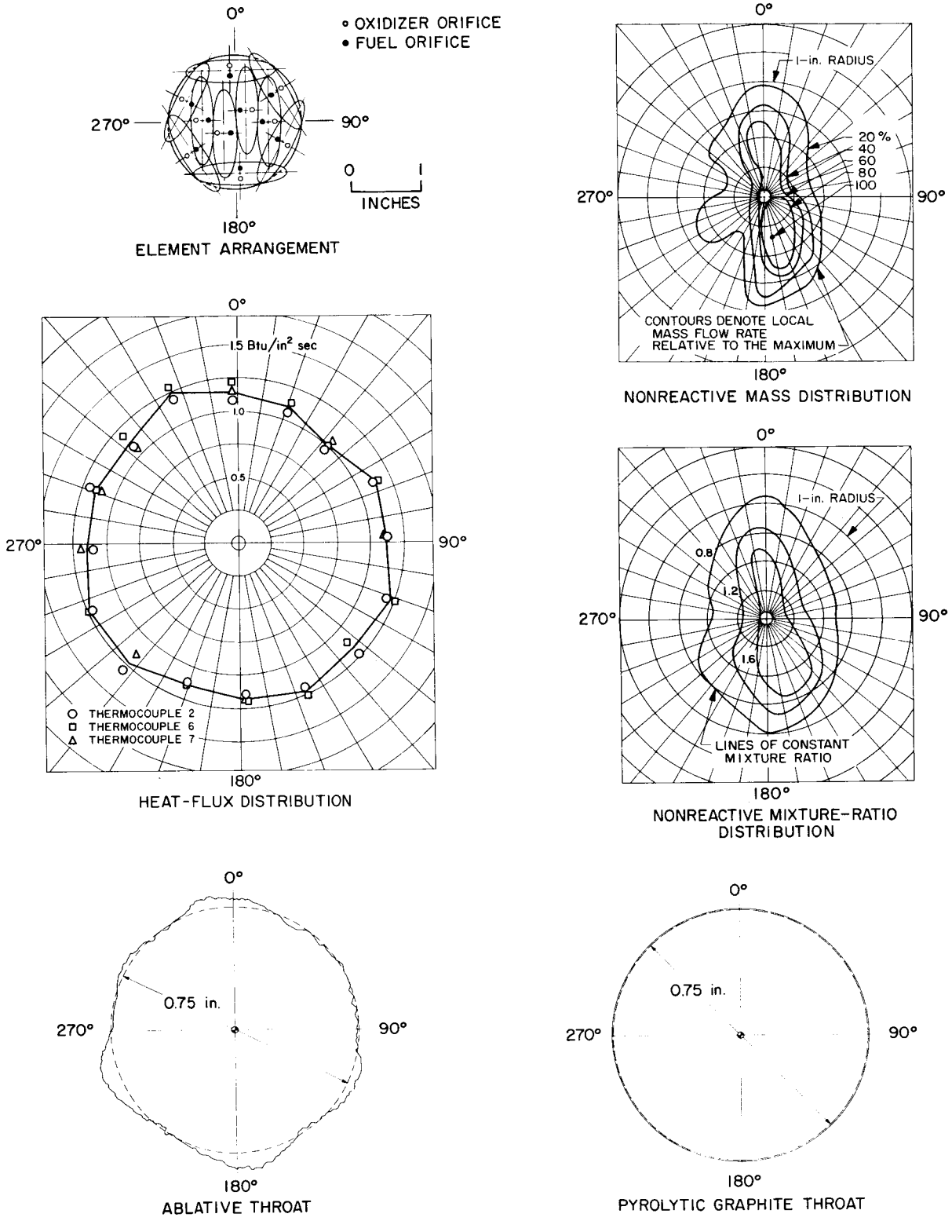

Fig. 8. Mod IV injector

VII. DISCUSSION AND CONCLUSIONS

Although the data presented in this report are not as complete as could be desired, and quantitative correlations cannot yet be drawn, the results demonstrate some of the ways in which injector design can influence local erosion rates. Both thermal and chemical erosion were significantly influenced by the character of the flow near the thrust-chamber wall. As shown by the tests of the four injectors, local erosion can be minimized, even in high-performance engines, by controlling the boundary flow through proper orientation of the injector spray field. Injector spray properties can be used to assist film cooling in protecting the chamber wall and, in some cases (such as in very-low-thrust engines where the number of propellant orifices is limited), a compatible boundary flow can only be achieved through proper orientation of the main flow injector elements.

Although the thermal and chemical environments at the wall were changed by altering the injector spray pattern, only the manner in which the chemical environment was changed could be predicted. Once the mixture-ratio distribution of the individual elements was determined, the spray pattern could be designed to provide a relatively uniform flow of compatible fluid near the wall, subject only to small element-to-element variations caused by misalignment, etc. However, the manner in which injector spray properties can be used to control the local heat-transfer rate is not as well understood. Although changes in the element orientation of these injectors affected the distribution of local heat flux, it was not possible to predict a priori the results of a change in spray properties. It was suggested in Ref. 3 that the local mass flow rate of propellant striking the wall controls the local heat-transfer rate and that conditions at points relatively far downstream in the flow (i.e., at the throat or beyond) are, to a large extent, determined by impingement upon the wall at upstream locations. Unfortunately, the nonreactive-spray data presented in this report cannot be manipulated to provide an indication of the local mass flux arriving at the chamber wall. Further research into the physical processes that govern local heat transfer in a liquid-propellant rocket engine is clearly indicated.

Although chemical and thermal erosion have been approached as separate phenomena to simplify interpretation of the test results, they are really quite closely related. For example, chemical erosion rates are determined, in part, by the temperature of the thrust-chamber wall, which is, in turn, determined by the local heat-transfer rate. Thus, erosion of pyrolytic graphite could be reduced, even in an oxidizing atmosphere, by reducing the heat transferred to the wall. In the case of Refrasil-phenolic ablative materials, where both melting ablation of the reinforcement and chemical erosion of the char can occur, minimum heat transfer and a non-oxidizing boundary flow are both required to minimize erosion and the attendant dimensional change. An additional environmental factor, the shear force, is also involved in determining the erosion rate of melting ablators such as Refrasil-phenolic, since the melt layer is continuously removed under the shearing action. No measurements of this shear environment were attempted, and the influence of variations in injector spray properties upon the local magnitude of such forces is not known.

Some of the problems inherent in injection devices having small liquid jets are apparent from the data obtained with the Mod I and Mod II injectors. Although these injectors were intended to produce identical spray properties, differences in ablative-throat erosion patterns and local heat-flux distributions were observed. As previously mentioned, these differences are attributed to small variations in spray properties resulting from slight mismatches of the jet centerlines at impingement. Some mismatching is inevitable, unless provision is made for adjusting the orifice alignment, but the effects of relatively small misalignments are exaggerated by the small size of the jets. The variations in local erosion which could be attributed to orifice misalignment were small relative to the changes effected when the boundary flow was substantially altered by reorientation of the boundary elements.

The thermocouple-plug technique for determining local heat flux, regarded here as an *off-the-shelf* method, provided valuable data with a minimum amount of effort. Uncooled hardware used during injector development tests can be readily instrumented with commercial thermocouple plugs to provide data on local heat-flux distribution prior to tests with ablative or radiation-cooled thrust chambers. The nonreactive-spray techniques entail somewhat more effort since a spray booth and collection device are required. As mentioned, the limitations on the use of nonreactive fluids to simulate highly reactive propellants are not yet clearly defined. With small jets, however, or with less reactive or nonhypergolic propellant systems, nonreactive-fluid techniques can provide

valuable supplemental information. The importance of proper control of jet hydraulic characteristics to ensure reproducible spray properties cannot be overemphasized. Adequate contol is prerequisite to acquiring reproducible data with either thermocouple-plug or nonreactive-fluid techniques.

In summary, there are three conclusions that may be drawn. First, both thermal and chemical erosion rates of nozzle-throat materials are significantly influenced by the boundary flow produced by the injector. Local erosion can be minimized by proper control of this boundary flow, by orienting the spray fields produced by individual injector elements so that the least injurious portion of the spray is adjacent to the wall.

Second, local heat-transfer distributions, as determined by thermocouple-plug techniques, and local spray properties, as determined by nonreactive-fluid techniques, can provide valuable insight into the mechanisms responsible for injector-related erosion effects.

Third, a detailed understanding of injection-related thrust-chamber erosion is hampered by the relative lack of information on the physical processes that constitute *spray combustion* in the rocket engine.

REFERENCES

1. Rupe, J. H., *The Liquid Phase Mixing of a Pair of Impinging Streams*, Progress Report No. 20-195, Jet Propulsion Laboratory, Pasadena, California, August 6, 1953.
2. Rupe, J. H., *On the Dynamic Characteristics of Free-Liquid Jets and a Partial Correlation with Orifice Geometry*, Technical Report No. 32-207, Jet Propulsion Laboratory, Pasadena, California, January 15, 1962.
3. Rupe, J. H., and Jaivin, G. I., *The Effects of Injection Mass Flux Distributions and Resonant Combustion on Local Heat Transfer in a Liquid-Propellant Rocket Engine*, Technical Report No. 32-648, Jet Propulsion Laboratory, Pasadena, California, October 1, 1964.
4. Somogyi, D., and Feiler, C. E., "Mixture Ratio Distributions in the Drops of Spray Produced by Impinging Liquid Streams," *ARS Journal, Vol. 30, No. 2*, February 1960, pp. 185–187.
5. Elverum, G. W., Jr., and Martinez, J. S., *Results of Performance Calculations for N_2O_4–N_2H_4 Bipropellant System*, Memorandum No. 20-174, Jet Propulsion Laboratory, Pasadena, California, July 3, 1958.
6. Powell, W. B., Howell, G. W., and Irving, J. P., *A Method for the Determination of Local Transient Heat Flux in Uncooled Rocket Motors*, Technical Report No. 32-257, Jet Propulsion Laboratory, Pasadena, California, July 1, 1962.
7. Johnson, B. H., "Injector Development," *Space Programs Summary No. 37-21, Volume IV*, Jet Propulsion Laboratory, Pasadena, California, June 30, 1963, pp. 109–112.
8. Elverum, G. W., Jr., and Staudhammer, P., *The Effect of Rapid Liquid-Phase Reactions on Injector Design and Combustion in Rocket Motors*, Progress Report No. 30-4, Jet Propulsion Laboratory, Pasadena, California, August 25, 1959.

REFERENCES (Cont'd)

9. Stanford, H. B., and Tyler, W. H., "Injector Development," *Space Programs Summary No. 37-31, Volume IV*, Jet Propulsion Laboratory, Pasadena, California, February 28, 1965, pp. 192–196.

10. Johnson, B. H., *An Experimental Investigation of the Effects of Combustion on the Mixing of Highly Reactive Liquid Propellants*, Technical Report No. 32-689, Jet Propulsion Laboratory, Pasadena, California, July 15, 1965.

11. Stanford, H. B., "Injector Development," *Space Programs Summary No. 37-36, Volume IV*, Jet Propulsion Laboratory, Pasadena, California, December 31, 1965, pp. 174–176.