https://ntrs.nasa.gov/search.jsp?R=19660020833 2019-09-30T06:01:46+00:00Z

NATIONAL AERONAUTICS AND SPACE ADMINISTRATION

Technical Report No. 32-860

Effects of Energy Dissipation on the Free Body Motions of Spacecraft

Peter W. Likins

N66 30123
(ACCESSION NUMBER)
77
(PAGES)
CR-76114
(NASA CR OR TMX OR AD NUMBER)
(THRU)
1
(CODE)
31
(CATEGORY)
FACILITY FORM 602

GPO PRICE $ _____

CFSTI PRICE(S) $ _____

Hard copy (HC) 3.00

Microfiche (MF) .75

ff 653 July 65

JET PROPULSION LABORATORY
CALIFORNIA INSTITUTE OF TECHNOLOGY
PASADENA, CALIFORNIA

July 1, 1966

NATIONAL AERONAUTICS AND SPACE ADMINISTRATION

Technical Report No. 32-860

Effects of Energy Dissipation on the Free Body Motions of Spacecraft

Peter W. Likins

G. E. Sweetnam, Manager
Spacecraft Control Section

JET PROPULSION LABORATORY
CALIFORNIA INSTITUTE OF TECHNOLOGY
PASADENA, CALIFORNIA

July 1, 1966

Copyright © 1966
Jet Propulsion Laboratory
California Institute of Technology

Prepared Under Contract No. NAS 7-100
National Aeronautics & Space Administration

CONTENTS

I. Introduction to the Problem 1

II. Preliminary Considerations 2

A. Definitions 2
B. Rigid Body Rotational Motion and Stability 3
C. Attitude Stability of Nonrigid Bodies 3
D. The Space Environment 4

III. Alternative Methods of Solution 5

A. The Energy Sink Model Method 5
B. The Discrete Parameter Model Method 5
C. The Modal Model Method 5

IV. The Energy Sink Model 8

A. Poinsot Motion Modified for Energy Dissipation 8
B. The Acceleration of a Particle Attached to a Free Rigid Body . . . 13
C. Application to SYNCOM 15
D. Application to *Explorer I* 16
E. Applications with Structural Damping 18
F. Applications with Annular Dampers 20
G. Applications with Pendulum Dampers 20
H. Applications with Mass-Spring-Dashpot Dampers 21

V. The Discrete Parameter Model 22

A. The Idealization 22
B. The Analysis 22
C. Examples 22

VI. The Modal Model 24

A. The Idealization 24
B. General Equations of Motion 26
C. Equations of Motion in a Uniform Gravitational Field 33
D. Equations of Motion for Free, Flexible Bodies 36
E. Transformation to Modal Coordinates 41

VII. Conclusions 46

A. Energy Sink Model Analysis (Method I) 46
B. Discrete Parameter Model Analysis (Method II) 46
C. Modal Model Analysis (Method III) 46

Appendices 47

A. Historical Background 47
B. Free Rigid Body Attitude Stability 50
C. Poinsot's Construction for Free Rotation of Rigid Bodies 52
D. Idealized Examples Counter to Stability Criterion for Flexible, Dissipative Bodies 58
E. Matrix Derivation for Modal Method 60

References 62

FIGURES

1. Euler angles 2
2. A hypothetical polhode for a dissipative body with $I_3 = 3I_2/2 = 2I_1$ 8
3. A hypothetical polhode for a symmetric dissipative body 9
4. Poinsot motion when θ is maximal 10
5. Relationship among kinetic energy, nutation angle, and inertia ratio 12
6. Pendulum dampers 23
7. Cable dampers 23
8. Spring-mass-dashpot damper 23
9. Undeformed idealized system 25
10. Deformed idealized system 25
11. Coordinate system 26

A-1. Cutaway view of *Explorers I* and *III* 48

C-1. Poinsot motion of a free rigid body 53

C-2. Polhodes for body with $I_3 = 3I_2/2 = 2I_1$ 54

C-3. Motion cones for free prolate spheroid 55

C-4. Motion cones for free oblate spheroid 55

C-5. Unit vector relationships 56

C-6. Sketches for relating cone angles 57

D-1. Idealized flexible dissipative body No. 1 58

D-2. Idealized flexible dissipative body No. 2 59

ABSTRACT

30123

The objective of this study is the development of methods of analysis of the motions of spacecraft modeled as nonrigid, dissipative bodies in a force-free environment. In the absence of external forces, angular momentum is conserved, but, because of internal energy dissipation effects, gross changes in body orientation and rotational motion may occur. Three analytical methods for the prediction of these changes are developed or described in this report.

The first method, based on a model of a spacecraft as a rigid body with an "energy sink," has been described in numerous papers in the technical literature. The method is discussed and documented, and limitations in its application are noted.

The second method involves the dynamical analysis of a discrete parameter model of a spacecraft, including discrete dampers. This method, which, analytically, is the most straightforward of the three, is described briefly, and its range of application to spacecraft is defined.

In the third method, a modal model is utilized; i.e., motions are described in terms of the normal modes of deformation of a slightly flexible, lightly damped structure. The primary advantage of this method stems from the improved likelihood of reasonable estimation of structural damping characteristics in early stages of design and of approximate measurement of these characteristics prior to launch. Equations of motion constructed for this model are linearized in the deformation coordinates, but they remain nonlinear in "rigid body motion" coordinates, thus accommodating large angular motions of bodies undergoing small elastic deformations.

Although the modal model has not previously been used in the present application, it is a familiar tool in vibration analysis, and it shows promise as the most comprehensive of the three methods in applications to non-specifically damped structures and therefore to spacecraft spinning unstably about principal axes of least moment of inertia.

I. INTRODUCTION TO THE PROBLEM

The problem of the effects of energy dissipation on the free body motions of space vehicles was first met by JPL personnel on February 1, 1958, with the unexpected departure of *Explorer I* from an initial nominal state of spin about an inertially stationary axis of body symmetry. The historical background of this problem is of interest, and an attempt has been made in Appendix A to record in some detail available information concerning its origins.

Simply stated, the underlying principle is the following: An isolated physical system, undergoing motion which gives rise to relative motion of its parts and consequent dissipation of mechanical energy, approaches in time the motion of minimum mechanical energy consistent with preservation of angular momentum. Since for a rigid body the minimum energy state for a given angular momentum is "spin" about the principal axis of maximum moment of inertia, it is reasonable to surmise that this is the only stable motion for a real space vehicle (slightly nonrigid and dissipative) in an essentially torque-free environment. Although this proposition has never been proven in wholly rigorous fashion, it is the basis for numerous technical papers and reports (cited in Appendix A), and it must suffice also for the present report.

Immediate practical concern is not with the validity of the above proposition, which is widely accepted, but with the difficulties of treating its consequences analytically. If it is accepted that a slender cylindrical spacecraft (e.g., *Explorer I*) initially spinning about an inertially stationary axis of symmetry is in an unstable configuration, so that its symmetry axis must in some way depart from its nominal attitude and, in fact, eventually rotate in a plane in inertial space which is normal to that nominal line, there remains the important problem of predicting these motions as explicit functions of time. On the other hand, if the spacecraft is inertially a short, fat cylinder spinning about its symmetry axis, it may be of interest to predict the rate and manner in which initial deviations from the nominal stable spin are "damped out." The development of methods of analysis of these motions is recorded in this report.

II. PRELIMINARY CONSIDERATIONS

A. Definitions

The word "stable" is in such common and varied use today, in applications both technical and nontechnical, that particular care must be taken with definitions.

Since *motion,* which is the time history of the position, orientation, and deformation of a system, can always be conceived as a solution to a set of differential equations, *motion stability* (and the more restricted term "attitude stability") can be defined in a wholly mathematical fashion (Ref. 1), which will be verbalized here.

A solution to a differential equation is *Lyapunov stable,* or simply *stable,* if for all initial conditions sufficiently "close" to those of the test solution under study the perturbed solution remains for all time *arbitrarily* "close" to the test solution. (The word "close" may refer to any of various norms of vectors between two points in the "state space," which is the space defined by all coordinates, their first t-derivatives, and t, where t is normally time.)

A solution as above is *asymptotically stable* if under the above conditions the perturbed solution approaches coincidence with the test solution as time approaches infinity. A solution that is not stable is *unstable.*

Frequently it is convenient to consider the stability of a zero solution of a set of equations by linearizing in the variables and perturbing the linearized equations. As indicated in Ref. 1, Lyapunov has shown that (a) if the solution to the linearized equations is unstable, so also is the corresponding solution to the nonlinear equations, and (b) if the solution to the linearized equations is asymptotically stable, so also is the corresponding solution to the nonlinear equations. If, however, the linearized equations have a solution that is stable but not asymptotically so, no conclusion is available regarding the stability of that solution of the nonlinear equations; in this event the latter solution will be called *infinitesimally stable.*

A second group of words used equivocally in the literature is that group used to describe rigid body motion, e.g., precession, nutation, spin.

At least three reasonable alternatives may be adopted in constructing these definitions; they may be based on kinetics, kinematics, or etymology and classical usage. On a kinetical basis, *precession* may be defined as that motion of the spin axis of a spinning body that *results from an applied torque.* Examples are the precession of the equinoxes and the precession of a top supported noncentroidally. The term *nutation* is then applied by the kinetic school to the spin axis motion that is *independent of torque.* Thus the nodding of a noncentroidally supported top, which is due to initial conditions and not a fundamental consequence of the applied torque, is called nutation. Also (and here is the point of digression), the *torque-free motion* of the spin axis of a body is called nutation. This set of definitions based on kinetics has been adopted in much current literature (Refs. 2-6).

The alternative kinematical basis suggests the following formal definitions: Consider the classical Euler angles illustrated in Fig. 1. Note that the symbols ψ, θ, ϕ are adopted for the sequence of rotations from the reference frame A (with axes A_1, A_2, A_3) through frames B and C to body-fixed frame D (with axes D_1, D_2, D_3 customarily fixed along principal body axes). Unfortunately, conventions in selecting these symbols are also not well defined (see Goldstein's footnote in Ref. 7, page 108). Now without regard to the question of the cause of motion, one

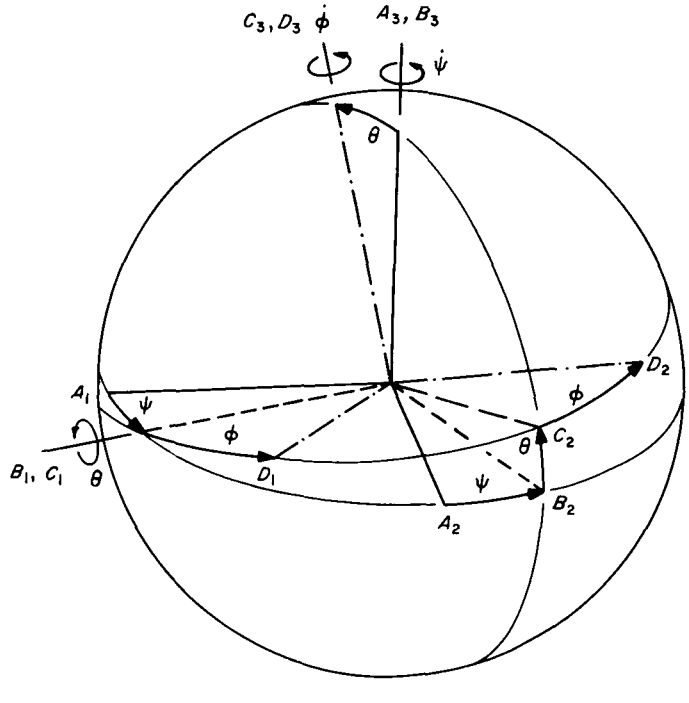

Fig. 1. Euler angles

may define precession as $\dot{\psi}$, nutation as $\dot{\theta}$, and spin as $\dot{\phi}$. Then ψ, θ, ϕ are, respectively, the angles of precession, nutation, and spin.

By these definitions, a symmetric top with spin axis moving in a conical locus is precessing, and nodding of the top is nutation, as previously. But the torque-free motion of the spin axis of a symmetric body on a conical locus is also precession, and any nodding about this locus due to body asymmetry is called nutation. Thus a body such as the Earth is simultaneously undergoing both free and forced "precession," and, when superposed, the "free precession" appears *in inertial space* as nutation (see Ref. 7, page 175). By the kinematical definition, then, a given motion can appear as precession in one reference frame and nutation in another.

The preceding kinematical definitions seem to be the convention adopted in the preponderance of modern literature (e.g., Ref. 7), and the precedent is followed formally in this report, although usage of the controversial terms is limited where feasible to conform also to more classical conventions.

The classical references examined (e.g., Ref. 8) seem to reserve the words precession and nutation for application to the "coning" and nodding of the spin axis of a body under torque, as in the cases of the conventional top and the forced motion of the Earth. The torque-free rigid body motion is often called "Poinsot motion," and this unambiguous phrase is adopted here. The roots of the words precession and nutation support this usage. Nutation means, literally, nodding. And precession, in application to the equinoxes, for example, describes an advancement or a preceding of the equinoctial lines ahead of the position they might be expected to occupy on the basis of astronomical measurements of the previous year.

B. Rigid Body Rotational Motion and Stability

The equations of motion of a rigid body, one point of which is "fixed," were first formulated by Euler in 1750 (Ref. 9), and the special case of torque-free motions (i.e., motions under the action of forces that have a zero resultant about the body's mass center) was subsequently studied by many investigators, notably Euler, (Ref. 10), Poinsot (Ref. 11), who offered a complete geometrical solution, and Jacobi (Ref. 12), who completed an analytical solution in terms of elliptic functions.

From these studies emerged the conclusion that for stable free rotation of a rigid body in inertial space the angular velocity vector must remain parallel to a centroidal principal axis of *either* maximum *or* minimum moment of inertia; i.e., the body must "spin" about an inertially fixed principal axis for which the centroidal moment of inertia is extremal. In Appendix B this result is proved using methods not dependent upon knowledge of the complete solution.

As one of the methods to be applied to (nonrigid) spacecraft in this report depends heavily on familiarity with solutions for rigid body motion, a description of Poinsot's construction appears in Appendix C.

C. Attitude Stability of Nonrigid Bodies

The attitude stability criterion for nonrigid bodies is developed here, following the general line of reasoning first advanced in Refs. 13 and 14.

Consider a nonrigid body rotating initially about a centroidal principal axis in a deformed state in which there is no relative motion of parts, so that every point of the body is maintaining a fixed distance from every other point of the body. Let I_1 be the moment of inertia about this axis, and $\boldsymbol{\omega}_1$ be the angular velocity,[1] so that the initial angular momentum is given by $\mathbf{H} = I_1\boldsymbol{\omega}_1$ and the initial kinetic energy by $T_1 = \frac{1}{2}(I_1\omega_1^2)$, where $\omega_1 = |\boldsymbol{\omega}_1|$.

If the body is then subjected to an infinitesimal perturbation, arbitrarily small changes in angular momentum and kinetic energy will result, and the body will in general no longer be rotating about a principal axis. In this configuration, oscillatory stresses in the body give rise to relative motions of points in the body, which are accompanied by losses of mechanical energy due to hysteresis in the structural materials, friction in joints, viscosity of enclosed fluids, etc.

As no further change in angular momentum can occur, energy cannot be dissipated without limit; consequently the body must in time approach again a state in which no relative motions occur. That is, it must again rotate as if it were a rigid body spinning about an inertially fixed principal axis.

As a further consequence of angular momentum conservation, this terminal body-axis of spin must be arbitrarily close to alignment in space with the initial spin axis orientation, and if infinitesimal changes from the

[1]Vectors are represented by bold-face type except when treated as column matrices and enclosed in braces { }.

initial perturbation are neglected, the angular momentum is given by

$$\mathbf{H} = I_2\boldsymbol{\omega}_2 = I_1\boldsymbol{\omega}_1$$

where I_2 is the moment of inertia of the newly deformed body about its terminal angular velocity line.

The final kinetic energy is $T_2 = \frac{1}{2}(I_2\omega_2^2)$, so that the ratio of kinetic energies is given by

$$\frac{T_1}{T_2} = \frac{\frac{1}{2}(I_1\omega_1^2)}{\frac{1}{2}(I_2\omega_2^2)} = \frac{H^2/I_1}{H^2/I_2} = \frac{I_2}{I_1}$$

As $T_2 < T_1$, it follows that $I_2 > I_1$, so the moment of inertia about the final body-axis of spin must exceed that of any initial body-axis of spin, unless they are identical (in which case the infinitesimal changes neglected above become relevant).

For bodies only slightly nonrigid, moments of inertia in the deformed states above differ little from those in the unstressed state. *Hence the only stable rotational motion for free nonrigid dissipative bodies is spin about an inertially fixed centroidal principal axis of maximum moment of inertia.*

The preceding argument does not constitute a proof of its conclusion in that it relies upon several unsubstantiated assumptions. Principal among these are the assumptions that (1) for "rigid body motion" of a nonrigid body, the angular velocity vector must parallel a principal axis, and (2) the total mechanical energy of a deformable body is approximately equal to the kinetic energy, so that changes in potential energy ("strain energy") can be neglected.

The latter assumption is dismissed from discussion here, with the comment that it is examined briefly in Ref. 2. Implications of assumption (1) are more crucial in this context. The validity of this assumption hinges primarily on the character of the deformability of the body; if every point of the body can move relative to every other point, as in an elastic solid, the assumption may well be valid, but if the body consists of separate rigid portions that can move relative to each other in restricted ways, the body may be capable of motions that violate this assumption. Although real physical bodies are in the former class, idealizations for analysis are typically in the latter, so it becomes important to appreciate the nature of this assumption in constructing a model for analysis (or in designing a damper). Appendix D contains examples of idealized flexible dissipative bodies that can rotate stably about principal axes of *minimum* moment of inertia. Nonetheless, the stability criterion developed above is accepted as a working hypothesis in this report.

D. The Space Environment

The idealized "force-free" spacecraft environment is evidently unrealizable, and the validity of applying the results which follow to a particular spacecraft on a given mission must be examined in each individual case. Unfortunately, this question is not resolved by the comparison of orders of magnitude of applied torques, as the effects under study here are not due to external forces. It is necessary instead to compare the motions due to applied torques to those due to energy dissipation, as predicted by the methods which follow.

This objective may be accomplished in a preliminary sense by the study of rigid body motions due to an idealization of dominant external torques. These motions may be induced by gravity, electromagnetic effects, solar radiation absorption and radiation emission, atmospheric drag, spacecraft mass-expulsion devices (which may be leaking valves or "outgassing" solids), and various other forces which may dominate the motions. If the preliminary rigid body analysis indicates motions that dominate or are dominated by the motions predicted by the free body analysis which follows, the way is clear to disregarding one or the other; but if these predicted motions are of similar magnitude, new analysis procedures will be required. In the development of the third method which follows (the modal model method), this necessity has been anticipated to the extent of providing, in general vector form, equations of motion that include expressions for applied forces, although these forces are dropped in the matrix equations which are presented for integration as the final equations of motion. The forced motion equations are so complex as to be of little immediate practical value. There is in this report no serious attempt to treat the "mixed" problem, for which neither external torque nor internal damping is a dominant influence on rotation.

III. ALTERNATIVE METHODS OF SOLUTION

A. The Energy Sink Model Method

As a first approach to analyzing the behavior of slightly nonrigid energy-dissipating bodies in space, one might reasonably consider the effect on rigid body Poinsot motion (See Appendix C) of a gradual reduction of kinetic energy, with no corresponding change in angular momentum, and no explicit consideration of deformations of the system. In this method the spacecraft is modeled as a rigid body with an "energy sink," i.e., a device which has no moving parts but which dissipates mechanical energy. (In many applications, the device is allowed internal movement, but this is ignored in the analysis of the motion of the spacecraft.)

It should be acknowledged at the outset that internal contradictions give this approach a distinct "engineering flavor." The idealized energy sink violates Newton's laws in producing changes in motion without applying forces. Furthermore, the use of the results of Appendix C for free rigid body motion implies acceptance of Euler's dynamical equations, and a first integral of these equations is the statement of conservation of kinetic energy; one cannot rigorously retain the results of these equations without accepting this consequence of energy conservation, and yet this is what is proposed for the energy sink method. On the other hand, it is quite reasonable to argue that the motion of the spacecraft over any precession cycle is nearly the same as that of a rigid body with the same angular momentum and kinetic energy. Applying this argument repeatedly, allowing incremental reductions in kinetic energy with each cycle, one obtains, in effect, the energy sink approximation.

If the acceptability of the approach can be established, the major remaining difficulty is in the determination of the appropriate rate of dissipation of energy. If this problem can be solved, the classical equations and constructions for rigid body motions can then provide a sufficient basis for completing the analysis. In Section IV, various published encounters with this problem are discussed. It will become clear that for sufficiently specific energy dissipation mechanisms which do not involve large accelerations of mass relative to the body of the spacecraft, the energy sink model provides valuable estimates of rotational motions. Even in the general case, this method, when supplemented with more rigorous approaches (to be described) may offer useful insight into spacecraft behavior and thus provide a check on the results of more abstract analysis.

B. The Discrete Parameter Model Method

As a second approach to the analysis of spacecraft motions, one might construct, with full rigor, equations of motion for a suitable idealized model of the spacecraft, and then integrate these equations on a digital computer. The accuracy required of the model depends upon the intended application. If the spacecraft is subject to substantial external torques, or is expelling mass, the accuracy with which the model represents the mechanism of energy dissipation within the system is unimportant; in fact, internal damping can probably be neglected. Or, if the subject is a freely rotating spacecraft with specific energy-dissipation mechanisms (e.g., dashpots) connecting its component parts, an accurate model may be realizable. For spacecraft nominally spinning stably about principal axes of maximum moment of inertia, some kind of specific damper would probably be incorporated in order to attenuate deviations from the nominal motion, and for this case an accurate model of the energy dissipation mechanism might be constructed. Several of the references cited adopt this method, as will be noted in detail in Section V.

The severe limitations of this approach in application to the present problem stem from the substantial difficulty in constructing a sufficiently accurate model for complex spacecraft structures lacking specific dampers. Energy dissipation for such structures occurs as a consequence of friction in joints, hysteresis losses due to stress oscillations, viscous fluid flow in propellant tanks, flow lines, and batteries, and diverse secondary damping mechanisms. Attempts at comprehensive treatment of structural damping have been made in the literature of vibration analysis. One approach is the construction of a discrete parameter analytical model composed of rigid bodies or mass points connected by linear springs and dashpots. Although analytical difficulties are substantial, the failure of this approach is primarily a consequence of the virtual impossibility of obtaining from experimental data reasonably valid numbers for the properties of the dashpots connecting discrete masses of the system. This difficulty in constructing a discrete parameter model restricts the utility of this second approach to exclude the problem of the rotation of a nonrigid spacecraft without a specific damper.

C. The Modal Model Method

The recommended solution to this dilemma is the solution which has evolved for the analysis of vibrations

about stable equilibrium of non-specifically damped structures, that is, transformation to modal deformation coordinates. The parallel between the small vibration problem and the problem of general motions of flexible spacecraft is not complete, and care must be taken in applying the methods developed for linearized vibration equations to the essentially nonlinear equations of the present problem. This step requires a partial linearization of the equations of motion of the rotating spacecraft, so that the system is restricted to small deformations about a configuration that is performing large angle rotations in space. The necessary equations are derived in Section VI.

As background for the application of modal coordinates to the present problem, the application of this method to vibration about a stable configuration at rest is briefly qualitatively discussed. (See Ref. 15 for a comprehensive treatment.)

For the analysis of small-amplitude free vibrations of a structure, a discrete parameter model comprised of rigid bodies and linear springs is often used. At JPL, a computer program was conceived for this purpose in 1959. Early versions of this program (called STIFFEIG), with the capacity of determining the first six eigenvalues and eigenvectors of structures with 130 degrees of freedom, have been applied to JPL spacecraft and spacecraft components with increasing success; fundamental natural frequencies of vibration have been calculated within 2% of test values for solar panels and within 10% of test values for complex structures such as *Ranger* spacecraft, and mode shapes have been qualitatively good for the first few natural modes. As the model for this analysis does not include damping, the program has merely to construct a dynamical matrix as a combination of stiffness and mass matrices and then determine the eigenvalues (for natural frequencies) and eigenvectors (mode shapes) of this matrix. As can be shown theoretically and experimentally, the natural frequencies of typical lightly damped structures are not substantially affected by damping. Although for the formal existence of normal modes of vibration restrictions must be imposed on the damping matrix,[2] as a practical matter the eigenvector for the undamped model provides good representation of normal modes of vibration measured in tests. Accuracy in estimating the frequencies and mode shapes depends of course on the number of degrees of freedom allowed by the computer program and the effectiveness with which these are used. Work currently under way at JPL should materially improve the capacity of the Laboratory staff to predict these free vibration characteristics of spacecraft. Furthermore, these predictions will continue to be routinely made for purposes of vibration analysis; possible utilization of these results in studying the rotational motions of spacecraft is an unexpected bonus.

Vibration analysts are confronted with the necessity of estimating the damping characteristics of a structure only when considering the response to periodic forces of frequency near a natural frequency. Under resonance conditions, linearized undamped equations indicate infinite amplitudes of oscillation, as is well known, and this unacceptable result is modified by damping.

The means of incorporating damping is at issue. It has been noted that determination of the characteristics of "equivalent dashpots" is not generally feasible. Furthermore, any crude estimates that might be made must be expected to fail the test for the existence of normal modes. Yet tests indicate that the assumption of the existence of normal modes is reasonable for lightly damped structures. Thus one is led to ignore the question of the detailed local description of the physical mechanism of energy dissipation within the vehicle, and simply to assume that the damping is such that normal modes exist. As the existence of normal modes is equivalent to the existence of a transformation matrix which provides an equation of motion in terms of diagonal matrices, the result may be written[3]

$$\lceil M \rfloor \{\ddot{\eta}\} + \lceil C \rfloor \{\dot{\eta}\} + \lceil K \rfloor \{\eta\} = \{0\} \tag{1}$$

so that individual scalar equations appear in the form

$$M_i\ddot{\eta}_i + C_i\dot{\eta}_i + K_i\eta_i = 0 \tag{2}$$

or, after dividing by M_i and making the obvious definitions,

$$\ddot{\eta}_i + 2\zeta_i\Omega_i\dot{\eta}_i + \Omega_i^2\eta_i = 0 \tag{3}$$

Here η_i represents the amplitude of response in the ith mode, Ω_i is the ith undamped natural frequency, and ζ_i is the percentage of critical damping in the ith mode. Since for $\zeta_i << 1$ frequency is essentially independent of damping, the ith eigenvalue of the matrix

[2]As noted in Ref. 15, page 313 and its footnote reference, a necessary and sufficient condition for the existence of normal modes is that the damping matrix be diagonalized by the same transformation that uncouples the undamped system.

[3]Square matrices are enclosed in square brackets [ ], column matrices in braces { }.

characterizing the model with damping may be accepted. Now, for the equations for vibration response in the ith mode, the damping constant ζ_i is required. Fortunately, this number is much more easily estimated or measured than the elements of the original damping matrix which it represents, at least for the lower (and dominant) modes. This is a primary justification for transformation to normal coordinates η_i in vibration analysis; the consequent uncoupling of the equations is another.

Since 1961, "modal survey" tests have been routinely performed on JPL spacecraft and major spacecraft components. Among the objectives of these tests are the measurements of natural frequency Ω_i, damping ratio ζ_i, and mode shape, for several modes. In the most recent of these tests, these objectives are met for the first six vehicle bending modes, a torsional mode, and two component (solar panel) modes. Damping constants for these tests range from 0.5 to 5%.

Experimental determination of modal damping for incorporation in modal models for vibration analysis is not at all new; the method was used extensively in the 1940's. Reference 16 contains results of tests on a modified full-scale airplane wing (for which the damping constant measures from 0.2 to 0.6% for the first mode, showing a variation with amplitude).

Although the difficulties of such tests as these must not be minimized, they seem to provide the most accurate and reliable estimate available for the energy-dissipation characteristics of a complex structure, which leads one to the firm conclusion that the use of modal coordinates offers the most promising path to the prediction of the effects of energy dissipation on the free rotations of spacecraft.

IV. THE ENERGY SINK MODEL

A. Poinsot Motion Modified for Energy Dissipation[4]

Consider first the effect on Poinsot motion (Appendix C) of a gradual reduction in kinetic energy T. If one adopts the interpretation of Poinsot motion as that described by the rolling of the inertia ellipsoid on the invariable plane, with the ellipsoid centroid fixed a distance $(2T)^{1/2}/H$ above the plane, it is clear that the effect of reduction of T is a lowering of the centroid. Evidently the lowest possible elevation of the centroid places the point of contact (the pole) on the shortest semi-axis of the ellipsoid. This corresponds to rotation about the axis of maximum moment of inertia, which has been noted previously to be the minimum energy rotation consistent with preservation of angular momentum. This state is approached asymptotically in time.

As noted in Appendix C, each pair of polhodes corresponds to a unique set of initial conditions, and hence, for a given angular momentum, to a specified kinetic energy. Reduction of kinetic energy therefore implies transition from one polhode to another. Thus, in a qualitative way, the spacecraft behavior can be visualized by sketching a new polhode for the dissipative body. Such a sketch appears in Fig. 2, which depicts a single hypothetical polhode for the same body used for the Poinsot polhode representation in Appendix C (Fig. C-2). In Fig. 2 the body is assumed to be nominally spinning about the 1-axis initially; the departure of the polhode from the neighborhood of this axis illustrates the instability of the initial nominal motion. It may be observed from this figure that a fundamental transition in the type of motion occurs when the polhode crosses a separatrix. Note that the separatrix corresponds to kinetic energy $T = H^2/2I_2$.

[4]Unless the reader is intimately familiar with the classical results for rigid body motion, he should examine Appendix C, "Poinsot's Construction for Free Rotation of Rigid Bodies."

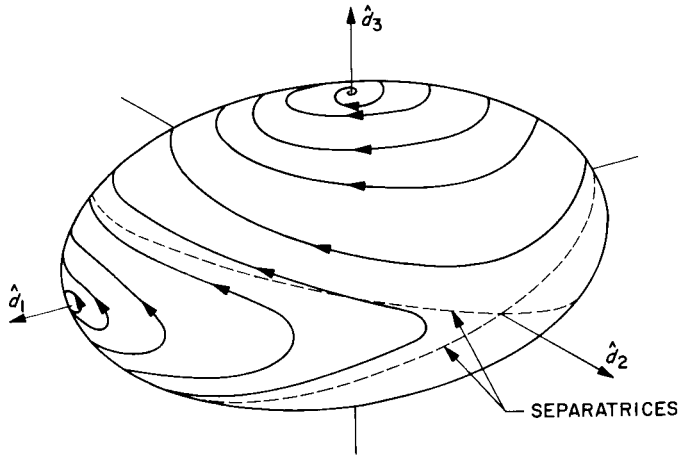

Fig. 2. A hypothetical polhode for a dissipative body with $I_3 = 3I_2/2 = 2I_1$

Figure 3 is a similar sketch of a polhode for a dissipative symmetric body, and here the motion is substantially easier to visualize. In terms of the classical "rolling cone" geometrical interpretation (see Appendix C), it appears that the half-angle of the body cone (called β) is gradually increasing. In view of the relationship

$$\tan\theta = (I_1/I_3)\tan\beta \tag{4}$$

between β and the nutation angle θ, it is evident that the motion is one of spin-plus-precession on a cone of slowly changing nutation angle θ.

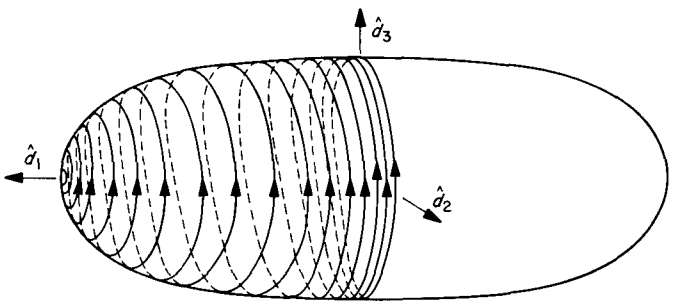

Fig. 3. A hypothetical polhode for a symmetric dissipative body

As each Poinsot polhode corresponds to a unique kinetic energy, each point on a dissipative polhode has associated with it a particular kinetic energy T and a particular nutation angle θ, so it must be possible to relate θ and T. For the symmetric body, θ is constant for a given Poinsot polhode, so there is a simple "one-to-one" relationship between θ and T; but for the general case the relationship is more complex. As shown in Appendix C, however, for asymmetric rigid bodies θ varies between an upper and lower limit, and there are strong analytical similarities between the symmetric case and the asymmetric case when θ is extremal. Thus one might hope to obtain simple expressions for the unique relationship between T and the extremal values of θ, called θ_u and θ_l for upper and lower limits respectively.

Consider first the case for which the pole is in the neighborhood of the 3-axis (above the separatrix in Fig. 2, so $T < H^2/2I_2$), and for which θ is at its upper-limit value θ_u. This case is illustrated in Fig. 4, where it is indicated that $\mathbf{H}$ and $\boldsymbol{\omega}$ lie at this time in the $\hat{\mathbf{d}}_3, \hat{\mathbf{d}}_2$ plane, where the 2-axis is associated with the intermediate moment of inertia.[5] Thus in the general expressions

$$\left.\begin{aligned} H^2 &= I_1^2\omega_1^2 + I_2^2\omega_2^2 + I_3^2\omega_3^2 \\ 2T &= I_1\omega_1^2 + I_2\omega_2^2 + I_3\omega_3^2 \end{aligned}\right\} \tag{5}$$

where $H = |\mathbf{H}|$, the term ω_1 is zero at the moment considered. It is evident in the figure that

$$\sin\theta_u = \frac{I_2\omega_2}{H}$$

[5]Unit vectors are distinguished by a caret ($\wedge$).

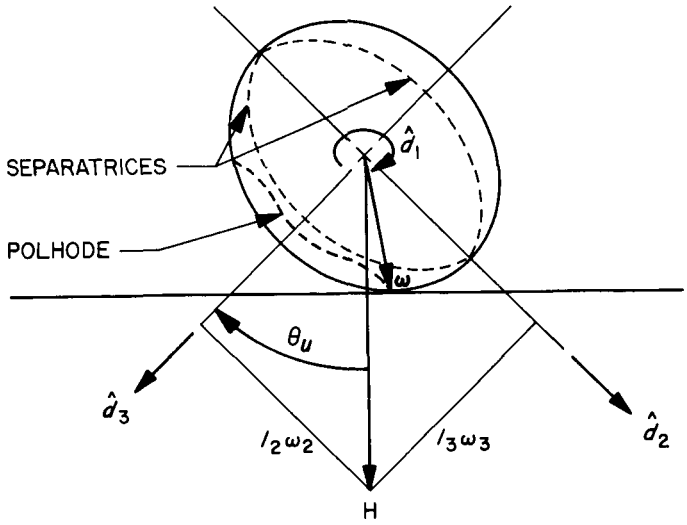

Fig. 4. Poinsot motion when θ is maximal

so that

$$\sin^2\theta_u = \frac{I_2^2\omega_2^2}{H^2} = \frac{I_2}{H^2}(2T - I_3\omega_3^2)$$

$$= \frac{I_2}{I_3H^2}(2I_3T - H^2 + I_2^2\omega_2^2)$$

Manipulation yields

$$\sin^2\theta_u = \frac{I_2(2I_3T - H^2)(1 - I_2/I_3)}{H^2(I_3 - I_2)} + \frac{I_2^3\,\omega_2^2(I_3 - I_2)}{I_3H^2(I_3 - I_2)}$$

or

$$\sin^2\theta_u = \frac{I_2(2I_3T - H^2)}{H^2(I_3 - I_2)} + \frac{I_2^2}{I_3H^2(I_3 - I_2)}\left[-2I_3T + H^2 + I_2\omega_2^2(I_3 - I_2)\right]$$

By substituting (5) into the expression above in brackets, it is easily shown that this expression is zero. This leaves the result[6]

$$\sin^2\theta_u = \frac{I_2(2I_3T - H^2)}{H^2(I_3 - I_2)} \tag{6}$$

A wholly parallel development for the case of minimal θ yields

$$\sin^2\theta_l = \frac{I_1(2I_3T - H^2)}{H^2(I_3 - I_1)} \tag{7}$$

[6]This result appears in Refs. 17 and 18.

Thus, in the polhode region considered, the extremal values of θ are simply related to T. In those regions of the ellipsoid for which the Poinsot polhodes encircle the 1-axis, it becomes convenient to transform to a new set of coordinates. It is convenient now to redefine the Euler angle set so that θ is the angle between the body axis represented by the unit vector $\hat{\mathbf{d}}_1$ and the angular momentum vector $\mathbf{H}$, whereas in the previous development θ was the angle between $\hat{\mathbf{d}}_3$ and $\mathbf{H}$. In terms of Fig. 1, defining Euler angles, this is a change from ψ, θ, ϕ rotations about A_3, B_1, C_3 to rotations about A_1, B_2, C_1. With this change to a new definition of θ, Eqs. (6) and (7) change only by exchanging subscripts 1 and 3. In the case of dissipative bodies, θ changes as T diminishes; for the example illustrated in Fig. 2, the transformation of coordinates is imposed when the dissipative polhode crosses the separatrix, i.e., when $T = H^2/2I_2$.

For the symmetric case, with $I_2 = I_1$, Eqs. (6) and (7) coalesce, and the distinction between θ_u and θ is lost; thus the result is

$$\sin^2\theta = \frac{I_1(2I_3T - H^2)}{H^2(I_3 - I_1)} \tag{8}$$

for all points on a polhode, and θ is always the angle between the axis of symmetry and the angular momentum line.

Following Armstrong,[7] one may define

$$\lambda_{ij} = \frac{I_i}{I_j} - 1 \tag{9}$$

and for the same value of i

$$T_i = \tfrac{1}{2}(I_i\omega_i^2) \equiv \frac{H^2}{2I_i} \tag{10}$$

and finally, holding i,

$$T_{ri} \equiv \frac{T}{T_i} \tag{11}$$

Now Eqs. (6)–(8) may be written in a more revealing manner. The symmetric body equation (8), for example, becomes, after dividing numerator and denominator by I_1I_3,

$$\sin^2\theta = \frac{2T - 2T_3}{2T_3\lambda_{31}}$$

so that

$$\frac{T}{T_3} = T_{r3} = 1 + \lambda_{31}\sin^2\theta \tag{12}$$

[7]In Ref. 19, Armstrong defines parameters as above and displays their relationship graphically. (See Fig. 5 for the special case of rod-like symmetric bodies.)

The equations (6) and (7) for the extremal nutation angles of an asymmetric body appear as (12), with altered subscripts, and consideration of rotation in another polhode region (nominal spin about a different axis) results in still different subscripts; so the general equation

$$T_{ri} = 1 + \lambda_{ij} \sin^2 \theta_n \tag{13}$$

where n may be u, l, or blank, is of great interest. This result is presented graphically in Fig. 5. In application to a symmetric body, i always represents the symmetry axis, so the extreme left of the diagram applies to rods, the center to spheres, and the right side to disks. As energy is dissipated, the disk approaches pure spin about its symmetry axis ($T_{ri} = 1$), and the rod-like body departs from this state, as indicated by the arrows.

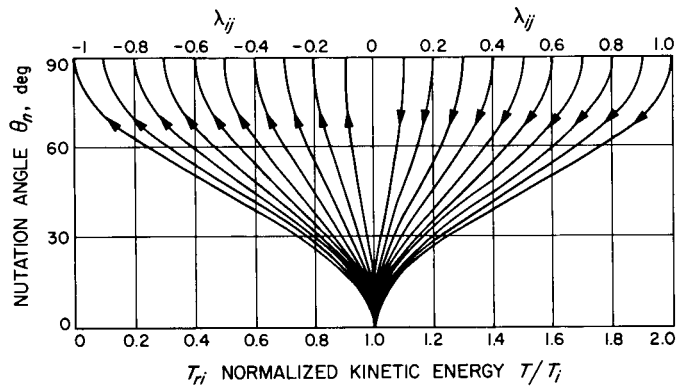

Fig. 5. Relationship among kinetic energy, nutation angle, and inertia ratio

In application to asymmetric bodies, i represents the axis in whose neighborhood the polhode appears at a given time (thus never the intermediate axis), and the value of j corresponds to the intermediate axis for θ_u and the other extremal axis for θ_l; thus the figure shows that θ_u and θ_l increase (at different rates) while the polhode is in the neighborhood of the axis of least moment of inertia. When the separatrix is crossed (not evident on chart), the angles are redefined and there is a discontinuous shift to the right half of the chart.

To obtain a more specific indication of the way in which nutation angle rates vary with energy loss, differentiate (13) to obtain

$$\dot{T}_{ri} = \lambda_{ij} \dot{\theta}_n \sin 2\theta_n \tag{14}$$

Or, if the more explicit equations (6)–(8) are differentiated (using Eq. 8, for example), one obtains[8]

$$\sin\theta \cos\theta \, \dot{\theta} = \frac{I_1 I_3 \dot{T}}{H^2 (I_3 - I_1)} \tag{15}$$

[8]This result appears in Refs. 17, 13, and other cited references.

from which it is again evident that, as T diminishes, θ diminishes if $I_3 > I_1$ and increases if $I_3 < I_1$. A basis for approximating the motion of slightly flexible dissipative bodies is provided by (15) and analogous expressions for θ_u and θ_l in the case of the asymmetric body. It might be emphasized that the θ, T relationships above apply strictly only to rigid bodies; the application of (15) to nonrigid dissipative bodies is a reasonable approximation only when $\dot{T}$ is very small. With this restriction, however, it appears that there are now in hand formulas for predicting the time behavior of the critical parameters of the motion, if only the time rate of dissipation of energy $\dot{T}$ can be estimated. Methods used to determine $\dot{T}$ for various systems are treated in the following sections.

B. The Acceleration of a Particle Attached to a Free Rigid Body

Fundamental to the energy sink method is the assumption that the damping device extracts energy without applying forces to the rigid body (or one may say that the forces are so small as to have negligible direct effect on rigid body motion). If, however, the damper involves motion of some mass relative to the spacecraft (as must all real internal dampers), the forces applied by the spacecraft to this mass are of fundamental importance. Thus the analyst is in the position of emphasizing the "action" and ignoring the "reaction." If this can be justified in a tentative way, one can idealize the damper as a particle, set of particles, or rigid body, connected to the rigid spacecraft by springs and/or dashpots, so that equations of motion may be written for the damper. If for a particle this equation is written as

$$\mathbf{F} = m\,{}^N\mathbf{a}^P \tag{16}$$

where $\mathbf{F}$ is the contact force applied by the spacecraft to the particle P, m is the mass of P, and ${}^N\mathbf{a}^P$ is the acceleration of P in a Newtonian (inertial) reference frame N, then the acceleration can be written in terms of motion relative to the spacecraft and that due to the motion of the point of attachment, and $\mathbf{F}$ can be expressed in terms of relative motions and connecting devices (springs, dashpots, or whatever). Thus equations may be constructed in terms of the relative motion variables as unknowns, with the spacecraft motion specified as that of Poinsot motion. The solution to these equations might then be used to estimate $\dot{T}$, the rate of dissipation of energy. To this end, ${}^N\mathbf{a}^P$ is derived below.

Let D represent a rigid body with mass center at O, P an attached particle, and Q the point in D occupied by P when the system is in rest equilibrium. As the rigid body is treated as though free above, its mass center O may be presumed to be at rest in some inertial frame. For generality, however, and in recognition of the error in neglecting forces applied by the particle to the spacecraft, the acceleration ${}^N\mathbf{a}^O$ of O in N is retained for now. If, then, some other point O' is fixed in N, ${}^N\mathbf{a}^P$ is given by

$${}^N\mathbf{a}^P = \frac{{}^N d^2}{dt^2}(\mathbf{O'P}) \tag{17}$$

where the pre-superscript N denotes the frame of differentiation and $\mathbf{O'P}$ is the position vector from O′ to P. Geometry provides

$$\mathbf{O'P} = \mathbf{O'O} + \mathbf{OP} = \mathbf{O'O} + \mathbf{OQ} + \mathbf{QP}$$

so that

$$ {}^N\mathbf{a}^P = {}^N\mathbf{a}^O + \frac{{}^N d^2}{dt^2}\mathbf{OQ} + \frac{{}^N d^2}{dt^2}\mathbf{QP} $$

Because in general, for any two reference frames N and R,

$$ \frac{{}^N d}{dt}(\quad) = \frac{{}^R d}{dt}(\quad) + {}^N\boldsymbol{\omega}^R \times (\quad) \tag{18} $$

where ${}^N\boldsymbol{\omega}^R$ is the angular velocity of R relative to N, the acceleration becomes

$$ {}^N\mathbf{a}^P = {}^N\mathbf{a}^O + \frac{{}^N d}{dt}\left(\frac{{}^D d}{dt}\mathbf{OQ} + {}^N\boldsymbol{\omega}^D \times \mathbf{OQ} + \frac{{}^D d}{dt}\mathbf{QP} + {}^N\boldsymbol{\omega}^D \times \mathbf{QP}\right) \tag{19} $$

The first term in the brackets is of course zero, as **OQ** is fixed in rigid body D; the third term in brackets may be written ${}^D\mathbf{V}^P$, the velocity of P in D. Then, as angular acceleration

$$ {}^N\boldsymbol{\alpha}^D = \frac{{}^N d}{dt}\,{}^N\boldsymbol{\omega}^D $$

Eq. (19) yields

$$ {}^N\mathbf{a}^P = {}^N\mathbf{a}^O + {}^N\boldsymbol{\alpha}^D \times \mathbf{OQ} + {}^N\boldsymbol{\omega}^D \times \frac{{}^N d}{dt}\mathbf{OQ} + \frac{{}^N d}{dt}{}^D\mathbf{V}^P + {}^N\boldsymbol{\alpha}^D \times \mathbf{QP} + {}^N\boldsymbol{\omega}^D \times \frac{{}^N d}{dt}\mathbf{QP} $$

which, with (18), becomes

$$ \begin{aligned} {}^N\mathbf{a}^P = {}^N\mathbf{a}^O &+ {}^N\boldsymbol{\alpha}^D \times \mathbf{OQ} + {}^N\boldsymbol{\omega}^D \times \left(\frac{{}^D d}{dt}\mathbf{OQ} + {}^N\boldsymbol{\omega}^D \times \mathbf{OQ}\right) + {}^D\mathbf{a}^P + {}^N\boldsymbol{\omega}^D \times {}^D\mathbf{V}^P \\ &+ {}^N\boldsymbol{\alpha}^D \times \mathbf{QP} + {}^N\boldsymbol{\omega}^D \times \left(\frac{{}^D d}{dt}\mathbf{QP} + {}^N\boldsymbol{\omega}^D \times \mathbf{QP}\right) \end{aligned} $$

or

$$ \begin{aligned} {}^N\mathbf{a}^P = {}^N\mathbf{a}^O &+ {}^N\boldsymbol{\alpha}^D \times \mathbf{OQ} + {}^N\boldsymbol{\omega}^D \times ({}^N\boldsymbol{\omega}^D \times \mathbf{OQ}) \\ &+ {}^D\mathbf{a}^P + {}^N\boldsymbol{\alpha}^D \times \mathbf{QP} + {}^N\boldsymbol{\omega}^D \times ({}^N\boldsymbol{\omega}^D \times \mathbf{QP}) + 2\,{}^N\boldsymbol{\omega}^D \times {}^D\mathbf{V}^P \end{aligned} \tag{20} $$

It is sometimes convenient to identify individual terms in (20) verbally. The seventh (last) term is a Coriolis acceleration; the third and sixth terms are centripetal accelerations; the second and fifth terms are tangential accelerations; the fourth term is a relative acceleration; and the first term is a reference acceleration. It is noteworthy that relative motion coordinates appear in tangential, centripetal, and Coriolis acceleration terms as well as in the "relative acceleration," so that when (20) is substituted into $\mathbf{F} = m\,{}^N\mathbf{a}^P$, the result is a set of three scalar, coupled differential equations that are linear if the connection force **F** is linear (e.g., springs and dashpots) but which have time-varying coefficients. Thus these equations are not generally amenable to "closed form" solution, and their solutions may represent responses very different from those obtained by

ignoring troublesome terms in the variables. Nonetheless, different authors have offered simplified substitutes for this result, and have operated on them with fruitful results that have some level of plausibility and considerable appeal in the absence of more rigorous alternatives. As the energy sink approach is from its inception nonrigorous, further assumptions of this sort are not inconsistent with the character of the argument. At this point different investigations follow different paths, so the primary papers are discussed separately. It should be noted that all have in common the disregard of spacecraft motions induced by inertial forces from damper motion. Although small, these neglected terms may, in exceptional cases, have substantial effect on damper motion, and thus on dissipation rate, since in motion stability small influences can have large consequences.

C. Application to SYNCOM

In Ref. 5, Eq. 15, Williams records the acceleration expression (20) (lacking only the term ${}^N\mathbf{a}^O$, which is zero for an unaccelerated spacecraft) and then indicates the corresponding scalar equations for the special case of a symmetric body (an approximation valid within 7% for SYNCOM I).

To accomplish this reduction, one first substitutes the analytical rigid body motion solution for the symmetric body (see Appendix C, Eqs. C-11–C-14 into (20). This solution, in terms of angular velocity measure numbers along body-fixed principal axes, is, if $I_2 = I_1$,

$$\left.\begin{aligned} \omega_1 &= -A \sin pt + B \cos pt \\ \omega_2 &= A \cos pt + B \sin pt \\ \omega_3 &= \omega_{30}, \text{ a constant} \end{aligned}\right\} \tag{21}$$

where

$$p = \omega_{30}\left(\frac{I_3}{I_1}\right) - 1$$

and A and B are constants depending on initial conditions. In terms of body-fixed principal axis unit vectors $\hat{\mathbf{d}}_1$, $\hat{\mathbf{d}}_2$, $\hat{\mathbf{d}}_3$, the kinematic vectors in (20) become

$$\left.\begin{aligned} {}^N\boldsymbol{\omega}^R &= \omega_1\hat{\mathbf{d}}_1 + \omega_2\hat{\mathbf{d}}_2 + \omega_3\hat{\mathbf{d}}_3 \\ {}^N\boldsymbol{\alpha}^R &= \frac{{}^Nd}{dt}\,{}^N\boldsymbol{\omega}^R = \frac{{}^Rd}{dt}\,{}^N\boldsymbol{\omega}^R + {}^N\boldsymbol{\omega}^R \times {}^N\boldsymbol{\omega}^R = \dot{\omega}_1\hat{\mathbf{d}}_1 + \dot{\omega}_2\hat{\mathbf{d}}_2 \\ &= -p\,\omega_2\hat{\mathbf{d}}_1 + p\,\omega_1\hat{\mathbf{d}}_2 \end{aligned}\right\} \tag{22}$$

and with the definitions

$$\left.\begin{aligned} \mathbf{OQ} &= x_1\hat{\mathbf{d}}_1 + x_2\hat{\mathbf{d}}_2 + x_3\hat{\mathbf{d}}_3 \\ \mathbf{QP} &= \varepsilon_1\hat{\mathbf{d}}_1 + \varepsilon_2\hat{\mathbf{d}}_2 + \varepsilon_3\hat{\mathbf{d}}_3 \end{aligned}\right\} \tag{23}$$

and

one obtains

$$\left.\begin{aligned} {}^{R}\mathbf{V}^{P} &= \dot{\varepsilon}_1\hat{\mathbf{d}}_1 + \dot{\varepsilon}_2\hat{\mathbf{d}}_2 + \dot{\varepsilon}_3\hat{\mathbf{d}}_3 \\ \text{and} \qquad {}^{R}\mathbf{a}^{P} &= \ddot{\varepsilon}_1\hat{\mathbf{d}}_1 + \ddot{\varepsilon}_2\hat{\mathbf{d}}_2 + \ddot{\varepsilon}_3\hat{\mathbf{d}}_3 \end{aligned}\right\} \tag{24}$$

Substituting (22)–(24) into (20), and then writing $\mathbf{F} = m^{N}\mathbf{a}^{P}$ with $\mathbf{F} = F_1\hat{\mathbf{d}}_1 + F_2\hat{\mathbf{d}}_2 + F_3\hat{\mathbf{d}}_3$, yields the following set of scalar equations of motion:

$$\begin{aligned} -(F_1/m) + \ddot{\varepsilon}_1 - 2\omega_3\dot{\varepsilon}_2 + 2\omega_2\dot{\varepsilon}_3 - \varepsilon_1(\omega_2^2 + \omega_3^2) + \varepsilon_2\omega_1\omega_2 + \varepsilon_3\omega_1(\omega_3 + p) \\ = x_1(\omega_2^2 + \omega_3^2) - x_2\omega_1\omega_2 - x_3\omega_1(\omega_3 + p) \end{aligned} \tag{25}$$

$$\begin{aligned} -(F_2/m) + \ddot{\varepsilon}_2 + 2\dot{\varepsilon}_1\omega_3 - 2\dot{\varepsilon}_3\omega_1 + \varepsilon_1\omega_1\omega_2 - \varepsilon_2(\omega_1^2 + \omega_3^2) + \varepsilon_3\omega_2(\omega_3 + p) \\ = -x_1\omega_1\omega_2 + x_2(\omega_1^2 + \omega_3^3) - x_3\omega_2(\omega_3 + p) \end{aligned} \tag{26}$$

$$\begin{aligned} -(F_3/m) + \ddot{\varepsilon}_3 + 2\omega_1\dot{\varepsilon}_2 - 2\omega_2\dot{\varepsilon}_1 + \varepsilon_1\omega_1(\omega_3 - p) + \varepsilon_2\omega_2(\omega_3 - p) - \varepsilon_3(\omega_1^2 + \omega_2^2) \\ = -x_1\omega_1(\omega_3 - p) - x_2\omega_2(\omega_3 - p) + x_3(\omega_1^2 + \omega_2^2) \end{aligned} \tag{27}$$

The analogous expressions in Ref. 5 correspond to the above when linearized in the variables ε_1, ε_2, ε_3, ω_1, ω_2, and when by selection of initial conditions B is zero. This result, written below, is thus restricted to rigid body motion that is approximately pure spin about the symmetry axis:

$$-(F_1/m) + \ddot{\varepsilon}_1 - 2\omega_{30}\dot{\varepsilon}_2 - \varepsilon_1\omega_{30}^2 = x_1\omega_{30}^2 - x_3(\omega_{30} + p)A\sin pt \tag{28}$$

$$-(F_2/m) + \ddot{\varepsilon}_2 + 2\omega_{30}\dot{\varepsilon}_1 - \varepsilon_2\omega_{30}^2 = x_2\omega_{30}^2 - x_3(\omega_{30} + p)A\cos pt \tag{29}$$

$$-(F_3/m) + \ddot{\varepsilon}_3 = -(\omega_3 - p)A(-x_1\sin pt + x_2\cos pt) \tag{30}$$

The solutions of the preceding linear differential equations with constant coefficients are now available with standard procedures. (The connection force terms F_1, F_2, F_3 are assumed to be linearized expressions for spring–dashpot connections.) Thus these equations provide the basis for study of the rate at which energy is dissipated by a specific small damper in a given location of a fairly rigid spacecraft, spinning with its angular velocity vector inclined at a small angle (arctan A/ω_{30}) from its axis of symmetry. In application to the Hughes SYNCOM, these equations, when supplemented with test data on damper properties, were used in damper design and prediction of rate of decay of the deviations of the satellite from nominal stable spin about a principal axis of maximum moment of inertia. The damper selected was a 7-in.-long, ⅜-in.-diameter straight tube, filled 30% with mercury and placed on a meridian of the cylindrical satellite. The reader is referred to Ref. 5 for specific details.

D. Application to Explorer I

Quite a different approach is adopted by Wells in Ref. 13. This report contains no formal development of kinematics as represented by ${}^{N}\mathbf{a}^{P}$ in (20). Confronted with the much more difficult problem of the large-angle motions of a symmetric satellite in unstable nominal attitude, dissipating energy through complex stress hysteresis and friction effects, the analyst concentrated entirely on the "driving forces," i.e., on the equivalent of the right-hand side of Eqs. (25)–(27). The

driving force is discussed in Ref. 13 in terms of centrifugal forces due to spin, centrifugal forces due to precession, and Coriolis forces due to the combination. These last terms are not those arising from motion of a mass point relative to the satellite, but terms stemming from spin-induced velocity of a point on the satellite relative to the precessing, nonspinning frame (frame C in Figs. 1 and C-5). Thus this relative velocity is given by

$$^{C}\boldsymbol{\omega}^{D} \times \mathbf{OP} = \dot{\phi}\hat{\mathbf{d}}_3 \times (x_1\hat{\mathbf{d}}_1 + x_2\hat{\mathbf{d}}_2) = \dot{\phi}\,(x_1\hat{\mathbf{d}}_2 - x_2\hat{\mathbf{d}}_1) \tag{31}$$

where D and C are the frames in the indicated figures; **OP** is the position vector to mass point P from body mass center; x_1, x_2, x_3 are the nominal coordinates of P in the body;[9] and the unit vectors are as defined in Fig. C-5.

Coriolis accelerations in this sense are therefore given by

$$2^{N}\boldsymbol{\omega}^{C} \times \dot{\phi}\,(x_1\hat{\mathbf{d}}_2 - x_2\hat{\mathbf{d}}_1) = 2\dot{\psi}\hat{a}_3 \times \dot{\phi}\,(x_1\hat{\mathbf{d}}_2 - x_2\hat{\mathbf{d}}_1) \tag{32}$$

After writing $\hat{\mathbf{a}}_3$ in terms of $\hat{\mathbf{d}}_1$, $\hat{\mathbf{d}}_2$, and $\hat{\mathbf{d}}_3$ and performing the multiplication, one obtains the Coriolis acceleration

$$2\dot{\Psi}\dot{\phi}\,[-x_1 \sin\theta\hat{\mathbf{d}}_1 - x_2 \cos\theta\hat{\mathbf{d}}_2 + (x_1 \sin\phi + x_2 \cos\phi)\sin\theta\hat{\mathbf{d}}_3] \tag{33}$$

in which only ϕ is changing with time, as $\phi = \dot{\phi}t$. Hence this Coriolis term represents a driving force along the axis of symmetry with frequency $(\dot{\phi}/2\pi)$. This information may be useful in "tuning" a damper for resonance; this happened accidentally for the "whip" antennas of *Explorer I* (see Appendix A for a detailed description).

Of the centrifugal force terms previously mentioned, one (that due to spin) is evidently constant in the body, and the other (due to precession) varies also with frequency $\dot{\phi}/2\pi$. The magnitude of the latter centrifugal force term was so small for *Explorer I* that it was neglected in the analysis, and attention was focused on the $\mathbf{d}_3$ component (along the symmetry axis) of the Coriolis term in (33). With the corresponding "driving force" applied to the antenna damper idealized as a pendulum with damping and restoring torques at its support point, and with damping data obtained from tests, Wells was able to obtain satisfactory correlation with the observed behavior of *Explorer I*. This suggests that, in specific applications in which the source of energy dissipation can be pinpointed, rather crude approximations can provide meaningful results. It may be emphasized, however, that in "pathological" cases the small terms ignored in such analysis could produce instabilities that completely invalidate the analysis; this is particularly true when terms neglected are variables with periodic coefficients, as consideration of the example of the Mathieu equation[10] makes clear. It should be clear that the approximation employed here is not equivalent to a systematic linearization of any variables; terms are retained that are of the same order of magnitude as those dropped.

Despite such analytical compromises, the results are of interest because they can be compared favorably with limited observations of actual satellite behavior.

[9]One can, for the symmetric body, select the principal axes so that x_1 or x_2 is zero; this simplifies the expression and facilitates comparison with [13].

[10]For the properties of the Mathieu equation $\ddot{X} + (\varepsilon + \delta \sin t)\,X = 0$ see Ref. 1, page 55.

Among the specific results (for which the original work, Ref. 13, is recommended) is the conclusion that the coning angle θ increases exponentially while it is small; i.e., θ is initially roughly proportional to $d\theta/dt$.

E. Applications with Structural Damping

The rate of dissipation of energy for systems with structural damping due to stress hysteresis has been assessed by Thomson and Reiter (Ref. 20) and by Meirovitch (Ref. 21). In the former paper, the development of the relationship from Poinsot motion between $\dot{T}$ and $\dot{\theta}$ for symmetric bodies (Cf. Eq. (6) of (Ref. 20) and Eq. (15) of this report) is followed by the observation that elastic bodies dissipate energy at the rate $\gamma\sigma^2/2E$ per unit of volume per cycle of stress, where σ is stress, E is elastic modulus, and γ is a hysteretic damping factor establishing the fraction of the maximum elastic energy which is dissipated in the course of a stress cycle. The next step is the determination of the dynamic "driving forces" which induce the stress, and here again the acceleration expression is recorded in general form (Cf. Eq. (12) of Ref. 20 and Eq. (20) herein). Progress apparently required immediate approximations, and all terms involving relative motion of particle and spacecraft were suppressed, leaving an expression

$$ {}^N\mathbf{a}^P = {}^N\boldsymbol{\alpha}^D \times \mathbf{OQ} + {}^N\boldsymbol{\omega}^D \times ({}^N\boldsymbol{\omega}^D \times \mathbf{OQ}) \tag{34} $$

Only the second and third of the seven terms in (20) are retained.

In terms of Euler angles and unit vectors previously defined, the angular unit velocity of the spacecraft D is

$$ \begin{aligned} {}^N\boldsymbol{\omega}^D = {} & \hat{\mathbf{d}}_1 (\dot{\psi} \sin\theta \sin\phi + \dot{\theta} \cos\phi) \\ & + \hat{\mathbf{d}}_2 (\dot{\psi} \sin\theta \cos\phi - \dot{\theta} \sin\phi) \\ & + \hat{\mathbf{d}}_3 (\dot{\psi} \cos\theta + \dot{\phi}) \end{aligned} \tag{35} $$

As it has been assumed that $\dot{\theta}$ is small, two of the terms above may be discarded.

For the free symmetric rigid body, $\dot{\psi} \cos\theta + \dot{\phi} = \omega_3$ is constant (see Appendix C), and this shall justify the neglect of the derivative of this term in calculating ${}^N\boldsymbol{\alpha}^D$, which appears in expanded form as

$$ {}^N\boldsymbol{\alpha}^D = \frac{{}^Nd}{dt}\, {}^N\boldsymbol{\omega}^D = \frac{{}^Dd}{dt}\, {}^N\boldsymbol{\omega}^D + {}^N\boldsymbol{\omega}^D \times {}^N\boldsymbol{\omega}^D = \frac{{}^Dd}{dt}\, {}^N\boldsymbol{\omega}^D $$

Thus, ignoring also $\dot{\theta}$ and $\ddot{\psi}$, one obtains

$$ {}^N\boldsymbol{\alpha}^D = \dot{\phi}\dot{\psi} \sin\theta (\cos\phi \hat{\mathbf{d}}_1 - \sin\phi \hat{\mathbf{d}}_2) \tag{36} $$

Substitution of (35) and (36) into (34) provides the following, with the assumption that the coordinate x_2 of P is zero:

$$ \begin{aligned} {}^N\mathbf{a}^P = {} & \hat{\mathbf{d}}_1 [-x_1 (\dot{\phi}^2 + \dot{\psi}^2) + x_1 \dot{\psi}^2 \sin^2\theta \sin^2\phi - 2x_1\dot{\phi}\dot{\psi} \cos\theta \\ & + x_3 \dot{\psi}^2 \sin\theta \cos\theta \sin\phi] \\ & + \hat{\mathbf{d}}_2 [x_1 \dot{\psi}^2 \sin^2\theta \sin\phi \cos\phi + x_3 \dot{\psi}^2 \sin\theta \cos\theta \cos\phi] \\ & + \hat{\mathbf{d}}_3 [x_1 \dot{\psi}^2 \sin\theta \cos\theta \sin\phi + 2x_1\dot{\phi}\dot{\psi} \sin\theta \sin\phi - x_3 \dot{\psi}^2 \sin^2\theta] \end{aligned} \tag{37} $$

which checks Eq. (13) of Ref. 20. The authors rewrite this expression, making use of the relationships

$$\dot{\psi} = \frac{I_3}{I_1}\,\omega_0$$

$$\dot{\phi} = \left(1 - \frac{I_3}{I_1}\right)\omega_0 \cos\theta \tag{38}$$

which may be confirmed from Eqs. (C-18) and (C-19) of Appendix C, with the added definition

$$\omega_0 = \omega_3/\cos\theta \tag{39}$$

so that ω_0 is the angular speed the body would have if spinning about the symmetry axis. Their result is the following:

$$\begin{aligned}
{}^N\mathbf{a}^P = {} & \omega_0^2\hat{\mathbf{d}}_1\,[-x_1\cos^2\theta + x_1\,(I_3/I_1)^2(\cos^2\theta + \sin^2\theta\sin^2\phi - 1) \\
& + x_3\,(I_3/I_1)^2\sin\theta\cos\theta\sin\phi] \\
& + \omega_0^2\hat{\mathbf{d}}_2\,[x_1\,(I_3/I_1)^2\sin^2\theta\sin\phi\cos\phi + x_3\,(I_3/I_1)^2\sin\theta\cos\theta\cos\phi] \\
& + \omega_0^2\hat{\mathbf{d}}_3\,[2x_1\,(I_3/I_1)\sin\theta\cos\theta\sin\phi - x_1\,(I_3/I_1)^2\sin\theta\cos\theta\sin\phi \\
& - x_3\,(I_3/I_1)^2\sin^2\theta]
\end{aligned} \tag{40}$$

In either acceleration expression it is evident that the time variation of acceleration occurs with frequencies $\dot{\phi}/2\pi$ and $\dot{\phi}/\pi$, as ϕ is the only term in these expressions with recognized time dependence. In the form of (40) it becomes apparent that for slender cylindrical vehicles, such as *Explorer I*, for which terms in $(I_3/I_1)^2$ may be discarded, the principal time variation in acceleration ${}^N\mathbf{a}_t^P$ may be expressed as

$${}^N\mathbf{a}_t^P = 2\omega_0^2 x_1\,(I_3/I_1)\sin\theta\cos\theta\sin\phi\hat{\mathbf{d}}_3 \tag{41}$$

and in this form there is complete agreement with Eq. (33), which represents the term used by Wells in calculating the "driving force" in Ref. 13.

Thomson and Reiter proceed in Ref. 20 to apply the result (41) to two examples: The first is a pair of rigid disks connected by a flexible massless tube; the second is a rigid cylinder with four beams extending from its centroid at right angles to each other and to the cylinder axis (so it looks like *Explorer I*, with beams replacing the wire antennas).

In the first example, inertial effects due to elastic response are ignored; as in Ref. 13 the conclusion is an exponential increase in θ when it is small.

Calculations for the second example include the inertial effects of flexibility, and hence show the serious consequences of resonance, i.e., coincidence of driving frequency $\dot{\phi}/2\pi$ and a natural frequency of elastic response of the structure. Such resonance effects were pronounced in the case of *Explorer I*, and they were also considered by Wells (Ref. 13), but in all cases the effects of resonance on the Poinsot motion of the spacecraft are assumed negligible.

F. Applications with Annular Dampers

Damping devices consisting of annular cavities containing viscous fluid encircling an axis of symmetry have been studied extensively,[11] both analytically and experimentally, at the Naval Ordnance Test Station (Refs. 22, 23) and at TRW Systems (Refs. 24–26). In this section on the energy sink method it is appropriate to discuss only Ref. 24, as in this paper the authors adopt the assumption that inertial effects on spacecraft motion due to flow of fluid within the damper are negligible (they speak of "quasi-steady motion" of the spacecraft). The equations are linearized in the coning angle θ, so that applicability is restricted to spacecraft containing dampers for the attenuation of small oscillations about stable motions. In Ref. 24, Carrier and Miles treat several domains of behavior within the small θ restriction; the configuration of the fluid (mercury) within the annulus varies qualitatively with θ and determines the analytical model. For the smallest values of θ, an expression for $\dot{T}$ is developed which predicts an exponential decay of θ with time. Expressions for $\dot{T}$ are also developed in Ref. 24 for somewhat larger values of θ (exceeding 0.02 radian for typical parameters, but small enough so that $\theta^2 << \theta$).

This example of an application of the energy sink method is of particular value in the present report (which seeks to evaluate methods of analysis, and not damper designs) because there exists for comparison a later analysis (Ref. 26) by one of the authors of Ref. 24 in which the energy sink approach is abandoned in favor of more rigorous analysis incorporating all inertial effects (but retaining the small θ assumption). Results of these two analyses differ substantially. For the sample problem offered for comparison, an upper bound estimate in Ref. 26 of the time constant[12] for attenuation of the deviation from the nominal spin is, for the nonresonant case, 17 min, and for the resonant case, 37 sec, whereas the comparable figures obtained by the energy sink method are 14 sec and 4×10^{-3} sec.

This comparison is somewhat sobering, and forces the conclusion that experimental investigation is required for annular dampers. References 25 and 17 contain test results and their correlation with Ref. 24.

G. Applications with Pendulum Dampers

Dampers consisting of one or more pendulums attached to fixed pivot points on a rigid satellite and additionally constrained by elastic and viscous restoring torques have been analyzed by Alper (Ref. 28) at TRW–STL and also tested and analysed by a team at the Naval Ordnance Test Station (Refs. 2, 3, and 29 and experiments by Newkirk). Only the first of these papers involves the energy sink method, and discussion here is restricted to that paper.

The problem considered by Alper is that of the effect of a single spherical pendulum, mounted in a viscoelastic support and nominally aligned with the axis of spin, on an asymmetric rigid spacecraft in small angle deviation from nominal spin. The energy sink method is adopted, so that direct effects on spacecraft motion of inertial reactions due to pendulum action are neglected. The

[11]They have also been used on satellites. An annular damper was used on *Explorer XI* to hasten departure from an unstable initial motion (see Ref. 27) and on *Explorer VI* to attenuate oscillations about a stable motion (see [21]).

[12]In the expression $e^{-t/T}$, T is the "time constant."

possibility of instabilities being overlooked in this step have been noted. Beyond this minor approximation, the analysis proceeds with exceptional precision; the full acceleration expression is derived (Cf. Eq. 17 of Ref. 28 and Eq. (20) herein) and all terms are retained. As in the case of Ref. 5, described in detail in Section IV-C, the restriction to small relative motions and small spacecraft deviations from nominal spin eliminates automatically the troublesome terms in the variables with time-varying coefficients. Thus the equations of motion are linear differential equations with constant coefficients and periodic "driving forces," and as such are readily solved. This paper is valuable in the present context because it extends this conclusion to asymmetric bodies.

As in each case previously cited, the nutation angle θ decays exponentially with time.

H. Applications with Mass-Spring-Dashpot Dampers

The SYNCOM damper may be placed in this category, although instead of a mechanical spring the centrifugal force field is utilized, and the mass is a fluid slug (mercury). An energy sink analysis of this damper has been provided in Section IV-C.

A clear example of a mass-spring-dashpot damper is analyzed by Taylor (Ref. 30), using computer studies of exact equations (Method II, Section V). This is relevant in this section on the energy sink method only because of the brief comment by Reiter and Thomson in (Ref. 17), which indicates that an approximate (energy-sink) analysis of this system has been performed at TRW, with results which compare favorably to the exact (computer) solution.

V. THE DISCRETE PARAMETER MODEL

A. The Idealization

Although for very simple structures such as homogeneous rods, disks, or spheres it may be feasible to idealize bodies as continua, complex spacecraft generally require more severe idealizations in modeling for dynamic response. Typically it is necessary to separate the vehicle into numerous discrete parts connected by idealized (massless) constraints. The various parts may in some instances be idealized as continua; this may be a compelling alternative in the idealization of tanks partially filled with fluid, for example. But more typically the separate structural components are themselves broken up into discrete concentrations of inertia, massless elastic springs, and, perhaps, massless dampers, such as viscous dashpots. This idealization is called a discrete parameter model.

The advantages of this model are evident only when considered in the context of an environment in which digital computers are available, because only with the concomitant analytical support can the analyst work with a model with a sufficiently large number of discrete parameters to represent a physical system that is, in fact, necessarily continuous. With this support, however, the analyst can approach the dynamic analysis of structures with great generality; the resulting ordinary differential equations of motion are readily constructed and, if linearized (as for vibration analysis), readily solved without time-consuming direct integration.

As noted previously (see Section III-B), the primary disadvantage in this method is associated with the determination of the properties of the discrete dampers within the system. For many dynamics problems this knowledge is unnecessary, but for the present problem it is obviously crucial. This fact restricts the utility of this method to those systems for which the damper and its properties are easily identified. As a practical matter, this is a restriction to spacecraft with specifically constructed dampers; for the most part, such dampers would be incorporated to attenuate the deviations from nominal spin of a satellite in stable rotation about a principal axis of maximum moment of inertia.

B. The Analysis

Although difficulties of analysis of individual discrete parameter systems should not be minimized, little of value can be offered in general comment (a situation unlike that for the energy sink method preceding or the modal analysis to follow).

In the simplest conceptual terms, one may apply Newton's second law $\mathbf{F} = m^N\mathbf{a}^P$ and its rotational consequence $\mathbf{T} = ({}^N d/dt)\,\mathbf{H}$ (with appropriate restrictions) to each individual concentrated mass or rigid sub-body. The system of resulting equations, coupled due to interactions, may then be solved to complete the analysis. In application, it may prove simpler to apply Lagrange's equations

$$\frac{d}{dt}\left(\frac{\partial L}{\partial \dot{q}_i}\right) - \frac{\partial L}{\partial q_i} + \frac{\partial F}{\partial \dot{q}_i} = 0 \tag{42}$$

where L is the Lagrangian (kinetic minus potential energy) and F the Rayleigh dissipation function for viscous systems. Regardless of the basis, the equations of motion are ordinary differential equations for discrete parameter systems. Equations of motion may preserve full generality, or they may be linearized in a consistent way to simplify analysis.

In the following section a few examples of the application of this method of direct analysis are cited for reference. Analytical details are not of sufficiently broad interest to warrant discussion, except where questionable approximations seem to require special notice. These few examples are noted in order to provide an indication of the type of systems for which this method of analysis is appropriate.

C. Examples

Studies at the Naval Ordnance Test Station of pendulum dampers (see Refs. 2, 3, and 29) involve direct construction of Lagrange's equations and solution of equations linearized in the relative rotation variables and in the angular velocity components normal to the system spin axis, so that the nutation angle θ must remain small. The system studied is in each case a rigid symmetric body to which are attached from one to four simple pendulums rotating in a plane normal to the symmetry axis under viscous constraints (see Fig. 6).

The linearized equations of motion have constant coefficients, so their solutions can be obtained explicitly. This requires the extraction of roots of characteristic equations, and for the problem considered this means the solution of a tenth-degree algebraic equation, which

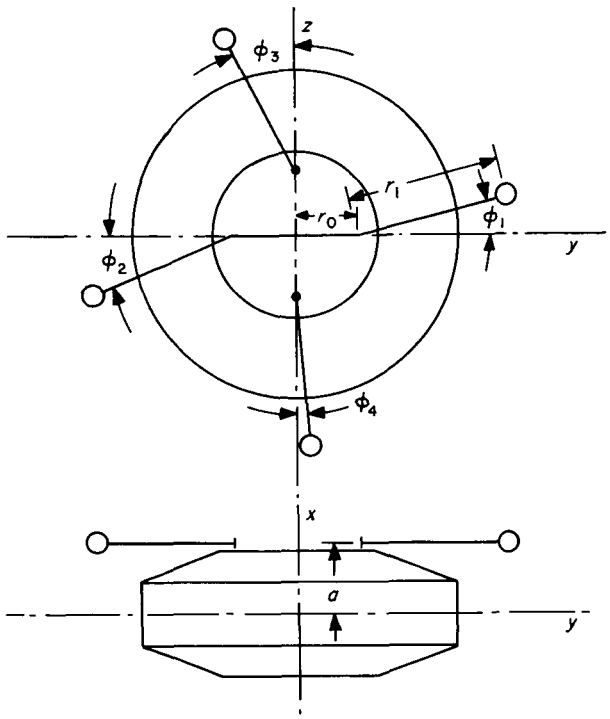

Fig. 6. Pendulum dampers (Ref. 29)

is reduced by factorization to quartic, cubic, and quadratic parts, the solutions of which are available directly.

A second example of direct construction of equations of motion for an idealized discrete parameter system is available in Ref. 31, in which a pair of mass-tipped cables serves to activate internal energy dissipation devices (see Fig. 7). In the indicated reference, D'Alembert's principle is applied to the three bodies individually, under certain restrictive assumptions (e.g., symmetrical motion of the end-masses), and the resulting nonlinear equations are presented for digital or analog computer solution.

As a third and final example, the analysis in Ref. 32 of the spring-mass-dashpot damper illustrated in Fig. 8 is indicated. In this work, the analysts find it convenient to obtain the equations of rotation of the main body from Euler's dynamical equations, using the damper mass motion as torque source, and then to employ Lagrange's equation to obtain an equation of motion for the damper mass. For reasons unexplained, the analysts ignore the torques due to Coriolis forces transmitted to the walls of the damper mass housing, and (less seriously) the fact that the main body mass center is not stationary but moves in response to the damper mass motion in order to keep the composite mass center fixed. Although in

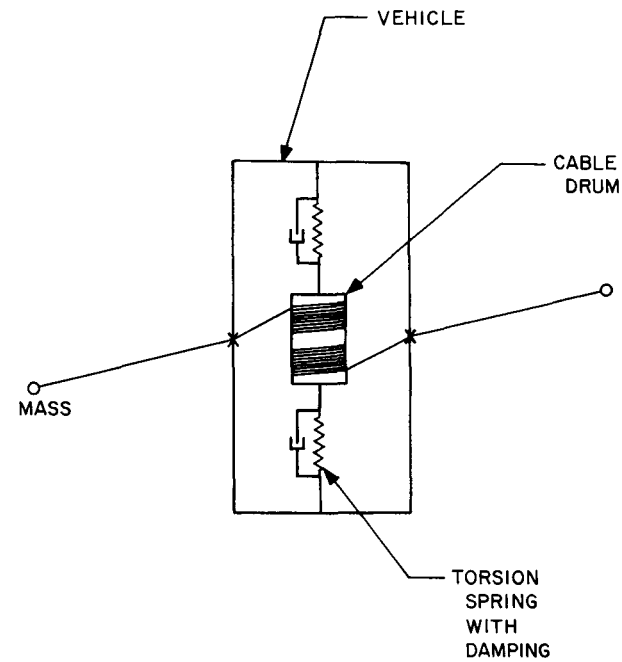

Fig. 7. Cable dampers (Ref. 31)

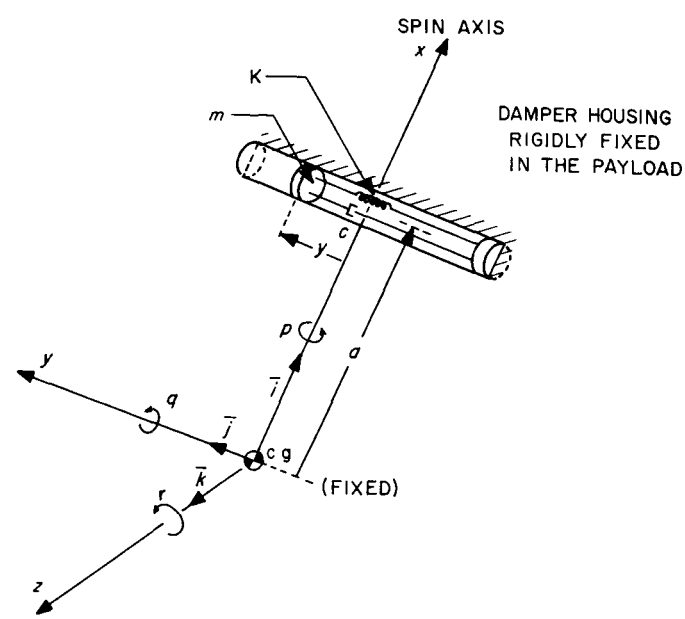

Fig. 8. Spring-mass-dashpot damper (Ref. 32)

this paper there are compromises in rigor, these aberrations are not inherent in the method, which can be as exact as the idealized discrete parameter model allows.

VI. THE MODAL MODEL

A. The Idealization

Since the variables in a modal response analysis are the magnitudes of the contributions of the various modes of a system to its motion and deformation, there is no inherent restriction to a particular detailed mathematical model, either discrete or continuous. Thus the model is labeled "modal." But as a practical matter the modes of deformation of a structure are usually determined analytically (and later checked experimentally), so that a modal analysis requires first a detailed mathematical idealization of the system. For the reasons offered in the previous section, a discrete parameter model is the basis for the following analysis. (This approach is in conformity with current JPL practice in vibration analysis; certain phases of the following work are in fact common to the analysis of vibrations and rotational dynamics, so that computer programs and analytical efforts can be utilized jointly.)

The difficulties in specifying in a discrete parameter model the energy dissipation characteristics of a complex structure have been noted. It has further been observed that the natural frequencies and mode shapes of a typical (lightly damped) structure are essentially independent of its damping properties. Thus one can reasonably ignore damping in constructing a model to be used for modal analysis (i.e., for the determination of natural frequencies and mode shapes).

In the procedure to be followed here, there is no attempt to introduce discrete dampers; equations of forced motion will be written for undamped discrete parameter systems. Then a transformation to modal coordinates is made, and finally damping constants ζ_i are introduced for each mode—to put the equations of motion into a nonlinear form analogous to the vibration equations (3).

To this end, consider a flexible body consisting of a three-dimensional array of n rigid bodies interconnected by massless elastic rods. This body is designated B, and the n rigid bodies are A_i, $i = 1, 2, \cdots n$. The symbol $\tilde{B}$ represents an imaginary, massless *rigid* body that is identical with B when B is undeformed (unstressed); unit vectors $\hat{\mathbf{b}}_1$, $\hat{\mathbf{b}}_2$, and $\hat{\mathbf{b}}_3$ are fixed relative to $\tilde{B}$ and parallel to the centroidal principal axes of $\tilde{B}$, which by definition are coincident with those of B; the mass centers of B and $\tilde{B}$ are also identical by definition.

As a further restriction on B, it is assumed that, when B is undeformed, the principal axes of A_i, $i = 1, \cdots, n$, are parallel to principal axes of undeformed B. (This assumption is also current practice for JPL computer program STIFFEIG for modal analysis in vibration studies.)

Figure 9 illustrates a typical body B, shown in an undeformed state (so that this is a sketch of $\tilde{B}$ as well as B). In this figure, P designates the mass center of B (and of $\tilde{B}$); P_i designates the mass center of rigid body A_i, $i = 1, \cdots, 4$; Q_i, $i = 1, \cdots 4$, designates the point of body $\tilde{B}$ corresponding to P_i when B is undeformed, and N and N_i, $i = 1, \cdots 4$, designate points fixed in a Newtonian reference frame and coincident with P and P_i, respectively. Unit vectors $\hat{\mathbf{n}}_1$, $\hat{\mathbf{n}}_2$, and $\hat{\mathbf{n}}_3$ are orthogonal and fixed in a Newtonian frame; in Fig. 9 they are parallel to $\hat{\mathbf{b}}_1$, $\hat{\mathbf{b}}_2$, and $\hat{\mathbf{b}}_3$, respectively.

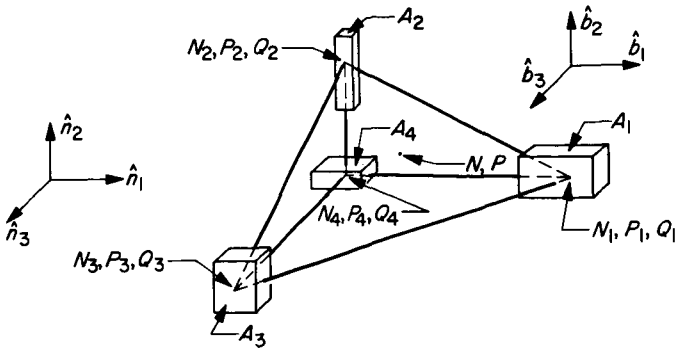

Fig. 9. Undeformed idealized system

Figure 10 shows the system of Fig. 9 in a deformed and displaced state. The dotted lines in this figure describe the unchanged geometry of rigid body $\tilde{B}$ in some new position and orientation; the full lines describe the deformed body B in some new position and orientation; all points labeled N and all unit vectors labeled $\hat{\mathbf{n}}$ are the same as in Fig. 9 (since they are all fixed in inertial space).

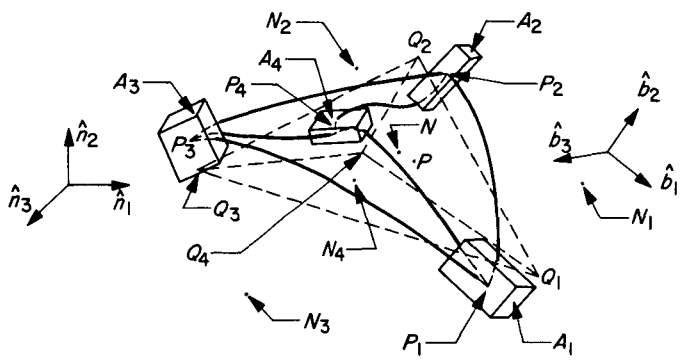

Fig. 10. Deformed idealized system

Define n sets of unit vectors $\hat{\mathbf{a}}^i_1$, $\hat{\mathbf{a}}^i_2$, and $\hat{\mathbf{a}}^i_3$, fixed relative to body A_i and parallel to the centroidal principal axes of A_i, $i = 1, \cdots n$.

Define position vectors relating points N, P, P_i, and Q_i, $i = 1, \cdots n$, as follows: $\mathbf{p}_i = \mathbf{PP}_i$; $\mathbf{q}_i = \mathbf{PQ}_i$; $\mathbf{x}_i = \mathbf{Q}_i\mathbf{P}_i$; $\mathbf{X} = \mathbf{NP}$.

Define for each body A_i a set of attitude angles θ_{i1}, θ_{i2}, θ_{i3} as indicated in Fig. 11. The angles θ_{i1}, θ_{i2}, θ_{i3} are obtained by rotating the $\hat{\mathbf{a}}^i_r$ triad from an orientation coincident with the $\hat{\mathbf{b}}_r$ triad, first about the $\hat{\mathbf{b}}_1$ axis, then about the displaced (dotted) 2 axis, and finally about the $\hat{\mathbf{a}}_3$ axis.

One additional set of angles θ_1, θ_2, θ_3 can be defined as in Fig. 11 to establish the relative orientation of the triads $\hat{\mathbf{b}}_r$ and $\hat{\mathbf{n}}_r$, $r = 1, 2, 3$. Six n coordinates are required to define the motion of B, and six n equations of motion, obtained, for example, by applying D'Alembert's principle to each of the bodies $A_1, \cdots, A_n$, are sufficient to determine these coordinates. The hypothetical rigid body $\tilde{B}$ is introduced in order to make it possible to work with the quantities $\mathbf{x}_i$ and θ_{ir},

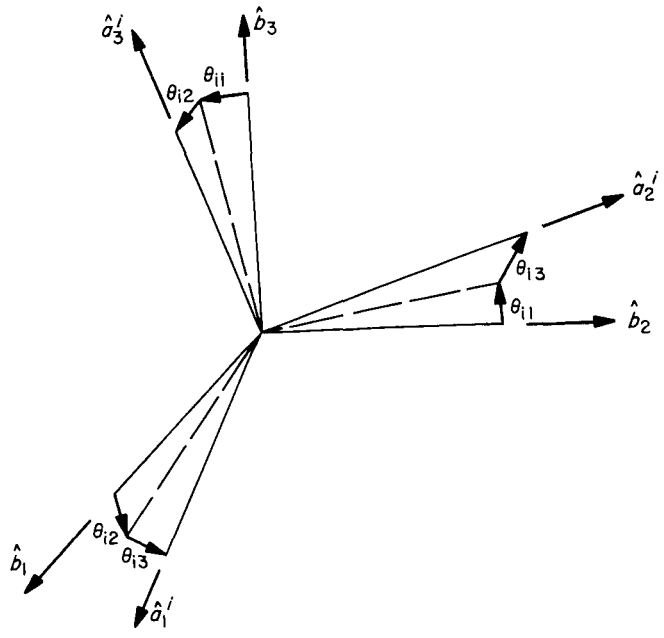

Fig. 11. Coordinate system

which can be assumed to remain small. The approximate equations of motion obtained by neglecting terms in $|\mathbf{x}_i|$ and θ_{ir} above the first degree are considerably simpler than those resulting from a more direct description of the motion of B. However, coordinates describing the motion of $\tilde{B}$ thus come into play, and the increase in the number of coordinates leads to a corresponding increase in the number of equations. The additional six equations are obtained from the definition of $\tilde{B}$. The required coincidence of the mass centers of B and $\tilde{B}$ may be expressed

$$\sum_{i=1}^{n} m_i \mathbf{p}_i = 0 \tag{43}$$

and the indicated correspondence of principal axes of B and $\tilde{B}$ becomes

$$\sum_{i=1}^{n} m_i p_{ir} p_{is} = 0 \tag{44}$$

for $r = 1$, $s = 2$ and its cyclic permutations for r, $s = 1, 2, 3$.

The equations of motion for the total body B can also be written, and this set of six may be used instead of a set of six for an individual sub-body A_i, or as a set of equations for checking results, but they are not independent of the total set of $6n$ equations of motion and cannot provide new dynamical information.

B. General Equations of Motion

In terms of a "stiffness matrix" $[\dot{k}]$ and an "inertia matrix" $[m]$ of a flexible elastic body, the equations of small vibration about a configuration of static

equilibrium may be written

$$[k]\{u\} + [m]\{\ddot{u}\} = 0 \tag{45}$$

where the vector (or column matrix) designated $\{u\}$ contains, in ordered sequence, all those (small) variables x_{ir} and θ_{ir} which have been defined here. (The variable x_{ir} is the $\hat{\mathbf{b}}_r$ measure number of x_i.) More specifically,

$$\{u\} = [x_{11}, x_{12}, x_{13}, \theta_{11}, \theta_{12}, \theta_{13}, x_{21}, x_{22}, x_{23}, \cdots, \theta_{n3}]^T \tag{46}$$

where the superscript T indicates transposition to a column matrix.

It must be emphasized that Eq. (45) is restricted to a system vibrating about a *static* equilibrium configuration; i.e., $\tilde{B}$ would have to be fixed in inertial space for the validity of (45). Consequently, it does not apply to the more general problem under study here. Nonetheless, the well-developed concept of the stiffness matrix remains convenient.

The elements of the stiffness matrix will be designated k_{iqjr} and defined as the $\hat{\mathbf{b}}_q$ measure numbers of the action (equilibrating force or torque) at point P_i due to a unit displacement of body A_j in "direction" r, with the following conventions:

1. $r = 1, 2, 3$ correspond to linear displacements in directions $\hat{\mathbf{b}}_1$, $\hat{\mathbf{b}}_2$, and $\hat{\mathbf{b}}_3$, respectively.
2. $r = 4, 5, 6$ correspond to angular displacements which involve the positive rotation of body A_j about axes parallel to $\hat{\mathbf{b}}_1$, $\hat{\mathbf{b}}_2$, and $\hat{\mathbf{b}}_3$.

Although the equations of motion will ultimately be expressed in matrix form, derivation of these equations in the body of this report proceeds from a vector formulation of the D'Alembert equations for each of the bodies A_i. A direct matrix derivation appears as Appendix E.

For each of the n bodies A_i, two vector equations of motion apply:

$$\mathbf{F}_{A_i} + \mathbf{F}'_{A_i} = 0 \tag{47}$$

$$\mathbf{T}_{A_i} + \mathbf{T}'_{A_i} = 0 \tag{48}$$

where $\mathbf{F}_{A_i}$ is the sum of gravitational and contact forces on A_i, $\mathbf{F}'_{A_i}$ is the inertia force for A_i, $\mathbf{T}_{A_i}$ is the sum of the moments about P_i of the gravitational and contact forces acting on A_i, and $\mathbf{T}'_{A_i}$ is the inertia torque for A_i.

In writing (47) and (48) as scalar equations it is convenient to equate the $\hat{\mathbf{b}}_r$ measure numbers ($r = 1, 2, 3$) of $\mathbf{F}_{A_i}$ and $-\mathbf{F}'_{A_i}$, and of $\mathbf{T}_{A_i}$ and $-\mathbf{T}'_{A_i}$. Define these measure numbers as below:

$$\begin{aligned}
\mathbf{F}_{A_i} &= F_{i1}\hat{\mathbf{b}}_1 + F_{i2}\hat{\mathbf{b}}_2 + F_{i3}\hat{\mathbf{b}}_3 \\
\mathbf{F}'_{A_i} &= F'_{i1}\hat{\mathbf{b}}_1 + F'_{i2}\hat{\mathbf{b}}_2 + F'_{i3}\hat{\mathbf{b}}_3 \\
\mathbf{T}_{A_i} &= T_{i1}\hat{\mathbf{b}}_1 + T_{i2}\hat{\mathbf{b}}_2 + T_{i3}\hat{\mathbf{b}}_3 \\
\mathbf{T}'_{A_i} &= T'_{i1}\hat{\mathbf{b}}_1 + T'_{i2}\hat{\mathbf{b}}_2 + T'_{i3}\hat{\mathbf{b}}_3
\end{aligned} \tag{49}$$

The symbol $\mathbf{F}_{A_i}$, which represents the sum of the contact and gravitational forces applied to A_i, will contain terms arising from the elastic forces (internal to B) and terms describing the gravitational and contact forces external to B. This latter group will be designated $\mathbf{G}_i$, with $\hat{\mathbf{b}}_r$ measure numbers G_{i1}, G_{i2}, and G_{i3}. These terms disappear for free body motion.

The "internal" elastic forces can be described by utilizing the elements of the stiffness matrix. Therefore,

$$F_{iq} = -\sum_{j=1}^{n}\sum_{r=1}^{6} k_{iqjr}u_{jr} + G_{iq} \tag{50}$$

where $q = 1, 2, 3$ and $i = 1, \cdots, n$.

Similar equations describe the measure numbers of $\mathbf{T}_{A_i}$, the contact and gravitational torque. For generality of the equations of motion, external torques will be retained and designated $\mathbf{L}_i$ with $\hat{b}_r$ measure numbers L_{i1}, L_{i2}, L_{i3}, although they are extraneous to the primary problem of free rotation.

The "internal" elastic torques are described as before by extracting a double summation from the appropriate row of the matrix equation; i.e.,

$$T_{iq} = -\sum_{j=1}^{n}\sum_{r=1}^{6} k_{iqjr}u_{jr} + L_{i(q-3)} \tag{51}$$

where $q = 4, 5, 6$, and $i = 1, \cdots, n$.

The inertia forces $\mathbf{F}'_{A_i}$ are given by

$$\mathbf{F}'_{A_i} = -m_i\mathbf{a}^{P_i} \tag{52}$$

where m_i is the mass of A_i and $\mathbf{a}^{P_i}$ is the acceleration of P_i in a Newtonian (inertial) reference frame. This acceleration can be written (see Section IV-B)

$$\mathbf{a}^{P_i} = {}^{\tilde{B}}\mathbf{a}^{P_i} + 2\boldsymbol{\omega}^{\tilde{B}} \times {}^{B}\mathbf{V}^{P_i} + \mathbf{a}^{P} + \boldsymbol{\alpha}^{\tilde{B}} \times \mathbf{p}_i + \boldsymbol{\omega}^{\tilde{B}} \times (\boldsymbol{\omega}^{\tilde{B}} \times \mathbf{p}_i) \tag{53}$$

where the left-hand superscript denotes the reference frame when non-inertial, $\mathbf{a}$ means linear acceleration, $\boldsymbol{\omega}$ means angular velocity, $\mathbf{V}$ means linear velocity, and $\boldsymbol{\alpha}^B$ is the inertial angular acceleration of B. (Recall that P is the mass center of B, so $\mathbf{a}^P$ is the acceleration of P in an inertial reference frame.)

From the definition of $\{u\}$ (Eq. 46),

$${}^{\tilde{B}}\mathbf{a}^{P_i} = \ddot{u}_{i1}\hat{\mathbf{b}}_1 + \ddot{u}_{i2}\hat{\mathbf{b}}_2 + \ddot{u}_{i3}\hat{\mathbf{b}}_3 \tag{54}$$

and

$${}^{\tilde{B}}V^{P_i} = \dot{u}_{i1}\hat{\mathbf{b}}_1 + \dot{u}_{i2}\hat{\mathbf{b}}_2 + \dot{u}_{i3}\hat{\mathbf{b}}_3 \tag{55}$$

Substituting (54), (55) into (53), and using (52), gives

$$\begin{aligned}\mathbf{F}'_{A_i} = -m_i\,[&\ddot{u}_{i1}\hat{\mathbf{b}}_1 + \ddot{u}_{i2}\hat{\mathbf{b}}_2 + \ddot{u}_{i3}\hat{\mathbf{b}}_3 + \mathbf{a}^P + \boldsymbol{\alpha}^{\tilde{B}} \times \mathbf{p}_i + \boldsymbol{\omega}^{\tilde{B}} \times (\boldsymbol{\omega}^{\tilde{B}} \times \mathbf{p}_i)\\ &+ 2\boldsymbol{\omega}^{\tilde{B}} \times (\dot{u}_{i1}\hat{\mathbf{b}}_1 + \dot{u}_{i2}\hat{\mathbf{b}}_2 + \dot{u}_{i3}\hat{\mathbf{b}}_3)]\end{aligned} \tag{56}$$

Vector equation (56) describes the inertia force on A_i. The three scalar equations (50) describe the vector force $\mathbf{F}_{A_i}$ applied to A_i. Therefore (50) and (56) provide n vector equations of motion (one for each of the n bodies A_i) of the type

$$\mathbf{F}_{A_i} + \mathbf{F}'_{A_i} = 0 \tag{57}$$

The task of formulating the inertia torque of body A_i remains. The $\hat{\mathbf{b}}_r$ measure numbers of T'_{A_i} have been defined (Eq. 49). Similarly the $\hat{\mathbf{a}}^i_r$ measure numbers can be defined, where $\mathbf{a}^i_r$, $r = 1, 2, 3$ is a unit vector fixed in A_i and parallel to a principal axis, as previously defined

$$\mathbf{T}_{A_i} = T_{A_i1}\hat{\mathbf{a}}^i_1 + T_{A_i2}\hat{\mathbf{a}}^i_2 + T_{A_i3}\hat{\mathbf{a}}^i_3 \tag{58}$$

These measure numbers are the applied torques in Euler's dynamical equations

$$T'_{A_i1} = -\left[I^i_1 \dot{\omega}^{A_i}_{A_i1} - (I^i_2 - I^i_3)\, \omega^{A_i}_{A_i2}\, \omega^{A_i}_{A_i3}\right] \tag{59}$$

and by cyclic permutation $\mathbf{T}'_{A_i2}$ and T'_{A_i3} are similarly established. In (59), I^i_1, I^i_2, I^i_3 are the principal moments of inertia of A_i, $\omega^{A_i}_{A_i2}$ is the $\hat{\mathbf{a}}^i_2$ measure number of $\boldsymbol{\omega}^{A_i}$, etc.

From these $\hat{\mathbf{a}}^i_r$ measure numbers of T'_{A_i}, the $\hat{\mathbf{b}}_r$ measure numbers are readily available. By dot-multiplying (58) with the appropriate unit vector, one obtains

$$T'_{i1} = \mathbf{T}'_{A_i} \cdot \hat{\mathbf{b}}_1 = T'_{A_i1}(\hat{\mathbf{a}}^i_1 \cdot \hat{\mathbf{b}}_1) + T_{A_i2}(\hat{\mathbf{a}}^i_2 \cdot \hat{\mathbf{b}}_1) + T_{A_i3}(\hat{\mathbf{a}}^i_3 \cdot \hat{\mathbf{b}}_1) \tag{60}$$

Reference to Fig. 11, where the angles θ_{ir} are defined, provides results for the dot-products in (60). Because it has been assumed that these angles (which represent deformation of B) remain small, the dot-products in (60) will be evaluated neglecting any terms in θ_{ir} above the first degree. To this approximation, these products are

$$\begin{aligned}
&\hat{\mathbf{a}}^i_1 \cdot \hat{\mathbf{b}}_1 = 1 && \hat{\mathbf{a}}^i_2 \cdot \hat{\mathbf{b}}_1 = -\theta_{i3} && \hat{\mathbf{a}}^i_3 \cdot \hat{\mathbf{b}}_1 = \theta_{i2} \\
&\hat{\mathbf{a}}^i_1 \cdot \hat{\mathbf{b}}_2 = \theta_{i3} && \hat{\mathbf{a}}^i_2 \cdot \hat{\mathbf{b}}_2 = 1 && \hat{\mathbf{a}}^i_3 \cdot \hat{\mathbf{b}}_2 = -\theta_{i1} \\
&\hat{\mathbf{a}}^i_1 \cdot \hat{\mathbf{b}}_3 = -\theta_{i2} && \hat{\mathbf{a}}^i_2 \cdot \hat{\mathbf{b}}_3 = \theta_{i1} && \hat{\mathbf{a}}^i_3 \cdot \hat{\mathbf{b}}_3 = 1
\end{aligned} \tag{61}$$

so that

$$T'_{i1} = T'_{A_i1} - \theta_{i3}T'_{A_i2} + \theta_{i2}T'_{A_i3} \tag{62}$$

and similarly for T'_{i2} and T'_{i3}.

Note that $\boldsymbol{\omega}^{A_i}$ may be written

$$\boldsymbol{\omega}^{A_i} = {}^{\tilde{B}}\boldsymbol{\omega}^{A_i} + \boldsymbol{\omega}^{\tilde{B}} = \dot{\theta}_{i1}\hat{\mathbf{a}}^i_1 + \dot{\theta}_{i2}\hat{\mathbf{a}}^i_2 + \dot{\theta}_{i3}\hat{\mathbf{a}}^i_3 + \omega_{A_i1}\hat{\mathbf{a}}^i_1 + \omega_{A_i2}\hat{\mathbf{a}}^i_2 + \omega_{A_i3}\hat{\mathbf{a}}^i_3 \tag{63}$$

or

$$\boldsymbol{\omega}^{A_i} = {}^{\tilde{B}}\boldsymbol{\omega}^{A_i} + \boldsymbol{\omega}^{\tilde{B}} = \dot{\theta}_{i1}\hat{\mathbf{b}}_1 + \dot{\theta}_{i2}\hat{\mathbf{b}}_2 + \dot{\theta}_{i3}\hat{\mathbf{b}}_3 + \omega_1\hat{\mathbf{b}}_1 + \omega_2\hat{\mathbf{b}}_2 + \omega_3\hat{\mathbf{b}}_3 \tag{64}$$

where the symbols ω without superscripts designate the measure numbers of ${}_{\omega}\widetilde{B}$, the angular velocity of $\widetilde{B}$ in a Newtonian reference. From (63) it follows that

$$\begin{aligned} \omega_{A_i 1}^{A_i} &= \dot{\theta}_{i1} + \omega_{A_i 1} \\ \omega_{A_i 2}^{A_i} &= \dot{\theta}_{i2} + \omega_{A_i 2} \\ \omega_{A_i 3}^{A_i} &= \dot{\theta}_{i3} + \omega_{A_i 3} \end{aligned} \tag{65}$$

and by dot-multiplying the appropriate terms in (64) and using (61), one obtains:

$$\begin{aligned} \omega_{A_i 1} &= \omega_1 + \theta_{i3}\omega_2 - \theta_{i2}\omega_3 \\ \omega_{A_i 2} &= \omega_2 - \theta_{i3}\omega_1 + \theta_{i1}\omega_3 \\ \omega_{A_i 3} &= \omega_3 + \theta_{i2}\omega_1 - \theta_{i1}\omega_2 \end{aligned} \tag{66}$$

Consequently, from (59), (65), (66), and differentiation,

$$\begin{aligned} T'_{A_i 1} = &- \{I_1^i(\dot{\omega}_1 + \dot{\theta}_{i3}\omega_2 + \theta_{i3}\dot{\omega}_2 - \dot{\theta}_{i2}\omega_3 - \theta_{i2}\dot{\omega}_3 + \ddot{\theta}_{i1}) \\ &- (I_2^i - I_3^i)[\omega_2\omega_3 + \theta_{i1}(\omega_3^2 - \omega_2^2) + \theta_{i2}\omega_1\omega_2 - \theta_{i3}\omega_1\omega_3 + \dot{\theta}_{i2}\omega_3 + \dot{\theta}_{i3}\omega_2]\} \end{aligned} \tag{67}$$

Finally, in (62), dropping higher degree terms in θ_{ir} yields

$$T'_{i1} = T'_{A_i 1} - [-I_2^i\theta_{i3}\dot{\omega}_2 + (I_3^i - I_1^i)\theta_{i3}\omega_3\omega_1 + I_3^i\theta_{i2}\dot{\omega}_3 + (I_2^i - I_1^i)\theta_{i2}\omega_1\omega_2] \tag{68}$$

Similar equations can be constructed for T'_{i2} and T'_{i3}.

It may be worth noting parenthetically that if $\mathbf{L}_i = 0$ (so no gravity or external contact torque is applied to A_i), then, from (51), the contact torque $\mathbf{T}_{A_i}$ is proportional to u_{jr} ($j = 1, \cdots, n$; $r = 1, \cdots, 6$) and, from (48), the inertia torque $\mathbf{T}'_{A_i}$ must be of the order of first-degree terms in u_{jr}. Consequently, the last two terms in (62) are second-degree terms in small quantities, and should be discarded. Equation (68) then becomes

$$T'_{i1} = T'_{A_i 1} \tag{69}$$

Despite appearances (69) is not substantially easier to work with than (68), and so the more general expression (68) will be retained.

Equations (68), describing the $\hat{\mathbf{b}}_r$ measure numbers of the inertia torques applied to A_i, combine with equations (51), describing the contact and gravitational torque, to produce $3n$ equations of motion of the type

$$\begin{aligned} T_{i1} + T'_{i1} &= 0 \\ T_{i2} + T'_{i2} &= 0 \\ T_{i3} + T'_{i3} &= 0 \end{aligned} \tag{70}$$

Equations (70) and (57), with their supporting equations, provide the necessary $6n$ equations of motion, which combine with the six equations of definition (43) and (44) to form a complete set. As noted, equations of motion for total body B can also be constructed, and, while not independent of the indicated complete set, they may be useful and are recorded here.

The motion of the mass center of B can be determined directly from D'Alembert's principle, which provides

$$\mathbf{F} - M\mathbf{a}^P = 0 \tag{71}$$

where M is the total mass of B, $\mathbf{a}^P$ is the (Newtonian) acceleration of P, and $\mathbf{F}$ is the resultant of all forces applied to B. That is,

$$\mathbf{F} = \sum_{i=1}^{n} \mathbf{G}_i \tag{72}$$

Define the $\mathbf{n}_r$ measure numbers of $\mathbf{X}$, the vector position of mass center P relative to inertial fixed point N, by

$$\mathbf{X} = X_1\hat{\mathbf{n}}_1 + X_2\hat{\mathbf{n}}_2 + X_3\hat{\mathbf{n}}_3 \tag{73}$$

Then the inertial acceleration may be written

$$\mathbf{a}^P = \ddot{X}_1\hat{\mathbf{n}}_1 + \ddot{X}_2\hat{\mathbf{n}}_2 + \ddot{X}_3\hat{\mathbf{n}}_3 \tag{74}$$

and (71) becomes

$$\sum_{i=1}^{n} \mathbf{G}_i - \left(\sum_{i=1}^{n} m_i\right)(\ddot{X}_1\hat{\mathbf{n}}_1 + \ddot{X}_2\hat{\mathbf{n}}_2 + \ddot{X}_3\hat{\mathbf{n}}_3) = 0 \tag{75}$$

D'Alembert's principle also provides the moment equation

$$\mathbf{T} + \mathbf{T}' = 0 \tag{76}$$

In terms of previously defined quantities, these terms appear as

$$\mathbf{T} = \sum_{i=1}^{n} (\mathbf{L}_{A_i} + \mathbf{p}_i \times \mathbf{G}_{A_i}) \tag{77}$$

$$\mathbf{T}' = \sum_{i=1}^{n} (\mathbf{T}'_{A_i} - \mathbf{p}_i \times m_i\mathbf{a}^{P_i}) \tag{78}$$

Substitution into the basic equations (70), (57), (75), and (76) provides the following set of equations: For $i = 1, \cdots, n$,

$$\sum_{q=1}^{3}\left[\left(-\sum_{j=1}^{n}\sum_{r=1}^{6} k_{iqjr}u_{jr} + G_{iq}\right)\hat{\mathbf{b}}_q\right] - m_i\left[\ddot{u}_{i1}\hat{\mathbf{b}}_1 + \ddot{u}_{i2}\hat{\mathbf{b}}_2 + \ddot{u}_{i3}\hat{\mathbf{b}}_3 + \ddot{X}_1\hat{\mathbf{n}}_1 + \ddot{X}_2\hat{\mathbf{n}}_2\right.$$

$$\left. + \ddot{X}_3\hat{\mathbf{n}}_3 + \left(\frac{d}{dt}\boldsymbol{\omega}\right) \times \mathbf{p}_i + \boldsymbol{\omega} \times (\boldsymbol{\omega} \times \mathbf{p}_i) + 2\boldsymbol{\omega} \times (\dot{u}_{i1}\hat{\mathbf{b}}_1 + \dot{u}_{i2}\hat{\mathbf{b}}_2 + \dot{u}_{i3}\hat{\mathbf{b}}_3)\right] = 0 \tag{79}$$

$$
\begin{aligned}
&\sum_{q=4}^{6}\left[\left(-\sum_{j=1}^{n}\sum_{r=1}^{6} k_{iqjr}u_{jr} + L_{i(q-3)}\right)\hat{\mathbf{b}}_{(q-3)}\right] \\
&+ \{ - [I_1^i(\dot{\omega}_1 + \ddot{u}_{i4} + \dot{u}_{i6}\omega_2 + u_{i6}\dot{\omega}_2 - \dot{u}_{i5}\omega_3 - u_{i5}\dot{\omega}_3 - u_{i6}\omega_1\omega_3 - u_{i5}\omega_1\omega_2) \\
&+ I_2^i(-\omega_2\omega_3 + u_{i4}\omega_2^2 - u_{i4}\omega_3^2 + u_{i6}\omega_1\omega_3 - \dot{u}_{i5}\omega_3 - \dot{u}_{i6}\omega_2 - \dot{u}_{i6}\omega_2) \\
&+ I_3^i(\omega_2\omega_3 - u_{i4}\omega_2^2 + u_{i4}\omega_3^2 + u_{i5}\omega_1\omega_2 + \dot{u}_{i5}\omega_3 + \dot{u}_{i6}\omega_2 + \dot{u}_{i5}\omega_3)]\,\hat{\mathbf{b}}_1 \\
&- [I_2^i(\dot{\omega}_2 + \ddot{u}_{i5} + \dot{u}_{i4}\omega_3 + u_{i4}\dot{\omega}_3 - \dot{u}_{i6}\omega_1 - u_{i6}\dot{\omega}_1 - u_{i4}\omega_2\omega_1 - u_{i6}\omega_2\omega_3) \\
&+ I_3^i(-\omega_3\omega_1 + u_{i5}\omega_2^2 - u_{i5}\omega_3^2 + u_{i4}\omega_2\omega_1 - \dot{u}_{i6}\omega_1 - u_{i6}\omega_1 - \dot{u}_{i4}\omega_3 - u_{i4}\dot{\omega}_3) \\
&+ I_1^i(\omega_3\omega_1 - u_{i5}\omega_3^2 + u_{i5}\omega_1^2 + u_{i6}\omega_2\omega_3 + \dot{u}_{i5}\omega_1 + \dot{u}_{i4}\omega_3 + u_{i6}\dot{\omega}_1)]\,\hat{\mathbf{b}}_2 \\
&- [I_3^i(\dot{\omega}_3 + \ddot{u}_{i6} + \dot{u}_{i5}\omega_1 + u_{i5}\dot{\omega}_1 - \dot{u}_{i4}\omega_2 - u_{i4}\dot{\omega}_2 - u_{i5}\omega_3\omega_2 - u_{i4}\omega_3\omega_1) \\
&+ I_1^i(-\omega_1\omega_2 + u_{i6}\omega_3^2 - u_{i6}\omega_1^2 + u_{i5}\omega_3\omega_2 - \dot{u}_{i4}\omega_2 - \dot{u}_{i5}\omega_1 - u_{i5}\dot{\omega}_1) \\
&+ I_2^i(\omega_1\omega_2 - u_{i6}\omega_1^2 + u_{i6}\omega_2^2 + u_{i4}\omega_3\omega_1 + \dot{u}_{i6}\omega_2 + \dot{u}_{i5}\omega_1 + u_{i4}\dot{\omega}_2)]\,\hat{\mathbf{b}}_3\} = 0
\end{aligned}
\tag{80}
$$

$$
\sum_{i=1}^{n} \mathbf{G}_i - \left(\sum_{i=1}^{n} m_i\right)[\ddot{X}_1\hat{\mathbf{n}}_1 + \ddot{X}_2\hat{\mathbf{n}}_2 + \ddot{X}_3\hat{\mathbf{n}}_3] = 0 \tag{81}
$$

$$
\sum_{i=1}^{n} (\mathbf{L}_i + \mathbf{p}_i \times \mathbf{G}_i) + \sum_{i=1}^{n} (\mathbf{T}'_{A_i} - m_i\mathbf{p}_i \times \mathbf{a}^{P_i}) = 0 \tag{82}
$$

It should be emphasized that this is a redundant set of equations, as there are $6n + 6$ equations of motion here and, in addition, the $6n$ defining Eqs. (43) and (44), whereas the unknown variables number $6n + 6$, namely $= X_1, X_2, X_3, \omega_1, \omega_2, \omega_3$, and for $i = 1, \cdots, n$, $x_{i1}, x_{i2}, x_{i3}, \theta_{i1}, \theta_{i2}, \theta_{i3}$. Equations (81) and (82) for the total body B may be considered redundant and omitted, or a more convenient selection of six redundant equations may be made.

If the equations are to be useful, they must be written as scalar equations. Each vector equation provides three scalar equations when the measure numbers of a zero vector are each equated to zero. The $\hat{\mathbf{b}}_r$ measure numbers are most conveniently determined from the given vector equations, and they will be used here.

Equation (79) contains unit vectors $\hat{\mathbf{n}}_1$, $\hat{\mathbf{n}}_2$, and $\hat{\mathbf{n}}_3$, which must be expressed in terms of $\hat{\mathbf{b}}_r$, $r = 1, 2, 3$. The relationships between the $\hat{\mathbf{n}}_r$ and $\hat{\mathbf{b}}_r$ triads have been defined in terms of the angles θ_1, θ_2, and θ_3 (see Section IV-A),[13] so writing (79) as three scalar equations introduces unknowns not previously appearing in the set (79)–(82). In order that a consistent set of equations be retained, the variables $\omega_1, \omega_2, \omega_3$ must be expressed in terms of $\theta_1, \theta_2, \theta_3$ and their derivatives. This can be done explicitly, simply from considerations of kinematics. After the substitution of ω_r, $r = 1, 2, 3$ in to (79) and (80), for example, and the expression of $\hat{\mathbf{n}}_r$, $r = 1, 2, 3$ in terms of $\hat{b}_r$, $r = 1, 2, 3$, routine vector multiplication allows the rapid reformulation of the vector equations (79) and (80) as $6n$ scalar equations in the following $6n + 6$ unknowns: $X_1, X_2, X_3, \theta_1, \theta_2, \theta_3$, and for $i = 1, \cdots, n$, $x_{i1}, x_{i2}, x_{i3}, \theta_{i1}, \theta_{i2}$, and θ_{i3}. These equations still require the equations of definition (43) and (44) for completeness, of course. As previously, a different selection of redundant equations may be made—in this case, Eqs. (81) and (82). The generality of these

[13]The alternative of using a four parameter system for computational convenience should be considered.

equations will be forsaken for the special case of force free motion, and the more general result will not be recorded in scalar form.

C. Equations of Motion in a Uniform Gravitational Field

The introduction of θ_1, θ_2, and θ_3 is necessary only because of $\mathbf{G}_i$ and $\mathbf{L}_i$, the external forces and torques applied to bodies A_i. Scalar equations of motion for the case

$$\mathbf{G}_i = \mathbf{L}_i = 0, \qquad i = 1, \cdots, n$$

i.e., free body motion, will be written in detail. But first, it is worth noting that not all non-zero values of $\mathbf{G}_i$ and $\mathbf{L}_i$ necessitate the use of attitude coordinates such as θ_1, θ_2, and θ_3.

Consider the special case

$$\begin{aligned} \mathbf{G}_i &= m_i \mathbf{g}, \qquad i = 1, \cdots, n \\ \mathbf{L}_i &= 0, \qquad i = 1, \cdots, n \end{aligned} \tag{83}$$

This characterizes a "uniform gravitational field," which is an approximation of engineering value.

The vector equations of motion in the previous section are to be expanded as scalar equations under restriction (83). In Eq. (79), the acceleration of P appears in the form (see Eq. 74).

$$\mathbf{a}^P = \ddot{X}_1 \hat{\mathbf{n}}_1 + \ddot{X}_2 \hat{\mathbf{n}}_2 + \ddot{X}_3 \hat{\mathbf{n}}_3$$

It is now more convenient to write

$$\mathbf{a}^P = a_1^P \hat{\mathbf{b}}_1 + a_2^P \hat{\mathbf{b}}_2 + a_3^P \hat{\mathbf{b}}_3 \tag{84}$$

As an alternative to Eq. (81),

$$\sum_{i=1}^{n} \mathbf{G}_i - \sum_{i=1}^{n} m_i \mathbf{a}^{P_i} = 0 \tag{85}$$

may be written. Substituting (83), and defining

$$M = \sum_{i=1}^{n} m_i \tag{86}$$

leads to

$$\mathbf{g} = \frac{1}{M} \sum_{i=1}^{n} m_i \mathbf{a}^{P_i} \tag{87}$$

Written in terms of $\hat{\mathbf{b}}_r$ measure numbers ($r = 1, 2, 3$), (87) becomes, upon expansion of $\mathbf{a}^{P_i}$ (see Eq. 53),

$$\begin{aligned} g_1 = \frac{1}{M} \sum_{i=1}^{n} m_i \, [a_1^P + \ddot{u}_{i1} + 2(\omega_2 \dot{u}_{i3} - \omega_3 \dot{u}_{i2}) - (\omega_2^2 + \omega_3^2) p_{i1} \\ - (\dot{\omega}_3 - \omega_1 \omega_2) p_{i2} + (\dot{\omega}_2 + \omega_3 \omega_1) p_{i3}] \end{aligned} \tag{88}$$

and similarly for g_2 and g_3 by cyclic permutation.

From the definitions of p_{ir}, q_{ir}, and x_{ir} in Section VI-A, and the identity of u_{ir} and x_{ir} for $r = 1, 2, 3$, $i = 1, \cdots, n$, it follows that

$$p_{i1} = q_{i1} + u_{i1}; \qquad p_{i2} = q_{i2} + u_{i2}; \qquad p_{i3} = q_{i3} + u_{i3} \tag{89}$$

Equation (88) may be written, using (89), as

$$\begin{aligned} g_1 = a_1^P + \frac{1}{M} \sum_{i=1}^{n} m_i \, [\ddot{u}_{i1} + 2(\omega_2 \dot{u}_{i3} - \omega_3 \dot{u}_{i2}) - (\omega_2^2 + \omega_3^2)(q_{i1} + u_{i1}) \\ - (\dot{\omega}_3 - \omega_1\omega_2)(q_{i2} + u_{i2}) + (\dot{\omega}_2 + \omega_1\omega_3)(q_{i3} + u_{i3})] \end{aligned} \tag{90}$$

Now, from (90) and (83), the $\hat{\mathbf{b}}_1$ measure number of $\mathbf{G}_i$ is given by

$$\begin{aligned} G_{i1} = m_i g_1 = m_i a_1^P + \frac{m_i}{M} \sum_{j=1}^{n} m_j \, [\ddot{u}_{j1} + 2(\omega_2 \dot{u}_{j3} - \omega_3 \dot{u}_{j2}) \\ - (\omega_2^2 + \omega_3^2)(q_{j1} + u_{j1}) - (\dot{\omega}_3 - \omega_1\omega_2)(q_{j2} + u_{j2}) \\ + (\dot{\omega}_2 + \omega_1\omega_3)(q_{j3} + u_{j3})] \end{aligned} \tag{91}$$

Substitution of (91) into (79) yields, for the $\hat{\mathbf{b}}_1$ measure number equation (others follow by cyclic permutation),

$$\begin{aligned} &- \sum_{j=1}^{n} \sum_{r=1}^{6} k_{i1jr} u_{jr} + m_i a_1^P + \frac{m_i}{M} \sum_{j=1}^{n} m_j \, [\ddot{u}_{j1} + 2(\omega_2 \dot{u}_{j3} - \omega_3 \dot{u}_{j2}) \\ &- (\omega_2^2 + \omega_3^2)(q_{j1} + u_{j1}) - (\dot{\omega}_3 - \omega_1\omega_2)(q_{j2} + u_{j2}) \\ &+ (\dot{\omega}_2 + \omega_1\omega_3)(q_{j3} + u_{j3})] - m_i a_1^P \\ &- m_i \, [\ddot{u}_{i1} + 2(\omega_2 \dot{u}_{i3} - \omega_3 \dot{u}_{i2}) - (\omega_2^2 + \omega_3^2)(q_{i1} + u_{i1}) \\ &- (\dot{\omega}_3 - \omega_1\omega_2)(q_{i2} + u_{i2}) + (\dot{\omega}_2 + \omega_1\omega_3)(q_{i3} + u_{i3})] = 0 \end{aligned} \tag{92}$$

An important feature of (92) is the cancellation of the terms a_1^P. The equations of motion contain explicitly neither the external force nor the coordinates of the mass center, and the attitude coordinates θ_1, θ_2, θ_3 have not been needed.

Equation (92) can be rewritten as below, with terms containing the known configuration constants q collected on the right side.

$$\begin{aligned} &\ddot{u}_{i1} + 2(\omega_2 \dot{u}_{i3} - \omega_3 \dot{u}_{i2}) - (\omega_2^2 + \omega_3^2) u_{i1} - (\dot{\omega}_3 - \omega_1\omega_2) u_{i2} + (\dot{\omega}_2 + \omega_3\omega_1) u_{i3} \\ &- \frac{1}{M} \sum_{j=1}^{n} m_j \, [\ddot{u}_{j1} + 2(\omega_2 \dot{u}_{j3} - \omega_3 \dot{u}_{j2}) - (\omega_2^2 + \omega_3^2) u_{j1} - (\dot{\omega}_3 - \omega_1\omega_2) \\ &\times u_{j2} + (\dot{\omega}_2 + \omega_3\omega_1) u_{j3}] \\ &+ \frac{1}{m_i} \sum_{j=1}^{n} \sum_{r=1}^{6} k_{i1jr} u_{jr} = (\omega_2^2 + \omega_3^2) q_{i1} + (\dot{\omega}_3 - \omega_1\omega_2) q_{i2} - (\dot{\omega}_2 + \omega_3\omega_1) q_{i3} \end{aligned} \tag{93}$$

By cyclic permutation, two more equations can be written directly; since i ranges from 1 to n, (93) represents $3n$ equations of motion.

A second set of $3n$ equations comes directly from Eq. (80), with $\mathbf{L} = 0$, from (83). Writing, for example, the scalar equation corresponding to the $\mathbf{b}_1$ measure

numbers, and grouping, leads to the equation

$$
\begin{aligned}
I_1^i \ddot{u}_{i4} &- (I_1^i + I_2^i - I_3^i)\,\omega_3 \dot{u}_{i5} + (I_1^i - I_2^i + I_3^i)\,\omega_2 \dot{u}_{i6} \\
&+ (I_2^i - I_3^i)(\omega_2^2 - \omega_3^2)\,u_{i4} + (I_3^i - I_1^i)(\dot{\omega}_3 + \omega_1\omega_2)\,u_{i5} + (I_1^i - I_2^i)(\dot{\omega}_2 - \omega_3\omega_1)\,\dot{u}_{i6} \\
&+ \sum_{j=1}^{n} \sum_{r=1}^{6} k_{iqjr} u_{jr} = -I_1^i \dot{\omega} + (I_2^i - I_3^i)\omega_2\omega_3
\end{aligned}
\tag{94}
$$

The only remaining equation of motion is (82), reproduced here as (95):

$$
\sum_{i=1}^{n} (\mathbf{L}_i + \mathbf{p}_i \times \mathbf{G}_i) + \sum_{i=1}^{n} (\mathbf{T}'_{A_i} - m_i \mathbf{p}_i \times \mathbf{a}^{P_i}) = 0 \tag{95}
$$

Under the "uniform gravitational field" restriction (95) becomes,

$$
\sum_{i=1}^{n} [\mathbf{T}'_{A_i} + m_i \mathbf{p}_i \times (\mathbf{g} - \mathbf{a}^{P_i})] = 0 \tag{96}
$$

But the equation of motion P_i provides

$$
m_i (\mathbf{g} - \mathbf{a}^{P_i}) = \sum_{q=1}^{3} \left(- \sum_{j=1}^{n} \sum_{r=1}^{6} k_{iqjr} u_{jr} \right) \hat{b}_q \tag{97}
$$

so the quantity $|m(\mathbf{g} - \mathbf{a}^{P_i})|$ is of the order of magnitude of u_{jr}, which is small enough to justify the omission of second-degree terms in u_{jr}, $j = 1, \cdots, n$; $r = 1, \cdots, 6$. It is therefore consistent to replace $\mathbf{p}_i$ in (96) by $\mathbf{q}_i$, which is a known constant position vector of P_i relative to P when the body is unstressed. With this substitution, and with the observation that, since P is the mass center,

$$
\sum_{i=1}^{n} m_i q_{i2} = 0 \quad \text{and} \quad \sum_{i=1}^{n} m_i q_{i3} = 0 \tag{98}
$$

Equation (96) yields, for the $\hat{\mathbf{b}}_1$ measure number equation,

$$
\sum_{i=1}^{n} [T'_{i1} - m_i (q_{i2} a_3^{P_i} - q_{i3} a_2^{P_i})] = 0 \tag{99}
$$

The acceleration measure numbers $a_2^{P_i}$ and $a_3^{P_i}$ can be replaced by the relative acceleration measure numbers $(a_2^{P_i} - a_2^P)$ and $(a_3^{P_i} - a_3^P)$ in (99), by virtue of (98). Expanding the acceleration (see Eqs. 87 and 88), and substituting for T'_{i1} (see Eq. 79), brings (99) to the form

$$
\begin{aligned}
\sum_{i=1}^{n} \Big(&- I_1^i (\dot{\omega}_1 + \ddot{u}_{i4} + \dot{u}_{i6}\omega_2 + u_{i6}\dot{\omega}_2 - \dot{u}_{i5}\omega_3 - u_{i5}\dot{\omega}_3 - u_{i6}\omega_1\omega_3 - u_{i5}\omega_1\omega_2) \\
&- I_2^i (-\omega_2\omega_3 + u_{i4}\omega_2^2 - u_{i4}\omega_3^2 + u_{16}\omega_1\omega_3 - \dot{u}_{i5}\omega_3 - \dot{u}_{i6}\omega_2 - \dot{u}_{i6}\omega_2) \\
&- I_3^i (\omega_2\omega_3 - u_{14}\omega_2^2 + u_{14}\omega_3^2 + u_{15}\omega_1\omega_2 + \dot{u}_{i5}\omega_3 + \dot{u}_{16}\omega_2 + \dot{u}_{i5}\omega_3) \\
&- m_i \{ q_{i2} [\dot{u}_{i3} + 2\omega_1\dot{u}_{i2} - 2\omega_2\dot{u}_{i1} - (q_{i3} + u_{i3})(\omega_1^2 + \omega_2^2) \\
&- (q_{i1} + u_{i1})(\dot{\omega}_2 - \omega_1\omega_3) + (q_{i2} + u_{i2})(\dot{\omega}_1 + \omega_3\omega_2)] \\
&- q_{i3} [\ddot{u}_{i2} + 2\omega_3\dot{u}_{i1} - 2\omega_1\dot{u}_{i3} - (q_{i2} + u_{i2})(\omega_1^2 + \omega_3^2) \\
&- (q_{i3} + u_{i3})(\dot{\omega}_1 - \omega_2\omega_3) + (q_{i1} + u_{i1})(\dot{\omega}_3 + \omega_1\omega_2)]\} \Big) = 0
\end{aligned}
\tag{100}
$$

Those terms free of u_{ir} and its derivatives can conveniently be collected on the right-hand side and written in terms of the moments and products of inertia of the *undeformed* body. With

$$\tilde{I}_1 \equiv \sum_{i=1}^{n} [I_1^i + m_i (q_{i2}^2 + q_{i3}^2)]$$

and

$$\tilde{J}_1 \equiv - \sum_{i=1}^{n} m_i q_{i2} q_{i3} \tag{101}$$

and similarly $\tilde{I}_2$, $\tilde{I}_3$, $\tilde{J}_2$, and $\tilde{J}_3$, Eq. (100) becomes, when reorganized,

$$\begin{aligned}
\sum_{i=1}^{n} \{ & (I_1^i \ddot{u}_{i4} - (I_1^i + I_2^i - I_3^i)\,\omega_3 \dot{u}_{i5} + (I_1^i - I_2^i + I_3^i)\,\omega_2 \dot{u}_{i6} \\
& + (I_2^i - I_3^i)(\omega_2^2 - \omega_3^2)\,u_{i4} + (I_3^i - I_1^i)(\dot{\omega}_3 + \omega_1\omega_2)\,u_{i5} \\
& + (I_2^i - I_2^i)(\dot{\omega}_2 - \omega_3\omega_1)\,u_{i6} + m_i \{ q_{i2}\ddot{u}_{i3} - q_{i3}\ddot{u}_{i2} \\
& + 2\,[\omega_1 (q_{i2}\dot{u}_{i2} + q_{i3}\dot{u}_{i3}) - (\omega_2 q_{i2} + \omega_3 q_{i3})\,\dot{u}_{i1}] \\
& - u_{i1}\,[q_{i2}(\dot{\omega}_2 - \omega_3\omega_1) + q_{i3}(\dot{\omega}_3 + \omega_1\omega_2)] \\
& + u_{i2}\,[q_{i2}(\dot{\omega}_1 + \omega_2\omega_3) + q_{i3}(\omega_3^2 + \omega_1^2)] \\
& - u_{i3}\,[q_{i2}(\omega_1^2 + \omega_2^2) - q_{i3}(\dot{\omega}_1 - \omega_2\omega_3)]\}\} \\
= & - \tilde{I}_1\dot{\omega}_1 - \tilde{J}_3\dot{\omega}_2 - \tilde{J}_2\dot{\omega}_3 + (\tilde{I}_2 - \tilde{I}_3)\,\omega_2\omega_3 + \tilde{J}_3\omega_3\omega_1 \\
& - \tilde{J}_2\omega_1\omega_2 - \tilde{J}_1(\omega_2^2 - \omega_3^2)
\end{aligned} \tag{102}$$

Equation (102) and its two permutations provide, with the $3n$ equations from (94) and the $3n$ equations (93), $6n + 3$ equations in the $6n + 3$ variables ω_1, ω_2, ω_3 and u_{ir}, $i = 1, \cdots, n$; $r = 1, \cdots, 6$. The six constraining equations of definition (43) and (44) still apply, however, and the above set of differential equations is still six times redundant. In application to a specific problem, a convenient selection of six equations must be omitted, or used as a check.

These equations, although quite restricted in comparison with the vector equations of motion under general forces (see Section VI-B), are still quite complex, and they extend beyond the required scope of this report. Consequently, the general equations of motion (in Section VI-B) will be restricted more severely.

D. Equations of Motion for Free, Flexible Bodies

Now scalar equations of motion will be written explicitly for the more restricted problem of the force-free flexible body, for which $\mathbf{G}_i = 0$ and $\mathbf{L}_i = 0$, $i = 1, \cdots, n$.

Since the resultant force applied to B is zero, the acceleration of mass center P is zero. Therefore $\ddot{X}_1$, $\ddot{X}_2$, and $\ddot{X}_3$ are zero, and the terms involving $\hat{\mathbf{n}}$ in the vector equations of motion (see Section VI-B) disappear. This removes the necessity of introducing the angles θ_1, θ_2, θ_3 into the equations of motion, and it becomes convenient to use the variables ω_1, ω_2, ω_3 as three of the unknowns of these equations. There are now only $6n + 3$ scalar equations of motion in the unknowns ω_1, ω_2, ω_3, x_{i1}, x_{i2}, x_{i3}, θ_{i1}, θ_{i2}, θ_{i3} $(i = 1, \cdots, n)$. Of these equations, six remain redundant, as the six constraint equations persist.

The first of the equations of motion becomes (from the scalar expansion of Eq. 79)

$$
\begin{aligned}
&- \sum_{j=1}^{n} \sum_{r=1}^{6} k_{i1jr} u_{jr} - m_i [\ddot{u}_{i1} - p_{i1} (\omega_2^2 + \omega_3^2) - p_{i2} (\dot{\omega}_3 - \omega_1 \omega_2) \\
&+ p_{i3} (\dot{\omega}_2 + \omega_1 \omega_3) + 2\omega_2 \dot{u}_{i3} - 2\omega_3 \dot{u}_{i2}] = 0, \qquad i = 1, \cdots, n
\end{aligned}
\tag{103}
$$

and by cyclic permutation two additional sets of n equations are available from (103). Secondly, the scalar expansion of (80) provides

$$
\begin{aligned}
&- \sum_{j=1}^{n} \sum_{r=1}^{6} k_{i4jr} u_{jr} \\
&- I_1^i (\dot{\omega}_1 + \ddot{u}_{i4} + \dot{u}_{i6}\omega_2 + u_{i6}\dot{\omega}_2 - \dot{u}_{i5}\omega_3 - u_{i5}\dot{\omega}_3 - u_{i6}\omega_1\omega_3 - u_{i5}\omega_1\omega_2) \\
&- I_2^i (- \omega_2\omega_3 + u_{i4}\omega_2^2 - u_{i4}\omega_3^2 + u_{i6}\omega_1\omega_3 - \dot{u}_{i6}\omega_2 - u_{i6}\dot{\omega}_2 - \dot{u}_{i5}\omega_3) \\
&- I_3^i (\omega_2\omega_3 - u_{i4}\omega_2^2 + u_{i4}\omega_3^2 + u_{i5}\omega_1\omega_2 + \dot{u}_{i5}\omega_3 + \dot{u}_{i6}\omega_2 + u_{i5}\dot{\omega}_3) \\
&= 0, \qquad i = 1, 2, \cdots, n
\end{aligned}
\tag{104}
$$

and cyclic permutation gives two additional sets of n equations from (104). Lastly, from (82) one may obtain

$$
\begin{aligned}
&\sum_{i=1}^{n} (- I_1^i (\dot{\omega}_1 + \ddot{u}_{i4} + \dot{u}_{i6}\omega_2 + u_{i6}\dot{\omega}_2 - \dot{u}_{i5}\omega_3 - u_{i5}\dot{\omega}_3 - u_{i6}\omega_1\omega_3 - u_{i5}\omega_1\omega_2) \\
&- I_2^i (- \omega_2\omega_3 + u_{i4}\omega_2^2 - u_{i4}\omega_3^2 + u_{i6}\omega_1\omega_3 - \dot{u}_{i5}\omega_3 - \dot{u}_{i6}\omega_2 - u_{i6}\dot{\omega}_2) \\
&- I_3^i (\omega_2\omega_3 - u_{i4}\omega_2^2 + u_{i4}\omega_3^2 + u_{i5}\omega_1\omega_2 + \dot{u}_{i5}\omega_3 + \dot{u}_{i6}\omega_2 + u_{i5}\dot{\omega}_3) \\
&- m_i \{p_{i2} [\ddot{u}_{i3} + 2\omega_1\dot{u}_{i2} - 2\omega_2\dot{u}_{i1} - p_{i3} (\omega_1^2 + \omega_2^2) - p_{i1} (\dot{\omega}_2 - \omega_1\omega_3) + p_{i2} (\dot{\omega}_1 + \omega_3\omega_2)] \\
&- p_{i3} [\ddot{u}_{i2} + 2\omega_3\dot{u}_{i1} - 2\omega_1\dot{u}_{i3} - p_{i2} (\omega_1^2 + \omega_3^2) - p_{i3} (\dot{\omega}_1 - \omega_2\omega_3) \\
&+ p_{i1} (\dot{\omega}_3 + \omega_1\omega_2)]\}) = 0
\end{aligned}
\tag{105}
$$

and cyclic permutation of (105) provides two more equations.

For convenient reference, the symbols appearing in (103), (104), and (105) are summarized below:

1. k_{iqjr} are the elements in the conventional "stiffness matrix."
2. u_{jr} are the "deformations" of body B, i.e., the deviations (linear and angular) between points or bodies of B and $\tilde{B}$. Specifically, $u_{i1} = x_{i1}$, $u_{i2} = x_{i2}$, $u_{i3} = x_{i3}$, $u_{i4} = \theta_{i1}$, $u_{i5} = \theta_{i2}$, and $u_{i6} = \theta_{i3}$, for $i = 1, 2, \cdots, n$.
3. m_i is the mass of body A_i.
4. p_{i1}, p_{i2}, p_{i3} are the $\hat{\mathbf{b}}_r$ measure numbers of $\mathbf{p}_i$, the position vector of mass center P_i of body A_i relative to mass center P of B (where $\hat{\mathbf{b}}_r$ are parallel to body-fixed principal axes of $\tilde{B}$, and hence to the instantaneous principal axes of B).
5. ω_1, ω_2, ω_3 are the $\hat{\mathbf{b}}_r$ measure numbers of the (Newtonian) angular velocity of $\tilde{B}$.
6. I_1^i, I_2^i, I_3^i are the centroidal principal moments of inertia of body A_i.

In the interests of facilitating later coordinate transformations, the equations represented by (103) and (104) are reformulated as a single matrix equation in the form[14]

$$[k]\{u\} + [m]\{\ddot{u}\} = [m][A]\{\dot{u}\} + [m][B]\{u\} + [m][G]\{q\} + \{R\} \tag{106}$$

As has been noted previously, in this equation the stiffness matrix $[k]$ is a $6n$ by $6n$ matrix comprised of k_{iqjr}, the inertia matrix $[m]$ is a diagonal matrix possessing diagonal elements, m_{11}, m_{12}, m_{13}, I_1^1, I_2^1, I_3^1, m_{21}, $\cdots$, I_3^n (where $m_{i1} = m_{i2} = m_{i3} = m_i$ in most applications), the n-dimensional column matrices $\{u\}$ and $\{q\}$ are composed of the variables u_{ir} and q_{ir}, respectively, where $i = 1, \cdots, n$, and $q_{ir} = p_{ir} - u_{ir}$ for $r = 1, 2, 3$, and $q_{ir} = 0$ for $r = 4, 5, 6$. The new matrices $[A]$, $[B]$, $[G]$, and $\{R\}$ in (106) are defined below.

The n-dimensional column matrix $\{R\}$ can be expanded in the form[15]

$$\{R\} = -[\underline{I}]\{\underline{\dot{\omega}}\} - [\underline{\underline{\tilde{\omega}}}][\underline{I}]\{\underline{\omega}\} \tag{107}$$

where

$$\{\underline{\omega}\} = [\omega_1, \omega_2, \omega_3, 0, \cdots, 0]^T$$

and

$$\{\dot{\omega}\} = [\dot{\omega}_1, \dot{\omega}_2, \dot{\omega}_3, 0, \cdots, 0]^T \tag{108}$$

where the superscript T indicates transposition to a column matrix, and, in partitioned form, the doubly extended angular velocity matrix $[\underline{\underline{\tilde{\omega}}}]$ is given by

$$[\underline{\underline{\tilde{\omega}}}] = \begin{bmatrix} \underline{\tilde{\omega}} & & 0 \\ & \underline{\tilde{\omega}} & \\ 0 & & \ddots \\ & & & \underline{\tilde{\omega}} \end{bmatrix} \tag{109}$$

where the 6 by 6 submatrix $[\underline{\tilde{\omega}}]$ is

$$[\underline{\tilde{\omega}}] = \left[\begin{array}{c|c} 0 & 0 \\ \hline 0 & \omega \end{array}\right] \tag{110}$$

[14]Although this matrix formulation can be constructed by careful inspection of (103) and (104), it is actually simpler to adopt a matrix or tensor notation from the outset. This is illustrated in Appendix E, where full matrix derivations appear. The less esoteric vector-scalar notation in the body of this report is adopted to facilitate the use of intermediate forms of these equations in computations.

[15]The underline implies that the matrix is constituted of zeros and submatrices of the type implied by the symbol; e.g., $[\underline{I}]$ is an extended inertia matrix containing the usual inertia matrices of the sub-bodies A_i and zeros.

and $\tilde{\omega}$ is the matrix of the angular velocity tensor; i.e.,

$$[\tilde{\omega}] = \begin{bmatrix} 0 & -\omega_3 & \omega_2 \\ \omega_3 & 0 & -\omega_1 \\ -\omega_2 & \omega_1 & 0 \end{bmatrix} \tag{111}$$

The extended inertia matrix $[\underline{I}]$ in (107) appears as a $6n$ by $6n$ matrix that is null except for the first three columns, as indicated by

$$[\underline{I}] = \left[\begin{array}{c|c} \underline{0} & \\ \underline{I^1} & \\ \underline{0} & \\ \underline{I^2} & \\ \cdot & 0 \\ \cdot & \\ \cdot & \\ \underline{0} & \\ \underline{I^n} & \end{array}\right] \tag{112}$$

where each of the smallest partitions is 3 by 3, and the nonzero element I^i is a diagonal matrix with I_1^i, I_2^i, I_3^i on the diagonal. The $\{\underline{R}\}$ matrix may be seen upon expansion to represent the rigid-body angular acceleration terms for $\tilde{B}$ as they would appear in Euler's dynamical equations.

The $6n$ by $6n$ matrix A in (106) is defined by

$$[A] = \left[\begin{array}{c|c} A^1 & \\ A^2 & \\ \cdot & 0 \\ \cdot & \\ \cdot & \\ A^n & \end{array}\right] \tag{113}$$

where the 6 by 6 matrix $[A^i]$ is given by

$$[A^i] = \left[\begin{array}{c|c} -2\tilde{\omega} & 0 \\ \hline 0 & A_1^i \end{array}\right] \tag{114}$$

with $[A_1^i]$ the skew-symmetric matrix

$$[A_1^i] = \begin{bmatrix} 0 & \omega_3(I_1^i + I_2^i - I_3^i) & \omega_2(-I_1^i + I_2^i - I_3^i) \\ -\omega_3(+I_1^i + I_2^i - I_3^i) & 0 & \omega_1(-I_1^i + I_2^i - I_3^i) \\ -\omega_2(-I_1^i + I_2^i - I_3^i) & -\omega_1(-I_1^i + I_2^i + I_3^i) & 0 \end{bmatrix} \tag{115}$$

Thus $[A_1^i]$ may be written

$$[A_1^i] = [I^i]\,[\tilde{\omega}] + [\tilde{h}] - [\tilde{\omega}]\,[I^i] \tag{116}$$

where $\tilde{h}$ is the matrix formed by the same rules as $[\tilde{\omega}]$ from the vector $\{I_1^i\omega_1, I_2^i\omega_2, I_3^i\omega_3\}$, which is the angular momentum of body A^i within linear terms in θ_{ir} for the product $[\tilde{h}^i]\ \{\dot{\theta}\}$.

The $6n$ by $6n$ matrix $[B]$ in (106) is given by

$$[B] = \left[\begin{array}{c|c} B^1 & \\ \hline B^2 & \\ \hline \cdot & \\ \cdot & 0 \\ \cdot & \\ \hline B^n & \end{array}\right] \tag{117}$$

where the 6 by 6 matrix $[B^i]$ is

$$[B^i] = \left[\begin{array}{c|c} W & 0 \\ \hline 0 & B_1^i \end{array}\right] \tag{118}$$

with

$$[W] = \begin{bmatrix} (\omega_2^2 + \omega_3^2) & -\omega_1\omega_2 + \dot{\omega}_3 & -\omega_3\omega_1 - \dot{\omega}_2 \\ -\omega_1\omega_2 - \dot{\omega}_3 & \omega_3^2 + \omega_1^2 & -\omega_2\omega_3 + \dot{\omega}_1 \\ -\omega_3\omega_1 + \dot{\omega}_2 & -\omega_2\omega_3 - \dot{\omega}_1 & \omega_1^2 + \omega_2^2 \end{bmatrix} \tag{119}$$

so that

$$[W] = -[\tilde{\omega}]\,[\tilde{\omega}] - [\dot{\tilde{\omega}}] \tag{120}$$

(where the dot indicates time differentiation of the elements) and with

$$[B_1^i] = \begin{bmatrix} (I_2^i - I_3^i)(\omega_3^2 - \omega_2^2) & (I_1^i - I_3^i)(\dot{\omega}_3 + \omega_1\omega_2) & (I_2^i - I_1^i)(\dot{\omega}_2 - \omega_1\omega_3) \\ (I_3^i - I_2^i)(\dot{\omega}_3 - \omega_2\omega_1) & (I_3^i - I_1^i)(\omega_1^2 - \omega_3^2) & (I_2^i - I_1^i)(\dot{\omega}_1 + \omega_2\omega_3) \\ (I_3^i - I_2^i)(\dot{\omega}_2 + \omega_3\omega_1) & (I_1^i - I_3^i)(\dot{\omega}_1 - \omega_3\omega_2) & (I_1^i - I_2^i)(\omega_2^2 - \omega_1^2) \end{bmatrix} \tag{121}$$

As can be established by expansion, $[B_1^i]$ may be written

$$[B_1^i] = -[I^i]\,[\dot{\tilde{\omega}}] + [\tilde{h}^i]\,[\tilde{\omega}] - [\tilde{\omega}]\,[I^i]\,[\tilde{\omega}] + [\tilde{\theta}]\,[I^i]\,\{\dot{\omega}\} - [\tilde{\theta}]\,[\tilde{\omega}]\,[I^i]\,\{\omega\} \tag{122}$$

where $[\tilde{\theta}]$ is a matrix constructed from $\{\theta\}$ by the rules previously used for $[\tilde{\omega}]$ and $[\tilde{h}]$. As shown in Appendix E, the last two terms above cancel, as a consequence of the relationship

$$[B_1^i] = -[I^i]\,[\dot{\tilde{\omega}}] + [\tilde{h}^i]\,[\tilde{\omega}] - [\tilde{\omega}]\,[I^i]\,[\tilde{\omega}] \tag{123}$$

Finally, the $6n$ by $6n$ matrix $[G]$ in (106) is

$$\left[\begin{array}{c|c} \underline{W} & \end{array}\right] \tag{124}$$

where the 6 by 6 matrix W is

$$[\underline{W}] = \left[\begin{array}{c|c} W & 0 \\ \hline 0 & 0 \end{array}\right] \tag{125}$$

with $[W]$ the 3 by 3 matrix previously defined (see Eq. 120).

Thus the matrix form (106) is established to represent $6n$ scalar equations of motion in the $6n + 3$ unknowns u_{ir}, $i = 1, \cdots, n$, $r = 1, \cdots, 6$, and ω_1, ω_2, ω_3. Constraint equations (44) make this a complete set. It may be emphasized that unknowns $\omega_1, \omega_2, \omega_3$ appear nonlinearly in the coefficient matrices $[A]$, $[B]$, and $[G]$.

E. Transformation to Modal Coordinates

The equations governing small vibrations about stable equilibrium of a discrete parameter elastic system may be written

$$[m]\{\ddot{y}\} + [k]\{y\} = 0 \tag{126}$$

where the vector (or column matrix) $\{y\}$ contains n coordinates y_r representing displacements and perhaps rotations of the discrete parts of the system, $[m]$ is the inertia matrix, and $[k]$ the stiffness matrix of the system. (See Ref. 15 for more detailed definitions and for background in structural vibration theory, which is presupposed here.)

As (126) is a set of linear, ordinary differential equations with constant coefficients, its solution is comprised of terms such as $C_r e^{i\Omega_r t}$, as long as the Ω_r are unique. (In general, C_r and Ω_r are complex, and Ω_r is not necessarily unique; but in application to undamped structures, C_r and Ω_r are real, and Ω_r is usually unique, and will be so assumed here.) The symbol i represents $(-1)^{1/2}$.

Substituting the indicated form into (126), canceling $C_r e^{i\Omega_r t}$ from each term, and writing the generic Ω for all Ω_r, one obtains

$$[k]\{y\} - \Omega^2 m\{y\} = 0 \tag{127}$$

Upon premultiplying the above by $-[a]/\Omega^2$, where $[a]$ (called the flexibility matrix) is the inverse of $[k]$, so that $[a][k] = [E]$, the identity matrix, this becomes

$$([a][m] - (1/\Omega^2)[E])\{y\} = 0 \tag{128}$$

which may be recognized as an eigenvalue problem, with $(1/\Omega^2)$ the eigenvalue (or characteristic value) of the so-called "dynamical matrix" $[D] \equiv [a][m]$. As $[D]$ is an n by n matrix, n eigenvalues emerge from (128), and the corresponding n values of Ω_r are the natural frequencies of the system. If a particular value of Ω_r is substituted back into (128) for the purpose of solving for the corresponding $\{y\}^r$, called the rth eigenvector or modal column, the homogeneity of (128) prevents complete success, and $\{y\}^r$ can be determined only within a multiplicative constant (so its "direction" is determinate but its "magnitude" arbitrary). It should be recognized that, in vibration analysis, the rth eigenvector describes the geometry of the natural mode of oscillation at natural frequency Ω_r.

The existence of $[D]$ has been taken for granted, but this clearly requires the existence of $[a]$, the inverse of $[k]$, and for an unconstrained system $[k]$ is singular. This result has a natural physical interpretation. An unconstrained body (e.g., a free body in space) can perform nonoscillatory rigid body motions as well as oscillatory deformations, and a nonoscillatory motion is characterized by zero frequency Ω. This corresponds to an infinite eigenvalue, which is impossible for $[D]$ comprised of finite terms. Hence for an unconstrained system, the rigid body modes must be suppressed somehow if the above procedure is to remain operative. This can be done in various ways, but the method recommended here is that described in Ref. 15 (Section 4.10), in which the stiffness matrix $[k]$ is partitioned to exclude rigid-body motions, and the nonsingular portion $[k^*]$ replaces $[k]$ in the preceding analysis. The details of this procedure are not as important here as the knowledge that practical procedures exist for the modal analysis of unconstrained flexible bodies.

It may be noted that the actual calculation of the eigenvalues of $[D]$ for a complex system is a computer operation that proceeds iteratively, converging first (and thus most accurately) upon the higher eigenvalues. As formulated above, this means most reliable determination of the lowest natural frequencies and mode shapes, and as these dominate a nonresonant response this is desirable. Other methods of accommodating unconstrained systems may sacrifice this advantage, and result in first convergence upon the highest (and least interesting) natural frequencies and mode shapes.

The modal analysis problem is now reduced to the determination of eigenvalues and eigenvectors of some matrix $[D]$, which may have been reduced to accommodate rigid body (zero-frequency) modes. This is equivalent to "diagonalizing" $[D]$, and this means that there exists a transformation

$$\{y\} = [\gamma]\,\{\eta\} \tag{129}$$

such that, in the transformed equation

$$[K]\,\eta - \Omega^2\,[M]\,\eta = 0 \tag{130}$$

the matrices $[K]$ and $[M]$ are diagonal, so that the equivalent set of scalar equations in coordinates η_i is an uncoupled set of equations such as

$$K_{ii}\eta_i - \Omega_i^2 M_{ii}\eta_i = 0 \tag{131}$$

One can, of course, revert to the original form and write

$$K_{ii}\eta_i + M_{ii}\ddot{\eta}_i = 0 \tag{132}$$

which can be divided by M_{ii} and written (with the obvious definitions) as

$$\ddot{\eta}_i + \Omega_i^2\eta_i = 0 \tag{133}$$

As noted in Section III-C, at this stage of the analysis it is convenient to introduce damping, so that (133) becomes

$$\ddot{\eta}_i + 2\zeta_i\Omega_i\dot{\eta}_i + \Omega_i^2\eta_i = 0 \tag{134}$$

Thus construction of equations of vibration in canonical form (133) requires only the determination of the transformation matrix $[\gamma]$. As shown in Ref. 15 (pp. 135 ff), the columns of $[\gamma]$ are the "modal columns" or eigenvectors of the system, so the transformation to modal coordinates η_i is readily accomplished for the equations of small vibration about a stable equilibrium configuration.

The present objective is the application of such a transformation to equations (103 and (104), which represent the large-angle rotational motions of slightly flexible bodies. It should be recalled that the coordinates u_{ir}, linearized in these equations, represent the motions of components of the system relative to $\tilde{B}$, which is defined by (43) and (44) so that the motion of $\tilde{B}$ is described by the rigid-body modes of the vibration-theory modal analysis. In general, a free body has six such modes, three in translation and three in rotation; let these be labeled, respectively, η_{n-5}, η_{n-4}, η_{n-3}, and η_{n-2}, η_{n-1}, η_n, so that of the n total degrees of freedom in the system the last six modal coordinates η_i represent rigid-body motion. In vibration analysis, all y_i are comprised of all η_i in general (see Eq. 129), and both sets of variables are assumed small. In the present problem, only the first $n-6$ variables η_i remain small, so that, if coordinates y_i had been chosen, no linearization of any y_i terms could be justified. Even the alternative of defining coordinates relating the motions of individual sub-bodies in the model to a reference body arbitrarily selected from among them would fail in transformation to η_i, as the large coordinates of the reference body would participate in all of the coordinates η_i and none could be assumed small. The introduction of $\tilde{B}$ to absorb the last six (large) values of η_i is the only apparent alternative.

If the column matrix of modal coordinates η_i is so partitioned as to separate the deformation modes $\{\eta_D\}$ from the rigid body modes $\{\eta_R\}$, (129) becomes

$$\{y\} = [\gamma] \left\{ \begin{array}{c} \eta_D \\ \hline \eta_R \end{array} \right\} \tag{135}$$

The coordinates u_{ir} in the equations of motion (103)–(105) are given by

$$\{u\} = [\gamma] \left\{ \begin{array}{c} \eta_D \\ \hline 0 \end{array} \right\} \tag{136}$$

so that the variables u_{ir} correspond to y_i less the rigid-body modes accommodated by motion of $\tilde{B}$. The equation

$$[K] \left\{ \begin{array}{c} \eta_D \\ \hline \eta_R \end{array} \right\} - \Omega^2 [M] \left\{ \begin{array}{c} \eta_D \\ \hline \eta_R \end{array} \right\} = 0$$

establishes the validity of

$$[K] \left\{ \begin{array}{c} \eta_D \\ \hline 0 \end{array} \right\} - \Omega^2 [M] \left\{ \begin{array}{c} \eta_D \\ \hline 0 \end{array} \right\} = 0 \tag{137}$$

so the transformation $[\gamma]$ obtained from the eigenvectors of a vibration analysis uncouples the "vibration terms" represented above in u_{ir} as well as those in y_j.

This does not mean that the equations of motion (103–105) are uncoupled in u_{ir} by applying the transformation matrix $[\gamma]$ to the u_{ir} variables. If, for example, Eq. (103) is rewritten as

$$(1/m_i) \sum_{j=1}^{n} \sum_{r=1}^{6} k_{i1jr} u_{jr} + \ddot{u}_{i1} = [p_{i1}(\omega_2^2 + \omega_3^2) - p_{i2}(\dot{\omega}_3 - \omega_1\omega_2) - p_{i3}(\dot{\omega}_2 + \omega_1\omega_3) - 2\omega_2\dot{u}_{i3} + 2\omega_3\dot{u}_{i2}] \tag{138}$$

only the left-hand side of the equation would be uncoupled by the above transformation.

If the problems of transforming the right-hand side of (138) are set aside for the moment, the attractive aspects of the transformation can be emphasized. Just as for equations of vibration, the left sides of (138) and all other equations of motion constructed similarly from (103) and (104) acquire in transformation the form $(\ddot{\eta}_r + \Omega_r^2 \eta_r)$, and to these terms one may conveniently add $2\zeta_r\Omega_r\dot{\eta}_r$ to incorporate damping into the equations of motion. For the reasons outlined in Section III-C, it is desirable to include damping by estimating or measuring ζ_r for each mode and to insert damping terms at this advanced stage of the analysis rather than attempt to accommodate damping in the original discrete parameter model by hypothesizing dashpots connecting the various parts of the system.

In anticipation of recording the final equation of motion in matrix form, the operations for normal mode transformation of the equations of vibration theory are noted explicitly.

The vibration equation

$$[k]\{y\} + [m]\{\ddot{y}\} = 0 \tag{139}$$

when subjected to the transformation

$$\{y\} = [\gamma]\{\eta\} \tag{140}$$

becomes

$$[k][\gamma]\{\eta\} + [m][\gamma]\{\ddot{\eta}\} = 0 \tag{141}$$

which can be premultiplied by $[\gamma]^T$, the transpose of $[\gamma]$, to assume the form

$$[\gamma]^T[k][\gamma]\{\eta\} + [\gamma]^T[m][\gamma]\{\ddot{\eta}\} = 0 \tag{142}$$

or

$$[K]\{\eta\} + [M]\{\eta\} = 0 \tag{143}$$

where diagonal matrices [K] and $[M]$ are defined by the preceding equation. One may now insert the damping matrix $[C]$ to provide

$$[K]\{\eta\} + [C]\{\dot{\eta}\} + [M]\{\ddot{\eta}\} = 0 \tag{144}$$

where the conditions indicated in Ref. 15 are implicitly assumed in writing $[C]$ as diagonal, and where the individual elements C_{ii} are obtained from

$$C_{ii} = 2\zeta_i \Omega_i M_{ii} \tag{145}$$

with the damping constant ζ_i (percentage of critical damping in mode i) either estimated or measured.

Consider now a parallel sequence of operation in transforming (106) for general motion of a slightly flexible body.

With the definition

$$\{\bar{\eta}\} = \left\{ \frac{\eta_D}{0} \right\} \tag{146}$$

equation (136) becomes

$$\{u\} = [\gamma]\{\bar{\eta}\} \tag{147}$$

which transformation in (106) leaves

$$[k][\gamma]\{\bar{\eta}\} + [m][\gamma]\{\ddot{\bar{\eta}}\} = [m][A][\gamma]\{\dot{\bar{\eta}}\} + [m][B][\gamma]\{\bar{\eta}\} + [m][G]\{q\} + \{R\} \tag{148}$$

Multiplication by $[\gamma]^T$, with the definitions of [K] and $[M]$ from (143) yields

$$[K]\{\bar{\eta}\} + [M]\{\ddot{\bar{\eta}}\} = [\gamma]^T[m][A][\gamma]\{\dot{\bar{\eta}}\} + [\gamma]^T[m][B][\gamma]\{\bar{\eta}\} + [\gamma]^T[m][G]\{q\} + [\gamma]^T\{R\} \tag{149}$$

Finally, the damping matrix $[C]$ defined for (144) can be inserted to obtain the result

$$[K]\{\bar{\eta}\} + [C]\{\dot{\bar{\eta}}\} + [M]\{\ddot{\bar{\eta}}\} = [\gamma]^T[m][A][\gamma]\{\dot{\bar{\eta}}\} + [\gamma]^T[m][B][\gamma]\{\bar{\eta}\} + [\gamma]^T[m][G]\{q\} + [\gamma]^T\{R\} \tag{150}$$

For application of this result, one might find that substitution in (150) of the relationship

$$[\gamma]^T[m] = [M][\gamma]^{-1} \tag{151}$$

followed by premultiplication by $[M]^{-1}$ offers further simplification.

It should be noted that the vector $\{\bar{\eta}\}$ contains only the $6n$–6 variables contained in $\{\eta_D\}$, the coordinates of the deformation modes. Three additional variables in (150) are ω_1, ω_2, and ω_3. For the special case represented by the equations of motion above, the three remaining coordinates (rigid-body translations X_1, X_2, X_3) have already been shown to be zero. This means that three of the scalar equations implied in (150) must be redundant or trivial. Results are left in this form, however, in order to retain the general structure of the equations; redundancies, if non-trivial, can serve as checks on specific computations, which will almost necessarily be performed by an electronic computer.

VII. CONCLUSIONS

A. Energy-Sink Model Analysis (Method I)

This method has the substantial advantages of simplicity in execution and ease of physical interpretation. However, it requires approximations that cannot be rigorously justified and may, in unusual cases, produce erroneous results; and it is distinctly limited in scope. Application is restricted to those physical systems for which the energy dissipation mechanism can be isolated analytically and for which inertial forces arising from deformation or relative motion have negligible effect on the Poinsot motion of the spacecraft.

Attention is directed particularly to the treatment by this method of energy losses due to stress hysteresis (see Section IV-E). This application is noteworthy because this dissipation mechanism would be difficult to handle by straightforward construction of equations of motion for an equivalent discrete parameter model (Method II), and because it is an unavoidable source of energy dissipation in any spacecraft. For vehicles with a damper specifically designed into the system, this dissipation source is probably negligible, but for simple nonspecifically damped vehicles, stress hysteresis damping may provide a substantial portion of the dissipation. It is recommended that such a vehicle be idealized in a simple way for energy sink analysis as a preliminary approach to prediction of free body motions. Although the results may be expected to indicate smaller deviations in time from initial motion than will occur, such an analysis may be useful in preliminary selection of vehicle geometry and inertia distribution. This analysis should generally be followed by a modal study (Method III) of the final configuration.

In a similar way, the energy sink method should be used in application to systems with small discrete dampers (e.g., pendulum dampers), because this is generally the simplest approach analytically. Such an analysis should be confirmed (at least for the flight configuration) by Method II.

B. Discrete Parameter Model Analysis (Method II)

In application to a vehicle for which a proper discrete parameter model (with discrete dampers) can be constructed, one cannot expect to find a method more sound than the direct construction of equations of motion for the system, using Newton or Lagrange. The resulting equations may be complicated unless the vehicle is extremely simple, and for this reason the energy sink method may be used for preliminary analysis, but final evaluation should be based on Method II.

However, only vehicles with specifically designed discrete dampers (e.g., pendulums, sliding masses, etc.) permit a valid discrete parameter idealization. Thus Method II is more sharply limited in scope than Method I.

C. Modal Model Analysis (Method III)

A most difficult problem is posed by the freely rotating, realistically complex space vehicle that includes no single mechanism for the dissipation of energy but that might, in a number of unidentifiable or unanalyzable ways, lose sufficient energy to change the vehicle attitude enough to jeopardize a mission. This problem might be anticipated whenever other constraints of design impose the necessity of maintaining fixed in space a vehicle axis about which the moment of inertia is minimal. The otherwise attractive alternative of passive spin-stabilization is jeopardized by the instability of rotation about this axis.

Unless some means can be devised for analyzing the motion, this design alternative must be abandoned, and either the vehicle inertia properties must be changed or an active attitude control system must be substituted. In some cases the first alternative is not feasible; the vehicle in question may be elongated in order to meet constraints imposed by a launch vehicle, or it may itself be a combination of "payload" and propulsion stage or stages later to be separated. In practice, then, the absence of an established analytical approach to the dynamics problem may impose the requirement for active control—with its associated disadvantages. Method III is the only general analytical approach to this problem thus far available.

The complexities of the analysis constitute the major permanent shortcoming of this method. Until computer programs are written and the method is applied to meaningful sample problems, the practical utility of this approach must remain in question. But it should be clearly recognized that the transformation to modal coordinates is motivated by a very practical consideration, namely the difficulty in estimating damping for other coordinate systems. It does appear, therefore, that this is the most feasible approach to meaningful idealization of the vehicle,

and that analytical obstacles based on physics are best overcome by this method. Any computational difficulties that may arise are more apt to be surmountable than troubles with the physics of the problem; and on this basis Method III is recommended for further development in application to specific problems.

APPENDIX A
Historical Background

Explorer I was injected into orbit with a nominal motion of simple rotation (at about eleven rev/sec) about an inertially fixed axis of body symmetry, and within the period of an orbit (about 90 min) this axis was observed to be precessing on a cone with half-angle of approximately 60 deg. Deductions of rotational motion were made from radio signal strength observations, as reported in Ref. 13.

An immediate inquiry at JPL into the reasons for this unexpected deviation of the satellite from its nominal attitude yielded the conclusion that flexible wire turnstile antennas on the satellite dissipated energy and that energy dissipation concurrent with angular momentum preservation resulted in "coning" of the spin axis and eventual "tumbling," or rotating about an axis transverse to the axis of symmetry. The "terminal" motion of *Explorer I* was thus rotation about the axis of maximum moment of inertia. (The ratio of moments of inertia, transverse to axial, was about 75 for the early *Explorers*.) Analysis supporting these conclusions regarding rotation is recorded in Appendix C of Ref. 13.

The second *Explorer*, launched about a month after the first, also had the "whip" antennas; but it was not successfully injected into orbit, and no rotational data is available.

By March 26, 1958, when *Explorer III* was launched, antenna design changes had been incorporated. The whip antennas were removed from this and all subsequent *Explorers*. (See Figure A-1 for configurations of *Explorers I* and *III*.) As indicated in Ref. 13, upon injection into orbit the spin axis of *Explorer III* was precessing on a cone of half-angle less than 10 deg, and this figure doubled in about a day's time. It was a full week before this angle reached the 60-deg magnitude attained by *Explorer I* in one orbit. Thus the conclusion that the whip antennas were responsible for the attitude drift is substantially supported. This conclusion was reinforced four months later by data from *Explorer IV*, which was essentially tumbling (precessing on a cone of half angle approaching 90 deg) only after eight to ten days in orbit (*Explorer III* took slightly longer). At this slow energy dissipation rate the effects of external torque are not negligible; according to Ref. 27 the angular momentum vector changed orientation as much as 10 deg per day. Thus this is a "mixed" problem (see Section II-D).

The *Explorers*, however, were not the first satellites to provide opportunity for observation of satellite rotation from transmission signals. *Sputnik I*, launched October 4, 1957, provided data from which observers throughout the world could deduce the angular motions of the satellite. In this country, Prof. R. N. Bracewell of the Stanford University Radio Propagation Laboratory began tracking *Sputnik I* and recording its signals almost immediately, and he soon reached the conclusion that certain signal oscillations could best be explained by precession of the spinning satellite. Although *Sputnik I* did not provide measurable evidence of the effects of energy dissipation on rotation, Prof. Bracewell anticipated the results observed in *Explorer I*, and presented them to his students in a set of dittoed notes. When the U.S. satellite was launched, the Stanford group found the signals gave evidence of awkward motions, and since information was unavailable on the inertia characteristics of both *Explorer I* and *Sputnik*, they abandoned the *Explorer* and restricted their attention to the Soviet satellites, which (by virtue of their angular motions) provided signals more useful in ionospheric studies of interest to the group.

In May of 1958, Prof. Bracewell presented a lecture on satellite rotation at the Lockheed Astronautics Colloquium, after which he was invited to publish his results in *Advances in the Astronautical Sciences* of the AAS, to

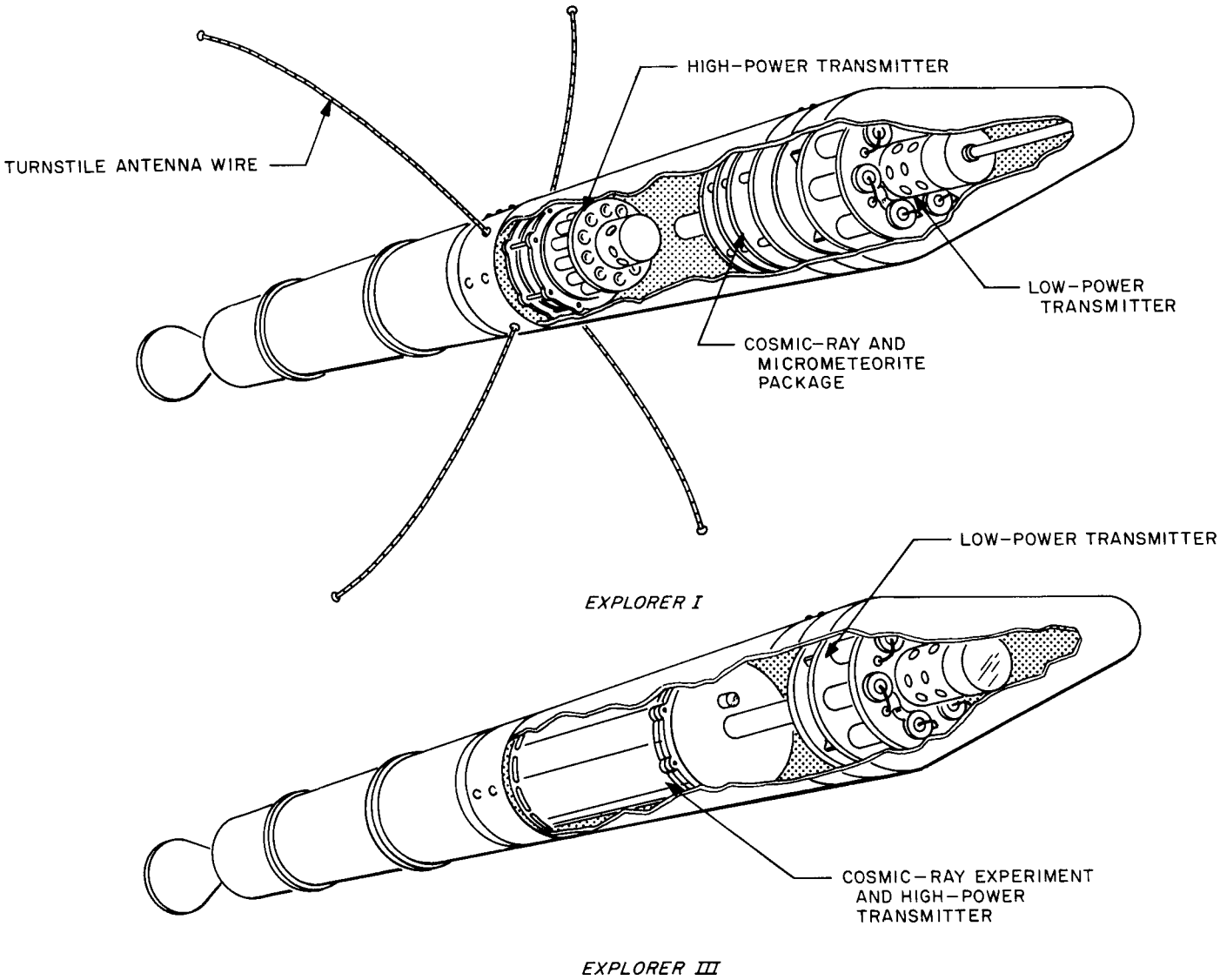

Fig. A-1. Cutaway view of *Explorers I* and *III*

which he agreed (see Ref. 33). Prior to this publication, however, an article by Bracewell and O. K. Garriott[16] appeared in Nature (Ref. 14). This source provides the first known published statement of the tendency of free nonrigid bodies to approach in time a state of rotation about the principal axis of maximum moment of inertia.

In this latter paper is the speculation that *Sputnik III* (launched May 15, 1958) may be disk-like as regards moments of inertia, as the signals showed a regularity absent in signals from *Sputnik I*. A Soviet publication (Ref. 34) of 1961, however, indicates that the ratio of moments of inertia, transverse to axial, was about 2.5, and that the satellite was "spinning" about its axis only very slowly, and this axis was precessing from the outset on a cone of half angle between 85 and 90 deg, so the regularity of the signal is due to regular, stable "tumbling" rather than stable spin about the axis of symmetry. In this paper, Beletskii explores in detail the various influences on the motion of this satellite, but does not consider the possibility of energy dissipation effects. A preliminary examination of available translated Soviet literature does not, in fact, disclose any recognition of the influence of energy dissipation on attitude stability.

It should be noted that a paper by Harold Perkel (Ref. 31) appearing in the same volume as the second

[16]Garriott later joined the Stanford physics faculty, and in 1965 was named among this nation's first scientist-astronauts.

published Bracewell paper indicates that investigators at RCA were independently examining this influence.

Since 1958 this problem has been considered in numerous company reports and published papers. A continuing program of investigation at TRW Systems resulted in Refs. 17, 18, 20, 24, 25, 28, 30, and 35, among others. A concurrent program at the Naval Ordnance Test Station is reflected in Refs. 2, 3, 22, 23, 30, and other NOTS reports. Other papers and reports indicate further activity in this area at Hughes (Ref. 5), RCA (Ref. 6), General Motors (Ref. 36), Bendix (Ref. 32), the Ballistic Research Laboratory (Ref. 37), NASA (Refs. 4 and 38), and JPL (Ref. 19).

Many of these studies record the development and analysis of specific damping devices for incorporation into spacecraft nominally spinning stably about axes of maximum moment of inertia. In some cases, experimental results are available. Some studies treat more general dissipation mechanisms, employing the method of analysis called the energy-sink method in this report; these papers are discussed in detail in Section IV.

Developments of the stated attitude-stability criterion for nonrigid bodies by several independent sources is not surprising in view of the simplicity of the supporting arguments. It is surprising that preliminary inquiry does not disclose the discovery of this criterion prior to the launching of satellites.

In Gray's treatise (Ref. 39) reference is made to experiments by Kelvin in 1876 in which he determined that a fluid-filled noncentroidally supported top is unstable in its vertical attitude if the top is prolate, although it can be spun stably when it is oblate. This problem, of course, is different from the present one, but it points up an interest by Kelvin in the problem area. Nonetheless, careful examination of his comprehensive *Treatise on Natural Philosophy* (Ref. 8) produces no evidence that Kelvin was familiar with the instability of a torque-free nonrigid body in rotation about an axis of minimum moment of inertia. He does, however, apply the idea of momentum conservation with energy dissipation to a discussion of the earth-moon system (to conclude that in time the moon would become a "stationary satellite" above a fixed point on the earth's equator, in the absence of solar perturbations, etc.).[17] And he does further consider the problem of the free rotation of a mass of fluid, held intact by the mutual gravitational attraction of its particles.[18] It has been known since Newton's time that an oblate ellipsoid of revolution, of any given eccentricity, is a figure of equilibrium of a mass of homogeneous incompressible fluid, rotating about an axis with determinate angular velocity, and subject to no forces but those of gravitation among its parts. The stability of this configuration was examined by Kelvin and others by minimizing the kinetic energy while maintaining a given angular momentum. As this is the argument used in the development of the stability criterion for free nonrigid bodies, Kelvin and others clearly established at least the basis for modern conclusions. This is recognized by Prof. Bracewell, who seems to be the first of record to formulate the stability result, and perhaps the only investigator who reached conclusions without any physical observation (such as *Explorer I*) from which to generalize. In personal correspondence dated June 22, 1965, Prof. Bracewell offers the following acknowledgment:

"As for the general problem, it is familiar in galactic dynamics as the cause of flattening of galaxies. Put collisions into a rotating cloud and it will flatten. In terms of the stars of our galaxy it is clear that those that are going in circular orbits in a plane perpendicular to the axis of angular momentum are less likely to collide than those that are also oscillating parallel to the axis. The stars in fact do not collide much nor do they lose energy at a collision, but the dust and gas do. As a result we have a highly flattened volume occupied by stars (formed from gas before much flattening took place), and a spherical volume occupied by globular clusters. In a word, friction damps out degrees of freedom not contributing to the angular momentum. I was aware of these phenomena and believe that the general principle involved was in my mind while working on the satellite problem."

As galaxies are sometimes modeled as masses of incompressible fluid, the above-mentioned principles are evidently classical in origin.

Perhaps the closest parallel to the freely rotating, slightly nonrigid body problem as applied to spinning space vehicles is the analogous problem applied to spinning molecules. The required jump to quantum mechanics does not obscure the fact that physicists have for many years recognized the fact that maximum (minimum) classical kinetic energy corresponds to rotation about the principal axis of minimum (maximum) moment of inertia (see Ref. 40, p. 44). In this context one might expect a statement of a stability criterion that is almost directly

[17]Ref. 8, Vol. 1, Part 1, article 276, p. 256.

[18]Ref. 8, Vol. 1, Part 2, articles 769–778, pp. 324–335.

applicable to the space vehicle problem, although this writer, unfamiliar with the field, has no explicit evidence that such a criterion has sufficient value in this field to have been enunciated.

Until further evidence is available, one must reluctantly accept the remarkable conclusion that, until satellites were launched in 1957, a rotational stability criterion for free nonrigid bodies had not been formulated.

APPENDIX B

Free Rigid-Body Attitude Stability

The equations of motion of a general rigid body free of applied torque may be written in the form

$$\left.\begin{aligned} \dot{\omega}_1 - K_1\omega_2\omega_3 &= 0 \\ \dot{\omega}_2 - K_2\omega_3\omega_1 &= 0 \\ \dot{\omega}_3 - K_3\omega_1\omega_2 &= 0 \end{aligned}\right\} \tag{B-1}$$

where dots indicate time differentiations;

$$K_1 = (I_2 - I_3)/I_1 \tag{B-2}$$

and K_2 and K_3 are defined by cyclic permutation of subscripts in (B-2); ω_1, ω_2, ω_3 are the measure numbers of the angular velocity of the body for unit vectors fixed along the three centroidal principal axes of the body; and I_1, I_2, and I_3 are the moments of inertia about these axes.

These equations are satisfied by

$$\left.\begin{aligned} \omega_1 &= S, \quad \text{a constant} \\ \omega_2 &= 0 = \omega_3 \end{aligned}\right\} \tag{B-3}$$

That is, the body can perform steady rotation about any centroidal principal axis.

The transformation

$$\left.\begin{aligned} \omega_1 &= S + \Omega_1 \\ \omega_2 &= \Omega_2 \\ \omega_3 &= \Omega_3 \end{aligned}\right\} \tag{B-4}$$

produces the variational equations

$$\dot{\Omega}_1 - K_1\Omega_2\Omega_3 = 0 \tag{B-5}$$

$$\dot{\Omega}_2 - K_2\Omega_3(S + \Omega_1) = 0 \tag{B-6}$$

$$\dot{\Omega}_3 - K_3\Omega_2(S + \Omega_1) = 0 \tag{B-7}$$

which, upon linearization, become

$$\dot{\Omega}_1 = 0 \tag{B-8}$$

$$\dot{\Omega}_2 - K_2S\Omega_3 = 0 \tag{B-9}$$

$$\dot{\Omega}_3 - K_3S\Omega_2 = 0 \tag{B-10}$$

Differentiating (B-9) and substituting the resulting Ω_3 into (B-10) yields

$$\ddot{\Omega}_2 - K_2K_3S^2\Omega_2 = 0 \tag{B-11}$$

and a similar operation produces

$$\ddot{\Omega}_3 - K_2K_3S^2\Omega_3 = 0 \tag{B-12}$$

These equations have the solution

$$\left.\begin{aligned} \Omega_2 &= A_1e^{\lambda_1 t} + A_2e^{\lambda_2 t} \\ \Omega_3 &= B_1e^{\lambda_1 t} + B_2e^{\lambda_2 t} \end{aligned}\right\} \tag{B-13}$$

where

$$\lambda_{1,2} = \pm S(K_2K_3)^{1/2} \tag{B-14}$$

and A_1, A_2, B_1, B_2 are established by the initial conditions and may be taken arbitrarily small.

If

$$K_2K_3 > 0 \tag{B-15}$$

the solutions (B-13) are unbounded, and the zero solution of the linearized equations (B-8)–(B-10) is unstable. Consequently, the zero solution of the nonlinear variational equations (B-5)–(B-7) is unstable, and one may say that steady rotation about a centroidal principal axis is an unstable motion if the moment of inertia about that axis is intermediate in magnitude relative to the other two centroidal principal moments of inertia. (Note that $K_2K_3 > 0$ if $I_3 > I_1 > I_2$ or $I_2 > I_1 > I_3$, from B-2.)

If

$$K_2K_3 < 0 \tag{B-16}$$

the solutions (B-13) remain arbitrarily small, and the zero solution of the linearized equations (B-8)–(B-10) is stable. This makes the zero solution of the nonlinear variational equation infinitesimally stable, but it does not determine the Lyapunov stability of this motion.

To apply Lyapunov's direct method to this question, note from (B-5)–(B-7) that multiplication of (B-6) by Ω_2K_3 and of (B-7) by $-\Omega_3K_2$ provides in sum

$$K_3\Omega_2\dot{\Omega}_2 - K_2\Omega_3\dot{\Omega}_3 = 0$$

or

$$\frac{d}{dt}\left(\frac{1}{2}K_3\Omega_2^2 - \frac{1}{2}K_2\Omega_3^2\right) = 0 \tag{B-17}$$

Define

$$V_1(\Omega_2, \Omega_3) = K_3\Omega_2^2 - K_2\Omega_3^2 \tag{B-18}$$

so that

$$\frac{dV_1}{dt} = 0 \tag{B-19}$$

If

$$K_3 > 0 \quad \text{and} \quad K_2 < 0 \tag{B-20}$$

so I_1 is the maximum centroidal moment of inertia, then V_1 is positive definite in Ω_2 and Ω_3 and the motion is stable with respect to these variables, by Lyapunov's stability theorem (see Ref. 1 p. 109).

If

$$K_3 < 0 \quad \text{and} \quad K_2 > 0 \tag{B-21}$$

so I_1 is the minimum centroidal moment of inertia, then V_1 is negative definite in Ω_2 and Ω_3 and still the motion is stable in Ω_2 and Ω_3.

In either case, Ω_2 and Ω_3 remain arbitrarily small; it must still be shown that Ω_1 remains small for stability of the motion.

To establish this, multiply (B-5) by $+2K_3(\Omega_1 + S)$ and (B-7) by $-2K_1\Omega_3$, and add the results to obtain

$$2K_3\dot{\Omega}_1(\Omega_1 + S) - 2K_1\Omega_3\dot{\Omega}_3 = 0$$

or

$$\frac{d}{dt}\left[K_3(\Omega_1 + S)^2 - K_1\Omega_3^2\right] = 0 \tag{B-22}$$

so

$$\Omega_3^2 = \frac{K_3}{K_1}(\Omega_1 + S)^2 + c \tag{B-23}$$

where c is a constant that can be evaluated from initial conditions. As Ω_1 and Ω_3 are initially small, and Ω_3 is always small, Ω_1 must also remain small. Therefore, if the moment of inertia about a centroidal principal axis is either maximum or minimum, steady rotation about that axis is a Lyapunov stable motion.

APPENDIX C

Poinsot's Construction for Free Rotation of Rigid Bodies

As established by Euler (Ref. 10), the equations of motion of a free rigid body can be written in terms of the angular velocity measure numbers as below.

$$I_1\dot{\omega}_1 - \omega_2\omega_3(I_2 - I_3) = 0 \qquad \text{(C-1)}$$

$$I_2\dot{\omega}_2 - \omega_3\omega_1(I_3 - I_1) = 0 \qquad \text{(C-2)}$$

$$I_3\dot{\omega}_3 - \omega_1\omega_2(I_1 - I_2) = 0 \qquad \text{(C-3)}$$

where the moments of inertia I_1, I_2, I_3 and the angular velocity measure numbers ω_1, ω_2, ω_3 correspond to principal axes fixed in the body and passing through the centroid (or through any point fixed in the body and also fixed in inertial space—an alternative ignored here).

Two first integrals can be obtained from these equations. First multiplying (C-1), (C-2), (C-3) respectively by ω_1, ω_2, ω_3 and adding, one obtains

$$I_1\omega_1\dot{\omega}_1 + I_2\omega_2\dot{\omega}_2 + I_3\omega_3\dot{\omega}_3 = 0$$

or

$$\frac{d}{dt}\left[\tfrac{1}{2}(I_1\omega_1^2) + \tfrac{1}{2}(I_2\omega_2^2) + \tfrac{1}{2}(I_3\omega_3^2)\right] = 0$$

which may be integrated to obtain the energy integral

$$\tfrac{1}{2}I_1\omega_1^2 + \tfrac{1}{2}I_2\omega_2^2 + \tfrac{1}{2}I_3\omega_3^2 = T \qquad \text{(C-4)}$$

where T is a constant recognized as the kinetic energy. This equation may be written

$$\frac{\omega_1^2}{\left(\frac{2T}{I_1}\right)} + \frac{\omega_2^2}{\left(\frac{2T}{I_2}\right)} + \frac{\omega_3^2}{\left(\frac{2T}{I_3}\right)} = 1 \qquad \text{(C-5)}$$

Equation (C-4) is evidently equivalent to the statement of conservation of kinetic energy T. Form (C-5) suggests geometrical interpretation as an ellipsoid, called the energy ellipsoid, described in a body-fixed Cartesian coordinate system. The distance from its origin to a point on its surface is the magnitude of $\boldsymbol{\omega}$ for rotation about the corresponding body-fixed line with the prescribed energy.

Another first integral, the momentum integral, is obtained by multiplying (C-1), (C-2), (C-3) respectively by $I_1\omega_1$, $I_2\omega_2$, and $I_3\omega_3$ and adding, to provide

$$I_1^2\omega_1\dot{\omega}_1 + I_2^2\omega_2\dot{\omega}_2 + I_3^2\omega_3\dot{\omega}_3 = 0$$

which, when integrated, yields

$$I_1^2\omega_1^2 + I_2^2\omega_2^2 + I_3^3\omega_3^2 = H^2 \qquad \text{(C-6)}$$

This is a statement of conservation of the magnitude H of angular momentum $\mathbf{H}$. From considerations more fundamental than Euler's equations (C-1)–(C-4), $\mathbf{H}$ is a constant vector in the absence of external torque. In terms of body-fixed unit vectors $\hat{\mathbf{d}}_1, \hat{\mathbf{d}}_2, \hat{\mathbf{d}}_3$ paralleling principal axes corresponding respectively to I_1, I_2, and I_3 or ω_1, ω_2, and ω_3,

$$\mathbf{H} = I_1\omega_1\hat{\mathbf{d}}_1 + I_2\omega_2\hat{\mathbf{d}}_2 + I_3\omega_3\hat{\mathbf{d}}_3 \qquad \text{(C-7)}$$

The gradient of the kinetic energy T in the ω_1, ω_2, ω_3 space is given by

$$\nabla T = \frac{\partial T}{\partial \omega_1}\hat{\mathbf{d}}_1 + \frac{\partial T}{\partial \omega_2}\hat{\mathbf{d}}_2 + \frac{\partial T}{\partial \omega_3}\hat{\mathbf{d}}_3$$

so from (C-4) one obtains

$$\nabla T = I_1\omega_1\hat{\mathbf{d}}_1 + I_2\omega_2\hat{\mathbf{d}}_2 + I_3\omega_3\hat{\mathbf{d}}_3 = \mathbf{H} \qquad \text{(C-8)}$$

Geometrically, this means that the normal to the energy ellipsoid at its intersection with the $\boldsymbol{\omega}$ vector from its origin is always parallel to the angular momentum vector, which is fixed in inertial space. Thus the normal is always perpendicular to a plane called the invariable plane, which, by definition, is an inertially fixed plane normal to $\mathbf{H}$. (Strictly, this development requires only zero resultant centroidal *torque* on the body, and not zero *force* as assumed here. In the more general case, the invariable plane maintains fixed orientation in inertial space, although it may translate arbitrarily.)

The vector from the origin of the energy ellipsoid to a point on its surface is $\boldsymbol{\omega}$, the instantaneous angular velocity; and the direction of $\boldsymbol{\omega}$ in this body-fixed ellipsoid determines the instantaneous body-axis of rotation, which by definition is instantaneously fixed in inertial space.

The distance from the energy ellipsoid origin to the invariable plane is given by the ratio of twice the kinetic energy and the magnitude of the angular momentum, because

$$\boldsymbol{\omega} \cdot (\mathbf{H}/H) = 2T/H \tag{C-9}$$

Thus the body-fixed energy ellipsoid moves in inertial space in such a way that its center (corresponding to the body centroid) remains a fixed distance above an inertially fixed plane. (In the more general case of motion torque-free but not force-free, the invariable plane translates to follow the body centroid, and the distance between them involves the constant kinetic energy of rotation).

Now it can be recognized that the energy ellipsoid is rolling without slip on the invariable plane with its centroid fixed a distance $2T/H$ above the plane (see Fig. C-1.) There can be no slip because the point of contact, called the *pole*, is the intersection of the body-fixed instantaneous axis of rotation with the invariable plane, and both are at rest, if momentarily. Thus the motion of the body (fixed to the energy ellipsoid) is completely determined.

Consider now the properties of the energy ellipsoid, as defined by (C-5). Its semiaxes are given by $(2T/I_1)^{1/2}$, $(2T/I_2)^{1/2}$, $(2T/I_3)^{1/2}$, and, since T is constant, these semiaxes are inversely proportional to the square roots of the principal moments of inertia. Thus the ellipsoid is, roughly speaking, elongated in the same directions as the physical body itself. If the equation of this ellipsoid is written

$$\frac{\omega_1^2}{\left(\frac{1}{I_1}\right)} + \frac{\omega_2^2}{\left(\frac{1}{I_2}\right)} + \frac{\omega_3^2}{\left(\frac{1}{I_3}\right)} = 2T$$

it becomes evident that it is geometrically similar to the inertia ellipsoid, which is described in the ρ_1, ρ_2, ρ_3 space by

$$\frac{\rho_1^2}{\left(\frac{1}{I_1}\right)} + \frac{\rho_2^2}{\left(\frac{1}{I_2}\right)} + \frac{\rho_3^2}{\left(\frac{1}{I_3}\right)} = 1 \tag{C-10}$$

Hence the preceding discussion could be applied to the inertia ellipsoid too, and in fact this is the approach generally adopted in texts. (See any of the classical dynamics texts published by Dover for elaborate treatments, and Ref. 7 for a particularly lucid account).

Although the traditional approach requires the introduction of a new concept, the inertia ellipsoid, and the constant distance between the ellipsoid centroid and the invariable plane is a less convenient ratio to remember, namely $(2T/H)^{1/2}$ instead of $2T/H$, as shown by noting $\boldsymbol{\rho} \cdot \mathbf{H}/H = \boldsymbol{\omega}/\omega\,(I)^{1/2} \cdot \mathbf{H}/H = 2T/H\,(I\omega^2)^{1/2} = (2T)^{1/2}/H)$, still the use of the inertia ellipsoid is advantageous in attempting an extension to the case for which T is not constant. This extension is considered in Section IV.

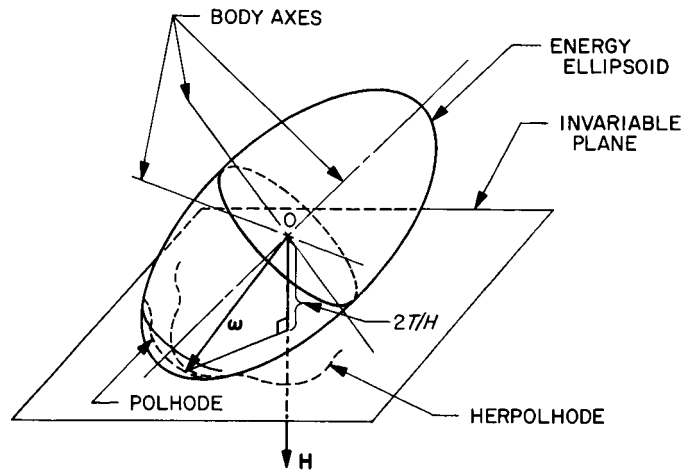

Fig. C-1. Poinsot motion of a free rigid body

In interpreting Poinsot's construction, it is irrelevant which ellipsoid is used, as they are geometrically similar and both roll without slip on a plane fixed in inertial space. Subsequent reference to "the ellipsoid" may be interpreted either way.

The locus of the pole on the ellipsoid is called the *polhode*, and its locus on the invariable plane is the *herpolhode*.[19] The polhode is always a closed path on the ellipsoid, so the herpolhode must have a periodic geometry, but it does not close upon itself unless the body is inertially axisymmetric. Figure C-2 illustrates a family of polhodes for a body with $I_3 = (3/2)\,I_2 = 2I_1$. The kinetic energy and angular momentum are established by initial conditions which determine the polhode to be followed in a given case.

The preceding geometrical description is subject to a further interpretation which is particularly convenient for bodies of symmetry. As the tip of the angular velocity vector $\boldsymbol{\omega}$ in Fig. C-1 traverses the polhode, the locus of the instantaneous axis defined by $\boldsymbol{\omega}$ is a cone fixed in the

[19]Poinsot coined these terms from the Greek; polhode means "axis-path" and herpolhode means "serpentine path," although the latter is perhaps inappropriate, since the herpolhode is always concave inward.

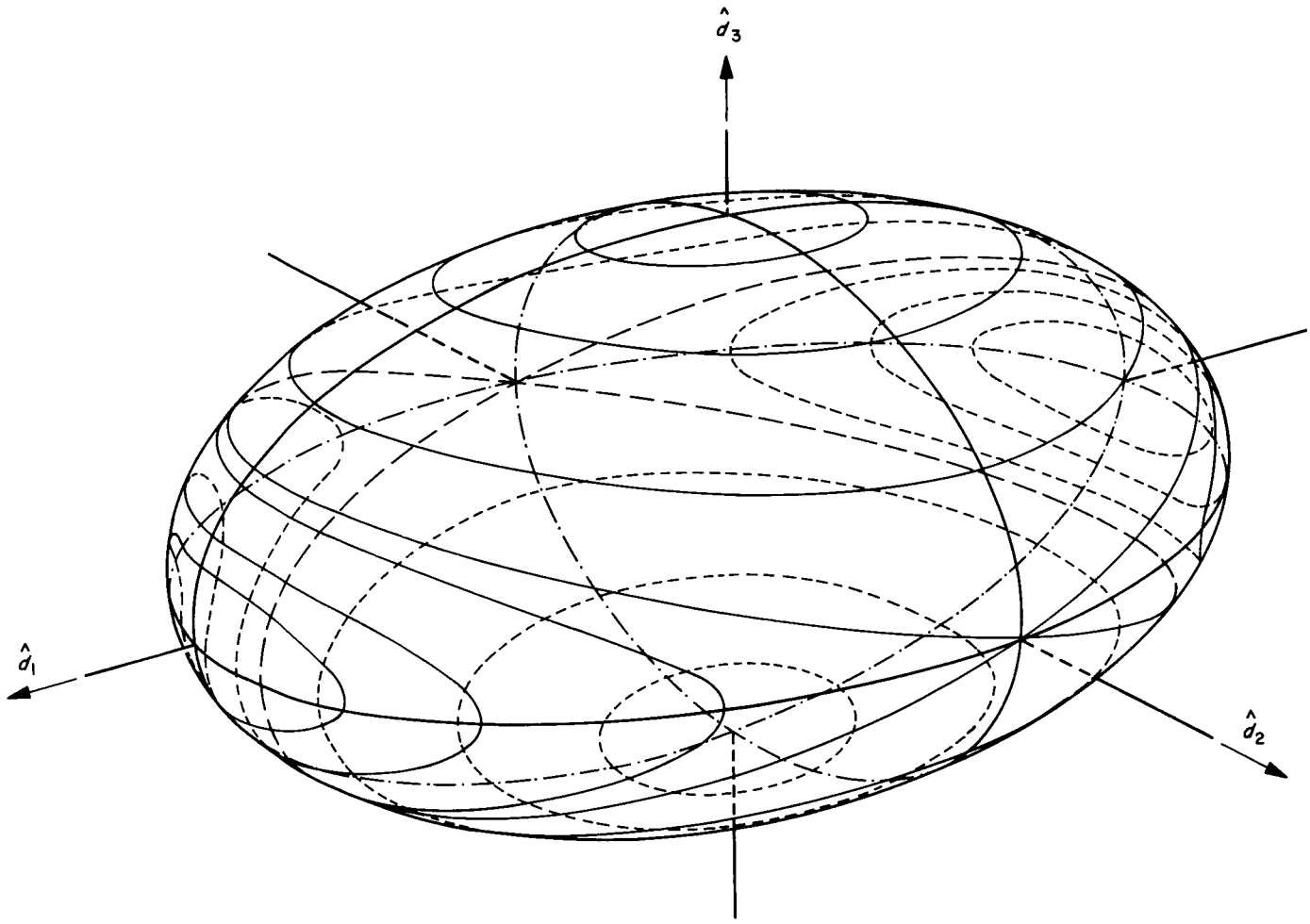

Fig. C-2. Polhodes for a body with $I_3 = 3I_2/2 = 2I_1$

body. Simultaneously, the ω vector traverses the herpolhode, tracing a conical surface in inertial space, although not generally a closed cone. If the body is symmetric, both are right circular cones, and the relative motion of the cones is more readily visualized. In any case, however, the body-fixed cone is rolling without slip on the space-fixed cone, the line of contact being the instantaneous axis of rotation. Figures C-3 and C-4 illustrate this motion for two bodies of symmetry, with ellipsoids prolate and oblate, respectively.

The differences in these results are more easily grasped after analytical solution of the equations of motion, which is relatively simple for the special case of symmetric bodies treated here.

Euler's dynamical equations for a rigid, torque-free body of symmetry, with $I_2 = I_1$, are

$$\left.\begin{aligned} I_1\dot{\omega}_1 - \omega_2\omega_3(I_1 - I_3) &= 0 \\ I_1\dot{\omega}_2 - \omega_3\omega_1(I_3 - I_1) &= 0 \\ I_3\dot{\omega}_3 &= 0 \end{aligned}\right\} \quad \text{(C-11)}$$

Hence $\omega_3 = \omega_{30}$, a constant established by the initial conditions. (By convention, $\omega_{i0} \equiv \omega_i$ at time $t = 0$, for $i = 1, 2, 3$.)

Define

$$p = \omega_{30}\left[(I_3/I_1) - 1\right] \quad \text{(C-12)}$$

Then the nontrivial equations of motion become

$$\begin{aligned} \dot{\omega}_1 + p\omega_2 &= 0 \\ \dot{\omega}_2 - p\omega_1 &= 0 \end{aligned} \quad \text{(C-13)}$$

with solutions

$$\begin{aligned} \omega_2 &= A\cos pt + B\sin pt \equiv \omega_{20}\cos pt + \omega_{10}\sin pt \\ \omega_1 &= -A\sin pt + B\cos pt \equiv -\omega_{20}\sin pt + \omega_{10}\cos pt \end{aligned} \quad \text{(C-14)}$$

The constant angular momentum vector may be written

$$\mathbf{H} = I_1\omega_1\hat{\mathbf{d}}_1 + I_2\omega_2\hat{\mathbf{d}}_2 + I_3\omega_3\hat{\mathbf{d}}_3$$

or, since $I_2 = I_1$, as

$$\mathbf{H} = I_1(\omega_1\hat{\mathbf{d}}_1 + \omega_2\hat{\mathbf{d}}_2) + I_3\omega_3\hat{\mathbf{d}}_3$$

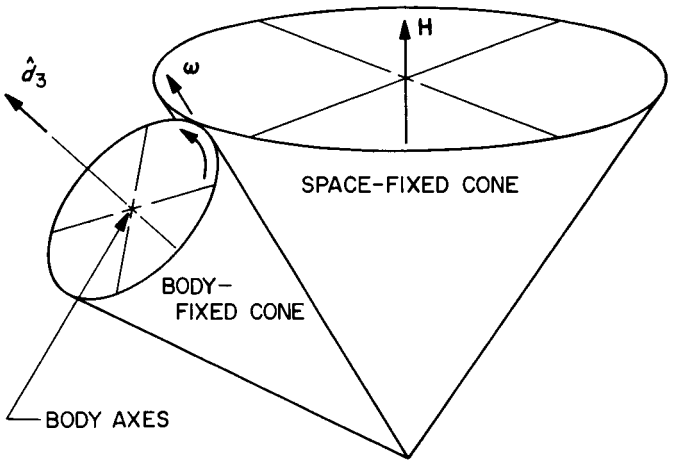

Fig. C-3. Motion cones for a free prolate spheroid

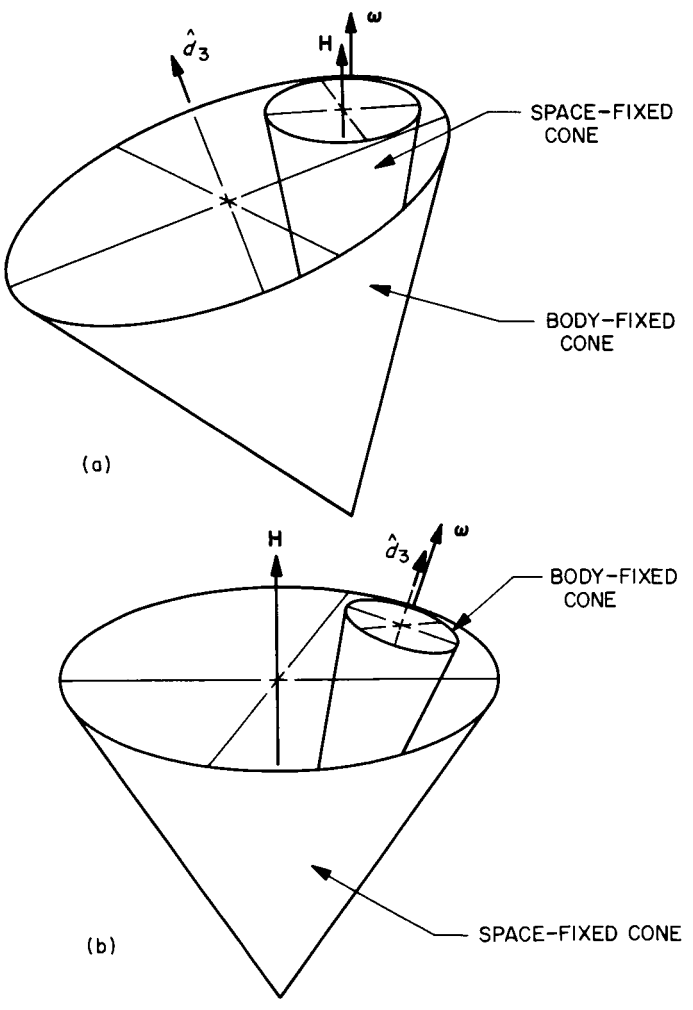

Fig. C-4. Motion cones for a free oblate spheroid

Combining the vectors in the parentheses produces

$$H = I_i\,(\omega_1^2 + \omega_2^2)^{1/2}\,\hat{\mathbf{u}} + I_3\omega_3\hat{\mathbf{d}}_3 \qquad \text{(C-15)}$$

where $\hat{\mathbf{u}}$ is a convenient unit vector. From (C-14), $(\omega_1^2 + \omega_2^2)$ is $(A^2 + B^2)$, a constant, so $\mathbf{H}$ is the sum of two vectors of constant magnitude, and hence it lies in a fixed orientation in the plane of those vectors if the set is concurrent. For interpretation, consider Fig. C-5, which shows the Euler angle generation of the attitude of a body (unit vector triad $\hat{\mathbf{d}}_1$, $\hat{\mathbf{d}}_2$, $\hat{\mathbf{d}}_3$) relative to a frame established by $\hat{\mathbf{a}}_1$, $\hat{\mathbf{a}}_2$, $\hat{\mathbf{a}}_3$ which is typically an inertial frame. Since $\mathbf{H}$ is also inertially fixed and the 3-axis is the symmetry axis, $\hat{\mathbf{a}}_3$ is selected to parallel $\mathbf{H}$. From the above, the unit vector $\hat{\mathbf{u}}$ is in the plane of $\hat{\mathbf{d}}_1$ and $\hat{\mathbf{d}}_2$ by definition, and now also in the plane of $\hat{\mathbf{d}}_3$ and $\hat{\mathbf{a}}_3$. Clearly $\hat{\mathbf{u}}$ is $\hat{\mathbf{c}}_2$. Now, as $\hat{\mathbf{c}}_3$ and $\hat{\mathbf{d}}_3$ are identical,

$$\mathbf{H} = I_1\,(A^2 + B^2)^{1/2}\hat{\mathbf{c}}_2 - I_3\omega_{30}\hat{\mathbf{c}}_3 \qquad \text{(C-16)}$$

and neither angular momentum nor angular velocity has a component in the $\hat{\mathbf{c}}_1$ direction. Thus the nutation angle θ is constant, and there are only spin ϕ and precession ψ. The angular velocity is given by

$$\boldsymbol{\omega} = \dot{\phi}\hat{\mathbf{c}}_3 + \dot{\psi}\hat{\mathbf{a}}_3 = \dot{\psi}\sin\theta\hat{\mathbf{c}}_2 + (\dot{\phi} + \dot{\psi}\cos\theta)\,\hat{\mathbf{c}}_3 \qquad \text{(C-17)}$$

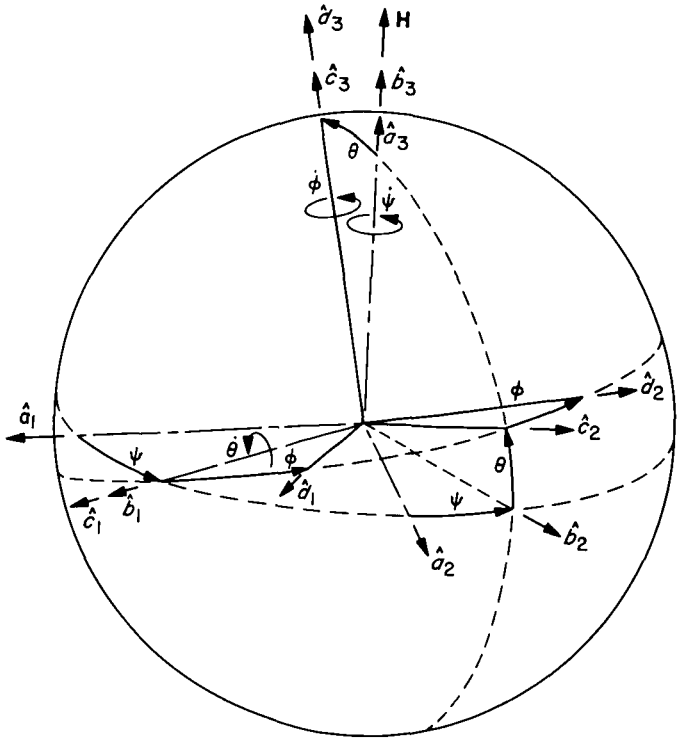

Fig. C-5. Unit vector relationships

Since $\hat{\mathbf{c}}_1$, $\hat{\mathbf{c}}_2$, $\hat{\mathbf{c}}_3$ also parallel principal axes of the symmetric body, the angular momentum may be written

$$\mathbf{H} = I_1\dot{\psi}\sin\theta\hat{\mathbf{c}}_2 + I_3\,(\dot{\phi} + \dot{\psi}\cos\theta)\,\hat{\mathbf{c}}_3$$

The dot product of $\hat{\mathbf{b}}_2$ and $\mathbf{H}$ (or $H\hat{\mathbf{a}}_3$ or $H\hat{\mathbf{b}}_3$) is zero, so

$$\mathbf{H}\cdot\hat{\mathbf{b}}_2 = I_1\dot{\psi}\sin\theta\cos\theta - I_3\,(\dot{\phi} + \dot{\psi}\cos\theta)\sin\theta = 0$$

from which it follows, for nonzero θ, that

$$\dot{\psi}\cos\theta\,(I_1 - I_3) = I_3\dot{\phi}$$

or

$$\dot{\phi} = \left[\left(\frac{I_1}{I_3} - 1\right)\cos\theta\right]\dot{\psi} \qquad \text{(C-18)}$$

From (C-17) and C-18) it follows that

$$\boldsymbol{\omega} = \dot{\psi}\sin\theta\hat{\mathbf{c}}_2 + \dot{\psi}\cos\theta\left(\frac{I_1}{I_3}\right)\hat{\mathbf{c}}_3 \qquad \text{(C-19)}$$

If the body ellipsoid is prolate, $I_3 < I_1$, and $\dot{\phi}$ and $\dot{\psi}$ are of the same sign. Thus the angular velocity vector must lie between the angular momentum vector and the $\hat{\mathbf{d}}_3$ vector of body symmetry. This is evident in Fig. C-3, which shows the body cone rolling outside of the space cone.

If the body ellipsoid is oblate, however, two alternatives emerge, as shown in Figs. C-4a and C-4b. In either case, $\dot{\phi}$ and $\dot{\psi}$ must be of opposite sign, as indicated by (C-18). If $\dot{\phi}$ is negative and $\dot{\psi}$ positive, the angular velocity has a positive component along $\hat{\mathbf{c}}_2$ (from C-19), so Fig. C-4a prevails. But if $\dot{\phi}$ is positive, so that $\dot{\psi}$ is negative, $\boldsymbol{\omega}$ has a negative component along $\hat{\mathbf{c}}_2$, which is the result illustrated by Fig. C-4b.

The apex angles of the cones shown in Figs. C-3 and C-4 are not independent; although the angle of any one cone in a figure can be established arbitrarily by the selection of appropriate initial conditions, the angle of the second cone will then be determined by the ratio of moments of inertia of the body. Specifically, if β is the half angle of the body-fixed cone, and θ the angle between the body axis $\hat{\mathbf{d}}_3$ and the angular momentum vector $\mathbf{H}$ (so that θ is the Euler nutation angle), this relationship is given by

$$\tan\beta/\tan\theta = I_3/I_1 \qquad \text{(C-20)}$$

as can be determined for the three distinct symmetric cases by examination of Fig. C-6, in which ω_{12} is $(\omega_1^2 + \omega_2^2)^{1/2}$, the magnitude of the angular velocity component in the $\hat{\mathbf{c}}_2$ direction. From each of these sketches, it is evident that

$$\tan\beta = \frac{\omega_{12}}{\omega_3} \quad \text{and} \quad \tan\theta = \frac{\omega_{12}}{\dot{\psi}\cos\theta}$$

so that

$$\tan\beta/\tan\theta = \dot{\psi}\cos\theta/\omega_3$$

Equation (C-19) indicates that

$$(I_1/I_3)\,\dot{\psi}\cos\theta = \omega_3$$

which, with the above, establishes the result (C-20).

Extension for the asymmetric case of relationships between body-cone half angle β and nutation angle θ is complicated by the fact that neither of these angles is constant for a given polhode (i.e., for a given motion). It is evident from Fig. C-2 that β varies between upper and lower limits, which will be called β_u and β_l, respectively. The corresponding limits in θ are θ_u and θ_l. When the pole is in any of the principal axis planes of the body, β and θ are extremal, so $\dot{\beta}$ and $\dot{\theta}$ are zero. In this situation, $\mathbf{H}$, $\boldsymbol{\omega}$, and the axis of nominal spin are coplanar. Figures corresponding exactly to those in Fig. C-6 (for the symmetric body) can be drawn for the asymmetric case when θ and β are extremal, so simple relationships such as (C-20) can be constructed for the asymmetric case also. Consider for example the special case in which the 3-axis is the nominal axis of spin, and $I_1 < I_2 < I_3$ (such a case is shown in Fig. C-2 if one considers a polhode in the upper portion of the ellipsoid). When β and θ are maximal, the pole is in the $\hat{\mathbf{d}}_3$, $\hat{\mathbf{d}}_2$ plane, and so also are $\mathbf{H}$ and $\boldsymbol{\omega}$. A sketch of $\mathbf{H}$, $\boldsymbol{\omega}$, $\hat{\mathbf{d}}_3$, θ_u, and β_u now appears exactly as in C-6b or C-6c (depending on initial conditions), with notation changed from ω_{12} to ω_2 and subscripts u added to θ and β. Consequently, as previously, it follows that

$$\tan\beta_u/\tan\theta_u = \dot{\psi}\cos\theta/\omega_3$$

Because $\dot{\theta}$ is instantaneously zero, equations (C-17)–(C-19) remain valid if I_1 is changed to I_2 and it is recognized that $\hat{\mathbf{c}}_2$ is $\hat{\mathbf{d}}_2$ for the instant. Thus it follows that

$$(I_2/I_3)\,\dot{\psi}\cos\theta_u = \omega_3$$

which leads to the conclusion that

$$\tan\beta_u/\tan\theta_u = I_3/I_2 \tag{C-21}$$

Consideration of the geometry of minimal θ and β leads similarly to

$$\tan\beta_l/\tan\theta_l = I_3/I_1 \tag{C-22}$$

It has remained convenient to consider the 3-axis as the nominal spin axis, so that the Euler angles shown in Fig. C-5 remain appropriate. It should be noted, however, that when one is considering polhodes around the 1-axis in Fig. C-2, it is more convenient to abandon the Euler angle set in Fig. C-5 in favor of a set for which $\hat{\mathbf{a}}_1$, not $\hat{\mathbf{a}}_3$, is aligned with the angular momentum vector $\mathbf{H}$. Then θ becomes the angle between $\mathbf{H}$ and $\hat{\mathbf{d}}_1$, and for polhodes around the 1-axis θ varies between upper and lower limits as before. Again θ is maximal when the pole is in the

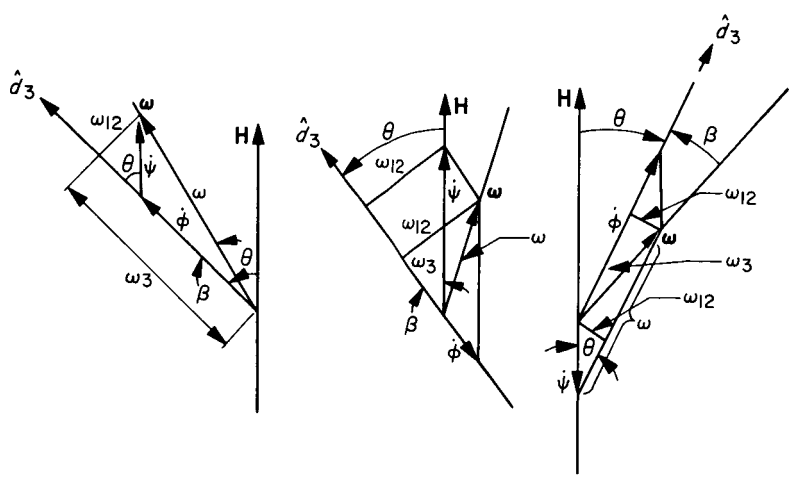

Fig. C-6. Sketches for relating cone angles

plane of the nominal spin axis and the axis of intermediate moment of inertia (d_2 in Fig. C-2); so to obtain the analogs of (C-21) and (C-22), for this case, the subscripts 1 and 3 are simply reversed.

Recognition of these relationships between the various angles β and θ is useful in Section IV, in which the ideas in this appendix are extended to rigid bodies losing kinetic energy through an "energy sink."

APPENDIX D

Idealized Examples Counter to Stability Criterion for Flexible, Dissipative Bodies

The proposition that free, flexible, dissipative bodies can perform stable uniform rotations only about inertially fixed axes of maximum moment of inertia is dependent in its "proof" upon the premise that such a body can have changing orientation in space without relative motion of its parts only if the angular velocity vector of the body parallels a principal axis.

Although this premise may be valid in application to physical systems, it is evidently invalid for the two idealized systems cited below. As these are reasonable models of spacecraft with flexibility and damping, their mention here may serve to guide the analyst in his mathematical idealization process and the designer in his conception of damper designs.

Consider a system comprised of two rigid symmetric bodies with identical ratios of axial to transverse moment of inertia, assembled as in Fig. D-1, with one body housed within a cavity of the other, and with centroids coincident. If the connecting medium between the two bodies offers resistance to relative angular displacement and also to relative angular velocity of the two bodies, this constitutes an idealized flexible dissipative system. As the bodies are inertially matched, however, they can each independently perform identical Poinsot motions, spinning and precessing at the same rates and at the same nutation angle. Evidently, then, this system as a whole can execute that motion, and thus move as a rigid body in Poinsot motion, violating the premise. Although it does not follow necessarily that this idealized system violates the stability criterion, this has been established by E. L. Marsh in unpublished research at Stanford, with the assumption that the connecting medium provides restoring torques both linearly elastic and viscous.

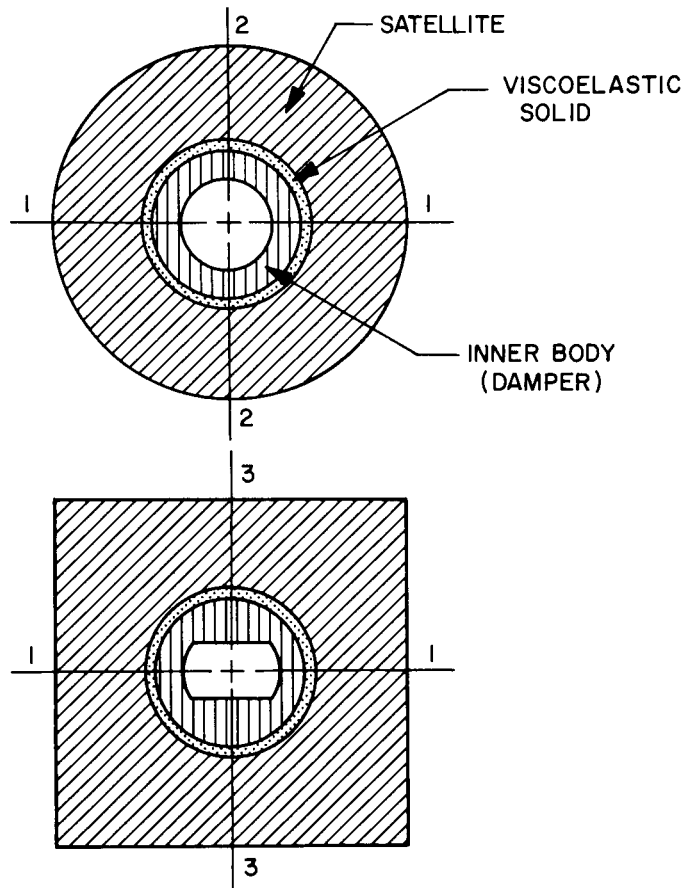

Fig. D-1. Idealized flexible dissipative body 1

A second counter-example, illustrated in Fig. D-2, consists of two rigid cylindrical pistons so constrained that they can only translate symmetrically along the axis of revolution of the enclosing rigid cylindrical housing. The pistons are connected by springs to the ends of the housing

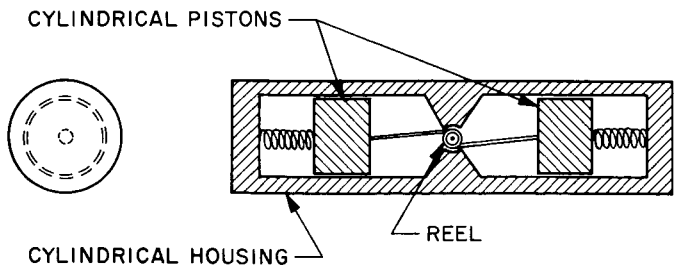

Fig. D-2. Idealized flexible dissipative body 2

cylinder, and the central reel in the figure is constrained by a torsion spring. Separate wires connect the pistons to the reel, so that as the reel turns against the torsion spring the pistons move equal distances away from the system mass center, which remains at the center of the reel. Energy is dissipated by sliding friction or by viscous dashpots added to the piston springs in parallel.

If this system is initially spinning about its axis of symmetry (which is the axis of minimum moment of inertia), and a general perturbation is imposed, the pistons will commence to oscillate relative to the housing, and energy will be dissipated. It does not follow, however, that this flexible, dissipative body must eventually tumble about a transverse axis (the minimum energy state), because there exists the possibility that the system will settle down to a state of steady spin and precession, with no nutation and hence no forcing of oscillations of the pistons. This possibility is in violation of the premise that relative motion must result from any motion of a nonrigid body other than spin about a principal axis.

In support of this possibility, it can be shown that the equations of motion for deviations from spin at rate Ω about the longitudinal axis (called the 3-axis) can be written

$$\dot{\omega}_1 [I_1 + 2X(2R + X)] - \omega_2 (\Omega + \omega_3) \times [I_1 - I_3 + 2mX(2R + X)] + 4m\omega_1 \dot{X}(R + X) = 0 \tag{D-1}$$

$$\dot{\omega}_2 [I_1 + 2X(2R + X)] - (\Omega + \omega_3)\omega_1 \times [I_3 - I_1 - 2mX(2R + X)] + 4m\omega_2 \dot{X}(R + X) = 0 \tag{D-2}$$

$$\dot{\omega}_3 = 0 \tag{D-3}$$

$$m\ddot{X} + c\dot{X} + [k - m(\omega_1^2 + \omega_2^2)]X = mR(\omega_1^2 + \omega_2^2) \tag{D-4}$$

where

$$I_1 = I_1^H + 2I_1^P + 2mR^2$$

$$I_3 = I_3^H + 2I_3^P + 2mR^2$$

with I_3^H and I_1^H the moments of inertia of the housing cylinder about centroidal longitudinal and transverse axes, respectively, and I_3^P and I_1^P the corresponding moments of inertia of one of the pistons. In these equations, m is the mass of a piston, R is the radial distance from the center to a piston in its equilibrium state for a system at rest, X is the displacement of the piston from this position, and ω_1, ω_2, ω_3 are the deviations from the initial state in the angular velocity measure numbers along body-fixed principal axes.

Hence ω_1, ω_2, ω_3 and X are all arbitrarily small after an infinitesimal perturbation. Linearizing in these terms produces an uncoupled set of equations which can be recognized as the Euler equations for the undeformed body and, separately, the equation of a damped oscillator. Under the assumption of linear viscous damping, these linearized equations appear as below.

$$\dot{\omega}_1 I_1 - \Omega\omega_2 (I_1 - I_3) = 0 \tag{D-5}$$

$$\dot{\omega}_2 I_1 + \Omega\omega_1 (I_1 - I_3) = 0 \tag{D-6}$$

$$\dot{\omega}_3 = 0 \tag{D-7}$$

$$m\ddot{X} + c\dot{X} + kX = 0 \tag{D-8}$$

Evidently equations (D-5)–(D-7) are satisfied by the classical Poinsot motion of a free rigid body (spin plus steady precession), and the solution of (D-8) is a damped oscillation. This conclusion is supported by the observation that the original nonlinear equations (D-1)–(D-4) are satisfied by steady spin and precession (so $\omega_1^2 + \omega_2^2$ is constant), with

$$X = \frac{mR(\omega_1^2 + \omega_2^2)}{k - m(\omega_1^2 + \omega_2^2)}$$

a constant.

It should be acknowledged that, as the stability established above for spin about a principal axis of minimum moment of inertia is not wholly asymptotic, this is formally infinitesimal stability, and not Lyapunov stability. This seems, however, a sufficient basis for the claim that this system is probably another counter-example to the general stability proposition for flexible, dissipative bodies.

APPENDIX E

Matrix Derivation for Modal Method

In this appendix the equations of motion appearing in the text of this report as Eq. (106) are derived by the use of a matrix or tensor formulation from the outset; the matrix equation (106) was constructed by recasting in matrix form equations derived in vector-scalar notation. The two derivations are independent and consistent, so that confidence in the result (106) is compounded.

As previously, the final result is built up of equations obtained by direct application of D'Alembert's principle (now in matrix form) to the individual sub-bodies A_i. (The subscript or superscript i is omitted in the following, but it should be remembered that these equations apply individually to the elementary bodies A_i.)

The force equation $\{F\} + \{F\}' = 0$ is identical in vector and column-matrix form. In matrix expansion, this becomes, in vector basis $\hat{\mathbf{b}}_1$, $\hat{\mathbf{b}}_2$, $\hat{\mathbf{b}}_3$ fixed in $\tilde{B}$,

$$\{F\} - [m]\{a\} = 0 \tag{E-1}$$

where $\{a\}$ is the inertial acceleration of the mass center P_i, and $[m]$ is the mass matrix of body A_i (so in most cases $[m] = m_i[E]$, where $[E]$ is the identity matrix).

The inertial acceleration $\{a\}$ is given by the time derivative (in inertial space) of the inertial velocity $\{v\}$ of P_i, so

$$\{a\} = \{\dot{v}\} + [\tilde{\omega}]\{v\} \tag{E-2}$$

and

$$\{v\} = \{\dot{p}\} + [\tilde{\omega}]\{p\} \tag{E-3}$$

where $\{p\}$ is the position vector to P_i from an inertially fixed point, dot indicates that the elements of the matrix are time-differentiated, and $[\tilde{\omega}]$ is the matrix of the tensor of the angular velocity of A_i in $\tilde{B}$ (see Eq. 111). Note that multiplication by this matrix is equivalent to cross-multiplication by the corresponding angular velocity vector, so the operations shown above represent the familiar rules for differentiation.

Thus $\{a\}$ becomes

$$\begin{aligned}\{a\} &= \{\ddot{p}\} + [\dot{\tilde{\omega}}]\{p\} + [\tilde{\omega}]\{\dot{p}\} + [\tilde{\omega}]\{\dot{p}\} + [\tilde{\omega}][\tilde{\omega}]\{p\} \\ &= \{\ddot{p}\} + [\dot{\tilde{\omega}}]\{p\} + 2[\tilde{\omega}]\{\dot{p}\} + [\tilde{\omega}][\tilde{\omega}]\{p\}\end{aligned} \tag{E-4}$$

which when substituted into (E-1) provides an equation equivalent to (103) and its cyclic permutations, as can be shown by expansion.

All remaining equations in the final result (106) follow from the application of D'Alembert's principle to the torques on individual bodies A_i. Thus the expression

$$\{T\} + \{T\}' = 0 \tag{E-5}$$

becomes, in vector basis $\langle\hat{\mathbf{b}}_1, \hat{\mathbf{b}}_2, \hat{\mathbf{b}}_3\rangle$, the required ingredient.

The inertial torque $\{T\}'$ in vector basis $\langle\hat{\mathbf{b}}_1, \hat{\mathbf{b}}_2, \hat{\mathbf{b}}_3\rangle$ can be obtained by transforming this torque from vector basis $\langle\hat{\mathbf{a}}_1, \hat{\mathbf{a}}_2, \hat{\mathbf{a}}_3\rangle$. The latter can be obtained simply from Euler's dynamical equations in matrix form. If $\{T\}'_A$ represents this inertia torque in basis $\langle\hat{\mathbf{a}}_1, \hat{\mathbf{a}}_2, \hat{\mathbf{a}}_3\rangle$, it may be written

$$\{T\}'_A = -[I]\{\dot{\omega}^A\} - [\tilde{\omega}^A][I]\{\omega^A\} \tag{E-6}$$

where $[I]$ is the matrix of the inertia tensor, so it is diagonal above, in basis $\langle\hat{\mathbf{a}}_1, \hat{\mathbf{a}}_2, \hat{\mathbf{a}}_3\rangle$, and $\{\omega^A\}$ is the angular velocity of A in an inertial reference frame N and in basis $\langle\hat{\mathbf{a}}_1, \hat{\mathbf{a}}_2, \hat{\mathbf{a}}_3\rangle$. As previously, the tilde ($\sim$) indicates the skew-symmetric matrix constructed from the vector implied by the symbol, so that $[\tilde{\omega}^A]$ is constructed from the elements of $\{\omega^A\}$ by the rule exemplified in (111).

The angular velocity of A in N is most conveniently treated as the sum of the angular velocity of A in B (called $\{\Omega\}$ here in basis $\langle\hat{\mathbf{a}}_1, \hat{\mathbf{a}}_2, \hat{\mathbf{a}}_3\rangle$)and that of B in N (called $\{\omega\}$ in basis $\langle\hat{\mathbf{b}}_1, \hat{\mathbf{b}}_2, \hat{\mathbf{b}}_3\rangle$). Thus, these useful angular velocities appear in expanded form as

$$\{\Omega\} = \begin{Bmatrix}\dot{\theta}_1\\ \dot{\theta}_2\\ \dot{\theta}_3\end{Bmatrix} \quad \text{and} \quad \{\omega\} = \begin{Bmatrix}\omega_1\\ \omega_2\\ \omega_3\end{Bmatrix} \tag{E-7}$$

In order to sum these two to replace $\{\omega^A\}$, they must both be written in basis $\langle\hat{\mathbf{a}}_1, \hat{\mathbf{a}}_2, \hat{\mathbf{a}}_3\rangle$. As can be confirmed by inspection of Fig. 11 or Eq. (61), transformation from basis $\langle\hat{\mathbf{b}}_1, \hat{\mathbf{b}}_2, \hat{\mathbf{b}}_3\rangle$ to basis $\langle\hat{\mathbf{a}}_1, \hat{\mathbf{a}}_2, \hat{\mathbf{a}}_3\rangle$ is accomplished by premultiplying with the transformation matrix $[\Theta]$, where in the linear approximation

$$[\Theta] = \begin{bmatrix} 1 & \theta_3 & -\theta_2 \\ -\theta_3 & 1 & \theta_1 \\ \theta_2 & -\theta_2 & 1 \end{bmatrix} \tag{E-8}$$

Thus one may write for $\{\omega^A\}$

$$\{\omega^A\} = \{\Omega\} + [\Theta]\{\omega\} \tag{E-9}$$

or, with the symbol $\{\omega_A\}$ representing the angular velocity $\{\omega\}$ in the $\langle \hat{\mathbf{a}}_1, \hat{\mathbf{a}}_2, \hat{\mathbf{a}}_3 \rangle$ basis,

$$\{\omega^A\} = \{\Omega\} + \{\omega_A\} \tag{E-10}$$

The corresponding tensor matrix then becomes

$$[\tilde{\omega}^A] = [\tilde{\Omega}] + [\tilde{\omega}_A] \tag{E-11}$$

and the inertia torque expression (E-6) appears in expanded form as

$$\begin{aligned}\{T\}'_A = &- [I]\{\dot{\Omega}\} - [I][\dot{\Theta}]\{\omega\} \\ &- [I][\Theta]\{\dot{\omega}\} - [\tilde{\Omega}][I]\{\Omega\} \\ &- [\tilde{\Omega}][I][\Theta]\{\omega\} - [\tilde{\omega}_A][I]\{\Omega\} \\ &- [\tilde{\omega}_A][I][\Theta]\{\omega\}\end{aligned} \tag{E-12}$$

There appear above certain terms which would represent, in expansion, higher-degree terms in the small rotations θ_i, $i = 1, 2, 3$. Dropping most of these terms produces the following partially linearized form of the inertia torque in the $\langle \hat{\mathbf{a}}_1, \hat{\mathbf{a}}_2, \hat{\mathbf{a}}_3 \rangle$ basis:[20]

$$\begin{aligned}\{T\}'_A = &- [I]\{\dot{\Omega}\} - [I][\dot{\Theta}]\{\omega\} - [I][\Theta]\{\dot{\omega}\} \\ &- [\tilde{\Omega}][I]\{\omega\} - [\tilde{\omega}][I]\{\Omega\} \\ &- [\tilde{\omega}_A][I][\Theta]\{\omega\}\end{aligned} \tag{E-13}$$

Transformation to the basis $\langle \hat{\mathbf{b}}_1, \hat{\mathbf{b}}_2, \hat{\mathbf{b}}_3 \rangle$ now requires premultiplication by $[\Theta]^{-1}$, the inverse of $[\Theta]$ (which is by virtue of orthogonality also its transpose). With appropriate deletion of clearly nonlinear terms, the inertia torque in the required basis is

$$\begin{aligned}\{T\}' = &- [I]\{\dot{\Omega}\} - [I][\dot{\Theta}]\{\omega\} - [\Theta]^{-1}[I][\Theta]\{\dot{\omega}\} \\ &- [\tilde{\Omega}][I]\{\omega\} - [\tilde{\omega}][I]\{\Omega\} \\ &- [\Theta]^{-1}[\tilde{\omega}_A][I][\Theta]\{\omega\}\end{aligned} \tag{E-14}$$

This equation is not fully linearized, as it must be in final form. To facilitate further linearization, and to accomplish explicit expression in terms of the small variables θ_i, $i = 1, 2, 3$, the following relationships can be substituted:

$$\begin{aligned}[\Theta] &= [E] - [\tilde{\theta}] \\ [\Theta]^{-1} &= [E] + [\tilde{\theta}] \\ [\tilde{\Omega}] &= -[\dot{\Theta}] = [\dot{\tilde{\theta}}] \\ \{\Omega\} &= \{\dot{\theta}\} \\ \text{and} \quad \{\dot{\Omega}\} &= \{\ddot{\theta}\}\end{aligned}$$

$$[\tilde{\omega}_A] = [\tilde{\omega}] - \left[\widetilde{[\tilde{\theta}]\{\omega\}}\right] \tag{E-15}$$

With these substitutions and further linearization, (E-14) becomes

$$\begin{aligned}\{T\}' = &- [I]\{\ddot{\theta}\} + [I][\dot{\tilde{\theta}}]\{\omega\} - [I]\{\dot{\omega}\} + [I][\tilde{\theta}]\{\dot{\omega}\} \\ &+ [\tilde{\theta}][I]\{\dot{\omega}\} - [\dot{\tilde{\theta}}][I]\{\omega\} \\ &- [\tilde{\omega}][I]\{\dot{\theta}\} - [\tilde{\omega}][I]\{\omega\} \\ &+ [\tilde{\omega}][I][\tilde{\theta}]\{\omega\} + \left[\widetilde{[\tilde{\theta}]\{\omega\}}\right][I]\{\omega\} \\ &- [\tilde{\theta}][\tilde{\omega}][I]\{\omega\}\end{aligned} \tag{E-16}$$

Now the inertia torque expression is linearized in the scalar variables θ_i, $i = 1, 2, 3$, but in order for this result to be combined with the previous force equation (E-4) it is imperative that θ_i appear only in column matrices. Transformation of the above into this form is accomplished with the identities

$$[\tilde{\theta}]\{\omega\} = -[\tilde{\omega}]\{\theta\} \tag{E-17}$$

and similarly for symbols other than θ and ω (remember that this is the matrix form of the vector cross-product), and with the definition

$$[I]\{\omega\} \equiv \{h\} \tag{E-18}$$

so that $\{h\}$ is the angular momentum vector of the subject sub-body A_i within the accuracy required when the elements of $\{h\}$ are to be multiplied by terms of order θ_i and the product linearized in θ_i. Thus the fifth term in (E-16) may be expressed

$$+ [\tilde{\theta}][I]\{\dot{\omega}\} = + [\tilde{\theta}]\{\dot{h}\} = - [\dot{\tilde{h}}]\{\theta\} \tag{E-19}$$

For comparison, the last term in (E-16) is expanded to obtain

$$- [\tilde{\theta}][\tilde{\omega}][I]\{\omega\} = - [\tilde{\theta}]\{\dot{h}\} = [\dot{\tilde{h}}]\{\theta\} \tag{E-20}$$

[20]Note that when multiplied by terms of the order of magnitude of θ, such as $\{\Omega\}$, $\{\dot{\Omega}\}$ and $[\tilde{\Omega}]$, the term $[\Theta]$ becomes $[E]$, $[\tilde{\omega}A]$ becomes $[\tilde{\omega}]$, etc., in the linear approximation.

as a consequence of the consistent approximation from Euler's equations

$$[\tilde{\omega}]\,[I]\,\{\omega\} = [I]\,\{\dot{\omega}\} \tag{E-21}$$

Thus the fifth and last terms in (E-16) cancel. (This is a restatement of the result $T'_{Ai1} = T'_1$ in (69).)

The term in (E-16) for which reformulation in terms of θ is not routine is the tenth (next to last) term. Repeated use of the identity illustrated in (E-17) and the definition (E-19) shows that

$$\left[\widetilde{\overline{[\tilde{\theta}]\,\{\omega\}}}\right][I]\,\{\omega\} = \left[\widetilde{\overline{[\tilde{\theta}]\,\{\omega\}}}\right]\{h\} = -\,[\tilde{h}]\,[\tilde{\theta}]\,\{\omega\}$$
$$= [\tilde{h}]\,[\tilde{\omega}]\,\{\theta\} \tag{E-22}$$

Now expression (E-16) can be rewritten in the required form, noting the indicated cancellation of terms and the result (E-22), and applying (E-17) and (E-18) where appropriate. The result is

$$\begin{aligned}\{T\}' = &-[I]\,\{\ddot{\theta}\} - [I]\,[\tilde{\omega}]\,\{\dot{\theta}\} - [I]\,\{\dot{\omega}\} - [I]\,[\tilde{\dot{\omega}}]\,\{\theta\}\\ &+ [\tilde{h}]\,\{\dot{\theta}\} - [\tilde{\omega}]\,[I]\,\{\dot{\theta}\} - [\tilde{\omega}]\,[I]\,\{\omega\}\\ &- [\tilde{\omega}]\,[I]\,[\tilde{\omega}]\,\{\theta\} + [\tilde{h}]\,[\tilde{\omega}]\,\{\theta\}\end{aligned} \tag{E-23}$$

When the inertia torque in (E-23) is substituted into the D'Alembert equation (E-5), the resulting equation can be shown by tedious expansion to be equivalent to (104). Thus the matrix expressions (E-4) and (E-23), when substituted into equations of motion (E-1) and (E-5), provide the end result of this appendix, which is the independent matrix derivation of the scalar equations of motion (103) and (104). Results in this appendix can also be combined to provide agreement with the matrix equation of motion (106).

REFERENCES

1. Cesari, L., *Asymptotic Behavior and Stability Problems in Ordinary Differential Equations*, Academic Press, New York, 1963.
2. Haseltine, W. R., "Passive Damping of Wobbling Satellites: General Stability Theory and Example," *J. Aerospace Sci.* 29, 543–550, 1962.
3. Newkirk, H. L., Haseltine, W. R., and Pratt, A. V., "Stability of Rotating Space Vehicles," *Proc. IRE*, 48, 743–750, 1960.
4. Kuebler, M. E., *Gyroscopic Motion of an Unsymmetrical Satellite Under No External Forces, TN D-596*, NASA, Washington, D.C., 1960.
5. Williams, D. D., "Torques and Attitude Sensing in Spin-Stabilized Synchronous Satellites," *Torques and Attitude Sensing in Earth Satellites*, S. F. Singer, ed., Academic Press, New York, 1964, pp. 159–174. (Also presented at the Goddard Mem. Symp. of the AAS in Washington, D.C., March 16, 17, 1962.)
6. Perkel, H., "Tiros I Spin Stabilization," *Astronautics*, 5, 38–39 and 106, June, 1960.
7. Goldstein, H., *Classical Mechanics*, Addison-Wesley, Reading, Mass., 1959.
8. Thomson, W. (Lord Kelvin), and Tait, P. G., *A Treatise on Natural Philosophy*, Cambridge University Press, Cambridge, Vol. I, Part I, 1879, and Vol. I, Part II, 1883.
9. Euler, L., *Proceedings of the Prussian Royal Academy*, 1750.

REFERENCES (Cont'd)

10. Euler, L., *Mémoires de Berlin,* 1758.

11. Poinsot, H., *Théorie Nouvelle de la Rotation des Corps, Paris,* 1834 (also in *Journal de Liouville,* tom XVI, 1851).

12. Jacobi C. G. J., *Journal für Math.* XXXIX, 1849, p. 293.

13. Pilkington, W. C., Vehicle Motions as Inferred from Radio Signal Strength Records, *External Publication No. 551,* Jet Propulsion Laboratory, Pasadena, September 5, 1958 (Appendix C).

14. Bracewell, R. N., and Garriott, O. K., "Rotation of Artificial Earth Satellites," *Nature,* 182, 760–762, September 20, 1958.

15. Hurty, W. C., and Rubinstein, M. F., *Dynamics of Structures,* Prentice-Hall, Englewood Cliffs, N. J., 1964.

16. Fearnow, D. A., Investigation of the Structural Damping of a Full-Scale Airplane Wing. *TN 2594,* NACA, Washington, D. C., 1951.

17. Reiter, G. S., and Thomson, W. T., "Rotational Motion of Passive Space Vehicles," *Torques and Attitude Sensing in Earth Satellites,* S. F. Singer, ed., Academic Press, New York, 1964. (Also presented at the Goddard Mem. Symp. of the AAS in Washington, D. C., March 16, 17, 1962.)

18. Thomson, W. T., and Reiter, G. S., Motion of an Asymmetric Spinning Body with Internal Dissipation, Report EM 13-9, TRW Systems, Redondo Beach, Calif., 1963.

19. Armstrong, R. S., Errors Associated with Spinning-up and Thrusting Symmetric Rigid Bodies, Technical Report 32-644, Jet Propulsion Laboratory, 1965.

20. Thomson, W. T., and Reiter, G. S., "Attitude Drift of Space Vehicles," *J. Astronaut. Sci.,* 7, 29-34, 1960.

21. Meirovitch, L., Attitude Stability of a Disk Subjected to Gyroscopic Forces, PhD. dissertation, UCLA, 1960.

22. Rogers, E. E., *A Mathematical Model for Predicting the Damping Time of a Mercury Damper,* Report IDP 565, U. S. Naval Ordnance Test Station, Pasadena, Calif., 1959.

23. Crout, P. D., *Theoretical Investigation of the Dynamic Behavior of the Mercury Damper, Report 8611,* Naval Weapons Station, China Lake, Calif.

24. Carrier, G. F., and Miles, J. W., "On the Annular Damper for a Freely Precessing Gyroscope," *J. Appl. Mech.,* 27, 237-240, 1960.

25. Fitzgibbon, D. P., and Smith, W. E., *Final Report on Study of Viscous Liquid Passive Wobble Dampers for Spinning Satellites, Report EM 11-14,* TRW Systems, Redondo Beach, Calif., 1961.

26. Miles, J. W., "On the Annular Damper for a Freely Precessing Gyroscope-II, *J. Appl. Mech.,* 30, 189-192, 1963.

27. Nauman, R. J., "An Investigation of the Observed Torques Acting on Explorer XI," *Torques and Attitude Sensing in Earth Satellites,* S. F. Singer, ed., Academic Press, New York, 1964. (Also presented at the Goddard Mem. Symp. of the AAS in Washington, D. C., March 16, 17, 1962.)

REFERENCES (Cont'd)

28. Alper, J. R., "Analysis of Pendulum Damper for Satellite Wobble Damping," *J. Spacecraft and Rockets*, 2, 50-54, 1965.

29. Haseltine, W. R., "Nutation Damping," *Aerospace Engineering*, 10, 10-17, March 1962.

30. Taylor, R. S., *A Spring-Mass Damper for a Spin-Stabilized Satellite*, Report EM 11-15, TRW Systems, Redondo Beach, Calif., 1961.

31. Perkel, H., "Space Vehicle Attitude Problems," *Advances in the Astronautical Sciences*, Vol. 4, 1958, pp. 173–192.

32. Wadleigh, K. H., Galloway, A. J., and Mathur, P. N., "Spinning Vehicle Nutation Damper," *J. Spacecraft and Rockets*, 1, 588-592, 1964.

33. Bracewell, R. N., "Satellite Rotation," *Advances in the Astronautical Sciences*, Vol. 4, 1958, pp. 317–328.

34. Beletskii, V. V., and Zonov. Yu. V., "Rotation and Orientation of the Third Soviet Satellite," *Artificial Earth Satellites*, Kurnosova, ed., Vols. 7 and 8, English trans: Plenum Press, New York, 1962.

35. Leon, H. I., *Spin Dynamics of Rockets and Space Vehicles in Vacuum*, Report TR-59-0000-00787, TRW Systems, Redondo Beach, Calif., 1959.

36. Cartwright, W. F., Massinghill, E. C., and Trueblood, R. D., "Circular Constraint Nutation Damper," *AIAA J.*, 1, 1375-1380, 1963.

37. Zaroodny, S. J., and Bradley, J. W., *Nutation Damper, a Simple Two-Body Gyroscopic System*, Report 1128, Ballistic Research Laboratories, Aberdeen Proving Ground, Md., 1961.

38. Suddath, J. H., *A Theoretical Study of the Angular Motions of Spinning Bodies in Space*, TR R-83, NASA, Washington, D. C., 1961.

39. Gray, A., *A Treatise on Gyrostatics and Rotational Motion*, Dover, New York, 1959, p. 264 (first published in 1918).

40. Herzberg, G., *Molecular Spectra and Molecular Structure: II Infrared and Raman Spectra of Polyatomic Molecules*, Van Nostrand, Princeton, N.J., 1945.