https://ntrs.nasa.gov/search.jsp?R=19660021320 2018-05-25T16:29:37+00:00Z

APRIL 1966

GPO PRICE $ _____

CFSTI PRICE(S) $ _____

Hard copy (HC) 4.00

Microfiche (MF) .75

ff 653 July 65

# GEOS PRE-PROCESSING REPORT

prepared by

THE APPLIED SCIENCES DEPARTMENT
RESEARCH AND DEVELOPMENT CORPORATION
BLADENSBURG - MARYLAND

for

NATIONAL AERONAUTICS AND SPACE ADMINISTRATION

N66 30610 (ACCESSION NUMBER)
(THRU)
119 (PAGES)
1 (CODE)
CR-76228 (NASA CR OR TMX OR AD NUMBER)
08 (CATEGORY)
FACILITY FORM 602

# GEOS
# PRE-PROCESSING
# REPORT

National Aeronautics and Space Administration
Goddard Space Flight Center
Greenbelt, Maryland 20771 U. S. A.

Approved by Jerome D. Rosenberg
J. D. Rosenberg
GEOS Project Manager
NASA Headquarters

# GEOS
# PRE-PROCESSING
# REPORT

Prepared for

GODDARD SPACE FLIGHT CENTER
NATIONAL AERONAUTICS AND SPACE ADMINISTRATION

by

WOLF RESEARCH AND DEVELOPMENT CORPORATION
5801 Annapolis Road
Bladensburg, Maryland 20710

Contract NAS 5-9756-8A

Prepared by S. J. Moss
R. L. Brooks
E. Hyman

Reviewed by H. R. Kahler
H. R. Kahler
Manager, Applied Sciences Department

# GEOS PRE-PROCESSING REPORT


## Abstract

This report describes in detail the data acquisition and data reduction procedures of the instrumentation systems tracking the GEOS-A geodetic satellite. Its comprehensive scope includes the following information:

(1) The nature of the measurements made.

(2) The basic operation of each system and its calibration.

(3) The source and magnitude of the errors due to instrumentation.

(4) The processing procedures carried out on the data prior to its submission to the Geodetic Satellites Data Service.

## LIST OF CONTRIBUTORS

Anderle, R. J., U. S. Naval Weapons Laboratory

Bugnitz, J. A., Aeronautical Chart and Information Center

Carrion, W. J., Goddard Space Flight Center

Early, E., Army Map Service

Guier, W. H., Applied Physics Laboratory

Hadgigeorge, G., Air Force Cambridge Research Laboratory

Harris, D. W., Goddard Space Flight Center

Johnson, T. S., Goddard Space Flight Center

Kuykendall, H. L., Aeronautical Chart and Information Center

Martin, R. W., Smithsonian Astrophysical Observatory

Oosterhout, J. D., Goddard Space Flight Center

Premo, D. A., Goddard Space Flight Center

Rutscheidt, E., Army Map Service

San Lwin, G., Applied Physics Laboratory

Schürer, M., Universität Bern

Slama, C., Coast and Geodetic Survey

Taylor, Cmdr. E., Coast and Geodetic Survey

Table of Contents


Page

Introduction. . . . . 1

OPTICAL EXPERIMENTS . . . . . 3

Minitrack Optical Tracking System (MOTS). . . . . 4

Aeronautical Chart and Information Center's PC-1000 Cameras. . . . . 12

Smithsonian Astrophysical Observatory's Baker-Nunn Cameras. . . . . 19

Coast and Geodetic Survey's BC-4 Cameras. . . . . 29

Army Map Service's BC-4 Cameras. . . . . 43

GEOS A Tracking Equipment at the Astronomical Institute of the University of Bern, Switzerland. . . . . 45

ELECTRONIC EXPERIMENTS. . . . . 47

The Minitrack System as Used in GEOS. . . . . 48

Goddard Range and Range Rate (RARR) System. . . . . 64

Goddard Laser Experiment. . . . . 74

Army Map Service's SECOR Range Data. . . . . 80

Air Force Cambridge Research Laboratory Laser Experiment. . . . . 91

Navy Doppler Experiment. . . . . 94

## ILLUSTRATIONS


| | Page |
|---|---|
| Sweep Shutter Correction (Baker-Nunn Camera) | 23 |
| Baker-Nunn Station Locations | 27 |
| Main Electronic Elements of the Receiving and Phase Comparison System (Minitrack) | 50 |
| Antenna Baselines (Minitrack) | 58 |
| Planned Digital Ranging System (Goddard Laser) | 76 |
| Range Overlap (SECOR) | 83 |
| Range Servo Response (SECOR) | 87 |
| Block Diagram of Frequency and Timing Equipment in the Doppler Geodetic Satellites | 96 |
| Block Diagram of Frequency and Timing Equipment in the Tranet Ground Station | 97 |


## TABLES


| | Page |
|---|---|
| Programmed Shutter Action for C & GS BC-4 Cameras | 31 |
| Ranging Frequencies (Goddard RARR) | 65 |
| Carrier and Modulation Frequencies (SECOR) | 81 |
| Range Error Summary (SECOR) | 89 |

## ABBREVIATIONS

| | | |
|---|---|---|
| ACIC | - | Aeronautical Chart and Information Center |
| AFCRL | - | Air Force Cambridge Research Laboratory |
| AMS | - | Army Map Service |
| C & GS | - | Coast and Geodetic Survey |
| GSDS | - | Geodetic Satellites Data Service |
| GSFC | - | Goddard Space Flight Center |
| MOTS | - | Minitrack Optical Tracking System |
| RARR | - | Range and Range Rate |
| SAO | - | Smithsonian Astrophysical Observatory |
| SECOR | - | Sequential Estimation and Collation of Range |

## Introduction

This publication contains a description of the pre-processing to which observational data of the GEOS-A satellite has been subjected prior to its submission to the Geodetic Satellites Data Service of the NASA SCIENCE DATA CENTER. The pre-processed data from the participating instrumentation systems will be available to National Geodetic Satellite Program principal investigators and other qualified users through the G. S. D. S. so that the scientist endeavoring to recover geodetic information from the GEOS tracking data will have the benefit of all available data.

The purpose of this report is to furnish the scientist with the following information regarding each of the instrumentation systems:

1. The nature of the various measurements made;
2. The basic operation of each individual system and its hardware calibration;
3. The source and the best estimate of the magnitude and statistical properties of the errors in the data;
4. The processing procedures carried out on the raw data prior to its submission to the data depository with regard to
   a. Editing
   b. Filtering and smoothing
   c. Corrections
   d. Models used in data processing

Following the pre-processing report for each system is a list of references from which the pertinent information was derived. In many cases these references are not documents but rather verbal communication with cognizant participants in the various associated agencies.

# OPTICAL EXPERIMENTS

Minitrack Optical Tracking System (MOTS)

## I. General

The Minitrack Optical Tracking System, consists basically of the MOTS cameras located at 12 of the Space Tracking and Data Acquisition Network (STADAN) sites where they have been used in the calibration of the Minitrack interferometers. For GEOS this camera system has been augmented by 9 more cameras of the same type at selected locations in and around the eastern United States.

The MOTS cameras are equatorially mounted and sidereally driven by a synchronous motor with a precision 60 cycles. These cameras have a one meter focal length, an 8 inch aperture, and the lens, identical to that used in the PC-1000 cameras, has distortions less than $\pm$ 10 microns. The 8 x 10 inch glass plates coated with Kodak 103a-F and Royal X-PAN emulsion used in this camera cover a field of view of $11^\circ \times 14^\circ$. Exposures will normally run for 35 seconds, an adequate time to bring out stars of the ninth magnitude under normal seeing conditions.

## II. Plate Reduction

To date all MOTS photographic plates, including those derived from Project ANNA, have been reduced according to standard procedures as formulated for these particular cameras by Dr. Paul Herget of the University of Cincinnati Observatory. These procedures are described in the appendix which begins on page 8 of this MOTS report.

The output of the MOTS has been precise enough for the tasks assigned to it to date. It is felt with confidence that the mean value of the total error (random and systematic) in the resultant observations, geodetic questions aside, has been less than two seconds of arc. (See error discussion below.) Now, the GEOS project is aiming for greater tracking accuracies than before and those employing other camera systems, e.g., the BC-4's and PC-1000's, are contemplating observational accuracies of about 0.5 seconds of arc. Accordingly, steps are being taken to refine the MOTS plate reduction techniques. The precise form of these refinements, to be carried out by the Physical Science Laboratory of New Mexico State University with advice from Duane Brown Associates, Inc., will be decided upon by mid-November 1965. By March 1966 the Operations Evaluation Branch of the Goddard Space Flight Center will submit a report to replace this one that will detail the equations, procedures and expected accuracy of the MOTS observations under the GEOS program. Some of the contemplated changes are:

a. Use of the Smithsonian Astrophysical Observatory's star catalog as compiled and refined from earlier catalogs. This change will require programming of a star updating routine since the SAO catalog has dispensed with the precession and secular variation terms of the parent catalogs.

b. Additional star measurements. Typically thirty to forty distinct background stars have been measured on each plate to arrive at the least squares determination of the plate constants. If it can be shown that more stars will yield greater precision, then more will be measured.

c. Additional terms in the fitting function and possibly the inclusion of constants based on a careful calibration of each MOTS lens.

d. Explicit treatment of refraction to avoid inadequacy in the fitting function over the relatively wide field of view of the plate when low elevation shots are taken.

e. Incorporation of the comparator calibration curve into the reduction calculations.

## III. Accuracy

When the changeover in plate reduction procedure is completed, a reevaluation of accuracy will be made. Presently an accuracy of 1.5 seconds of arc rms can be demonstrated by using stars excluded from the plate solutions as test points. Three qualifications need to be added to this estimate of accuracy.

1. To the extent that there are errors in the catalog positions of the test stars the estimated error of 1.5 seconds of arc is a conservative estimate. For an estimation of catalog errors see reference 4.

2. To the extent that there are systematic star catalog errors affecting both test stars and solution stars alike the estimated 1.5 second of arc uncertainty is optimistic.

3. There are potential error sources in the photographing of the one millisecond pulse of GEOS-A that are not reflected in the above estimate of reduction accuracy. Star shimmer is averaged out by the sidereal drive system that, in effect, tracks the star over a 35 second period of time. Thus no shimmer error would be shown

in the star test points. On the other hand, the displacement by momentary atmospheric effects of the GEOS light pulse would result in an error that could not be compensated for in the plate reduction process. The magnitude of shimmer effects seems to be in debate.

A similar problem grows out of the question raised about the mechanical smoothness of the MOTS sidereal drive system. If there are either short or long term fluctuations in this drive, displacements of the satellite flashes will occur that are averaged out in the star positions. The magnitude of this problem has not been determined with certainty though experiments have been performed that tend to put an upper limit on the estimate of uncertainty due to mechanical drive of approximately 0.8 seconds of arc.

## IV. Timing

Because the MOTS camera is sidereally driven precise timing of observations of the stars is not critical. For the active satellite GEOS-A, flash times are provided by the Applied Physics Laboratory of the Johns Hopkins University. Estimated accuracy of flash times is 400 microseconds. The estimated accuracy of the MOTS shutter timing is approximately 0.75 seconds. However, a new shutter system with a timing accuracy of one millisecond and a capability of an exposure time of five milliseconds is currently being purchased for the MOTS cameras.

## Appendix

### Present Data Reduction Procedures for MOTS Camera Data

The relative positions of the satellite images to the adjacent star images are used to determine the position of the satellite at each light flash.

Preparation for Measurement - Knowing the location of the camera, its local hour angle and declination settings, and the time of the observation, the approximate right ascension and declination of the center of the plate is computed using standard formulas. The plate is then compared with an appropriate star chart (at the same scale) and 30 stars along the satellite trail and 10 additional outlying stars are selected and identified. The stars chosen are generally of 8th and 9th magnitude. This magnitude is desirable since the star image is small enough to be precisely measured, but yet bright enough to be catalogued. The star charts contain the BD and CD catalogue numbers and the star information is punched on cards for use in the data reduction stage. The star positions for the equator and equinox of 1950 are obtained from the Yale Zone Catalogs, the $AGK_2$ Catalogs, or the Cape Photographic Catalogs, depending on the zones covered. These catalogs contain the quantities necessary for updating these positions to the equator and equinox of the year of observation.

The approximate plate center is determined by the intersection of the two lines connecting opposite corners of the glass plate. This intersection is marked on the plate for later measurement.

Measurement - The plate is measured on a Model 422D Mann Comparator, equipped with a Telecomputing Dilog 632 system and an IBM summary punch for rapid recording of the measurements. The pre-marked

plate center is measured. Then five measurements are made on each star image and of each satellite image.

The arithmetic mean is used in the computations. Deviations of each measurement from the average rarely exceed 5 microns for an image of good definition. The measuring process requires an average time of 1 hour.

The catalog data for each star is updated to the year of observation. These computed apparent star positions are used to obtain standard coordinates ($\xi$ and $\eta$) by projecting the right ascension and declination coordinates onto a plane tangent to the celestial sphere at the point where the projected optic axis meets the sphere.

$$\begin{aligned} \xi &= \cos\delta \sin(\alpha - \alpha_c)/D \\ \eta &= \sin(\alpha - \alpha_c)/D - \sin\delta_c \cos\delta \left[\cos(\alpha - \alpha_c) - 1\right] /D \\ D &= \cos(\delta - \delta_c) + \cos\delta_c \cos\delta \left[\cos(\alpha - \alpha_c) - 1\right] \end{aligned} \quad (1)$$

where

$\alpha$ = right ascension of a star

$\delta$ = declination of a star

$\alpha_c$ = right ascension of the projected coordinate origin

$\delta_c$ = declination of the projected coordinate origin

These standard coordinates are combined with the measured coordinates to determine the plate constants (a, b, c, d, e, f) by the method of least squares.

$$\begin{aligned} \xi &= a + bx + cy + dxy + ex^2 + fx(x^2 + y^2) \\ \eta &= a' + b'x + c'y + d'xy + e'y^2 + f'y(x^2 + y^2) \end{aligned} \quad (2)$$

The determination of these parameters is based on the principle of over-determination so that the final results, based on 40 stars, are obtained by an adjustment process.

To test the validity of the plate constants, the $\xi$ and $\eta$ terms are recomputed using equations (2) above. These $\xi$ and $\eta$ terms are used to compute the corresponding $\alpha$ and $\delta$ values. These computed values

$$\alpha = \alpha_c + \tan^{-1}\left[\frac{\xi}{\cos\delta_c - \eta\sin\delta_c}\right]$$

$$\delta = \tan^{-1}\left[\frac{\sin\delta_c + \eta\cos\delta_c}{\cos\delta_c - \eta\sin\delta_c}\right] \qquad (3)$$

are compared with the precise positions for indications of erroneous data. These residuals are generally less than 2 sec. of arc, the mean value being less than $\pm$ 1 sec. of arc.

Any stars having residuals in declination exceeding 3 seconds of arc or residuals in right ascension exceeding 3 seconds of arc x secant ($\delta$) are rejected and the problem is rerun until a satisfactory solution is obtained. High residuals may be the result of measuring error, star catalog error, card punching errors, loss of image quality near the edge of the plate, emulsion shift, atmospheric shimmer, plate not being focus, or any combination of these factors.

Once the plate constants have been satisfactorially determined, standard coordinates for any measured satellite image can be found according to Eqs. (2). These in turn can be used to find the right ascension and declination of the satellite image according to Eqs. (3).

The plates are measured and the data is reduced at the Physical Science Laboratory, New Mexico State University, University Park, New Mexico.

## References


1. Good, E. W., Berbert J. H., Oosterhout, J. D., 1962, Reduction of the Minitrack Astrographic Plates: Photographic Science and Engineering 6 (6), pp. 324-327.

2. Oosterhout, J. D., Goddard Space Flight Center, Private Communication.

3. Veis, George, 1963, Optical Tracking of Artificial Satellites: Space Science Reviews, II, pp. 250-296.

4. Scott, F. P., 1963, Accuracy of Star Positions: U. S. Naval Observatory (unpublished).

5. San Lwin, Glen, Applied Physics Laboratory, Private Communication.

6. Harris, D. W., Goddard Space Flight Center, Private Communication.

Aeronautical Chart and Information Center's

PC-1000 Cameras

## I. Field Operations

Camera - The PC-1000 Photogrammetric Camera is used in the fixed mode. This camera has a 1000 mm. focal length, a 200 mm. aperture, and uses standard photogrammetric plates (190 x 215 x 6mm). Distortion is less than ± 10 microns. This camera is equipped with a pulse operated shutter, a VLF receiver, and a two-channel magnetic tape recorder to correlate shutter action and time. Camera reload time is generally 4 minutes.

Timing - The time is referenced to WWV (UT2), applying corrections for propagation delay, and is generally correct to ± 2 milliseconds.

Observations - Flashing-light satellites are generally observed, although the ACIC data reduction procedures are capable of handling passive satellite data. Orbital predictions are furnished by the Goddard Space Flight Center, Greenbelt, Maryland. These predictions contain look-angle data for each camera station in terms of azimuth , elevation angle, slant range, and flash time.

Prior to and after the satellite pass, stars are photographed with shutters opening and closing, resulting in trails of star images across the plate. The shutter is programmed to be open for exposures of 2.0, 1.0, 0.5, 0.3, and 0.1 seconds with the shutter closed for 20 seconds between each exposure. There are two such star trails for each of the pre and post-satellite observations, with the shutter closed for 40 seconds between the two trails. After the second "pre" star trail, and prior to the first "post" star trail, the shutter is opened for 1 minute to record the satellite flashes.

## II. Office Procedures

Measurement - A measurer selects 25 stars with good distribution and image quality in an area one inch on either side of the satellite path. He then clamps the plate onto the stage plate of a Mann Comparator and measures the fiducial mark in each corner and the satellite images. Then he selects the sharpest or best defined image in each of the four trails of each star to measure. The operator assigns an identification number to each image (total of 100 images for all 25 stars) to correlate the coordinate position with the time of exposure for that image.

Without moving the plate, another operator measures the same images (each operator requires three hours to measure the plate). The two independent measurements are compared for the same images, and if measurements differ more than four microns, those particular images are re-measured.

The Mann 422-F Comparators, equipped with a binocular viewing system, have a readout precision of one micron and have been calibrated by means of a least squares fit between the measured coordinates and the calibrated coordinates of a precision grid plate with 169 grid intersections. The standard deviation for this fit has been generally less than two microns. In addition, the comparators may be calibrated by measuring a conventional 250mm. glass scale with divisions at 1mm. intervals.

The ACIC has a Mann semi-automatic comparator on order. It will probably be in operation in November, 1965. It is anticipated that the semi-automatic comparator will eliminate the human error, reduce operator fatigue, and will reduce measuring time by two-thirds.

Data Reduction - The measurements of the two operators are averaged and then translated and rotated to a system in which the origin (near the principal point) is determined by the intersection of the two lines connecting fiducial measurements in opposite corners.

The Automatic Star Identification program is an iterative procedure on three parameters (azimuth, elevation, and roll) of the camera. This program makes a least squares adjustment to these parameters as supplied originally by the camera log. The new orientation parameters are then used to compute approximate right ascensions and declinations of star images from the measured coordinates by the implementation of direction cosines ( $\lambda$, $\mu$, $\gamma$ ).

$$\lambda_i = \sin \alpha_i \cos \eta_i \qquad \eta_i = \text{elevation angle}$$

$$\mu_i = \cos \alpha_i \cos \eta_i \qquad \alpha_i = \text{azimuth} \tag{1}$$

$$\gamma_i = \sin \eta_i$$

$$\lambda_i^2 + \mu_i^2 + \gamma_i^2 = 1,$$

where

$$\cos \alpha_i = \frac{\sin \delta p - \eta_2 \sin \varphi}{\cos \eta_2 \cos \varphi}$$

$$\sin \alpha_i = \frac{-\sin tp \cos \delta p}{\cos \eta_2}$$

$\delta p$ = stellar declination of $p^{\underline{th}}$ star

$\varphi$ = latitude of camera station

$\eta_2$ = elevation angle of camera

$tp$ = Local hour angle of star.

The approximate right ascension and declination values are used to identify each star in the Boss General Catalogue and/or the Smithsonian Astrophysical Observatory Catalogue. If the Smithsonian Astrophysical Observatory Catalogue is to be used to identify the stars, the Automatic Star Identification program requires the determination of three additional parameters. The precalibrated values for the elements of interior orientation Xp, Yp, c (principal point coordinates in image plane and principal distance) are enforced. Both star catalogues have been updated to the beginning of the year of observation and are stored on magnetic tape. The stars are identified by a computer "search" program to correlate approximate right ascensions and declination, within a pre-set tolerance. If a star can be identified, the star data (right ascension, declination, and proper motions) are determined.

Each identifiable star is then updated to the time of observation by means of the Besselian Day Numbers.

$$\begin{aligned} \alpha &= \alpha_0 + \tau\mu_a + Aa + Bb + Cc + Dd + E \\ \delta &= \delta_0 + \tau\mu_\delta + Aa' + Bb' + Cc' + Dd' \end{aligned} \qquad (2)$$

where

$\alpha_0$, $\delta_0$ is the mean place of the star for the beginning of a Besselian year.

$\tau$ is fraction of a tropical year

$\mu_a$, $\mu_\delta$ are proper motions

A, B, C, D, E are Besselian Day Numbers

$a = m/n + \sin\alpha_0 \tan\delta_0$ $\qquad$ $a' = \cos\alpha_0$

$b = \cos\alpha_0 \tan\delta_0$ $\qquad$ $b' = \sin\alpha_0$

$c = \cos \alpha_0 \sec \delta_0$ $\qquad$ $c' = \tan \epsilon \cos \delta_0 - \sin \alpha_0 \sin \delta_0$

$d = \sin \alpha_0 \sec \delta_0$ $\qquad$ $d' = \cos \alpha_0 \sin \delta_0$

$m/n = 2.29887 + 0.00237T$, where T is measured in centuries from 1900.0.

$\epsilon$ = obliquity of the ecliptic.

Refraction corrections (based on zenith distance, local temperature and pressure) convert the stellar positions from true to apparent. The celestial coordinates are then converted to direction cosines with respect to the local camera system.

Each image coordinate position (X, Y) generates the equations

$$\frac{X - Xp}{c} = \frac{A\lambda + B\mu + C\gamma}{D\lambda + E\mu + F\gamma}$$

$$\frac{Y - Yp}{c} = \frac{A'\lambda + B'\mu + C'\gamma}{D\lambda + E\mu + F\gamma} \qquad (3)$$

where

c is principal distance.

Xp, Yp are principal point coordinates in image plane.

A, B, C are direction cosines of X relative to X, Y, Z coordinate values of stellar image.

A', B', C' are direction cosines of Y relative to X, Y, Z.

D, E, F are direction cosines of Z relative to X, Y, Z. The Z axis is normal to the image plane.

These orientation parameters are determined by an iterative least squares adjustment. Prior to each iteration, both radial and non-radial (decentering) distortion corrections are applied to the plate coordinates. The amount of the correction for each is dependent upon the radial distance of the image from the principal point coordinates (Xp, Yp) which constitute two of the orientation parameters to be determined.

Star images with excessively large residuals are rejected, and the program is re-run. The typical standard plate coordinate error is less than 2.5 microns. Approximately 75 (minimum of 60) star images are used in the final adjustment. The remaining images are eliminated because the stars are not listed in the star catalog, or they have been rejected as a result of large residuals.

The satellite image coordinates are corrected for radial lens distortion, and a refracted right ascension and declination for it is computed based on the six parameters. Adjustments for refraction and diurnal abberation are then applied to obtain the apparent position.

The accuracy of the apparent positions is 0.6 to 0.8 seconds of arc or 3 to 4 microns at plate scale. The sources of random error in this processing may be star catalog data, measurement error, and error of flash time for the satellite. The sources of systematic error may be shutter delay, differential measuring bias, or catalog bias. The random error is considered to account for 75% of the total error.

The output is in the form of both punched cards and tabular listings and contains the following information:

a. Satellite designation

b. Observation number

c. Date and time of observation

d. Directions (azimuth and elevation) of satellite

e. Station number

f. Star catalog designation

g. Equator and equinox to which satellite position is referenced.

## References


1. H. M. Stationery Office, 1961, Explanatory Supplement to the Ephemeris: London, England.

2. Instrument Corporation of Florida, PC-1000 Photogrammetric Camera: Melbourne, Florida.

3. Kuykendall, H. L., 1965, Semi-Automatic Star Plate Measure: ACIC, St. Louis, Missouri.

4. Kuykendall, H. L., ACIC, Private Communication.

5. Bugnitz, J. A., ACIC, Private Communication.

6. Brown, D. C., 1957, A Treatment of Analytical Photogrammetry with Emphasis on Ballistic Camera Applications: RCA Data Reducation Technical Report No. 39.

Smithsonian Astrophysical Observatory's

Baker-Nunn Cameras

## I. Field Operations

Camera - The Smithsonian Astrophysical Observatory employs Baker-Nunn Cameras for satellite observations. This camera is a modified Super-Schmidt F/1, of 50 cm. focal length and 50 cm. aperture. The film is stretched under tension on a specially designed pyrex spherical surface. The field of view is 30° along the tracking axis and 5° along the perpendicular axis. A triaxial mount allows the camera to track along any circle with an angular velocity that can be varied from zero to two degrees per second. The Baker-Nunn camera may be operated in a stationary mode, tracking mode, or a combination of the two (oscillating mode). The film is processed at the camera station.

Observations - The photographs are made on a film 5.5 cm. wide and 30 cm. along the tracking axis. After each exposure the film is shifted 30 cm. to another unexposed strip of film. A film taken of a single satellite pass may have 20 to 50 such exposures. A clam shell capping shutter begins and terminates the exposure, which has various settings from 0.2 to 3.2 seconds. During the exposure, the trails of the stars and/or satellites are chopped by means of a barrel-type shutter. This barrel-type shutter rotates five times in front of the focal surface at a highly precise angular velocity. When the shutter is in the third break (of the five breaks), an electric contact strobes a flashing tube and records the time from a slave clock incorporated in the camera. This time record appears on the same film as the star and satellite images.

Timing - The time presentation on the photograph consists of the minute, second, and centisecond dial and of a one-inch oscilloscope screen for tenths of milliseconds. With the aid of precomputed tables, the photographed time is reduced from that of the center of the frame to the position of the satellite on the frame. This time is corrected by the amount of non-synchronization between the slave clock and the master clock (quartz crystal clock) at the station. This master clock in turn is referenced to WWV (UT2) which is then reduced to A. 1 time. The curve of A. 1 minus WWV emitted is extrapolated from the latest U. S. Naval Observatory values and the Bureau of Standards bulletins concerning the frequency offset of WWV. A time accuracy of $\pm$ one millisecond with respect to A. 1 time is maintained by this method.

## II. Office Procedures

Preparation for Measurement - The film frames, separated in time by three minutes, are scanned for image quality, the position of satellite on the plate, and proper slave clock and shutter calibrator presentations. Approximately 35% of observations are rejected at this point. A minimum of four measurable frames with no more than one unmeasurable frame between good frames is required. An average of seven frames is measured for each film from simultaneous observations.

For each frame to be measured, an input sheet for the computer program SI-PREP is prepared. This input consists of the satellite designation, date, time history tape, station coordinates, and sky conditions. The program computes the satellite position and selects a set of bright stars for identification purposes and a set of four stars in each quadrant for possible measurement.

These stars are selected from a tape of 258,997 stars which the SAO has compiled from all available catalogs of high positional accuracy. The Smithsonian Astrophysical Observatory catalog includes the following information for each star: right ascension and declination (epoch, equator, and equinox of 1950.0), standard deviation, annual proper motion, visual and photographic magnitude, Durchmusterung number, and source catalog.

If possible, all selected reference stars are within 20 mm. (2 degrees) of the satellite image. The star catalog data is automatically punched on cards at this time for later use.

Measurement - The measurer selects, on the basis of image quality, the best two stars from the four in each quadrant. They are identified and marked on the film for convenience in measurement. The measurements are made as follows:

| | | |
|---|---|---|
| a. | Satellite | 3 measurements of x and 3 of y |
| | Stars | 3 measurements of x and 3 of y |
| | Satellite | 3 measurements of x and 3 of y |

b. Rotate film 180° and repeat the measurements in (a).

c. Measure shutter calibrator (four positions on the film with one measurement per position).

The measuring time is 5-15 minutes per frame, depending upon quality of film and experience of the measurer. The Smithsonian Astrophysical Observatory currently has 32 measurers. They each measure for one to one and a half hours per day in one or two intervals.

The measurement is performed on five Mann, two-screw comparators (one model 422D and four model 829A's). Each of the five comparators utilizes a projection system in which the image being measured and the cross hairs are projected onto a screen. The SAO has one monocular microscope attachment which can replace the projection system on any of the four 829A comparators.

The comparators are calibrated yearly. If errors due to wear become significant, the comparator is returned to the factory for overhaul (relapping of lead screws, etc.). No calibration corrections are applied to the measurements.

Data Reduction - The measured star coordinates are collated with the catalog information for the stars. This is input to SI-ARP, the automatic reduction program along with the measured satellite coordinates and the time correction cards.

This program applies position corrections for the annual aberration of the reference stars (by Bessel's method). A sweep shutter correction is also computed that reduces the clock time recorded on the film to the instant of satellite observation (see figure 1).

## SWEEP SHUTTER CORRECTION

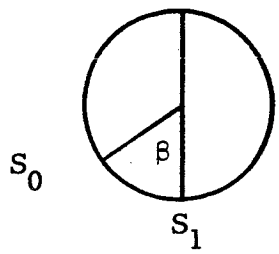


$$\Delta t = \frac{\beta}{2 \pi \omega} \qquad (1)$$

$S_0$ is point where rotating shutter intercepts the image of the satellite coming from the mirror of the camera.

$S_1$ is position of $S_0$ on the shutter at the time of presentation of the clock.

$\beta$ is angle at center of shutter between $S_0$ and $S_1$.

$\omega$ is angular speed of rotation of the shutter blade.

Figure 1.

The star positions, after annual aberration correction, are converted to standard coordinates ($\xi$ and $\eta$) by projecting the right ascension and declination coordinates onto a plane tangent to the celestial sphere at the point where the projected optic axis meets the sphere.

$$\xi = \frac{\cot \delta \sin (\alpha - A)}{\sin D + \cos D \cot \delta \cos (\alpha - A)}$$

$$\eta = \frac{\cos D - \cot \delta \sin D \cos (\alpha - A)}{\sin D + \cot \delta \cos D \cos (\alpha - A)} \tag{2}$$

where

$\alpha$, $\delta$ is right ascension and declination of a star.

A, D is right ascension and declination of intersection of celestial sphere with projected optic axis.

These standard coordinates are combined with the measured coordinates to determine the plate constants by the method of least squares. Each measurement generates the two equations:

$$\xi - x_i = ax_i + by_i + c$$

$$\eta - y_i = dx_i + ey_i + f \tag{3}$$

where

a, b, c, d, e, f are plate constants.

$$x_i = \frac{\text{x coordinate of measurement}}{\text{nominal focal length}}$$

$$y_i = \frac{\text{y coordinate of measurement}}{\text{nominal focal length}}$$

First-order corrections for the differential annual and diurnal aberrations and the differential refraction of the stars are implicitly included in the method of linear plate constants used in SI-ARP.

Once the plate constants are determined, standard coordinates ($\xi$ and $\eta$) for the measured satellite image can be determined by equations (3). These standard coordinates are converted into right ascension and declination for the satellite position by use of equations (2). The satellite position is referenced to the mean coordinates of the stars for equator and equinox 1950.0.

The Data Section of the Photoreduction Division examines the printed output. If a star measurement differs by more than 20 microns from the mean of those measurements, it is rejected and the data is re-run. If more than two stars are rejected in this manner, the film is remeasured. If the residual of a star after the least squares fit exceeds six seconds of arc, it is removed and the data is re-run. Six reference stars with a good distribution are required for acceptance of the result. Furthermore, if the standard deviation of the measured satellite position is greater than three seconds of arc, the film will be remeasured. The number of positions which ultimately fail to be reduced is less than 0.5%.

The results of simultaneous observation are subjected to a quadratic polynomial fit. If, after all corrections are made, a deviation is greater than six seconds of arc, the measurement is discarded.

As a last step prior to publishing the data, one month's accumulation of data for a satellite is fitted to an orbit in the DOI program. If the deviation in right ascension and declination of a computed position exceeds three times the standard deviation of the run, the data are examined, any corrections are applied, and the data are re-submitted for the SI-ARP Program. If an error cannot be found and corrected, the frame is remeasured. If the remeasured position continues to deviate

more than three times the standard deviation of the DOI run, the data are discarded. Less than one percent of computed positions are rejected at this point.

Final Results - As a result of fitting the computed satellite positions to an orbit in the DOI program, the position error is generally accepted to be $\pm$ two seconds of arc. Sources of random error are suspected to be measuring error, star catalog error, or emulsion distortion. Systematic errors may result from timing errors or measuring errors. The final results are on punch cards which contain the satellite identification, the computed position in right ascension and declination (referenced to equator and equinox of 1950.0), and the time in the A.1 system.

BAKER-NUNN STATION POSITIONS

| Station No. | Long. (E) | Lat. | Name |
|---|---|---|---|
| 9001 | 253°26'50."713 | 32°25'28."97 | Organ Pass, New Mexico |
| 9002 | 28 14 52. 723 | -25 57 39. 30 | Olifantsfontein, S. Africa |
| 9004 | 353 47 38. 205 | 36 27 48. 90 | San Fernando, Spain |
| 9005 | 139 32 06. 848 | 35 40 26. 60 | Tokyo, Japan |
| 9006 | 79 27 30. 338 | 29 21 32. 75 | Naini Tal, India |
| 9007 | 288 30 23. 755 | -16 27 55. 80 | Arequipa, Peru |
| 9008 | 52 31 12. 329 | 29 38 15. 64 | Shiraz, Iran |
| 9009 | 291 09 44. 449 | 12 05 28. 30 | Curacao, NWI |
| 9010 | 279 53 14. 130 | 27 01 18. 21 | Jupiter, Florida |
| 9011 | 294 53 39. 435 | -31 56 38. 98 | Villa Dolores, Argentina |
| 9012 | 203 44 25. 807 | 20 42 36. 01 | Maui, Hawaii |
| 9023 | 136 52 38. 975 | -31 23 30. 75 | Island Lagoon, Australia |

Table 1

## References


1. Veis, George, 1963, Optical Tracking of Artifical Satellites: Space Science Reviews, II, pp. 250-296.

2. Haefner, Richard R., 1965, The Precise Reduction of Baker-Nunn Films at the Smithsonian Astrophysical Observatory: SAO.

3. Lassovszky, Karoly, 1964, The Catalogue of Precise Satellite Positions: Smithsonian Astrophysical Observatory, Special Report No. 41.

4. Zadunaisky, Pedro E., 1964, Shutter Correction in Time for Baker-Nunn Camera: Smithsonian Astrophysical Observatory, Special Report No. 41.

5. Martin, Robert W., SAO, Private Communication.

6. Smart, W. M., 1962, Textbook on Spherical Astronomy: Cambridge Press, pp. 283-299.

7. Smithsonian Astrophysical Observatory, 1964, A Catalog of Positions and Proper Motions of 258,997 Stars for the Epoch and Equinox of 1950.0: Smithsonian Astrophysical Observatory, Special Report No. 151.

Coast and Geodetic Survey's

BC-4 Cameras

## I. Field Operations

Camera - The Wild BC-4 ballistic camera is used in the fixed mode. It has a focal length of 305 mm, an aperture of 117 mm, and a useful field of $33^\circ \times 33^\circ$. Camera reload time is generally four minutes.

Timing - A portable crystal clock is used to transport time from the master clock (a quartz crystal oscillator maintained by National Bureau of Standards at Beltsville, Md.) to each of the station clocks. The uncertainties in timing are: $\pm$ ten microseconds in the initial setting of the station clock, $\pm$ forty microseconds of accumulated uncertainties in the day-to-day records and $\pm$ one hundred microseconds in the jitter of the shutter. Periodic field trips are made with the portable clock to insure that these uncertainties are not exceeded.

The time of the station clock is recorded on paper tape with corresponding shutter commands and response. This paper tape is scaled in the office and corrections are applied to reference the observation times to the master clock. A final time correction, U. S. Naval Observatory correction for variations of earth orbit, is also applied in the office.

Observations - Orbital predictions are furnished weekly by the Goddard Space Flight Center, Greenbelt, Maryland. These predictions contain look-angle data for each camera station in terms of azimuth, elevation angle, slant range, and altitude at one minute intervals during the period the satellite is above the local horizon. The best time for observing all possible simultaneous two and three-station observations is selected taking into account optimum geometric considerations.

Prior to the satellite pass, stars are observed with shutters opening and closing to record time. The shutter timing is programmed and is dependent upon the declination of the area of the sky to be observed (Table 1). During the pass of a passive satellite the shutter is chopping every 0.2 seconds which results in approximately eight hundred images across the plate. For an active satellite, the shutter stays in an open position. After the passing of the satellite, stars are again photographed as before. By observing the stars both pre and post-satellite pass, the reduction of data will indicate whether or not the camera has moved during the observation. If movement occurs, the observation is rejected.

Both passive balloon-type (ECHO and PAGEOS) and active flashing-light (ANNA and GEOS) satellites are observed. There are presently eight camera stations. They will be moved as soon as sufficient simultaneous observations have been made to determine the desired ground positions. Approximately 50% of the observations are rejected due to poor image quality, timing errors, camera movements or other malfunction.

SHUTTER STATUS

| | Open | Closed | Trail Number |
|---|---|---|---|
| Declination 0° - 40° | 0.2 | 9.8 | 1 |
| | 8. sec. break | | |
| | 0.6 | 9.4 | 2 |
| | 8. sec. break | | |
| | 1.2 | 8.8 | 3 |
| | 8. sec. break | | |
| | 2.4 | 7.6 | 4 |
| | Satellite Pass | | |
| | 2.4 | 7.6 | 5 |
| | 8. sec. break | | |
| | 1.2 | 8.8 | 6 |
| | 8. sec. break | | |
| | 0.6 | 9.4 | 7 |
| | 8. sec. break | | |
| | 0.2 | 9.8 | |
| Declination 40° - 70° | 0.2 | 29.8 | 1 |
| | 10 sec. break | | |
| | 0.6 | 29.4 | 2 |
| | 10 sec. break | | |
| | 1.2 | 28.8 | 3 |
| | 10 sec. break | | |
| | 3.2 | 26.8 | 4 |
| | Satellite Pass | | |
| | 3.2 | 26.8 | 5 |
| | 10. sec. break | | |
| | 1.2 | 28.8 | 6 |
| | 10 sec. break | | |
| | 0.6 | 29.4 | 7 |
| | 10 sec. break | | |
| | 0.2 | 29.8 | 8 |

Table 1 - Programmed shutter action for Coast and Geodetic Survey's BC-4 observations. All times are in seconds. Each trail contains 5 images. Within one trail, all 5 images have the same exposure rates.

Table 1 (continued)

| | Open | Closed | Trail Number |
|---|---|---|---|
| Declination 70° - 90° | 0.2 | 29.8 | 1 |
| | 16 sec. break | | |
| | 1.2 | 88.8 | 2 |
| | 16 sec. break | | |
| | 3.2 | 26.8 | 3 |
| | Satellite Pass | | |
| | 3.2 | 26.8 | 4 |
| | 16 sec. break | | |
| | 1.2 | 88.8 | 5 |
| | 16 sec. break | | |
| | 0.2 | 29.8 | 6 |

## II. Office Procedures

Preparation for Measurement - Knowing the approximate location, altitude, and azimuth of the camera and time of the observation, the approximate right ascension and declination of the center of the plate is computed using standard formulas. The star plate is then compared with the appropriate star chart and seven stars with strong geometric relative positions are identified.

Star and satellite images are then correlated with time of exposure. The Local Sidereal Time is computed for the initial star and satellite images. Then computer programs compute the LST's for all succeeding image times and also compute the Independent Day Numbers for each star image time which will later be utilized to update the star position to time of the observation.

Measurement - A staff of 12 measurers using 4 Mann Comparators measure 150 stars, approximately 600 satellites images (if satellite is passive), 4 fiducial marks, and 8 drill holes. The plate is measured in both the 0° and 180° positions to compensate for differential measuring bias.

The 8 drill holes are drilled in the emulsion near the center of each of the 4 fiducial marks and midway between the fiducial marks along the sides of the plate. These drill holes can be measured with more precision than the images of the camera fiducials and are used as a basis for the initial plate coordinate system. These drill holes are measured at the beginning and end of each eight-hour shift and approximately at 2 1/2 hour intervals during that shift. In this manner, the plate may be removed and later replaced without losing the coordinate system. The time required to measure a plate is three, eight-hour shifts. Since only one person measures a plate (due to possible

differential bias between measurers), plate removal is necessary so that another operator on a different shift may measure his plate on the same comparator.

After measuring each drill hole three times, both at the beginning and end of each 2 1/2 hour set, the comparator operator compares the average measured coordinates for the same drill holes. If a measurement difference exceeds 3 microns, that 2 1/2 hour set is remeasured (about 4% of measurements).

Calibration of Comparator - A standard error of coordinate measurement within the range of 0.7 and 1.3 microns is maintained for all comparators through frequent measurement of a precisely calibrated grid plate in each of the four primary rotational orientations by three different operators. These twelve sets of measurements are separately reduced, computing corrections only for linear differential measuring screw length and non-perpendicularity of coordinate axes. The computer program used for this reduction applies these computed corrections to the measurements. A least squares fit of the corrected plate measurements of the 25 grid intersections to the true or calibrated grid values determines the residual standard error of coordinate measurement.

Reduction of Measurements - The comparator measurements are processed with a computer program referred to as "Comparator Reduction". This program transforms the raw comparator coordinates of all points to a coordinate system having its origin near the center of the plate as determined by the intersection of the lines connecting the drill holes in opposite corners. The program also applies comparator calibration corrections.

The next step, Patching, consists of transformation of each 2 1/2 hour set of measurements of the eight drilled holes into a single coherent set. The rejection limit for a 2 1/2 hour set of measurements is set at a mean coordinate deviation of 0.6 micron between that individual set and the mean coordinate values derived from all sets of measurements. At the same time, all star and satellite measurements are transformed along with the associated drilled hole measurements.

Following this, the Matching program combines the refined coordinates of the 0° and 180° sets of star image measurements into a single bias-free set by making a "best fit" and further refining the image coordinate values by computing the mean coordinate for each image after the best fit transformation. The standard deviation of the individual coordinates from the mean is computed as a measure of the precision of the measuring and patching procedure. If the standard coordinate deviation is greater than 2.5 microns the entire set of star measurements is rejected. About 25% of plates are rejected at this point.

Rotation and Translation is the treatment of the satellite images in the 0° and 180° positions with the same transformations given the star images by the Matching program. As in Matching, a single set of mean image coordinates is computed for use in the next phase of data reduction and standard coordinate deviation is computed to show the magnitude of operator bias between star and satellite image pointings, together with the standard error of a single satellite pointing.

The refined star and satellites coordinates are then translated to a coordinate system based on the four fiducial marks rather than the drill holes which were arbitrarily drilled near the fiducial marks.

## III. Geometric Solution of Triangulation Problem

Preliminary Orientation - The Boss Star Catalog data (equator and equinox of 1950.0) in radian values is stored on magnetic tape. To obtain the full data for a star it is necessary to input approximate right ascension and declination values (in radians) into a Boss Look-up Program. This program searches the tape for each star and punches cards with the full star data (right ascension and declination, annual variation, secular variation, proper motion). In this manner, the star data for the 7 stars which are identified from the star chart are punched on cards. This star data, along with appropriate header cards for station position, Local Sidereal Time, Independent Day Numbers, temperature and pressure at time of observation are input into a Star Reduction program. This program projects the right ascension and declination coordinates onto a plane tangent to the celestial sphere at the point where the projected optic axis meets the sphere. The projected coordinates, $\xi$ and $\eta$ are referred to as standard coordinates.

$$\xi_j = g \cos \Delta - y \sin \Delta$$

$$\eta_j = g \sin \Delta + y \cos \Delta$$

$$\Delta = \text{rotation angle} \qquad (1)$$

$$g = \frac{\cos \varphi \sin \delta - \sin \varphi \cos \delta \cos H}{\sin \delta \sin \varphi + \cos \delta \cos H \cos \varphi}$$

$\varphi$ = longitude of reference

H = local hour angle

$\delta$ = declination of star

The station latitude, temperature, and pressure are used to correct for refraction.

The next step is the Preliminary Orientation program where the standard coordinates for these 7 stars are referenced to the measured coordinates of the stars. This program determines the preliminary orientation parameters $\alpha$, $\omega$, k, $x_p$, $y_p$, c (zenith distance, azimuth, rotation angle, differences between the origin of standard coordinates and the projected origin of plate coordinates in x and y, and the focal length, respectively).

$$a_1 \xi_j + b_1 \eta_j + c_1 - a_o \xi_j x_j - b_o \eta_j x_j = x_j$$

$$a_2 \xi_j + b_2 \eta_j + c_2 - a_o \xi_j y_j - b_o \eta_j y_j = y_j$$

$$\tan \alpha = a_o$$

$$\tan \omega = b_o \; (a_o^{\,2} + 1)^{-1/2}$$

$$c = \left[ \frac{(a_1 b_2 - a_2 b_1)\,(1 + a_o x + b_o y)^3}{a_1 b_2 - a_2 b_1} \right]^{1/4} \qquad (2)$$

$$x_p = \frac{a_o a_1 + b_o b_1 + c_1}{a_o^{\,2} + b_o^{\,2} + 1}$$

$$y_p = \frac{a_o a_2 + b_o b_2 + c_2}{a_o^{\,2} + b_o^{\,2} + 1}$$

$$\tan k = \frac{-a_2}{b_2}$$

Refined Orientation - The six preliminary orientation parameters are then applied to each star image measurement and an approximate right ascension and declination is computed for that star image. This is known as the Star Identification program.

$$\alpha = \alpha_o + \Delta t\,(V_{A_a}) + \frac{(\Delta t)^2}{200}\,(V_{S_a}) + TM_a + f + g\,\sin(G + \alpha_o)\tan\delta_o$$

$$+ h\,\sin(H + \alpha_o)\sec\delta_o$$

$$\delta = \delta_o + \Delta t\,(V_{A_\delta}) + \frac{(\Delta t)^2}{200}\,(V_{S_\delta}) + TM_\delta + g\cos(G + a_o) \qquad (3)$$

$$+ h\cos(H + a_o)\sin\delta_o + i\cos\delta_o$$

f, g, h, G, H, i are Independent Day Numbers

where

$\Delta t$ - year of observation minus star catalog epoch

$V_A$ = annual variation, M = proper motions

$V_S$ = secular variation, T = dec. part of year

The approximate right ascension and declination for each star image is input into the aforementioned Boss Look-up program. The output of this program will be the catalog information for as many of the stars that are on the tape.

The data for all the stars with the corresponding station data, observation data, and Independent Day Numbers for each image time are input into the Star Reduction program, which also was reviewed earlier. With the output of this program, the ($\alpha$ and $\delta$) values are transformed into $\xi$ and $\eta$ values.

These $\xi$ and $\eta$ values are referenced to the plate coordinate values for each star image in the Single Camera Orientation program. This program is essentially equivalent to the Preliminary Orientation program in that the plate orientation parameters are computed. The Single Camera Orientation values are much more refined since they are determined by a least squares fit of 750 images (5 images for each of 150 stars) compared with 7 images for the preliminary set. The solution of this problem is an iterative computational process and involves the rejection of points having excessively large disparities between the measured plate coordinates and the computed standard coordinate values. This would occur, for example, if a star were misidentified or a comparator pointing number was incorrectly designated. There are three sets of input data for each plate. The first set of data includes all the stars, the second only the pre-event stars and the third only the post-event stars. The pre and post results are compared

to assure that the camera orientation did not change during the observation period. This Single Camera Orientation also computes the radial lens distortion parameters.

When fitting approximately 750 star images (375 pre-event and 375 post-event) to the standard coordinates, the typical standard plate coordinate error is less than 3.0 microns. Relative weights for plate and catalog positions are introduced in the solution. The standard error of the catalog positions is assumed to be about $\pm$ 0.4 micron at plate scale.

This Single Camera Orientation program also computes the orientation parameters for a rotated system. In this system, all the $\xi$ and $\eta$ terms for all observations are referenced to a coordinate system based on the latitude and longitude of station Schmid at Aberdeen Proving Ground, Aberdeen, Maryland.

Next, the Satellite Intersection program uses the rotated single camera orientation parameters for two or three cameras simultaneously observing the same event to obtain a preliminary position and slant range for the approximately 600 associated satellite image coordinates.

The slant ranges and satellite positions are used in Satellite Reduction to correct each satellite plate image position for lens distortion, diurnal abberation, atmospheric refraction, and the displacement of the satellite image because of the phase angle at the satellite between the sun and observing station.

These refined satellite image coordinates are then submitted to a least squares curve fitting program which successively fits curves of 5th through 7th order polynomials to the image coordinates using a power series with respect to time to smooth random errors of the satellite imagery which originate from the measuring process, emulsion shifts and the atmospheric shimmer effect. These curve fits typically have a standard deviation of

2.5 to 3.0 microns for a single satellite image. Making allowance for a standard deviation of 1.5 microns for measurements of image coordinates, a standard deviation of 2.5 microns results from the shimmer effect and emulsion shifts.

In the next step, a fictitious point is computed for the satellite on each plate of an event. Parameters which define the curve are a part of the output of the Curve Fitting program. Based on these parameters, a simultaneous Universal Time near the center of each plate is selected. A fictitious image coordinate is computed for each plate taking into consideration corrections for the difference in light travel time to the different camera stations and time corrections for lack of synchronization of station clocks. This Fictitious Point computation is not necessary for an active satellite since the flash times are synchronous for each camera station.

The standard deviation of a computed fictitious satellite position is less than $\pm$ 0.2 micron at the center of the plate. When combined with the standard deviation of the orientation at the center of the plate, about $\pm$ 0.4 to $\pm$ 0.6 micron, the accuracy of the final direction to the satellite should be approximately $\pm$0.6 microns or $\pm$0.3 seconds of arc.

## References


1. Butler, Lila M., 1964, Computer Program for the Single Camera Orientation Case of the General Problem of Photogrammetry: Ballistic Research Laboratories Report No. 1268, Aberdeen Proving Ground, Maryland.

2. Coast and Geodetic Survey, 1965, Satellite Triangulation in the Coast and Geodetic Survey: Technical Bulletin No. 24.

3. Wooten, A. Roberta, 1963, ORDVAC PROGRAMS for Star Identification and Computation of Standard Coordinates: Ballistic Research Laboratories Memorandum Report No. 1451, Aberdeen Proving Ground, Maryland.

4. H. M. Stationery Office, 1961, Explanatory Supplement to the Ephemeris: London, England.

5. Taylor, Cmdr. Eugene, C & GS, Private Communication.

6. Slama, Chester, C & GS, Private Communication.

## Army Map Service's

## BC-4 Cameras

The Army Map Service is developing its own satellite triangulation program generally along the same lines as the Coast and Geodetic Survey's program. The AMS presently has four BC-4 ballistic camera units. One Mann Comparator has been calibrated with more measuring devices on order. The AMS is also converting many of the C & GS data reduction procedures into programs compatible with its computers.

The Army Map Service will shortly have the capability for complete plate reduction. Until that time, AMS plates are being reduced by the C & GS.

## Reference

1. Rutscheidt, Eric, AMS, Private Communication.

GEOS A Tracking Equipment at the Astronomical Institute of the University of Bern, Switzerland

The observing station is located at Zimmerwald (near Bern). The instrument to be used is a Schmidt camera with a focal length of 1040 mm and an aperture of 400 mm. Ilford HPS and Ilford HP3 sheet films will be used and their development will be in Ilford ID-11.

The circular photographed film, approximately 5" in diameter, has a field of 6°40'. This camera may be reloaded in 3 minutes.

The transmission factor of the lens-mirror system is 85-90% and the quantity of light for a 40 micron image is $5 \times 10^{-10}$ lumen-seconds per square meter.

No further pre-processing information is available.

## Reference

1. Schürer, M., Universität Bern, Astronomisches Institut, Private Communication.

# ELECTRONIC EXPERIMENTS

## The Minitrack System as Used in GEOS

### I. Introduction

Within the Space Tracking and Data Acquisition Network (STADAN there are presently twelve Minitrack interferometers located about the globe. These interferometers provide most of the tracking on those unmanned satellites for which the Goddard Space Flight Center (GSFC) has a responsibility. For GEOS, Minitrack observations are the basis for orbit determination. These determinations are used for scheduling observations of the optical beacon as well as some of the electronic instrumentation.

Not designed for geodetic purposes, Minitrack lacks the precision of other tracking systems used on GEOS. For balance, however, some investigators may find Minitrack data, suitably weighted, a useful addition to the mix. One of the virtues of Minitrack for geodesy is that its stations are well distributed around the earth.

### II. Description of System

The Minitrack interferometer operates in the 136 to 137 Mc/sec band. It consists primarily of four distinct antenna pairs, or baselines, two aligned north-south and two east-west. Each principle antenna is a phased array of 8 slot elements arranged in-line, providing a fan shaped beam of $11^{\circ}$ by $76^{\circ}$ to the 6db points. Two pairs of the antennas, one east-west, one north-south, are arranged so that their antenna patterns are narrow in the east-west dimension and long in the north-south forming a fence through which a satellite must pass.

This orthogonal set of baselines is called the "equatorial" system and in itself is adequate to define the angular coordinates of a satellite within its fixed beam pattern. The remaining set of baselines has a beam pattern running east-west to intercept satellites in predominantly polar orbits--called therefore the "polar" system. Satellites are tracked on one system or the other which have to share the use of a common set of electronic channels. They also have in common a set of "ambiguity" baselines and of a length calculated to permit translation of the phase information from the longer baselines into direction angles. The length of the primary baselines is as follows:

| | Number of Wavelengths (in a vacuum at 136.5 mc) | In Feet |
|---|---|---|
| Polar | 57.2089 | 412.227 |
| Equatorial | 46.1689 | 332.6748 |

Figure 1 is a block diagram of the main electronic elements of the receiving and phase comparison system. The system is designed to maintain the phase relation between the two signals as presented at the antennas except for relatively invariant biases. This is done by putting the two signals into the same channel only 100 cps apart before I. F. amplification, envelope detection and filtering take place. The predetection bandwidth of the system is 10 kc and the post detection bandwidth for GEOS will be 10 cps or, in the case of a few stations employing a tracking filter, 3 cps. Timing and frequency standards come from a highly stable clock periodically synchronized to the WWV received signal and checked daily for any drift with respect to that standard.

Main Electronic Elements of the Receiving and Phase Comparison System

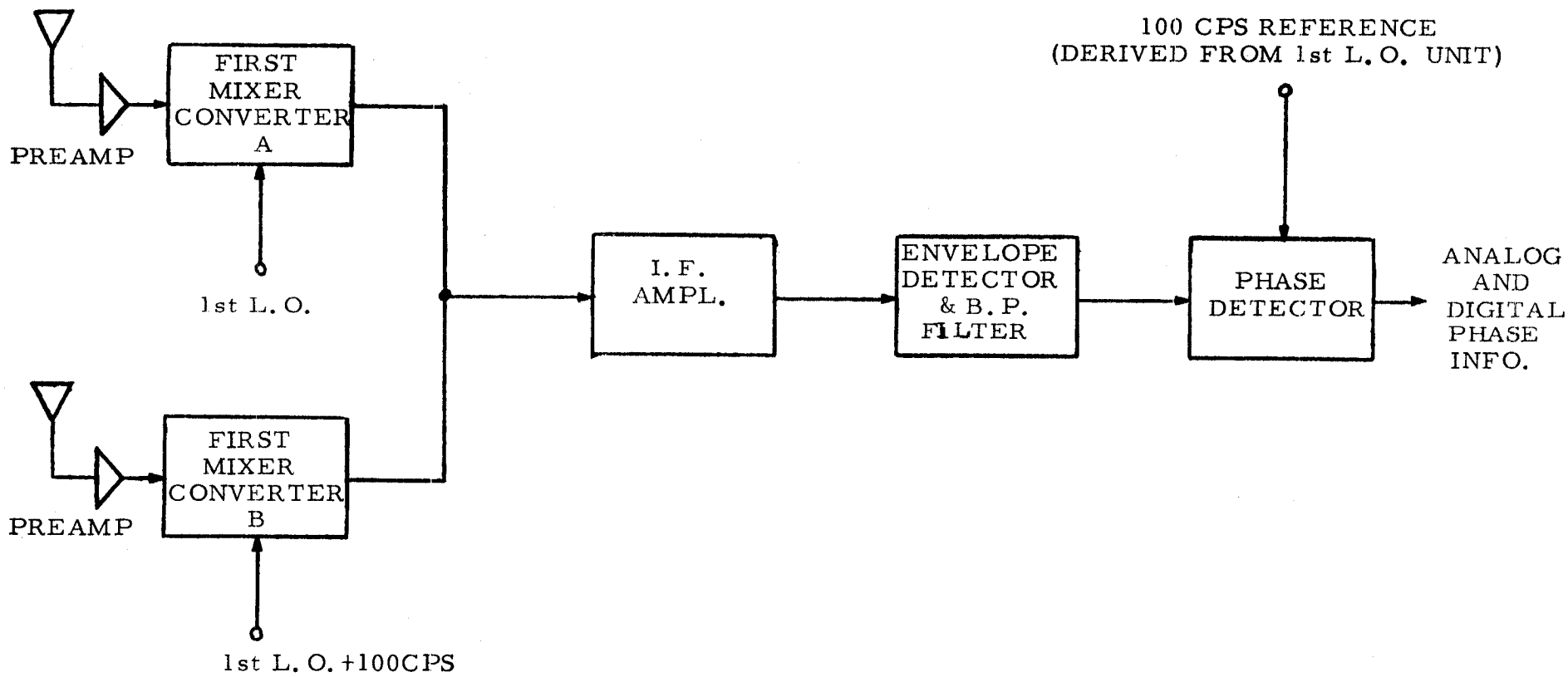


Figure 1

## III. Calibration

Given the relatively long baselines of the Minitrack system and type of fixed antennas employed no satisfactory scheme for daily calibration of phase drifts that looks at all the system components including antennas and RF transmission cables has been devised. The actual calibration method employs a high precision optical technique for determining the location of an airborne spiral antenna emitting a 136 mc/sec. carrier while being tracked by the interferometer system. Reduction and comparison of the optical and interferometer data provides calibration values for all stable error sources including phase biases on RF transmission lines and displacement of antenna phase centers from the mechanical centers of their respective arrays. These calibrations are repeated at 4 month intervals depending on the availability of aircraft and local weather conditions.

The more volatile phase drifts that occur in the electronic components of the system including pre-amps, receivers, mixers, etc. are calibrated before and after each pass by an internal calibration system that takes a 136 mc/sec signal and divides it to each side of a given baseline and records phase difference output. Any change in this output is added into an updating of the phase biases determined in the prior aircraft calibration. These internal phase calibrations normally show no drift for hours and even weeks. However deterioration of components and maintenance activities can produce slow change in the first case and radical changes in the second.

## IV. Data

Output of the Minitrack system is in both digital and analog form. For GEOS only the digital output will be employed. Output consists essentially

of time, received signal strength, coded indication of whether it is the polar or equatorial system that is tracking, and phase difference information from the two long, or "fine", baselines and the four ambiguity baselines. Each frame of data gives both fine channel readings on the second and succeeding .2, .4, .6, .8 second marks. Each ambiguity channel is sampled only once during the frame. Individual frames of data may be spaced at one second, two second or ten second intervals. For GEOS the frame interval will normally be one second, or, in other words, phase differences for both fine baselines will be provided every .2 seconds. The tracking station will teletype to the GSFC only 29 seconds of data taken while the satellite passed through the middle of the antenna beam fan. Along with this will be sent the phase calibration data needed by the computations group to compensate for any drifts.

For the fine baselines, phase differences are measured and recorded to 0.001 of a cycle. The ambiguity baseline information is recorded to 0.01 of a cycle.

## V. Data Processing

Minitrack data processing is performed at the GSFC by the Operational Computing Branch. There are a variety of computer programs for handling this incoming data but the one normally to be used on GEOS will behave as follows. It will feed in all the calibration corrections that apply to each individual baseline. It will resolve ambiguities using primarily the short baseline data for position estimation but relying also on predicted positions. (Note: This procedure used to be troublesome because the margin of error on the ambiguity channels is relatively small but the Operational Computing

Branch now allows very little misresolved data to get through. If, however, a data user finds that a Minitrack observation fails to fit a good orbit by as much as 0.75 degrees, the reason lies in ambiguity resolution. Actually, by using the given orbital data along with the original phase information this error could be corrected out but, unfortunately, no present scheme allows for this).

After ambiguity resolution the phase data is smoothed and converted to direction cosines. The formula employed for this conversion is simply

$$\text{direction cosine} = \frac{\text{phase difference (including integral wavelengths)}}{\text{number of wavelengths in baseline (for a vacuum)}} \quad (1)$$

Smoothing will be over the full data message for GEOS. Therefore it will produce from some 145 data points of both east-west and north-south data, one direction cosine with respect to the given east-west baseline and one with respect to the north-south baseline. (Note: It can occur, as the result of poor quality data in a channel, that only one of the direction cosines will be provided.) The smoothing is done with a least squares parabolic fit to the entire. data set, i.e.,

$$\cos \alpha = a_0 + a_1 t + a_2 t^2$$

Before the final fit is obtained extremely noisy observations are rejected, usually on a 2.5 sigma basis.

## VI. Data Limits

Outside of early orbital conditions when data is at a premium, Minitrack data is not taken at zenith angles greater than 20° to 30°. On GEOS, however, for study purposes data will be taken with limits practically at the horizon. For several reasons this data will be relatively weak and should be weighted

accordingly since:

(1) At low elevation angles signal strength will be down.

(2) Multipath could be a problem.

(3) Refraction uncertainties, particularly ionospheric effects, increase greatly.

(4) Most importantly, examination of the basic formula, Equation 1, shows that phase difference is an insensitive determiner of angle $\alpha$ for $\alpha$ near $0^{\circ}$.

## VII. Basic Resolution of Minitrack

The resolution of the Minitrack system is basically determined by three parameters of the system:

(1) frequency employed, i.e., 136 Mc,

(2) baseline length and

(3) precision of the phase measuring components.

Phase measurement is good to 1/3 of an electrical degree or, actually, 0.001 wavelengths. Using Equation 1, it is found that

$$\cos \alpha = \frac{.001}{57.209}$$

With the relatively strong signals from GEOS the Minitrack system should come close to exhibiting this theoretical resolution in actual tracking Best estimate would be a resolution of two parts in 50,000 under normal noise conditions. For a satellite not too far from zenith, this resolution of

two parts in 50,000 is equivalent to about 0.002 degrees of space angle. Resolution, as described here, is different from system accuracy.

## VIII. Error Sources and Accuracy Considerations

### A. Time

The precision and stability of the time and frequency standard used in Minitrack is more than adequate for that system. The only problem is in estimating the time delay in transmission of the WWV signal to remote sites. This calculation is done with a simple model of the WWV ray path to the site. It is calculated for a given time of day and ordinarily clock synchronization at the stations is done at that time. No allowance for any other variation is made and this value is given as a station constant in the computer reduction. The time reported on reduced Minitrack data then, is WWV as emitted. Examination of the magnitude of the error in estimating this transmission time delay has been made. One experiment using satellite telemetry pulses observed simultaneously from a number of stations, some in proximity to WWV, showed estimates to be good to better than 0.002 seconds for stations like Johannesburg with a total delay of about 0.045 seconds.

### B. Time Delays in the Electronics

(1) Filter delays for the 10 cps filters are 0.030 seconds This correction is added by the computer as a time correction and is good to $\pm$ 0.001 seconds.

(2) Another time correction is added for a delay that, in one way of looking at it, results from the finite time during which the phase angle is measured. The digital phase

measurement employs a time interval counter. For small phase differences the time is negligible but for a full count of 0.999, ten milliseconds is required. During the interval the reading is being taken, the phase difference can be changed by the satellite's motion. The correction term applied is (0.010 secs.) x (the decimal phase reading). The correction is actually made to the raw data in terms of phase rather than time. It is done with a simple interpolation that is completely adequate for the small time interval involved. Uncorrected error is less than 0.001 millisecond in equivalent. time.

C. Phase drifts

Phase drifts may occur at a number of points. By virtue of the internal phase calibration only those occurring in the antennas, RF cables, and in the switches that receive these cables in the equipment house will cause substantial errors in the data reduction. These uncompensated drifts in calibration will vary over time and from station to station in complex fashion. More than eight years of experience and several hundred aircraft calibrations show this uncompensated drift to affect results by about $\pm$ 0.003 wavelengths or, roughly, $\pm$ 11 seconds of arc. What could properly be termed phase drifts occurring during a pass would very seldom exceed 0.001 wavelength, or approximately 4 seconds of arc, from any cause. This is not to say that this will be the limit of erratic behavior in Minitrack phase measurements but simply that additional error is attributable to other sources than a "drift" with time.

D. Determination of Baseline Length and Orientation, i.e., Stability of Antenna Phase Centers

Each antenna array forming one end of a primary Minitrack baseline consists of eight dipoles. Ordinarily the phase center of the array lies within 2.5 centimeters of the geometric center of the antenna. (Note: This is about the minimum error that can be ascertained in this parameter from the aircraft calibration data. Other error sources tend to mask small errors in this parameter.)

When, however, connector problems occur or other failures prevent one element or more in the array from contributing fully to the received signal, there will result a sizable shift in the phase center for the entire antenna. For baselines like that in fig. 2 (a) a shift of phase center will produce a reorientation of the baseline. For those like that in fig. 2 (b) there will be a shortening or lengthening of the baseline.

Since data reduction is predicated on nominal lengths and orientations any shifts of the phase center will produce error in the output. The size of this error is a function of the direction angle in accordance with Equation 1.

For a satellite just crossing the vertical plane through the baseline the phase difference is zero and the resulting error in estimating the direction cosine is zero. (This assumes that the angle of disorientation $\epsilon$, is small enough so that $\cos \epsilon \approx 1$ and $\sin \epsilon \approx \epsilon$ — a reasonable assumption.) For satellites observed at zenith angles of 40° these errors can amount to several minutes of arc.

Antenna Baselines

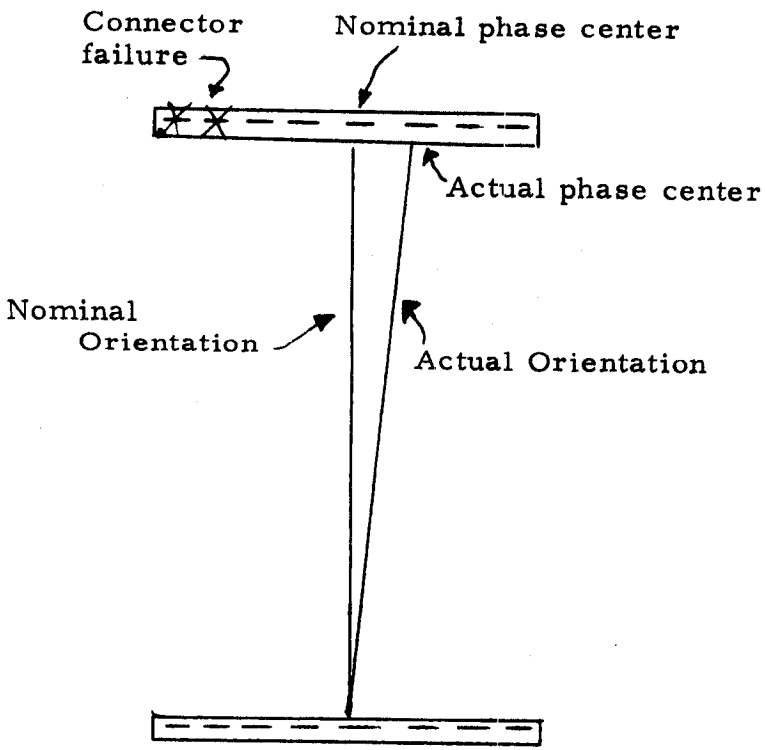


(a)

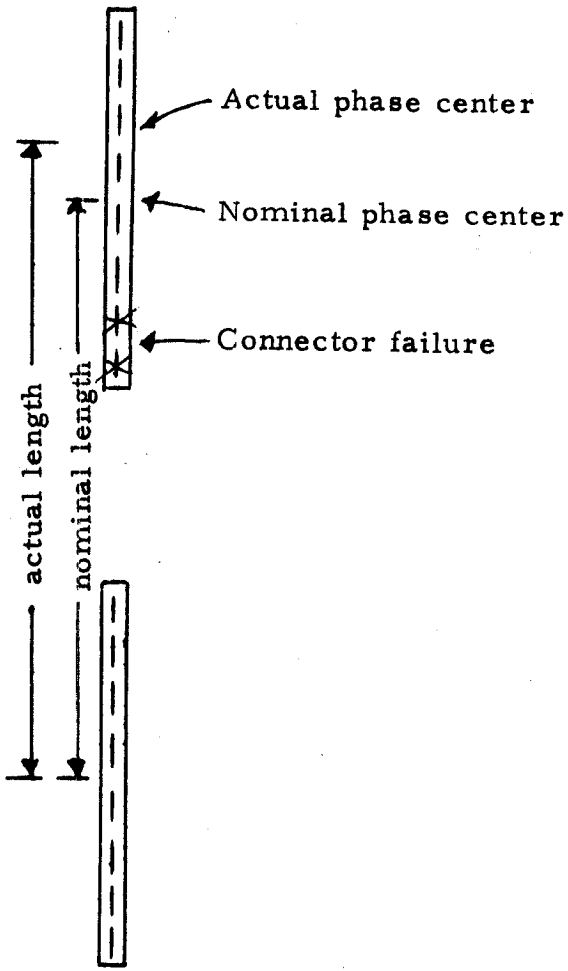


(b)

Figure 2

The antenna problem does not occur often but when it does it may persist for a number of months - until the next aircraft calibration or inspection by a special team of antenna experts.

E. Cross Talk

Labeled as cross talk between the signals from the two antennas of the baseline, this is a troublesome error that amounts to $\pm$ 0.003 wavelengths. As the phase difference cycles through one wavelength the error in question completes one cycle. It has an amplitude of up to 0.004 wavelengths and an invariant relation to the phase difference on a given baseline. This relation differs from one baseline to another or one station to another. Effort is made to calibrate this error out but these efforts to date have not been altogether successful.

Actually smoothing can take care of this error where the satellite is tracked through a number of cycles. However, if on one baseline the phase difference remains relatively constant for the entire pass as is usually the case, then this error will not be smoothed out and will appear as a bias.

F. RF Propagation Problems

In normal operation refraction is not a major problem for Minitrack because of the 20° or 30° limits on the zenith angle for taking observations. On GEOS, as noted, tracking will be done over a wide field of view. Ionospheric and tropospheric refraction should be taken into account by the data user. (Note: Observations supplied to the Geodetic Data Center will not have these corrections in them.) Considering the basic accuracy of the instrument, refraction corrections based on nominal data should suffice. No atmospheric or other such information will be supplied for the purpose of these corrections. It is recommended that observations remote from zenith be sharply reduced in weight in any data reduction process.

Multipath may be a problem of the system. This is most difficult to assess and no terrain or other such effects have been separated out by the system analysis performed to date. It is possible that, despite the large antenna ground screens, the largest errors in Minitrack data are attributable to this cause.

G. Interference

The Minitrack interferometer will track on such noise sources as the sun and radio stars. When one of these sources is in the beam at the same time as GEOS there will be a compromise on the apparent location of the target. Since these noise sources provide a signal that is nearly always weak as compared to the satellite signal, e.g., -130 dbm versus -105 dbm, this effect is not large. Its expected magnitude has not, to this author's knowledge, been calculated. No effort is made to compensate for this error except that tracking activities are restricted when the sun is in the main beam of the antenna.

H. Frequency Effects

The Minitrack system is insensitive to frequency drifts in the satellite signal or Doppler effects. Even if an error of several Kc were to be made in estimating the frequency the affect on accuracy would be negligible. The one potentially troublesome frequency effect enters the picture from the fact that although the Minitrack systems are calibrated with aircraft at 136.5 Mc., they may track at frequencies near 136.0 or 137.0 Mc. Internal calibrations are taken at whatever frequency is going to be tracked. Any phase shifts that occur in the receiving system as a function of frequency are calibrated out. But relative shifts that may occur in the RF lines to the antennas and in the antennas themselves cannot be calibrated out. Therefore precautions are taken to make these elements as nearly identical as possible

so that phase shifts with frequency in one side of the baseline will be matched on the other. In particular the RF cables are cut to the same electrical length and buried at a good depth to avoid relative differential changes in environment. Tests employing the aircraft and 136.0 and 137.0 Mc transmitters have shown no detectable error resulting from differential phase shifts versus frequency in the antennas and cables as far as the important primary baselines are concerned.

I. Errors From Other Sources

From extensive examination of both aircraft calibration and satellite tracking data it appears that errors from sources that are unresolved and erratic outweigh those from analyzed sources. As mentioned, these errors may largely be of the RF propagation type.

J. Overall Accuracy

The smoothing that takes place in the reduction of raw Minitrack data shows a standard deviation of fit that runs to 0.003 wavelengths, or about 11 seconds of arc, on a satellite that is stabilized and generating a decent signal. The sample size on GEOS will be such that these random errors will be entirely nil in their effect on the reduced data.

The current best estimate on the upper limit of Minitrack error is that obtained from the standard deviation of fit for all the observations used in determining an orbit. Typically orbits are updated at weekly intervals at GSFC using the previous week's accumulated observations. The number of distinct smoothed data points may run as high as 2500. How large the fitting resuduals may be on such an orbit depends on the care taken in computation, i.e., the number of iterations to cull the obviously bad data points and the number of orbit parameters allowed to vary, and, more importantly on the satellite orbit. Where the orbit is relatively unperturbed and computation is carefully done observational residuals will fall between 0.1 and 0.2 milliradians. This is a conservative esti-

mate of the Minitrack system accuracy since at least part of the residual represents inadequacies in the orbit computation, particularly in estimation of the gravitational parameters. How much of the error is attributable to the orbit is not certain.

Another estimate of Minitrack accuracy comes from the extensive aircraft calibration data. For stringently smoothed data the resultant error runs typically at $\pm 0.006$ wavelengths or about 25 seconds of arc (six parts in 50,000). This figure lies close to the accuracy for which the system was designed.

## References


1. Simas, V. R. and Mallinckrodt, A. J., eds., Spacecraft Tracking: Goddard Space Flight Center to be published.

2. NASA 1958, Tracking and Guidance Branch, Minitrack System Training Manual: Project Vanguard.

3. Schroeder, C. A., Sept. 1960., Electronic Interferometer Tracking: Trans. IRE, Fifth National Symp., Space Electronics and Telemetry.

4. Mengel, J. T., Minitrack System Design Criteria: Elect. Engr., Vol. 76, No. 8.

5. Mengel, J. T., June 1956, Tracking the Earth Satellite and Data Transmission by Radio: Proc. IRE., Vol. 44, No. 6.

6. Bendix Radio, for NASA - GSFC., Instruction Manual for 136 Mc. Minitrack Interferometer System: Vols. I and II.

7. Oosterhout, J. D., Goddard Space Flight Center, Private Communication.

Goddard Range and Range Rate (RARR) System

## I. Timing

Each RARR station is equipped with a digital clock driven by an ultra-stable crystal oscillator with frequency 1 Mc The digital clock counts 1 Mc pulses down to 1 pps, and then provides these pulses to a counter.

The oscillator is synchronized daily with WWV with corrections applied for propagation delay. The stability of this oscillator is better than 5 parts in $10^{10}$ per day.

In addition, 1 pps provision is made to record time on punched paper tape using 36 bit BCD levels and serial outputs consisting of the NASA time standard code (36 bit, 100 pps modulating a 1000 cps carrier) for recording on magnetic tape.

The absolute time with respect to WWV at a given station is known to $\pm$ 1 millisecond.

The digital clock, in addition to providing time information, is used to drive the reference pulse generator (see Hardware). This clock provides synchronization of the ranging sidetones and range pulse rates with the clock.

## II. Hardware

The Goddard RARR system is both a range and range rate system. We will discuss the operation of each system separately.

The RARR system has an auto-tracking capability. The apparatus utilizes both VHF (~148 Mc) and UHF (~2271 Mc) up-link carriers.

In the present operation, the VHF channel with the relatively broad beamwidth (approximately $18^{\circ}$) is used to initially acquire the satellite by detecting the 136 Mc Minitrack beacon. Upon acquisition with the S-band receiver, the S-band antenna (approximately $3^{\circ}$ beamwidth) adopts an auto-track mode of operation. The S-band system is then independent of the VHF system and is prepared to extract range and range rate data.

The S-band transponder on the satellite is capable of operation with two ground stations simultaneously the down-link carrier frequency being approximately 1705 Mc. Time delays in the transponder are 3 to 4 microseconds.

Range Measurements

Range measurements are accomplished by measuring the phase shift in seven coherently produced, phase modulated sidetones on the S-band channel. The seven sidetones allow the removal of range ambiguities down to 15 meters. The basic sidetone frequencies presently used are:

| Ranging Frequencies |
|---|
| 100 Kc |
| 20 Kc |
| 4 Kc |
| 800 cps |
| 160 cps |
| 32 cps |
| 8 cps |

Table 1

All of the above frequencies are produced coherently in the reference pulse generator which is synchronized with the station digital clock. An automatic synchronization circuit maintains this lock with the digital clock. For GEOS there will normally be one sample of range and one sample of range rate per second made, although two, four, and eight samples per second are also possible.

The ranging frequencies produced are used to phase modulate the S-band up-link carrier. However, since the range rate is determined from the Doppler shift in carrier frequencies,the sidetones below 4 kc are combined with 4 kc before being put on as modulation. This is to avoid having sidetones too close to the carrier frequencies which make Doppler measurements difficult. The sidetones are combined into a composite signal by means of a summing amplifier. The relative phase stability between each of the range tones is 3.6 degrees. This phase stability is important in attempting to resolve range ambiguities.

The modulated up-link carrier is received by the transponder. The modulation is removed and used to modulate the down-link carrier. This is done maintaining phase coherence.

The ground receiver provides filtered range tones to the range extraction unit where the phase shift in each sidetone is determined.

Range Rate Measurements

The range rate is determined by measuring the received Doppler cycles per unit time. This is accomplished by measuring the time necessary to count a fixed number of cycles of the two-way Doppler plus bias frequency (500 kc). From this the average velocity or range rate relative to the tracking site can be determined.

In order to determine the Doppler frequency, it is necessary to maintain frequency coherence of the ground transmitter frequency through the transponder and back to the ground receiver. At the ground receiver the signal is compared against a coherent sample of the transmitter frequency to determine the Doppler frequency.

Recording System

The range and range rate data is recorded on punched paper tape. The data recorded includes:

1) Range data from range extraction unit
2) Range rate data from range rate extraction unit
3) Coded local station time
4) Coded station identification
5) VHF and S-band antenna positions
6) Teletype printer carriage return signals

## III. Calibration of Hardware

The ranging portion of this system will be calibrated prior to each satellite pass. The calibration is accomplished by measuring a known range. A pole beacon is used to simulate the satellite transponder. The phase shifters in the ranging system are adjusted so that the range measured by the system agrees with the surveyed range. No calibration of the range rate system is made.

Prior to the satellite flight each transponder channel is checked to determine the time delay it imposes. The transponder of the GEOS-A vehicle has a delay in channel A of approximately 3.5 microseconds and delay in channel C of approximately 3.8 microseconds. Corrections for these delays are made in post flight analysis.

## IV. Processing of Data

The processing procedures described below are carried out post-flight. These procedures determine:

1) true time of each range sample
2) true time of each range rate sample
3) unambiguous range
4) range rate

The following symbols will be used below:

$c$ = velocity of light = 299,792,500 m/sec

$F_L$ = frequency of lowest sidetone employed in range measurement 8, 32, or 160 cps

$T_{DR}$ = reciprocal of recording rate = 1, 2, 4, 8 (for GEOS 1 per second is contemplated)

$T_W$ = propagation delay for WWV signal to a given station

$N_F$ = the fixed number of cycles of the two-way Doppler plus bias frequency counted in range rate measurement.

$T_T$ = effective transponder delay

$T_T = T_D - T_P$

where

$T_D$ = the satellite transponder delay

$T_P$ = pole beacon simulator delay

1) True time of each range sample

The correct two way propagation time, $T_{RT}$, including the effect of transponder delay, $T_T$, is computed as follows:

$$T_{RT} = T_R + \frac{N}{F_L} - T_T \tag{1}$$

where $T_R$ is the measured time interval corresponding to the phase shift between the transmitted and received signal and N ( = 0, 1, 2. . . ) is the total number of complete periods of the lowest sidetone frequency. The number N, is obtained from a nominal range.

The time of the range measurement, $T_{RM}$, then is related to $T_{RT}$ as follows:

$$T_{RM} = T_S + T_R - \frac{T_{RT}}{2} + T_W \tag{2}$$

where $T_S$ is the time at the start of the range sample. Note: $T_{RM}$ represents the time at which the ranging signal was at the spacecraft.

2) True time of each range rate sample

The time of a range rate sample is taken to be

$$T_{RM} = T_S + \frac{T_R}{2} - \frac{T_{RT}}{2} + T_W \tag{3}$$

where $T_R$ is the time required to count $N_F$ cycles of the bias plus Doppler frequency.

3) Range Measurements

The range time interval measurement is converted to units of length as follows:

$$R = \frac{c}{2} \left( {}^{T}R\,T \right) \tag{4}$$

$$R = \frac{c}{2} \left( T_R + \frac{N}{F_L} - T_T \right) \tag{5}$$

Provision is made in the initial processing program to account for other bias errors, $T_B$, by using

$$R = \frac{c}{2} \left( T_R + \frac{N}{F_L} - T_T - T_B \right) \tag{6}$$

instead of equation (5).

4) Range-rate measurement

The range-rate time interval measurement, $T_{\dot{R}}$, is converted to velocity by the following:

$$\dot{R} = \frac{c}{2F_U} \left( B - \frac{N_F}{T_{\dot{R}}} \right) + \frac{c}{4F_U^2} \left( B - \frac{N_F}{T_{\dot{R}}} \right)^2 \tag{7}$$

where $F_U$ is the up-link frequency and B is the bias frequency.

## Smoothing

In the post-flight data reduction, the range and range-rate data are fitted to a third or fourth order polynomial of the form

$$F(t_i) = A_0 + A_1 t_i + A_2 t_i^2 + A_3 t_i^3 \tag{8}$$

using the method of least squares. The fit is made to 20 samples of range and 20 samples of range-rate respectively. In the process of this smoothing samples are rejected on the basis of a 2.5 $\sigma$ criterion. Those so rejected are not used in the final determination of the polynomial coefficients.

Either one of two convergence tests must be met

1) no samples are discarded

2) $\sigma$ becomes less than a preset minimum

The smoothed parameter is given to be $t_M$ and $F(t_M)$, where $t_M$ is taken to be the time of the middle sample.

To maintain maximum computational accuracy the raw time values, $t_i$, and the corresponding data values, $D_i$, are normalized about the midpoint values $t_M$ and $D_M$, respectively. This is done as follows: the abscissa and ordinate are defined as

$$X_i = t_i - t_M$$

$$Y_i = D_i - D_M$$

application of the method of least squares yields

$$Y_i = A_0 + A_1 X_i + A_2 X_i^2 + A_3 X_i^3 \tag{9}$$

Since $X_M = 0$ when $t_i = t_M$

then $Y_M = A_0$

Thus the smoothed data, $F(t_M)$ is

$$F(t_M) = D_M + A_0 \tag{10}$$

This smoothing is applied to consecutive sets of 20 samples; it is not a moving arc fit.

## Atmospheric Corrections

There will be no attempt made to correct the range and range-rate data for effects of atmospheric refraction. At the frequencies used, the atmospheric refraction correction is predominantly due to use of an incorrect value for the speed of light through the atmosphere and each investigator may make his own correction.

## Data

The RARR data to be submitted to the data depository will consist of range (meters) and range-rates (meters/sec) measurements. As an indication of the quality of these data the standard deviation from the smoothing fit will be given; this value is tne estimate of the magnitude of the random error in the measurements. No other errors are included in this quality index.

Before submission to the data center the range measurements will be checked manually for reasonable compliance with the orbit. The range-rate data will be checked manually also, but only for gross errors.

## Errors

The major source of error in the ranging system is in the capability to maintain phase locking. The phase coherence can be maintained to $\pm$ 3.6 degrees by the phase lock loop circuits. At the highest sidetone frequency used (100 kc), this corresponds to an uncertainty in range of $\pm$ 15 meters. This error combined with the standard deviation from the smoothing is the measure of the range error to be made available.

The error in range-rate is approximately 0.1 m/sec.

## References


1. Vonbun, F. O., Analysis of the Range and Range Rate Tracking System: NASA - GSFC, August 11, 1961.

2. Watkins, E. R. and Rose, D. H., Description of the Goddard Range-Range Rate Data Processing Program for the CDC-160A.

3. Oosterhout, J., Private Communication.

Goddard Laser Experiment

## I. Timing

The timing of observations in the Goddard laser experiment is provided by a digital clock driven by a one megacycle (1 Mc) oscillator. The oscillator presently in use (Oct. 1965) has a stability of 1 part in $10^8$; it is anticipated that a new frequency standard with stability of 5 parts in $10^{10}$ will be incorporated into the system in the near future.

The new clock will be calibrated with WWV (UT 2) with corrections applied for propagation delay. The timing accuracy will be WWV (UT 2) $\pm$ 5 microseconds.

## II. General

It has been emphasized by the principal investigators on the Goddard Laser Experiment that for the purposes of GEOS A, the Goddard laser is not to be considered operational but experimental.

This experiment will eventually consist of two parts:

1. The measurement of the time delay between transmission of the laser pulse and the receipt of the reflected pulse from the retro-directive reflectors on the satellite. From this, range may be calculated.

2. The photographing of the reflected laser pulse with fixed mode PTH-100 cameras which will be used to determine the right ascension - declination and azimuth-elevation of the satellite. The PTH-100 is a modified (different mount) version of the PC-1000 which is being used by the Aeronautical Chart and Information Center.

The second part of this experiment is likely not to be operating in the early stages of GEOS A. When such data are available the preprocessing procedures will be identical with those outlined in this document for ACIC's PC-1000 optical tracking of the GEOS flashing lights.

## III. Hardware

Figure 1 is a schematic diagram of the electronics associated with Goddard ruby laser digital ranging system.

The basic operation is as follows:

The laser, aimed at the satellite, is fired at the rate of five pulses per second. At the initiation of each pulse a driver circuit starts the 100 Mc time interval unit. The reflected pulses are detected with a high gain photomultiplier tube which triggers another driver circuit. This driver pulse, if it is of sufficient amplitude, in turn triggers a threshold detector whose output pulse stops the time interval unit when the range gate is open. The time interval is then recorded on punched paper tape.

The aiming of the laser is accomplished by a computer driven tracking mount. The drive tape provided by GSFC to the laser group, gives the cartesian coordinates of the satellite at one minute intervals. This is translated by the investigators into a form which is more useful for the purpose of driving the tracking mount. In addition to the laser apparatus the tracking mount is equipped with an optical telescope whose output light is detected with a photodetector. During a pass where the satellite is sunlit or when a flashing light sequence is to occur, the output of the telescope photodetector indicates whether proper tracking is being accomplished. The pointing accuracy of the tracking system is $\pm$ 0.2 milliradians.

# PLANNED DIGITAL RANGING SYSTEM

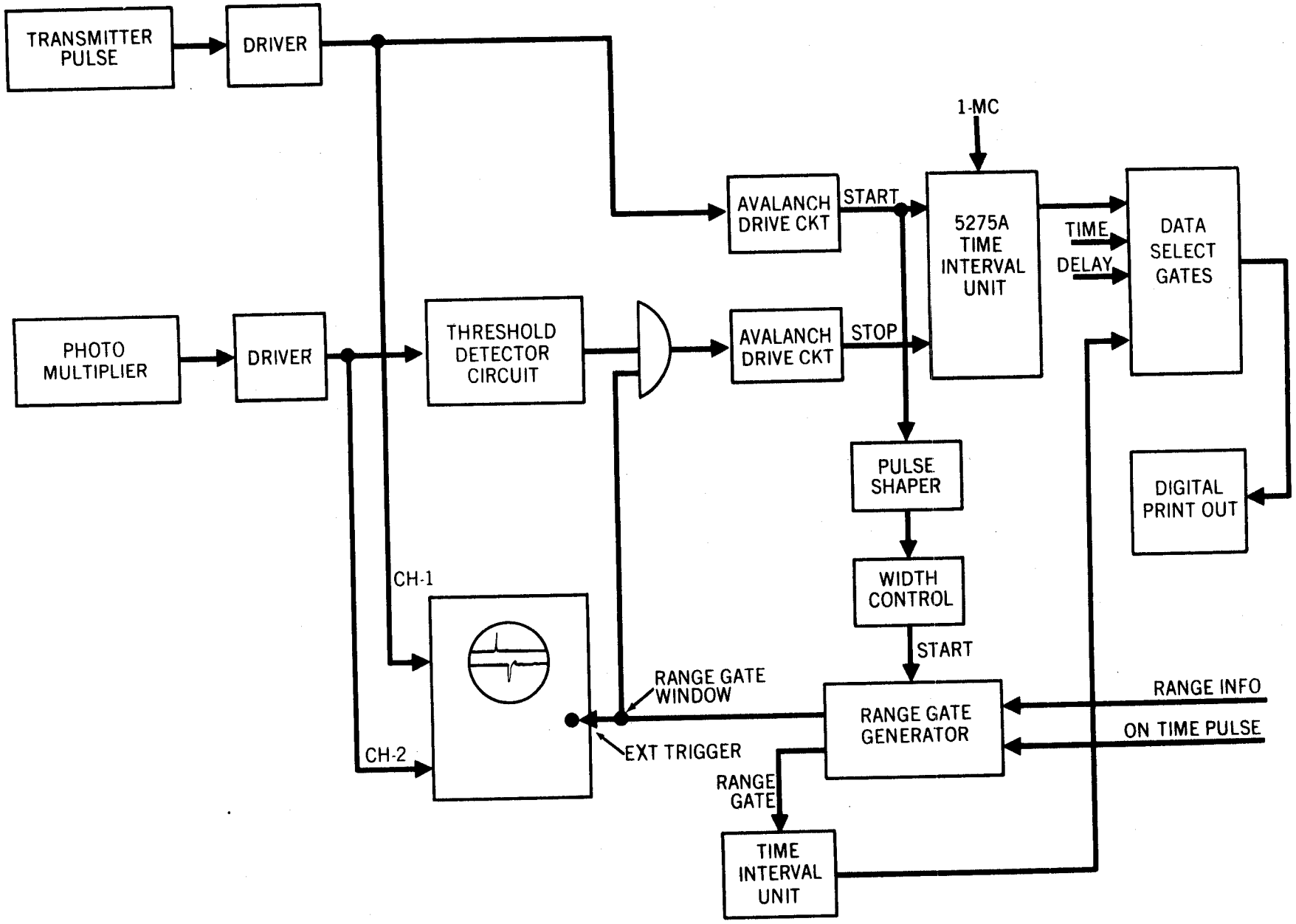


FIGURE 1

The laser light pulse has a rise time of the order of 1-2 nanoseconds and a full width at 10% (from the bottom) points of 13 nanoseconds. The dispersion of the light pulse has been found to be less than the resolution of the photodetector as would be expected.

The photomultiplier, EMI-9558A, has a transit time spread of the order of 15 nanoseconds which is the largest single source of error in the instrumentation.

The primary source of random noise in the hardware is the emission of photoelectrons from the cathode of the photo tube from background noise sources. The threshold detector in the photomultiplier leg of the circuit is set to trigger on a pulse from the detector just above the nominal noise level. To minimize false data from noise pulses, a range gate is provided. With the range gate in operation, it has been found that approximately 5% of the pulses triggering the detector are due to noise. These false data are removed in post flight preprocessing.

## IV. Calibration of Hardware

The calibration of the digital ranging system is carried out by measuring the range over a surveyed course. Calibration corrections are then applied in post-flight analysis.

### Processing of Data

As the laser system is not fully operational a detailed description of the process procedures has not been fully formulated.

### Editing

The only procedure which is now carried out is the removal of those time intervals measured which deviate by more than $\pm$ 1 microsecond from the predicted range. This corresponds to range residuals greater than 300 meters.

## References


1. Carrion, W., Goddard Space Flight Center, Optical Systems Branch, Private Communication.

2. Premo, D., Goddard Space Flight Center, Optical Systems Branch, Private Communication.

3. Johnson, T., Goddard Space Flight Center, Optical Systems Branch, Private Communication.

Army Map Service's

SECOR Range Data

## I. Timing

Two timing systems are used. These are as follows:

1. The Master station in a SECOR quadrangle instructs the satellite to re-transmit a special timing pulse every 50 milliseconds.* This pulse is received by all stations including the master. On reaching the stations the pulses cause the contents of each digital servo to be immediately recorded on magnetic tape. These ranges all correspond to the same time at the satellite.

   The difference in signal propagation time from the satellite to the various stations causes the servos at these stations to be dumped at slightly different times; this variation is usually less than 6 milliseconds. As this time marker is used only to identify a given range measurement (once every 50 milliseconds) this marker is sufficiently accurate.

   The Master identification signal also acts to synchronize the sampling of the four stations. This is done by setting the time delay between the receipt of the timing signal from the satellite and the sample time of the particular station to be 12.5 milliseconds for Slave 1, 25 milliseconds for Slave 2, and 37.5 milliseconds for Slave 3. This having been done initially, the range function qualities of the servos ( section II ) continuously and automatically maintain this synchronization.

---

* See reference 3.

2. Each SECOR station has a crystal controlled frequency standard which is checked daily with WWV. These operate time code generators which record UT2 time on magnetic tape each time the digital servos record the range on this tape providing an accurate time record. This clock has an accuracy of better than ± 2 milliseconds with respect to WWV.

The calibration of the frequency standard is corrected for radio propagation delay time.

## II. Hardware

SECOR determines range by measuring the phase shift between an up-link phase modulated carrier and two down-link phase modulated carriers. The up-link carrier and the high frequency down-link carrier are modulated with four frequencies while the low frequency down-link carrier has a single phase modulation frequency (585.533kc). Refer to table 1.

Carrier and Modulation Frequencies

Up-link carrier: 420.9Mc

Down-link carrier: 449.0Mc UHF
224.5Mc VHF

| Effective Modulation Frequency | Total Wavelength in Meters | Non-Ambiguous Range (Meters) | Resolution (Meters) |
|---|---|---|---|
| 585.533 kc | 512 | 256 | 1/4 (Very fine) |
| 36.596 kc | 8,192 | 4,096 | 16 (Fine) |
| 2.287 kc | 131,072 | 65,536 | 256 (Coarse) |
| 286 cps | 1,048,576 | 524,288 | 2,048 (Very Coarse) |
| Extended Range | | | |
| 20 cps | | 7,500,000 | 75,000 |

Table 1

The modulation frequencies are phase coherent and are derived from a temperature stabilized crystal-controlled oscillator of the James Knight type with a frequency of 1171.065 kc. The accuracy of the oscillator frequency is 1 part in $10^9$.

As the modulation frequencies cover too wide a range to be transmitted in this form, they are mixed as follows:

| | |
|---|---|
| D1 | 585.533 kc |
| D2 | 548.937 kc (Very fine - fine) |
| D3 | 583.245 kc (Very fine - coarse) |
| D4 | 549.223 kc (D2 + very coarse) |

These frequencies provide overlapping range measurements from which unambiguous range can be determined. (See Figure 1).

## RANGE OVERLAP

The following illustrates how the five channels overlap to make up the full range word.

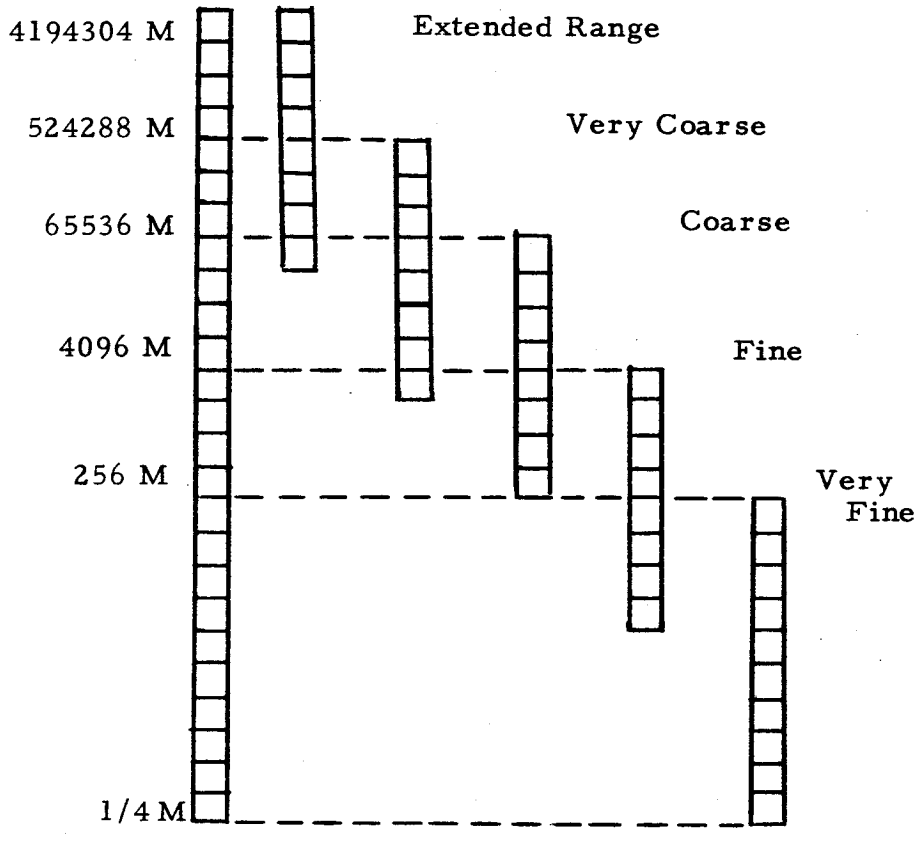


Figure 1

The extended range measurement is made by measuring the transit time for a pulse from each station to the satellite and back. This is carried out at a rate of 20 per second. This measurement is of low accuracy and is used only as a very rough estimate of the range in resolving ambiguities from the more accurate channels listed above.

A special Doppler loop circuit in the SECOR servos compensates for Doppler effects on the wave length. As a result no computational correction to the observed range caused by this effect is required.

Each station receives range information once every 50 milliseconds. The samples are made serially (Master, Slave 1, Slave 2, Slave 3); each station allotted 10 milliseconds to sample with 2.5 milliseconds buffer between each station sample.

Each servo maintains a range function versus time based on the Doppler shift and Doppler rate of the most recent range signal, updating the range in the servo between successive station samples. Thus, although the stations do not range simultaneously, the range function qualities of the servo combined with a common record signal from the satellite to all stations causes essentially simultaneous ranges to be recorded.

## III. Calibration of Hardware

Each SECOR ground station is calibrated prior to each tracking pass and immediately after each tracking pass. This is carried out in two steps:

1. A closed loop method which determines the zero-set calibration of the range servos.

2. An air link calibration made with a discone antenna driven by a test transponder used to determine the range over an accurately measured distance.

   Pre-mission and post-mission calibration have been found to agree quite closely in past runs.

The satellite transponder is calibrated pre-flight only. No capability to recalibrate the transponder in-flight is available.

## IV. Processing Data

### 1. Editing

The data are edited on a post-flight basis. The following criteria are used:

a. All four tracking stations in a quadrangle must be in phase-locked condition.

b. Tracking station must be tracking at an elevation angle greater than or equal to 30°.

c. There must be a series of ten or so unambiguous range measurements.

d. The first difference (range difference between two successive measurements) must progress smoothly over a number of measurements (approximately 10).

### 2. Packing and Editing

Following the editing of the raw data from each station, the data from the four stations is time synchronized and ranges are re-recorded in more compact form.

The packing process matches data from the stations on a common time base accepting discrepancies of up to 10 milliseconds.

The calibration corrections are applied to the edited data by averaging the calibration data taken pre-flight and post-flight for ground stations and correcting for satellite transponder delay.

3. Filtering

The only filtering to be carried out is that smoothing done by the digital servo in the SECOR tracker. The very-fine range servo response* is shown in Figure 2. It can be seen that the response of this servo drops to $\frac{1}{e}$ at about 1.5 cps.

4. Atmospheric Corrections

The SECOR data taken on GEOS will not have refraction or ionospheric corrections applied to it. There will be available the difference in range measured by the two down-link very fine range servos, so that corrections may be applied by the analyst, using the formulation of his choice.

* Cubic Corporation FTR/71-3

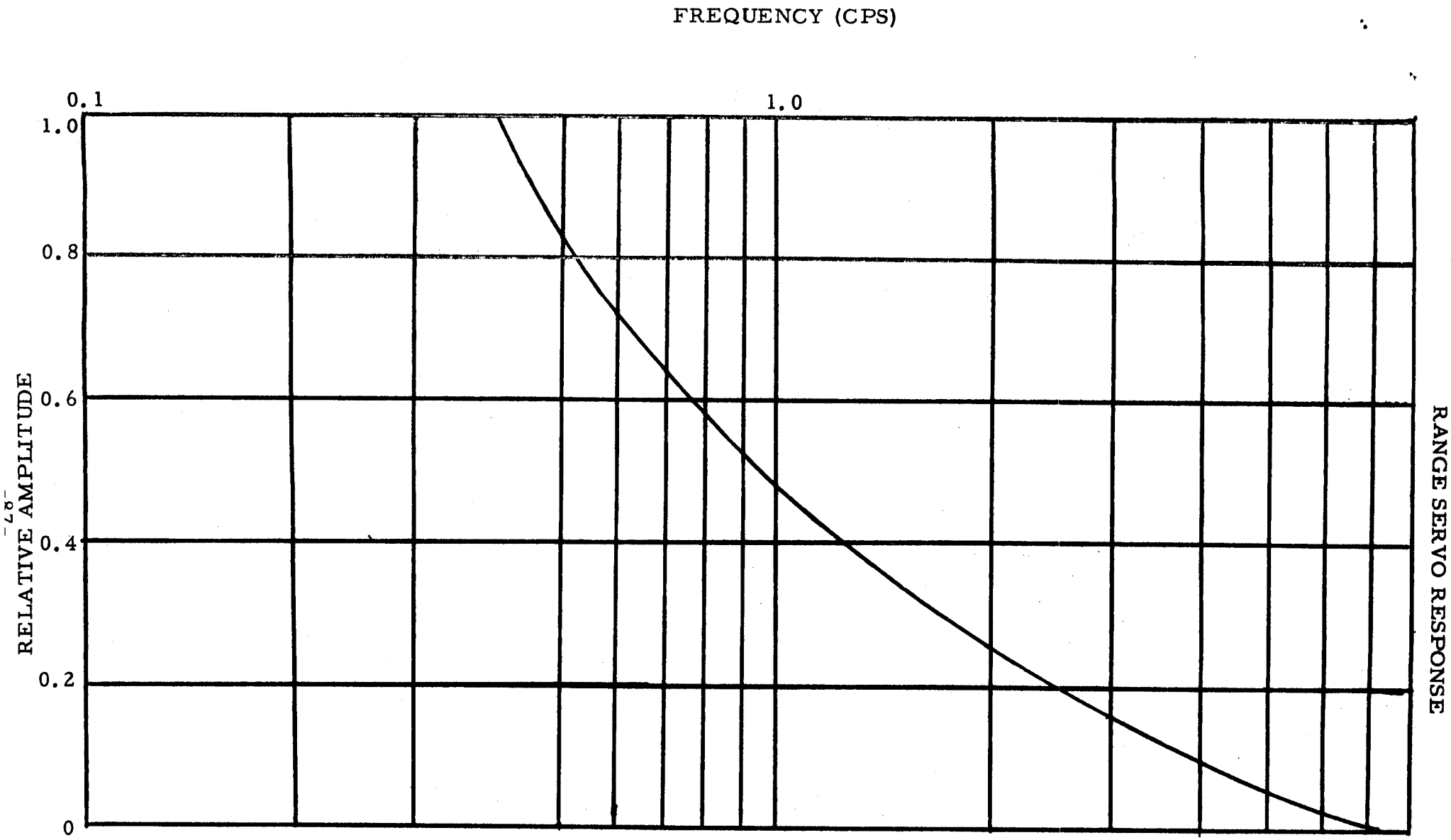
FREQUENCY (CPS)
0.1
1.0
1.0
0.8
0.6
0.4
0.2
0
RELATIVE AMPLITUDE
RANGE SERVO RESPONSE

Figure 2

## V. Data

The data to be made available by the Army Map Service will consist of the ranges (in meters) from each of the four SECOR tracking stations in a quadrangle, the first differences, the differences in range measured by the two down-link carriers and the time at the specific station when a given range was recorded. The correction of this time to satellite time for orbital determination purposes will be left to the user as will the determination of range-rate from the first difference.

## VI. Errors

The estimate of errors listed in Table 2 was taken from Cubic Corporation Final Technical Report FTR/71-3, and resulted from the most recent evaluation of the geodetic SECOR System.

The range errors to be submitted to the Data Center will be the range residuals only. These residuals are calculated by assuming that there is no error in the range measured by the three known stations in a quadrangle and the difference between the measured range and calculated range to the unknown station is called the range error. No attempt to separate this error into bias and random error will be made.

In the listing of errors in Table 2 an arbitrary selection of 0.01 cps (period 100 seconds) was made as the dividing line between random and bias errors.

TABLE 2

RANGE ERROR SUMMARY

| Error Source | Random Error | Bias Error |
|---|---|---|
| 1. Ground Station Calibration | | |
| a. Calibration distance, D | None | ± 0.1 m |
| b. Test transponder calibration, L | ± 0.1 m | ± 1.0 m |
| c. Test transponder calibration | ± 0.75 m<br>± 0.67 m | ± 1.0 m (UHF)<br>± 2.0 m (VHF) |
| d. Calibration zero-set | ± 0.34 m<br>± 0.53 m | None (UHF)<br>None (VHF) |
| *e. Discone calibration antenna phase pattern | | |
| *f. Multipath along calibration path | ± 1.36 m<br>± 1.88 m | Unknown (UHF)<br>Unknown (VHF) |
| *g. Variable delay in ground station outside calibration loop | | |
| RSS for Ground Station Calibration | ± 1.50 m **<br>± 2.17 m ** | 1.41 m (UHF)***<br>2.24 m (VHF)*** |
| * Computed based upon observed RSS for ground station calibration | | |
| ** Observed | | |
| *** Computed from values in this table | | |
| 2. Satellite Calibration | | |
| Satellite antenna | ± 0.7 m | Unknown |
| Satellite transponder delay (estimated positive bias) | ± 0.55 m<br>± 1.35 m | + 1.95 m (UHF)<br>+ 2.34 m (VHF) |
| 3. Equipmental, observed | 2.2 m | --- |
| Total RSS (1, 2, 3) | 2.8 m | 2.4 m (UHF) |
| Total Observed RSS | 2.7 m | --- |
| Combined RSS random and bias error = 3.6 m | | |

## References


1. Early, E., Army Map Service, Washington, D. C.

2. Cubic Corporation, Final Technical Report, Geodetic SECOR Range Accuracy Study FTR/71-3.

3. Prescott, Major N. J. D., RE, Experiences with "SECOR" Planning and Data Reduction: Paper presented to the International Association of Geodesy, Symposium of Electronic Distance Measurement, 6-11 September 1965.

Air Force Cambridge Research Laboratory Laser Experiment

## I. Timing

The timing reference for the AFCRL laser experiment is LORAN C (UT 2). This time is corrected for propagation delay time to a given station. The accuracy after correction for propagation time is $\pm$ 50 microseconds. The station time is derived from a 1 MC oscillator drived digital clock.

## II. General

This laser experiment is not considered to be operational by the principal investigators. It is felt that GEOS A participation will be on an experimental basis only.

## III. Hardware

The AFCRL laser will be used as a ground based satellite illumination device located at Bedford, Massachusetts, the reflected laser pulse being photographed with PC-1000 cameras. The results of measurements made in this way will be presented in terms of satellite azimuth and elevation.

As the laser acts only as a light source with the cameras as the detection devices, the hardware is essentially that described in this document for PC-1000 optical tracking. The single matter of laser aiming will be discussed here.

At present the laser is aimed by a calibrated, manual driven mount. The azimuth and elevation information necessary to effect this aiming will be provided by Goddard Space Flight Center to AFCRL. The accuracy with which the aiming can be accomplished is 2 minutes of arc. The digital clock is programmed to fire the laser based on the information furnished by Goddard Space Flight Center. The percentage of successful shots, that is how often reflection from the satellite occurs, will depend on the accuracy of the look-angle information. Initially, a maximum of two observations per satellite pass is expected.

Future plans include a tracking capability to be added to the experiment. This will allow the investigators to acquire seven observations per satellite pass.

Presently no uncertainties due to possible instrumentation biases are assumed for the laser portion of this experiment.

## IV. Processing

The processing procedure, which is a plate reduction problem, is that outlined in this document for the ACIC PC-1000 cameras. This reduction will be done by ACIC for AFCRL.

## References

1. Hadgigeorge, George, AFCRL, Private Communication.

2. Kuykendall, Leroy, ACIC, Private Communication.

## I. General

With a sufficient number of Doppler vs. time measurements for a satellite, the orbit can be computed. The procedure is to beat the Doppler frequency against a reference frequency maintained at the local station. The basic quantity measured at a tracking station is the time (T) to count a preset number of beat cycles ($n_c$) between the effective frequency, $f_e$ (the frequency received from the satellite), and the local oscillator reference frequency, $f_r$. If t is the time at which a beat cycle count is initiated, the effective time of measurement, $t_e$ is given by *

$$(1) \quad t_e = t + \frac{1}{2} T$$

and the effective frequency received from the satellite is

$$(2) \quad f_e = f_r - \left(n_c / T\right)$$

During a satellite pass, the Doppler frequency takes on values both above and below the value it has when at rest relative to the station. Since there is no way of attaching a sign to the beat frequency, this would lead to ambiguity. Therefore, the satellite frequency is deliberately made different from the ground frequency by an amount greater than the largest possible Doppler shift.

In actual practice two frequencies are emitted by the satellite and both are beat against appropriate reference frequencies. This is done so that a correction for the effect of ionospheric refraction can be made.

* Equations (1) and (2) are only approximate. The errors are due to the basic digitalization process discussed in Section III. B. 4. See reference 4, page 5 - 11.

## II. Timing

A ground station with a stable reference local oscillator need receive only a few time signals per day to maintain timing accuracy. Therefore, only two or three satellites need contain clocks. All of the stations are now (December, 1965) equipped to use satellite timing.

The satellite clock consists of a counter that counts cycles of a stable one megacycle oscillator. The oscillator typically has a short term stability of $10^{-11}$ or better and a long term drift (due to the aging rate of quartz crystals) of between $2 \times 10^{-10}$ and $2 \times 10^{-11}$ per day.

The station clock is calibrated with WWV (UT2) with corrections applied for propagation delay from transmitter to station. The timing accuracy is $\pm 1$ millisecond.

## III. Hardware

In figure 1 a block diagram of the frequency and timing equipment in a Doppler geodetic satellite (containing a clock) is exhibited. Figure 2 exhibits the corresponding equipment at a ground station. It has been simplified by omitting the dual - frequency refraction correction.

### A. Satellite Equipment

#### 1. Satellite Oscillator

The stability of the oscillator has been discussed above. The factors limiting stability are vibration, voltage changes in the power supply, and temperature changes. Vibration is eliminated if the satellite has no moving parts. Voltage changes are combatted by the use of a precise voltage regulator. By elaborate insulation and thermostatic control techniques the long-term temperature fluctuations can be kept to within $0.1^{\circ}$ C and the short - term fluctuation to within $0.001^{\circ}$ C.

Block Diagram of Frequency and Timing Equipment in the Doppler Geodetic Satellites

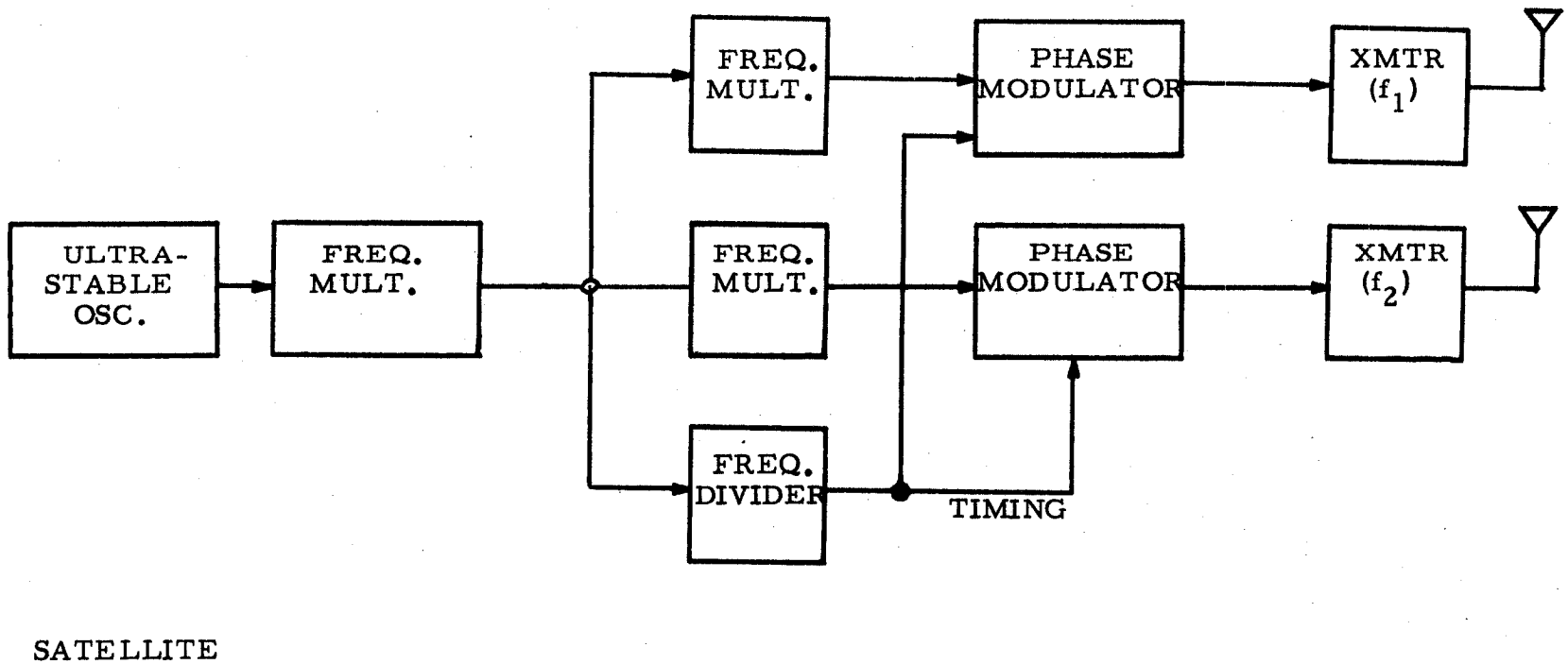


Figure 1

Block Diagram of Frequency and Timing Equipment in the Tranet Ground Stations

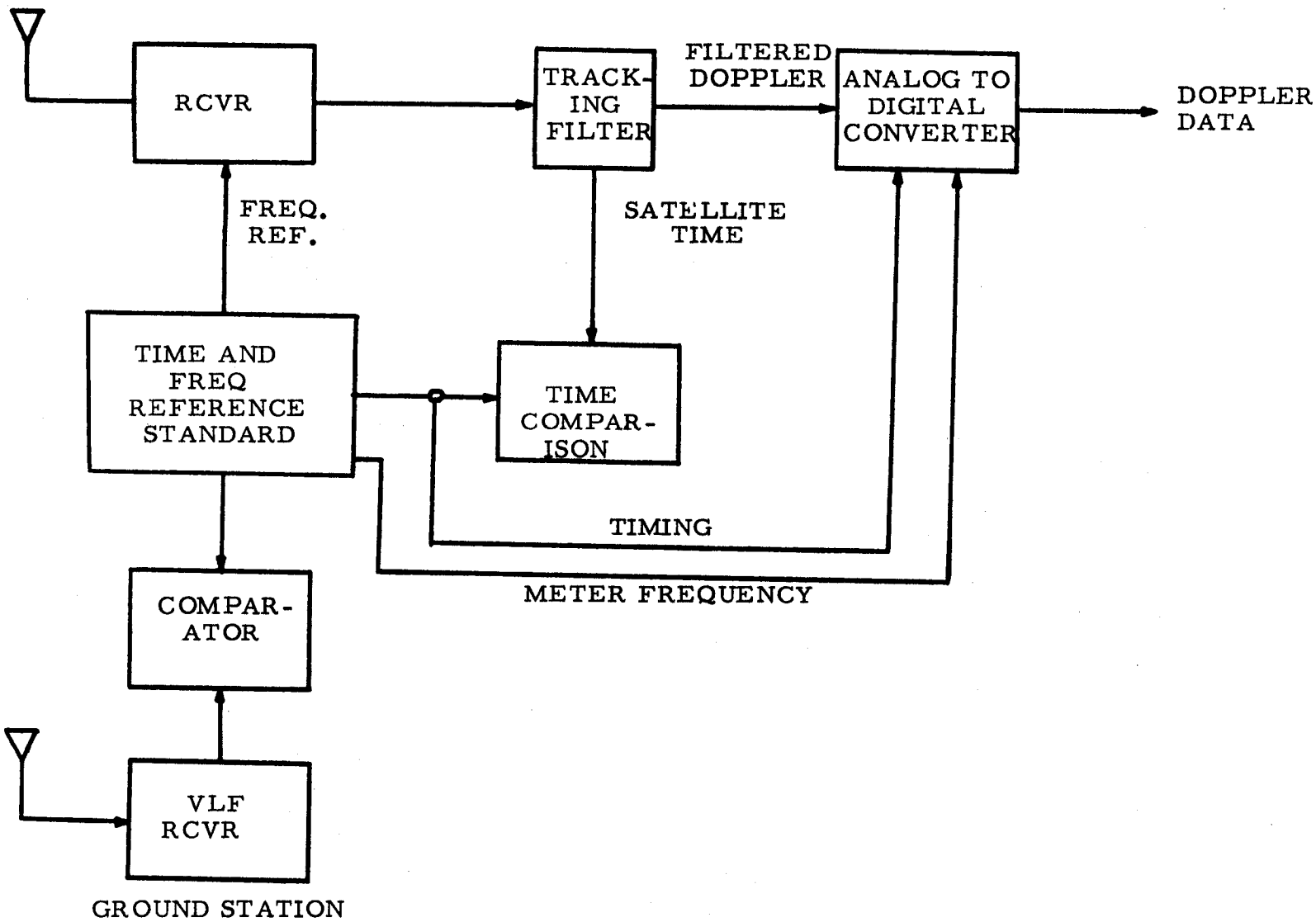


Figure 2

2. Other Satellite Equipment

The oscillator output is frequency multiplied and also divided, if it has a clock, and then transmitted via the two satellite transmitters. The multipliers and the transmitters must maintain high phase stability. This is accomplished by the use of high Q circuits and tight phase comparison and feedback circuits.

The frequency dividers have less stringent and, therefore, easily achieved phase stability requirements (tens of microseconds). The purpose of the frequency divider is to reduce the fundamental frequency to one that can be counted. When a preset number of cycles has been counted, the phase of one of the Doppler frequencies is advanced for a few milliseconds, followed by a balanced phase retardation, and then a return to normal phase. The entire modulation pattern is repeated continuously for a fixed time of the order of one second. It is then off (normal phase) for a fixed time, of about one minute. This time interval puts the signals far enough apart so that they can easily be distinguished from each other. The time marker is either a specified pattern of bits or a phase reversal in the modulation pattern. It is applied periodically at time intervals of one minute.

B. Ground Station Equipment

1. Frequency and Clock Standards

The stations use whatever frequency and time transmissions they can satisfactorily receive. The Howard County, Maryland, station uses two cesium standards and several quartz standards all monitored with respect to each other and with respect to several VLF transmissions. The frequencies used are 54 Mc, 150 Mc, 162 Mc, 216 Mc, 324 Mc, and 400 Mc and are accurate to a few parts in $10^{11}$ per day. The cesium standards are monitored against WWV for time.

2. Tracking Filter

The received satellite frequencies are each beat against the appropriate frequency from the station standard, giving a beat note in the range of tens of kilocycles. This beat frequency is then sent through a tracking filter. A tracking filter is a narrow pass filter with a band width ranging from 1 cps to 50 cps. Its center frequency automatically adjusts itself to the received frequency. One can then receive with an effective noise band width of a few cycles even though the Doppler shift is many kilocycles.

3. Ionospheric Correction Unit

The outputs from each of the tracking filters next enter the refraction correction unit. The correction is a first-order correction (in powers of inverse frequency). If f is one of the satellite frequencies then $f_D$ its Doppler shift

including ionospheric refraction is given by

$$(3) \quad f_D = \frac{\dot{\rho}}{c} f + \frac{a_1(t)}{f} + \frac{a_2(t)}{f^2} + \ldots$$

where $\dot{\rho}$ is the range rate,

$c$ the velocity of light in vacuum, and the

a's are functions of time independent of frequency

The first term on the right is the vacuum Doppler shift. By using a second frequency two equations (for the two Doppler shifts) are obtained and can be solved for the vacuum Doppler shift, neglecting higher order terms. To evaluate the next higher order term would require three satellite frequencies.

4. Analog to Digital Converter

This converts the received Doppler frequency to digital form. A clock pulse enters a gate permitting the Doppler signal to enter the preset counter. Positive-going zero crossings of the signal are detected. When $n_c$ events are counted the gate is closed. The time for this is measured using a "meter frequency" from the frequency standard. $n_c$ is chosen so that the time interval be just less than one second. Measurements are usually taken every four seconds. The time measurement can be read to a precision of one microsecond or better.

## IV. Processing

The data reduction program accomplishes the following objectives:

1. Extracts the satellite passes of interest from master tapes.

2. Detects and eliminates observations containing gross abnormalities or format errors.

3. Computes the approximate effective time and frequency of an observation using equations (1) and (2).

4. Applies calibration corrections to frequency and time.

5. Prepares observations in a form acceptable to the filtering programs.

To filter out bad observations a preliminary orbit based on the preceding day's observations is computed. The frequencies corresponding to this orbit are calculated for each observation time. A least squares solution for the observed and calculated frequency differences is developed in which the satellite frequency and a fictitious station position are varied to minimize the residuals. Observations that are greater than 2.5 times the rms of the residuals are rejected. The process is then repeated with the remaining data. The rejection of data in this way is valid only if the set of points discarded is stable with regard to iterations and only if it represents a small part of the total data. Tests are also made to determine if the entire pass may be bad. Note that no correction is made for tropospheric refraction or for ionospheric refraction beyond the first order correction.

## V. Data

The data, as currently available, consist of time and frequency observations. The time measurement is given in year, month, day, hour, minute, second and the frequency in cycles per second (cps). The time is accurate to one millisecond and the frequency to 0.005 cps. The standard deviation of the frequency is given, also, to 0.01 cps. All frequency measurements are scaled to 108 megacycles by multiplying by $108 \times 10^6/f_r$.

## VI. Errors

The error is most conveniently expressed in terms of the error (standard deviation) in a measured position. The errors can be grouped into three classes.

1. instrumental errors
2. errors due to propagation effects
3. limitations due to the configurations of ground stations and of satellite orbits

1. Random errors in frequency measurements result in position errors of about 8 meters. Timing errors tend to be systematic. They have been as high as 15 meters but with the use of satellite timing this error will be reduced to 3 meters or less.

2. Uncorrected tropospheric and ionospheric refraction each give rise to errors of about 3 meters. The ionospheric error could be an order of magnitude greater during maximum solar activity unless appropriate corrections are applied.

3. Incomplete information as to the gravity harmonics of the earth is presently the largest source of error, being responsible for an error of 75 meters. It has been estimated that this error can be reduced to 10 meters only when all harmonics through degree 16 or more are known.

## References


1. Anderle, R. J., June 1965, Doppler Observations on the Anna 1B Satellite: Transactions, American Geophysical Union, Vol. 46, No. 2.

2. Guier, W. H., Newton, R. R., and Weiffenback, G. C., January 1965, Analysis of the Observational Contributions to the Errors of the Navy Satellite Doppler Geodetic System: Applied Physics Lab. Report TG-653.

3. Description of the Doppler Tracking System "Tranet", Johns Hopkins University Applied Physics Laboratory, May 1963.

4. Transit Orbit Improvement Program, Applied Physics Lab. Report TG-401, Vol. 1, March 1961.

5. Anderle, R. J., U. S. Naval Weapons Laboratory, Private Communication.

6. Guier, W. H., Applied Physics Laboratory, Private Communication.

7. San Lwin, G., Applied Physics Laboratory, Private Communication.