https://ntrs.nasa.gov/search.jsp?R=19660024120 2018-07-24T17:55:19+00:00Z

NsG-100

UNPUBLISHED PRELIMINARY DATA

# EXPERIMENTAL X-RAY STRESS ANALYSIS PROCEDURES FOR ULTRA HIGH STRENGTH MATERIALS

by

H. R. Woehrle, F. P. Reilly III, W. J. Barkley III,

L. A. Jackman, and W. R. Clough*

A Paper to be Presented at the "Annual Conference on Applications of X-Ray Analysis", Denver Research Institute, University of Denver, August, 1964

N66 33410

(ACCESSION NUMBER) (THRU)

24 1

(PAGES) (CODE)

CR-59602 17

(NASA CR OR TMX OR AD NUMBER) (CATEGORY)

FACILITY FORM 602

*Staff Members and Faculty Member, Respectively, Department of Materials Engineering, Rensselaer Polytechnic Institute, Troy, New York

GPO PRICE $ _____

CFSTI PRICE(S) $ _____

[redacted]

Hard copy (HC) 1.00

Microfiche (MF) .50

ff 653 July 65

## ABSTRACT

Quite recently there have been commercially developed a series of high-alloy steels, on new compositional bases, which possess a very desirable combination of unusually high strength, good ductility, and toughness even at comparatively low temperatures. At the same time research with mechanical working procedures, combined with optimum heat-treat considerations, have produced with several older, more conventional steels, strength levels of high orders of magnitude. Each of the considered materials is capable of yield strengths approaching or exceeding 300,000 psi, corresponding to elastic strains of about one per cent.

This paper is concerned with the development and evaluation of workable X-ray stress analysis procedures to be employed to measure, with a good degree of accuracy, high elastic strains. The materials selected include Maraging steels, ausformed steels, and cold drawn A.I.S.I. 4340 steels.

Of the various possible X-ray techniques which were considered, very satisfactory results were obtained by the use of the two-exposure method. A special fixture was designed and constructed to allow uniaxial straining of test specimens while in the X-ray unit. Imposed strains were measured directly by strain gages mounted on the specimen. Simultaneously, strains

[redacted]

were measured by the use of chromium radiation filtered with vanadium foil. The peak resolution obtained was very satisfactory with a peak to background ratio of approximately 4:1 for the $\{211\text{-}121\}$ martensite doublet used to measure the shift in peak location between the normal and oblique exposures. Because of the widths of the peaks involved, it is impossible to precisely specify the angular position of a given peak by inspection of the usual recorded trace. A counting technique, combined with a least squares curve fitting procedure involving five points, was very satisfactory for precisely locating positions of maximum intensity. Superior results were obtained when a multiplicative correction factor proposed by Koistinen and Marburger was applied.

## INTRODUCTION

With the advent of the space age, supplemented by outstanding engineering developments with reactors, nuclear submarines, rocket cases, etc., an unusual demand has been placed on the design and fabrication of structural materials with exceptional strength to weight ratios. Although a number of very promising alloys have been developed on several elemental bases, some of the most outstanding accomplishments have been those within the steel industry. At this time there are available

several steels characterized by yield stresses of the order of 300,000 psi, corresponding to elastic strains of about one per cent, and with high strength these alloys combine a considerable degree of desirable ductility and toughness even at cryogenic temperatures. More conventional alloy and tool- and die-steels have had their room temperature strength properties further enhanced by the development of new mechanical working procedures and heat-treat considerations. The purpose of the experimental work described in this paper was the development and evaluation of workable X-ray stress analysis procedures to be employed to measure, with a high degree of accuracy, the considerable elastic strains which will be encountered with high-strength steels.

The large amount of activity that has been devoted towards X-ray techniques in the measuring of stresses can be attributed to several unique features. X-rays represent one of the few methods whereby internal stresses may be measured nondestructively. The X-ray beam can be made to strike only a small area of the specimen, thus enabling localized stress and steep stress gradients to be investigated. Also, the stress condition of the surface, which is of major importance to fatigue, stress-corrosion, and other mechanical and metallurgical phenomena, can be determined.

Of the several X-ray techniques which have been used in research and industrial applications, the two-exposure method

utilizing a diffractometer has received the widest application. The relative stress determined by this technique has been found to have a precision of 4000 to 5000 psi[1] at the lower and more conventional stress levels encountered with most constructional steels and alloys. However, it is desirable to know if the two-exposure technique is valid at the large elastic strain levels to be encountered with the previously mentioned super strength steels.

In the two-exposure technique the desired component of stress in and parallel to the specimen surface is determined from two exposures, one with the diffractometer aligned in its normal position and the other with the specimen inclined at an angle $\psi$ from its normal position. The pertinent geometry of the second exposure is indicated schematically by Figure 1. The two exposures allow the respective determination of the diffraction angles $2\theta_{\perp}$ and $2\theta_{\psi}$, which represent the distances between those atomic planes in the surface whose normals are perpendicular to the specimen surface and at an angle $\psi$ to the specimen surface, respectively. The desired component of stress $\sigma_{\phi}$ is related to those two parameters by the following expression:

$$\sigma_{\phi} = \cot\theta \left(\frac{E}{1+\mu}\right)\left(\frac{1}{\sin^2\psi}\right)\left(\frac{2\theta_{\perp}-2\theta_{\psi}}{2}\right) \quad (1)$$

where E is the elastic (Young's) modulus and $\mu$ is Poisson's ratio.

If it is assumed that Cot $\theta$ is a constant, then Equation 1 may be simplified to give:

$$\sigma_\phi = K(2\theta_\perp - 2\theta_\psi) \qquad (2)$$

The proportionality constant "K" is referred to as the stress factor and should be constant for a given crystalline material. When measuring stresses the shift in $2\theta = (2\theta_\perp - 2\theta_\psi)$ is multiplied by the stress factor to obtain the applied or residual stress, or combination of both, as indicated by Equation 2.

The form of Equation 2 shows that a plot of stress against the shift of $2\theta = (2\theta_\perp - 2\theta_\psi)$ should yield a straight line, and the slope of this straight line is the stress factor "K". Consequently such a plot serves as a criterion to determine the validity and accuracy of the two exposure method. If the experimental technique is not valid and accurate at the very high stress levels involved in this investigation with ultra high strength materials, then a deviation from linearity will be observed.

## MATERIALS

A total of twelve different samples were investigated. The steels from which the samples were prepared fall into three general categories. The analyses of these steels, as given by the supplying concerns, are shown in Table 1.

Several grades of Maraging steels are designed on iron-nickel- cobalt- aluminum- titanium bases; the development and evaluation of the alloys has received a great deal of attention in the very recent engineering and metallurgical literature. On air cooling from appropriate temperatures the structure of the alloys is essentially a carbon-free body-centered-cubic iron-nickel martensite. Unlike the comparatively hard, brittle, martensite of the more conventional low-alloy steels, the Maraging steel martensite is soft and readily machined and formed. Strength properties are further improved by a second "Maraging" heat treatment during which the alloy is strengthened by precipitation[2] and probably also by the occurrence of an ordering reaction. Three Maraging steels of differing compositions, produced and supplied by the Vanadium Alloys Steel Company and known as Vascomax 250, Vascomax 280, and Vascomax 300, have been included in the described experimental program.

Untempered, fully hardened, martensitic 4340 alloy steels have been successfully cold reduced up to ten per cent by research procedures developed by Dr. N. N. Breyer,[3] Manager of Technical Projects, LaSalle Steel Company. As a result of considerable research, experimental drawing procedures have been perfected which result in cold-worked materials with yield strengths as high as 400,000 psi coupled with about a 30 per cent reduction in area as determined by tensile tests. Four

samples supplied by Dr. Breyer, involving 0, 3.96, 5.98, and 10.57 per cent cold work, have been included in the X-ray program.

By the use of techniques which have come to be known as "ausforming", very high strength martensitic steel may be obtained. The procedures consist of strain hardening austenite prior to the martensitic transformation. The strength of the martensite formed from the deformed austenite will be governed by the degree of deformation and by the temperature at which the deformation is accomplished. A total of five different samples prepared under the direction of Dr. W. M. Justusson[4] of the Scientific Laboratories, Ford Motor Company, have been subjected to X-ray stress analysis procedures. Involved are three commercial steels known as Ladish D-6AC, Vascojet 1000, and Heppenstall 5M21, and austenite deformations of 50, 78, 83, 90 and 92 per cent are represented by the five different samples.

Materials were received in the form of rod in excess of one-half inch diameter. With the 4340 and ausformed steels no metallurgical operations were accomplished in the writers' laboratories; however, heat treatment of the Maraging steels was done in R.P.I. facilities. From the hardened rods, bars about 1/10 inch thick, 1/2 inch wide, and 8 inches long were prepared by surface grinding. Care was taken to insure that heating of the specimens did not occur so that no further metallurgical reactions would take place. After surface grinding all test

specimens were hand polished through three grades of emery paper, and as a last operation an acid pickle and dip was utilized to remove disturbed metal surfaces.

## EQUIPMENT

In the present investigation a special fixture was designed and constructed to allow uniaxial straining of test specimens while in the X-ray unit. The fixture places the steel beams in a state of pure bending, and the X-ray measurements are then taken on the tensile side of the beams. The actual stress at the surface of the test specimens was obtained from strain readings taken from attached wire resistance SR-4 type strain gages. The fixture is rather similar to that used in the X-ray laboratories of Professor J. T. Norton at the Massachusetts Institute of Technology and utilized by Professor R. E. Ogilvie;[5] a description of a somewhat similar fixture has been given by Maloof and Erard.[6] In the present investigation the fixture had to be of considerably greater strength and flexibility so as to accommodate the high elastic strains which were encountered with the super strength alloys. X-ray measurements were performed with a Philips Norelco diffractometer equipped with a Philips geiger counter and associated electronic controls.

## EXPERIMENTAL PROCEDURES

The basis of the experimental procedures consists of applying

a known stress and then measuring the corresponding shift in $2\theta$ in order that the behavior of the stress factor may be observed. Chromium radiation filtered by vanadium foil was used since it results in a superior peak to background intensity ratio relative to other possible target materials such as cobalt or iron. A peak to background ratio of about 4:1 was attained for the $\{211-121\}$ martensite doublet used to measure the shift in peak location between the normal and oblique exposures. This peak was selected because of its high angle location (about 156° for $2\theta$) when chromium radiation is used; the high angle contributes to the accuracy of the measurements. Also, a high diffracted intensity level is associated with the peak.

The angle of inclination for the oblique exposure was 60°, which was found to give a maximum sensitivity consistent with the practical limitations involved with rotating the specimen for the oblique exposure.

As is always the case, inclination of the specimen for the oblique exposure destroys the focusing conditions inherent in the use of a diffractometer goniometer. The point of focus is shifted toward the specimen from the receiving slit along a diameter of the goniometer circle, resulting in a substantial reduction in the measured intensities due to the divergence of the beam at the point where it enters the receiving slit. The superior solution to this problem is to move the entire counting

and receiving slit assembly forward to the new focus point. Since such an operation is not possible with the available equipment, an alternate method found to be satisfactory by Ogilvie[5] was employed. This method consists of mounting a receiving slit at the new focus point, removing the usual receiving slit, and leaving the counter in its original position. A 0.060 inch wide receiving slit was used in all cases, since by admitting a larger portion of the diffracted beam, a higher intensity was obtained. The relatively large width of the receiving slit is not excessive in view of the extreme line broadening encountered. The X-ray tube was operated at 38 kv and 8 ma throughout the course of the experiments.

As is typical of fine grained, hardened, martensitic steels, the diffraction peaks were too severely broadened to permit precisely specifying the angular position of a given peak by inspection of the usual recorded trace. This difficulty can be overcome by noting that at diffracted intensities greater than approximately 85 per cent of the peak intensity the shape of the peak is very nearly parabolic. Consequently, the diffracted intensity can be measured at several angles in this range by determining the time for a given amount of photons to be diffracted and by then mathematically fitting a parabola to these points. The calculated vertex position is then taken as the true peak location. Ogilvie[3] developed such a parabola fitting method

whereby five data points are obtained at equal 2θ intervals about the intense region of the diffraction peak and the parabolic curve fitted by the method of least squares. A method which involves simpler computations and less measuring time by fitting a parabola to only three data points has been developed by Koistinen and Marburger.[7,8] In the present investigation the Ogilvie method was used since it was found to yield more accurate and reproducible results. All points were determined using a fixed count procedure with 102,400 counts.

A further difficulty associated with the severely broadened diffraction peaks is assymetry due to certain intensity factors which vary with θ, since the width ranges from eight to ten degrees (2θ) at one-half the maximum peak intensity. Koistinen and Marburger[7,8] have proposed multiplicative correction factors which are applied to each individual intensity measurement. The correction factor for the normal exposure consists of the Lorentz-Polarization factor which takes into account the pertinent geometrical factors and the fact that the incident X-ray beam is not polarized. The correction factor for the oblique exposure includes an absorption factor in addition to the Lorentz-Polarization factor. In the present investigation utilization of these correction factors was found to considerably improve the raw data.

Stress was applied to the specimen, mounted in the X-ray unit, by means of the previously mentioned uniaxial bending

fixutre. Seven stress levels were applied to each specimen; increments of 50,000 psi were taken from zero to a maximum of 300,000 psi. The value of the applied stress was determined from the output of two wire resistance strain gages mounted in series on the surface of the specimen, one on each side and about one-half inch removed, from the center region of the beam exposed to the X-rays. The strain gages were checked for individual accuracy prior to being connected in series.

## RESULTS AND DISCUSSION

Should the two-exposure method become less accurate at high stress levels, the stress factor would be expected to become functionally dependent on the value of the stress. A method of determining if the stress factor "k" is a function of stress consists of the construction of a plot of known stress versus the shift in $2\theta = (2\theta_{\perp} - 2\theta_{\psi})$. As evidenced by Equation 2, a straight line with a slope equal to the stress factor will be obtained if the stress factor is independent of stress while non-linearity would indicate a dependence of the stress factor on the stress. Such plots made for all twelve materials dealt with in this investigation showed linearity to stresses of 300,000 psi or to the onset of plastic deformation. A typical plot is shown in Figure 2.

The left stress ordinate in Figure 2 is the stress indicated

by strain gages, while the right stress ordinate is that applied stress plus the residual stress in the surface of the specimen at the spot of incident X-rays. The residual stress is determined as the applied stress necessary to make the shift in $2\theta$ equal to zero, which is the condition for zero stress. Due to the grinding operations, the previous plastic deformation inherent to cold work and ausforming, and deformation introduced by the martensite reaction, all specimens had a positive residual stress the first time they were tested. Yielding during the course of X-ray stress investigations was readily observable as it resulted in a sharp break in the plot of stress versus the shift in $2\theta$ due to the small increase in the shift with increasing stress during plastic flow.

The above mentioned plots for the twelve considered materials were combined into the three master plots designated as Figures 3, 4, and 5 which are for Maraging steels, cold worked fully hardened 4340 steels, and ausformed steels, respectively. Each of these plots has been normalized for the variations in the stress constant by multiplying each measured shift in $2\theta$ for each material by the ratio of its stress factor to the lowest stress factor in the given group of materials. Also, the curves have been normalized with respect to vertical displacements resulting from differences in residual stress levels.

A straight line can readily be fitted through the data given

in Figures 3, 4, and 5 without any indication of a trend toward nonlinearity. Consequently, it may be concluded that the stress factor does not vary at high stresses and the two-exposure technique is applicable to stress analysis even at ultra high stress levels.

The stress constants for the various materials, determined from the slopes of the plots such as Flgure 3, are listed in Table II.

## CONCLUSIONS

The two-exposure X-ray technique can be successfully used to measure elastic strains, and hence stresses, up to the onset of plastic deformation when investigating ultra high strength steels. The results obtained are apparently not affected by the presence of a martensite reaction, a precipitated phase, wide variations in chemical analysis, the presence of considerable cold work, or the accomplishing of previous plastic deformation in the austenitic range (ausforming).

The parabola fitting technique developed by Ogilvie[5] and the intensity correction factors introduced by Koistinen and Marburger[7,8] are applicable over a very large stress range and at high stress levels such as 300,000 psi.

The stress factor determined at low stresses for a given material may be applied to the measurement of high stresses in

that material since the stress factor has been found to be independent of stress.

## ACKNOWLEDGEMENTS

The cooperation and help given by personnel of the Scientific Laboratory of the Ford Motor Company, Vanadium Alloys Steel Company, and the LaSalle Company is greatly appreciated. A part of the work described in this paper was made possible by a grant received from the National Aeronautics and Space Administration.

## REFERENCES


1. Christenson, A.L., editor, "The Measurement of Stress by X-Ray", Society of Automotive Engineers, Information Report TR-182.

2. Pittler, K., and G. S. Ansell, "Precipitation in a High Nickel Maraging Steel", Transactions of American Society for Metals, Vol. 57, No. 1, March, 1964, pp. 220-246.

3. Breyer, N. N. and N. H. Polakowski, "Cold Drawing of Martensitic Steels to 400,000 psi Tensile Strength", Transactions of American Society for Metals, Vol. 55, No. 3, Sept., 1962, pp. 667-684.

4. Justusson, W. M. and D. J. Schmatz, "Some Observations on the Strength of Martensite Formed from Cold Worked Austensite", Transactions of American Society for Metals, Vol. 55, No. 3, Sept., 1962, pp. 640-653.

5. Ogilvie, R. E., "Stress Measurements With X-Ray Spectrometer", M. S. Thesis, Massachusetts Institute of Technology, Metallurgy Department, 1952.

6. Maloof, S. R. and H. R. Erard, "A Critical Evaluation of the Norelco High Angle X-Ray Spectrometer for Elastic Strain Measurement", Review of Scientific Instruments, Vol. 23, No. 12, Dec., 1952, pp. 687-692.

7. Koistinen, D. P. and R. E. Marburger, "X-Ray Measurement of Residual Stresses in Hardened Steels", Proceedings of the Symposium on Internal Stresses and Fatigue in Metals, 1958, pp. 98-109.

8. Koistinen, D. P. and R. E. Marburger, "A Simplified Procedure for Calculating Peak Position in X-Ray Residual Stress Measurements on Hardened Steels", Transactions of American Society for Metals, Vol. 51, 1959, pp. 537-555.

## Descriptive Captions for Illustrations

Figure 1

Geometry of the oblique exposure of the two-exposure method illustrated schematically.

Figure 2

Typical plot of the measured stress and the actual stress (corrected for residual stress) as a function of the shift in $2\theta$.

Figure 3

Master plot for the maraging steels normalized for variations in the stress factors and residual stresses.

Figure 4

Master plot for the AISI 4340 steels normalized for variations in the stress factors and residual stresses.

Figure 5

Master plot for the ausformed steels normalized for variations in the stress factors and residual stresses.

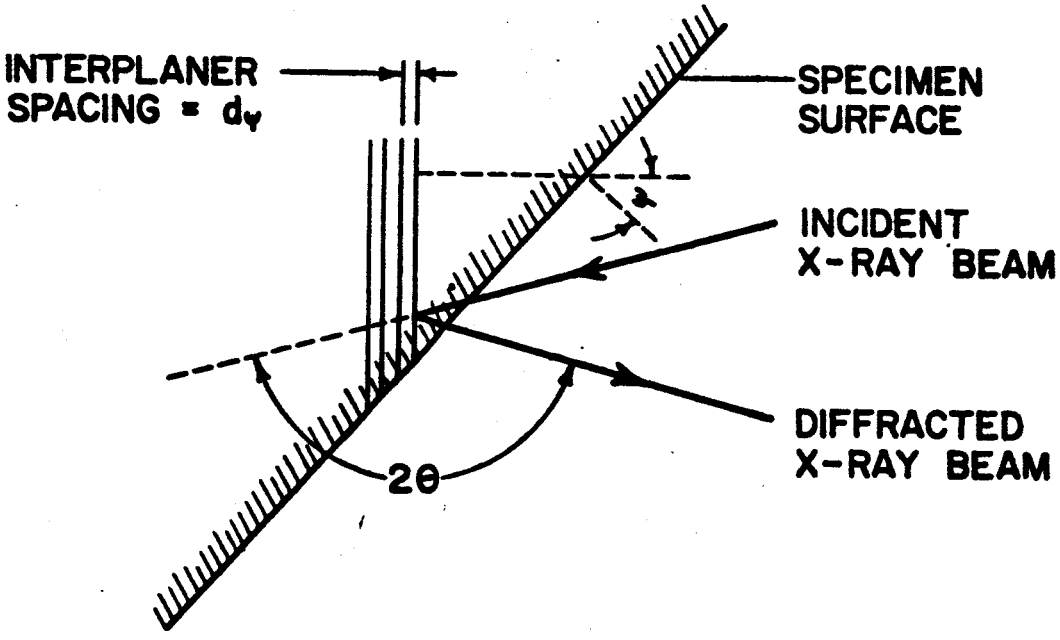
INTERPLANER
SPACING = $d_y$
SPECIMEN
SURFACE
$\alpha$
INCIDENT
X-RAY BEAM
DIFFRACTED
X-RAY BEAM
$2\theta$

FIGURE 1

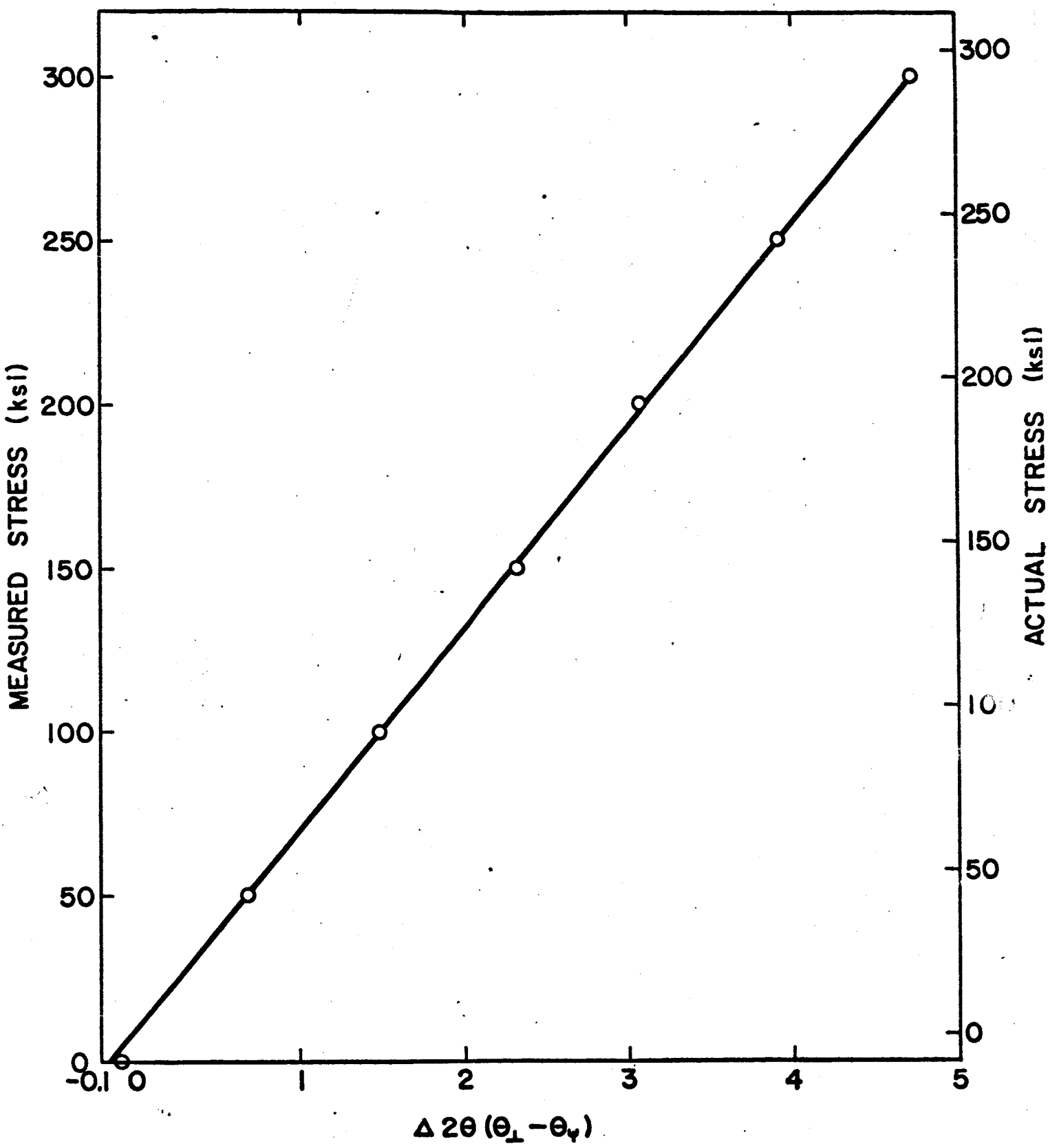
MEASURED STRESS (ksi)
ACTUAL STRESS (ksi)
300
250
200
150
100
50
0
300
250
200
150
10
50
0
-0.1
0
1
2
3
4
5
Δ 2θ (θ⊥ − θψ)

FIGURE 2

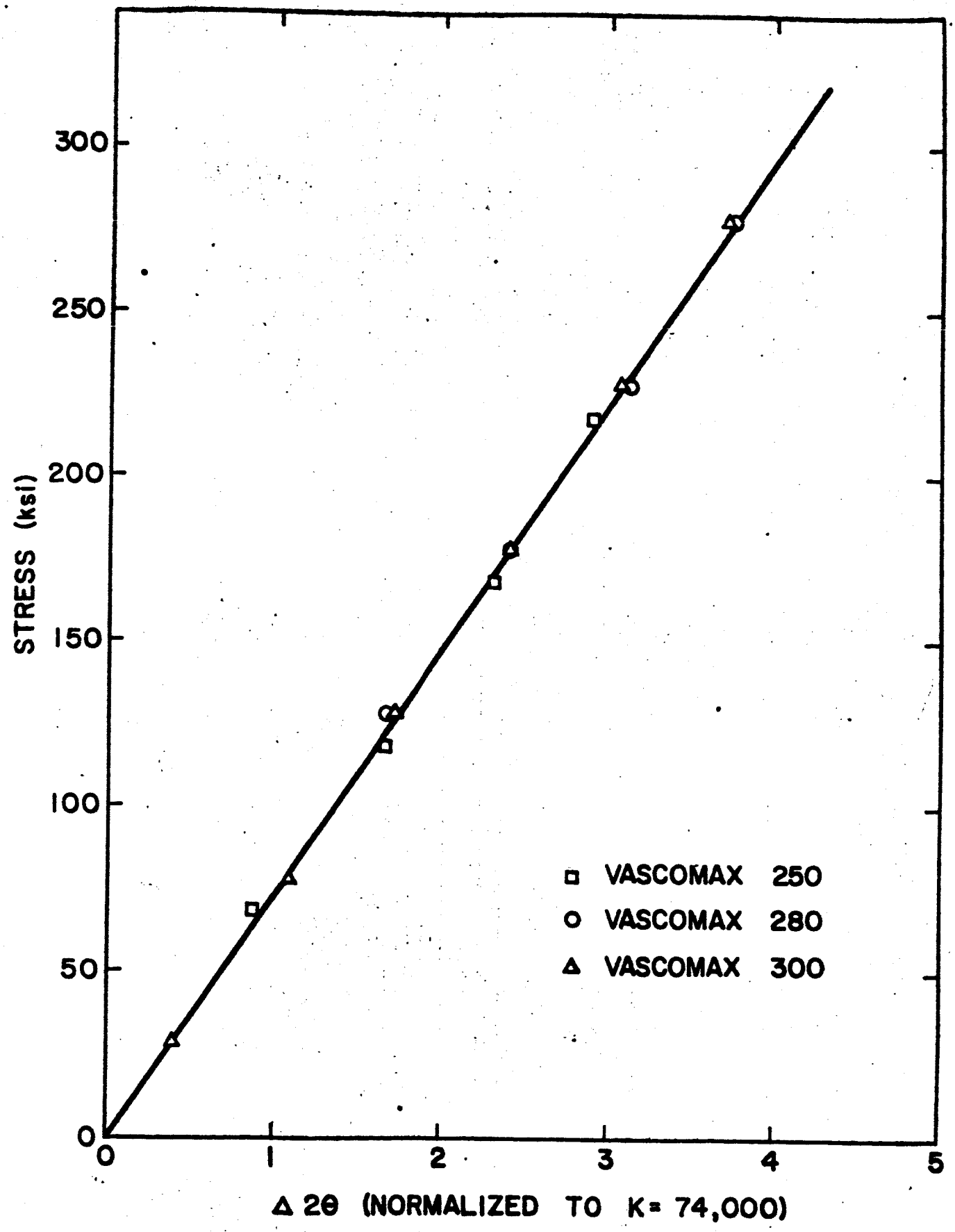
300
250
200
150
100
50
0
STRESS (ksi)
0
1
2
3
4
5
Δ 2θ (NORMALIZED TO K= 74,000)
VASCOMAX 250
VASCOMAX 280
VASCOMAX 300

FIGURE 3

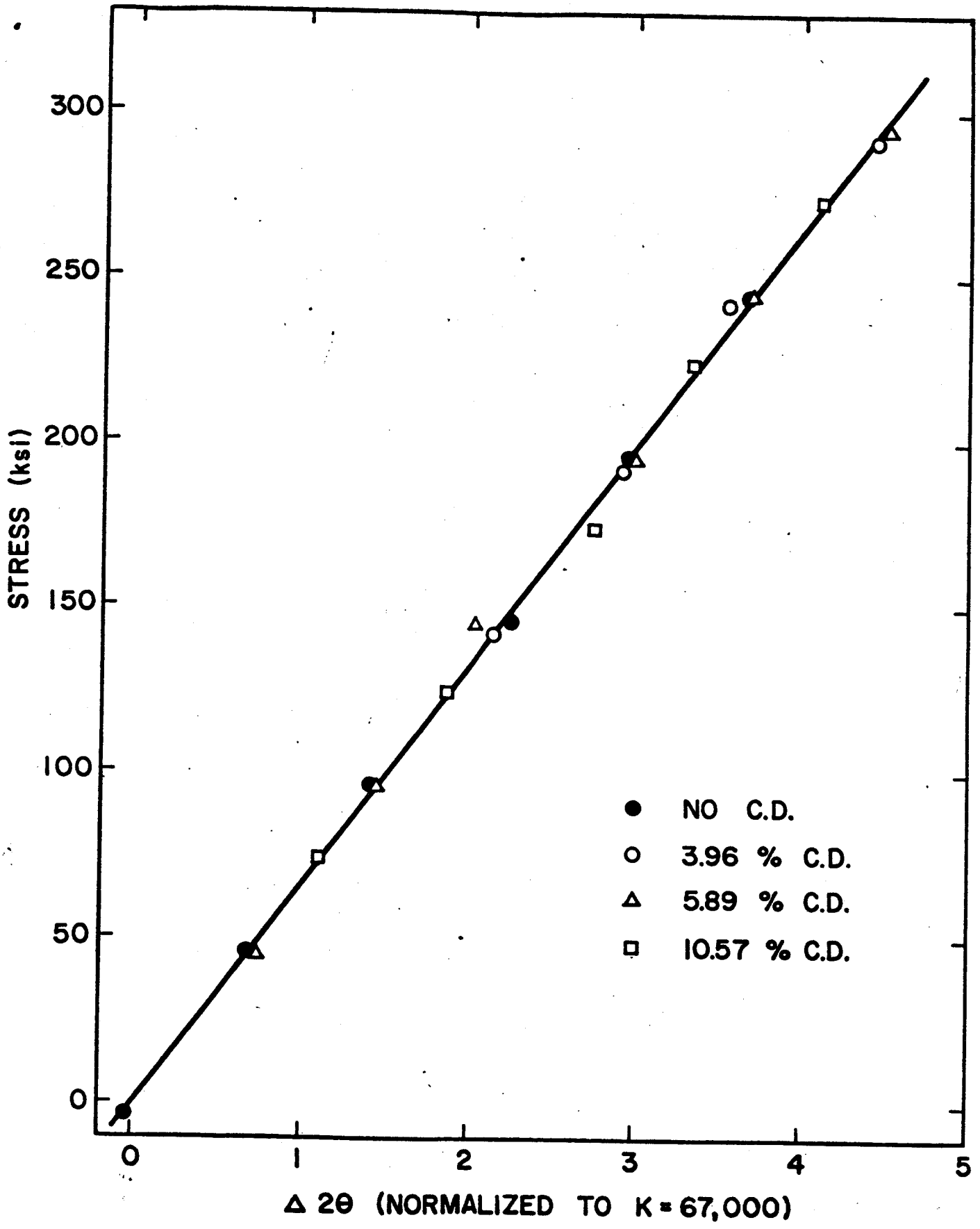
300
250
200
150
100
50
0
STRESS (ksi)
0
1
2
3
4
5
Δ 2θ (NORMALIZED TO K = 67,000)
NO C.D.
3.96 % C.D.
5.89 % C.D.
10.57 % C.D.

FIGURE 4

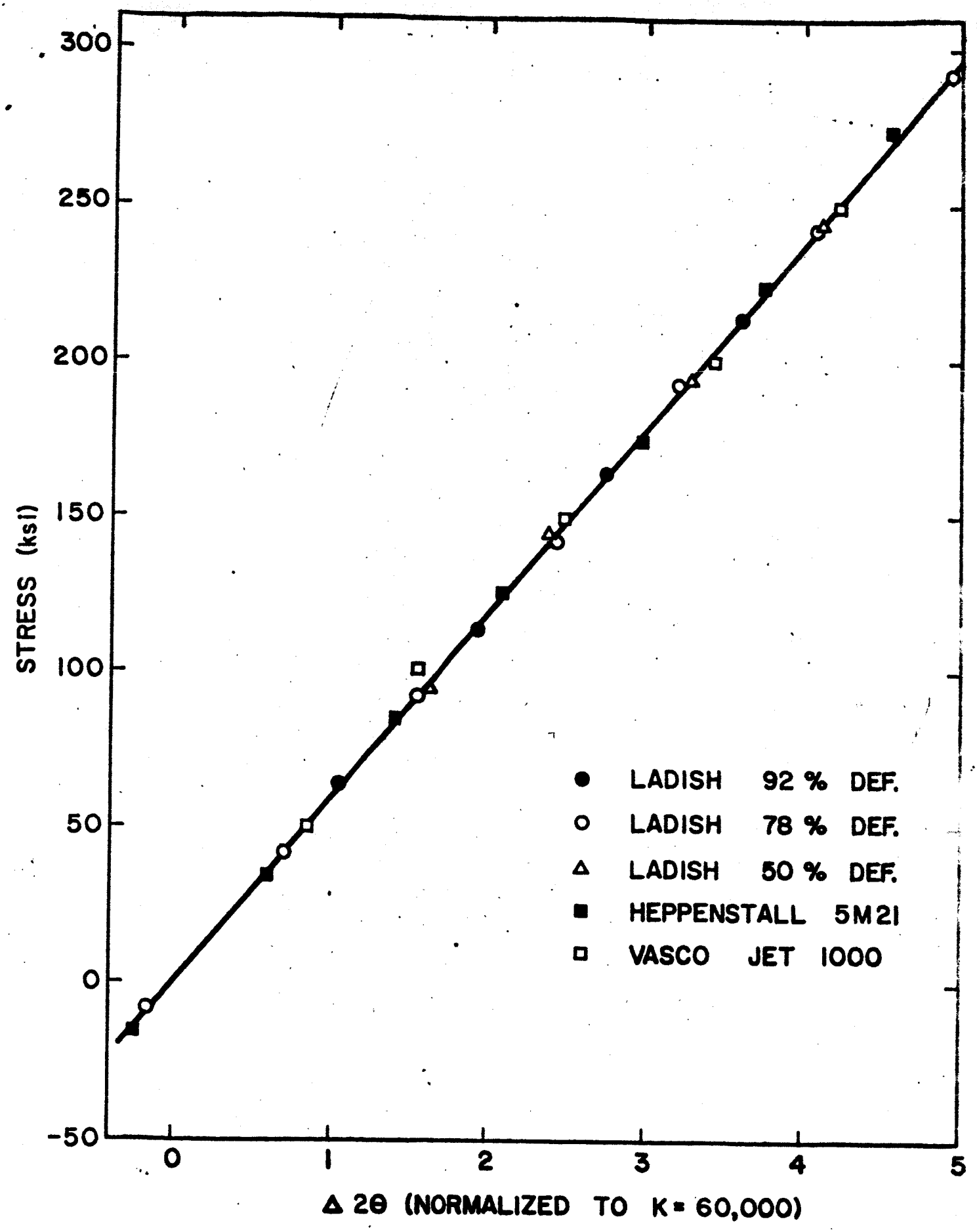
300
250
200
150
100
50
0
-50
STRESS (ksi)
0
1
2
3
4
5
Δ 2θ (NORMALIZED TO K = 60,000)
LADISH 92 % DEF.
LADISH 78 % DEF.
LADISH 50 % DEF.
HEPPENSTALL 5M21
VASCO JET 1000

FIGURE 5

TABLE I

Chemical Analyses, Weight Per Cent, of Utilized Steels

| Material | C | Ni | Co | Mo | Al | Ti | Cr | Si | V | Mn |
|---|---|---|---|---|---|---|---|---|---|---|
| VascoMax 250 | 0.03 max. | 18.5 | 8.5 | 4.8 | 0.1 | 0.4 | - | - | - | - |
| VascoMax 280 | 0.03 max. | 15.0 | 9.0 | 5.0 | 0.7 | 0.7 | - | - | - | - |
| VascoMax 300 | 0.03 max. | 18.0 | 9.0 | 4.8 | 0.1 | 0.6 | - | - | - | - |
| Ladish D-6AC | 0.50 | 0.5 | - | 1.0 | - | - | 1.0 | - | - | - |
| Vasco Jet 1000 | 0.40 | - | - | 1.3 | - | - | 5.0 | 1.0 | 0.5 | - |
| Heppenstall 5M21 | 0.20 | 3.1 | - | 3.3 | - | - | 0.15 | 0.3 | 0.1 | - |
| AISI 4340 | 0.40 | 1.85 | - | 0.25 | - | - | 0.80 | 0.28 | - | 0.70 |

## TABLE II

## Corrected Stress Factors for Utilized Steels

| Material | Per Cent Deformation | k psi/deg |
|---|---|---|
| VascoMax 250 | - | 74,000 |
| VascoMax 280 | - | 75,000 |
| VascoMax 300 | - | 77,000 |
| Ladish D-6AC | 50[a] | 65,000 |
| Ladish D-6AC | 78[a] | 66,000 |
| Ladish D-6AC | 92[a] | 60,000 |
| Vasco Jet 1000 | 90[a] | 78,000 |
| Heppenstall 5M21 | 83[a] | 72,000 |
| 4340 | 0[b] | 67,000 |
| 4340 | 3.96[b] | 72,000 |
| 4340 | 5.89[b] | 70,000 |
| 4340 | 10.57[b] | 72,000 |

a. Rolled in the austenite range, ausformed

b. Cold drawn in the fully hard martensitic condition.