https://ntrs.nasa.gov/search.jsp?R=19660027080 2018-05-25T16:36:03+00:00Z

NATIONAL AERONAUTICS AND SPACE ADMINISTRATION

Technical Report No. 32-933

Mariner Mars 1964 Mechanical Configuration

R. J. Spehalski

FACILITY FORM 602

N66 36370
(ACCESSION NUMBER)

28
(PAGES)

CR-77981
(NASA CR OR TMX OR AD NUMBER)

(THRU)

1
(CODE)

31
(CATEGORY)

GPO PRICE $ _____

CFSTI PRICE(S) $ _____

Hard copy (HC) 2.00

Microfiche (MF) .50

ff 653 July 65

JET PROPULSION LABORATORY
CALIFORNIA INSTITUTE OF TECHNOLOGY
PASADENA, CALIFORNIA

September 1, 1966

NATIONAL AERONAUTICS AND SPACE ADMINISTRATION

Technical Report No. 32-933

Mariner Mars 1964 Mechanical Configuration

R. J. Spehalski

J. N. Wilson, Manager
Mariner Development

JET PROPULSION LABORATORY
CALIFORNIA INSTITUTE OF TECHNOLOGY
PASADENA, CALIFORNIA
September 1, 1966

Copyright © 1966
Jet Propulsion Laboratory
California Institute of Technology

Prepared Under Contract No. NAS 7-100
National Aeronautics & Space Administration

CONTENTS

I. Introduction 1

II. Design Requirements 5
- A. Launch Vehicle Requirements 5
- B. Spacecraft System Requirements 5
- C. System Operational Requirements 6
- D. Subsystems Requirements 7
  - 1. Attitude Control 7
  - 2. Communications 7
  - 3. Propulsion 7
  - 4. Power 7
  - 5. Science 7
  - 6. Temperature Control 8
  - 7. Structure 8

III. Configuration Evaluation Criteria 8

IV. Evolution of Spacecraft Configuration 9
- A. Design Study Phase 9
  - 1. Solar Array Configuration 10
  - 2. Electronic Component/Structure Integration 10
- B. *Mariner M* Configurations 10
- C. Choice of Octagonal Structure 17

V. Flight Configuration Description 18
- A. Structure 18
  - 1. Basic Octagon 18
  - 2. Secondary Structure 18
  - 3. Superstructure 18
- B. Electronic Packaging and Cabling 18
- C. Propulsion System 18
- D. Attitude Control Gas System 21
- E. Solar Pressure Vane System 21
- F. Solar Panels 21
- G. Attitude Reference Sensors 22
- H. Antennas 22
- I. Science 23
- J. Temperature Control 23
- K. Adapter Interface 23

VI. Relative Importance of Design Requirements 24

VII. Evaluation of Spacecraft Configuration 25
- A. Short-Range Growth Potential 25
- B. Ground Operations 26

CONTENTS (Cont'd)

VIII. Conclusions 26
A. Problems from Interrelated and Conflicting Requirements 26
B. Gains from Slight Subsystem Modifications 27
C. Need for Flexibility in Integration of Temperature Control System 27
D. Need for Early Consideration of Assembly and Handling Processes 27
E. Greatest Structural Efficiency Effected in Initial Design Phase 27
F. Dependence of Subsystem Developments on Mechanical Configuration 27
G. Necessity for Overall Program Awareness 27

Bibliography 27

FIGURES

1. ***Mariner IV* spacecraft** 2
2. ***Mariner IV* spacecraft mechanical configuration** 3
3. **Typical electronic subassembly** 6
4. **First *Mariner M* configuration** 11
5. **Early study configuration, *Mariner M*** 13
6. ***Mariner M* cruciform proposal** 14
7. ***Mariner M* square proposal** 15
8. ***Mariner M* octagon proposal** 16
9. ***Mariner C* electronics packaging assembly** 19

ABSTRACT

This report summarizes the design considerations for the mechanical configuration of the *Mariner Mars 1964* spacecraft. Sources of various configuration design requirements are discussed, including the launch vehicle and the spacecraft system and its subsystems. The evolution of the design, representative problems encountered during the configuration evolution, and criteria used in evaluation of succeeding iterations—satisfaction of subsystem requirements, structural efficiency, operational simplicity, and growth potential—are presented. The resultant design is described and evaluated relative to the proposed criteria. Finally, conclusions and recommendations are given that may be of value in mechanical configuration design for future projects.

I. INTRODUCTION

The objectives of the *Mariner Mars 1964* flyby mission of the planet Mars were to obtain scientific information on interplanetary space and near Mars, television pictures of the Martian surface, and occultation data from spacecraft radio signals as affected by the atmosphere of the planet. Although the spacecraft was a new design, it was based on *Ranger/Mariner* technology and utilized new or untried developments only where absolutely necessary or where equipment lifetime was not a primary concern. Two spacecraft of this series were launched—*Mariner III*, launched on November 5, 1964, was only partially successful because the shroud could not be jettisoned and the spacecraft died approximately nine hours after launch when the battery ran out of power. A new protective shroud was designed and fabricated, and *Mariner IV* (Fig. 1) was launched on November 28, 1964. All systems functioned as designed and the spacecraft completed all mission objectives and was still functioning nominally when the mission was terminated on October 1, 1965. At that time the spacecraft was commanded to transmit over the low-gain antenna, permitting the spacecraft to be tracked from Earth until mid-1967. At that time *Mariner IV* will again be within telemetry reception range.

The outcome of any space program is the result of a complex interaction of many variables, of which the mechanical configuration is very important. The various subsystems comprising a spacecraft system impose requirements on the configuration for structural support, mechanical alignment, and environmental control. Subsystem detail requirements vary and sometimes conflict, but the configuration designer must attempt to satisfy all the subsystem requirements. In so doing, the following system objectives must be met:

1. Structural weight must be minimized.
2. Subsystems must be able to perform their functions during flight and interact properly with other subsystems.
3. Spacecraft ground tests and operations must be accomplished in a safe and timely fashion.
4. Subsystem compromises must be minimized.

Briefly then, the purpose of the mechanical configuration is to functionally integrate, with a minimum of compromise and weight, the various subsystems comprising a

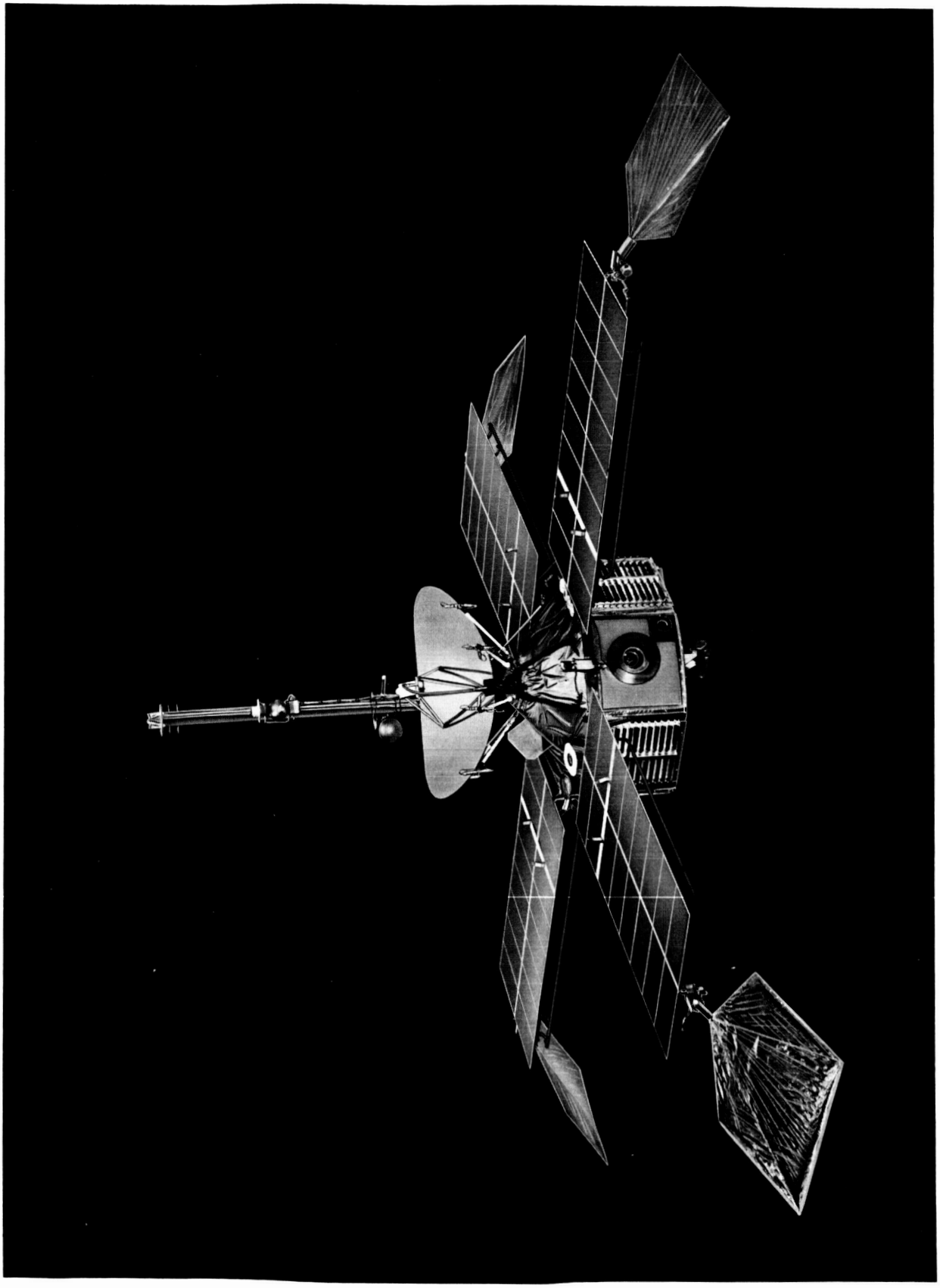

Fig. 1. *Mariner IV* spacecraft

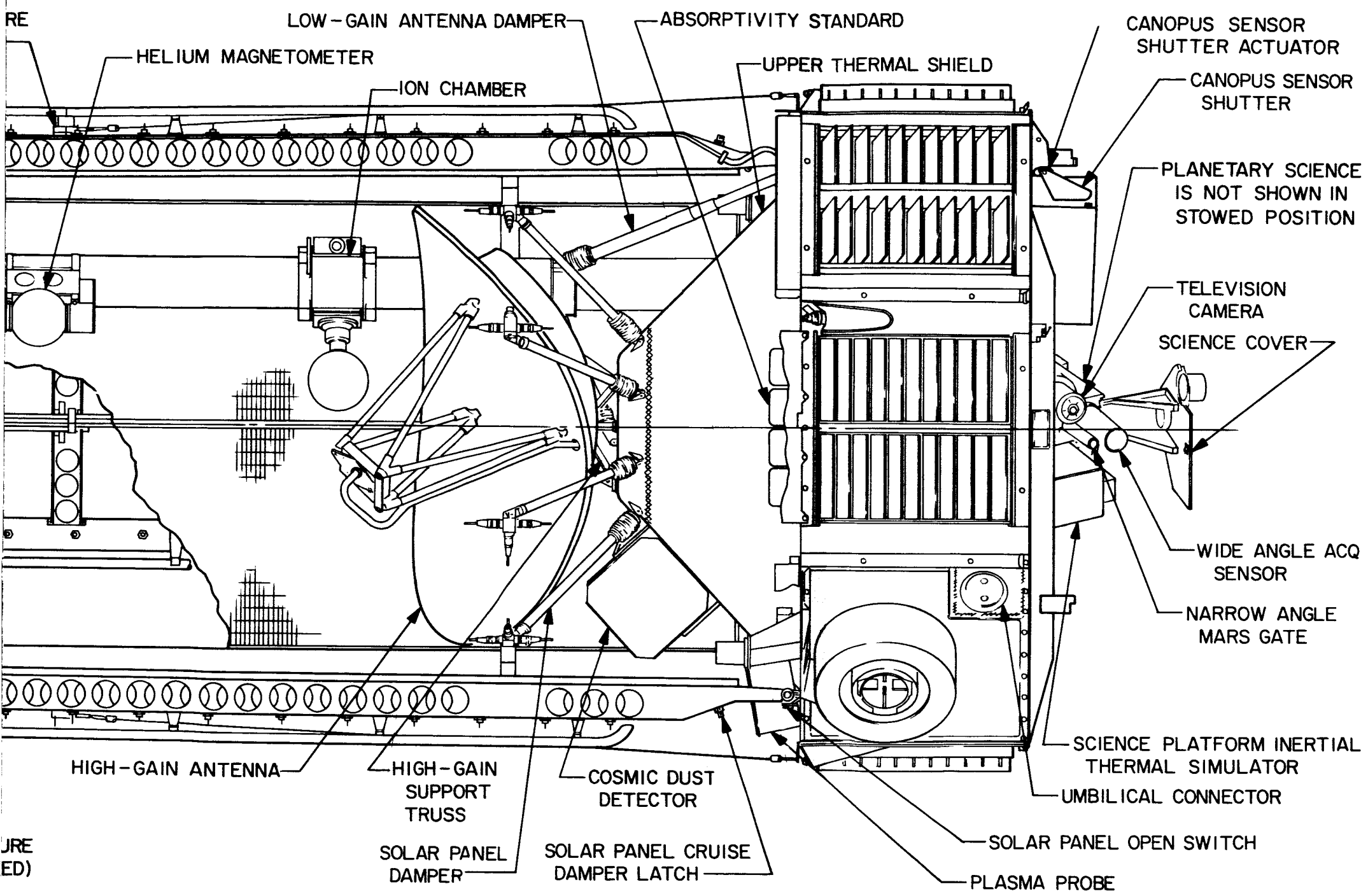

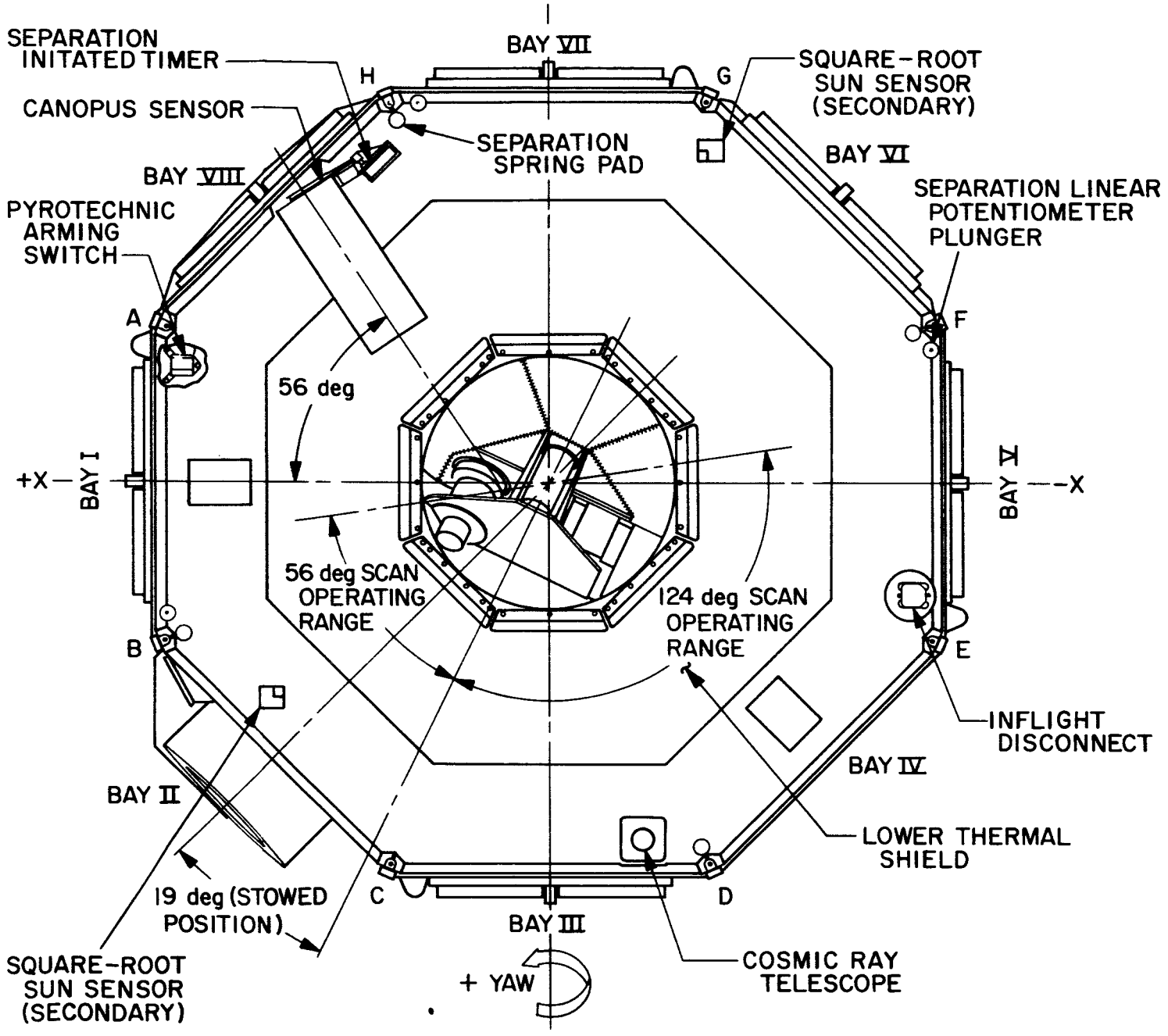

Fig. 2. ***Mariner IV*** **spacecraft mechanical configuration**

3-3

3-4

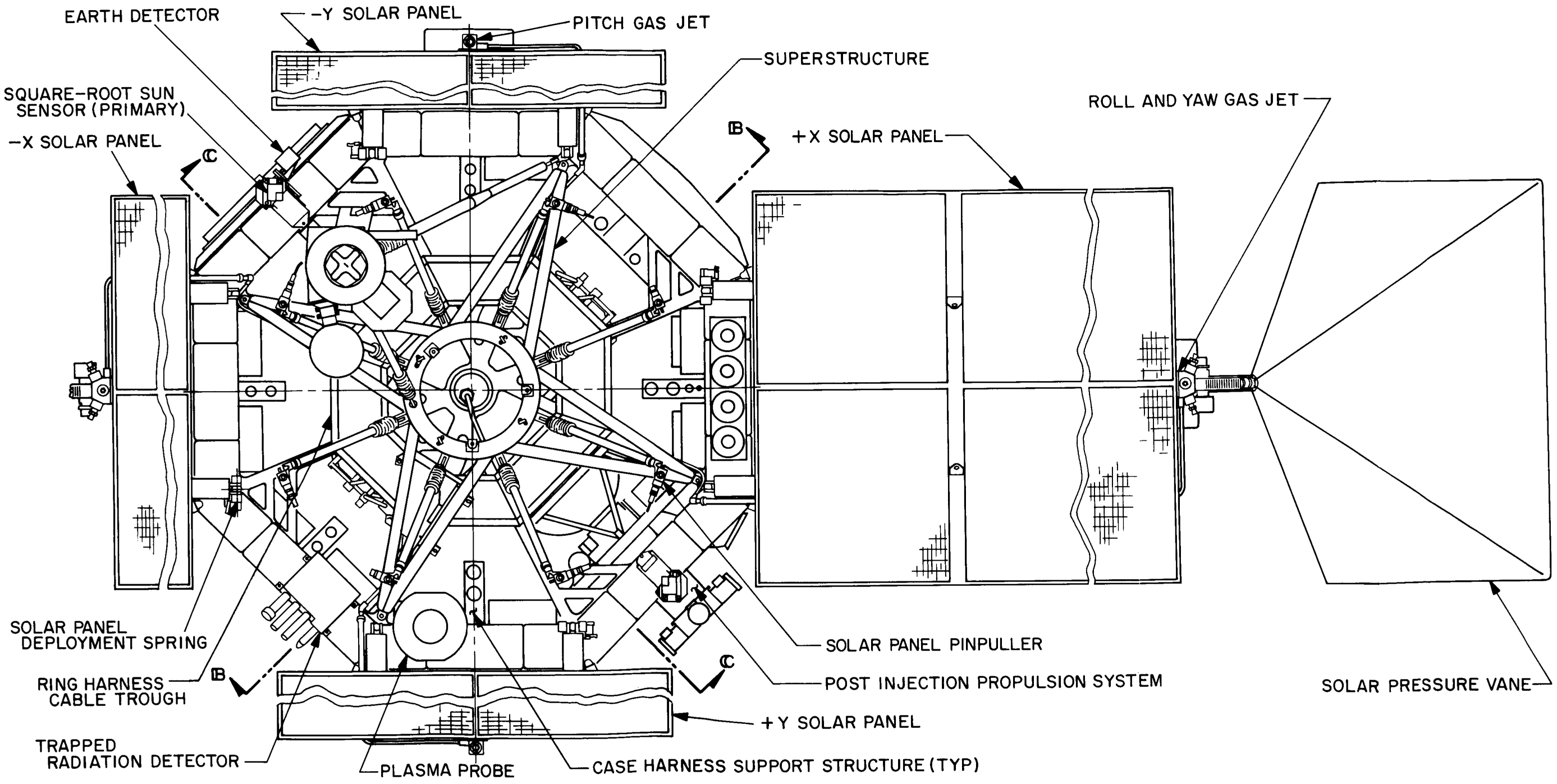

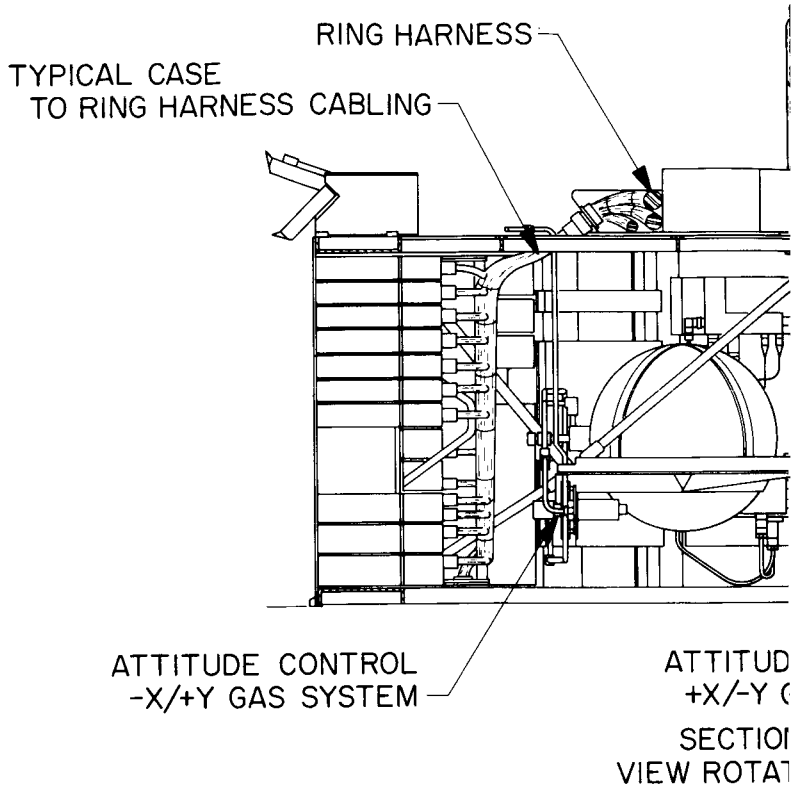

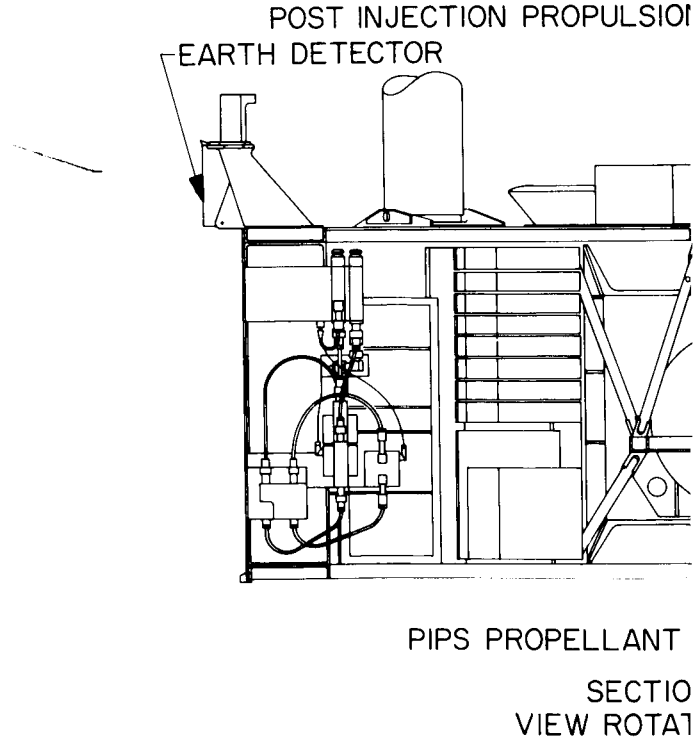

Fig. 2. (Cont'd)

-1

4-2

4-3

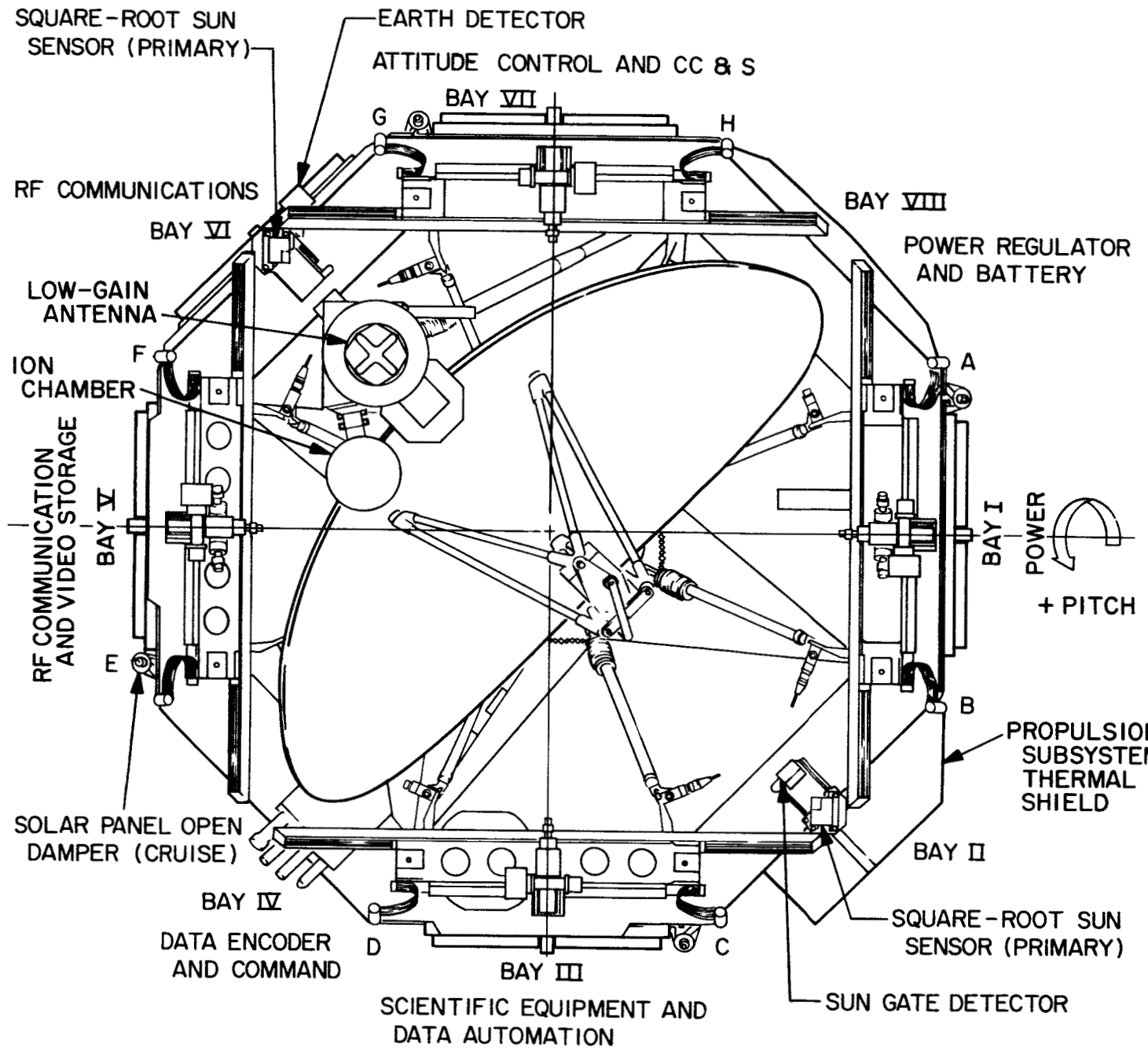
SQUARE-ROOT SUN SENSOR (PRIMARY)
EARTH DETECTOR
ATTITUDE CONTROL AND CC & S
BAY VII
G
H
RF COMMUNICATIONS
BAY VI
BAY VIII
POWER REGULATOR AND BATTERY
LOW-GAIN ANTENNA
F
A
ION CHAMBER
RF COMMUNICATION AND VIDEO STORAGE
BAY V
BAY I
POWER
+ PITCH
E
B
PROPULSION SUBSYSTEM THERMAL SHIELD
SOLAR PANEL OPEN DAMPER (CRUISE)
BAY II
BAY IV
SQUARE-ROOT SUN SENSOR (PRIMARY)
DATA ENCODER AND COMMAND
D
C
BAY III
SUN GATE DETECTOR
SCIENTIFIC EQUIPMENT AND DATA AUTOMATION
A
A

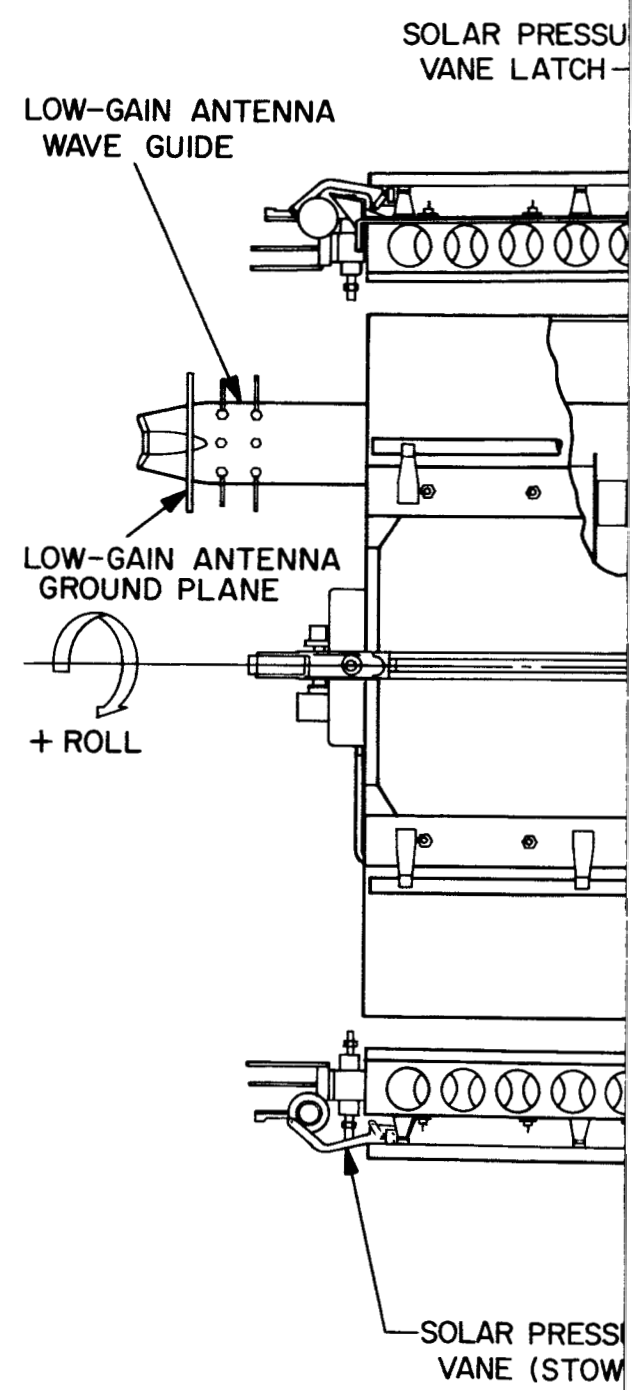
SOLAR PRESSU
VANE LATCH
LOW-GAIN ANTENNA WAVE GUIDE
LOW-GAIN ANTENNA GROUND PLANE
+ ROLL
SOLAR PRESS
VANE (STOW

3-1

3·2

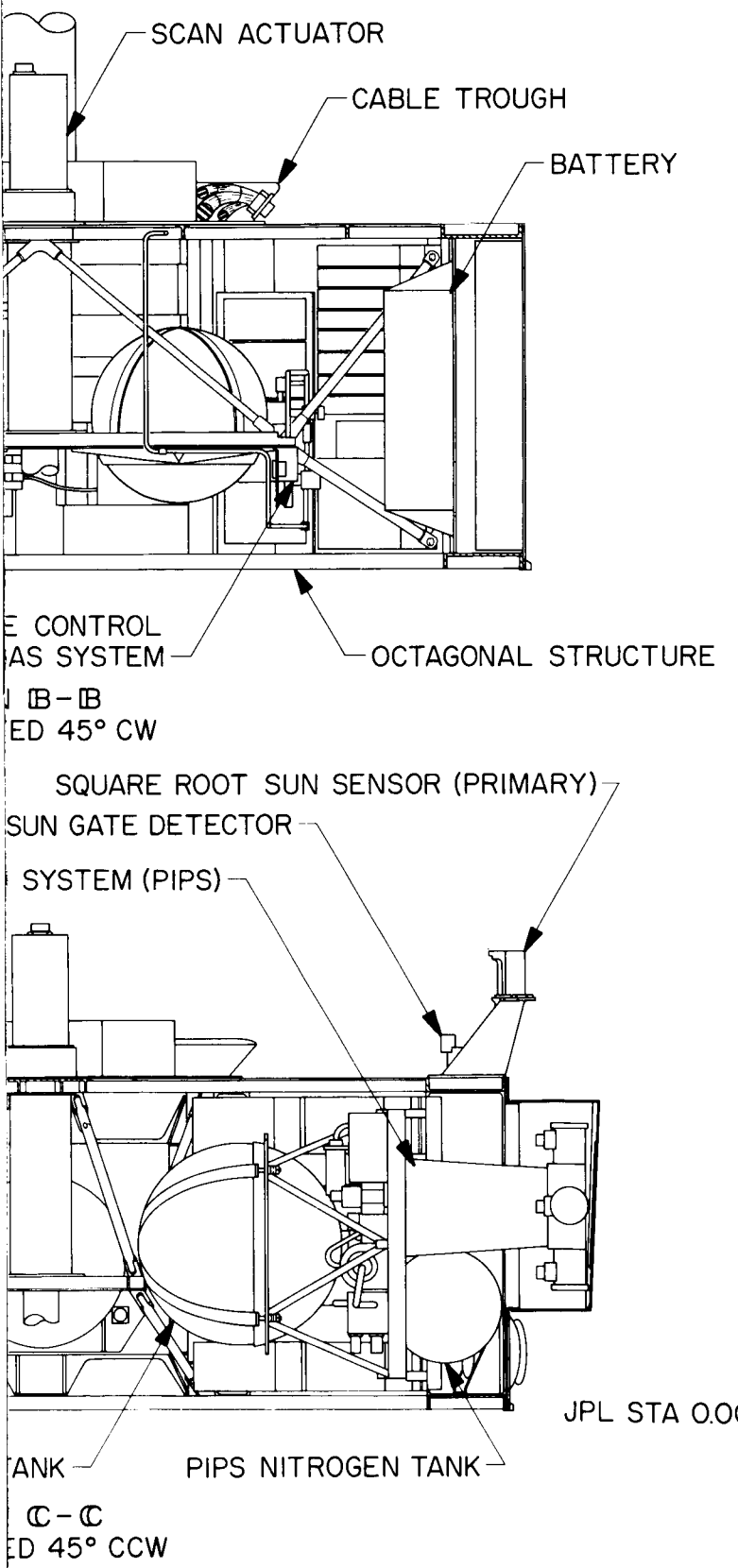
SCAN ACTUATOR
CABLE TROUGH
BATTERY
E CONTROL
AS SYSTEM
OCTAGONAL STRUCTURE
B-B
ED 45° CW
SQUARE ROOT SUN SENSOR (PRIMARY)
SUN GATE DETECTOR
SYSTEM (PIPS)
JPL STA 0.00
ANK
PIPS NITROGEN TANK
C-C
ED 45° CCW

4-4

working spacecraft. This report discusses how the above objectives were accomplished in the *Mariner Mars* program. Evolution of the design and its final configuration (Fig. 2) are described; the relative importance of conflicting design requirements are evaluated; deficiencies in the final configuration are analyzed; and finally, general conclusions regarding configuration design are drawn that may be of value to designs of other spacecraft.

II. DESIGN REQUIREMENTS

Design requirements and/or constraints are imposed on the spacecraft mechanical configuration by the launch vehicle, the spacecraft system, the spacecraft subsystems, and by the tests and operations that must be performed to qualify the spacecraft for flight.

A. Launch Vehicle Requirements

The launch vehicle used for the *Mariner Mars 1964* mission was the *Atlas-Agena D*. The Mars payload capability of this vehicle was 570 lb with a launch period of 29 days. This rather limited payload capability for the mission under consideration emphasized, early in the program, the need for minimizing total spacecraft weight. Early studies, therefore, attempted to package the spacecraft within the diameter allowed by a 60-in.-diam shroud (the protective aerodynamic fairing) and, thereby, minimize shroud weight. This diameter is the same as that of the basic *Agena-D* vehicle. However, the selection of a shroud under development with a 65-in. OD permitted relaxation of the diameter constraint. Since there was no attempt to package the spacecraft within an existing shroud, the only constraint on shroud height—and, therefore, spacecraft height—was weight. Hence, the spacecraft was kept as short as possible to minimize shroud weight and maximize payload weight.

The final shroud constraint on the spacecraft configuration was that the spacecraft had to allow for shroud ejection by both *clamshell* and over-the-nose techniques. Of these two techniques, the latter is generally more restrictive to the spacecraft because the allowable spacecraft envelope is reduced by the dynamic clearance required during jettisoning of the shroud.

The final launch-vehicle constraint stems from the requirement for physical attachment of the spacecraft to the *Agena* forward equipment rack, by means of the adapter section, in as direct a fashion as possible to minimize payload support weight.

B. Spacecraft System Requirements

The system requirements imposed on the *Mariner Mars 1964* mechanical configuration include flight spacecraft characteristics and ground test or operational requirements. Flight requirements included such basic capabilities as trajectory correction, by which the spacecraft was enabled to accomplish the mission objectives. Ground test requirements included assembly, systems test, environmental test, shipping and launch-vehicle mating, all of which operations needed to be performed in a safe and expeditious manner; therefore, the configuration was required to accommodate them.

Flight characteristics imposed four major system requirements:

1. The spacecraft would be Sun-stabilized.
2. An active, three-axis attitude control system would be used.
3. Trajectory correction capability would be incorporated in the design.
4. The *Ranger/Mariner II* modular profile would be used. (A typical 6- × 6-in. electronic module is shown in Fig. 3.)

The last item, though not a flight characteristic, was incorporated to maximize operating lifetime by taking advantage of the design and operating experience gained by this proven design technique. Of all the configuration requirements and constraints, the use of the *Ranger/Mariner II* subassembly was the most restrictive to the mechanical configuration. The need to minimize nonelectronic weight precipitated the desire to structurally integrate the electronic subassemblies with the basic structure. Definition

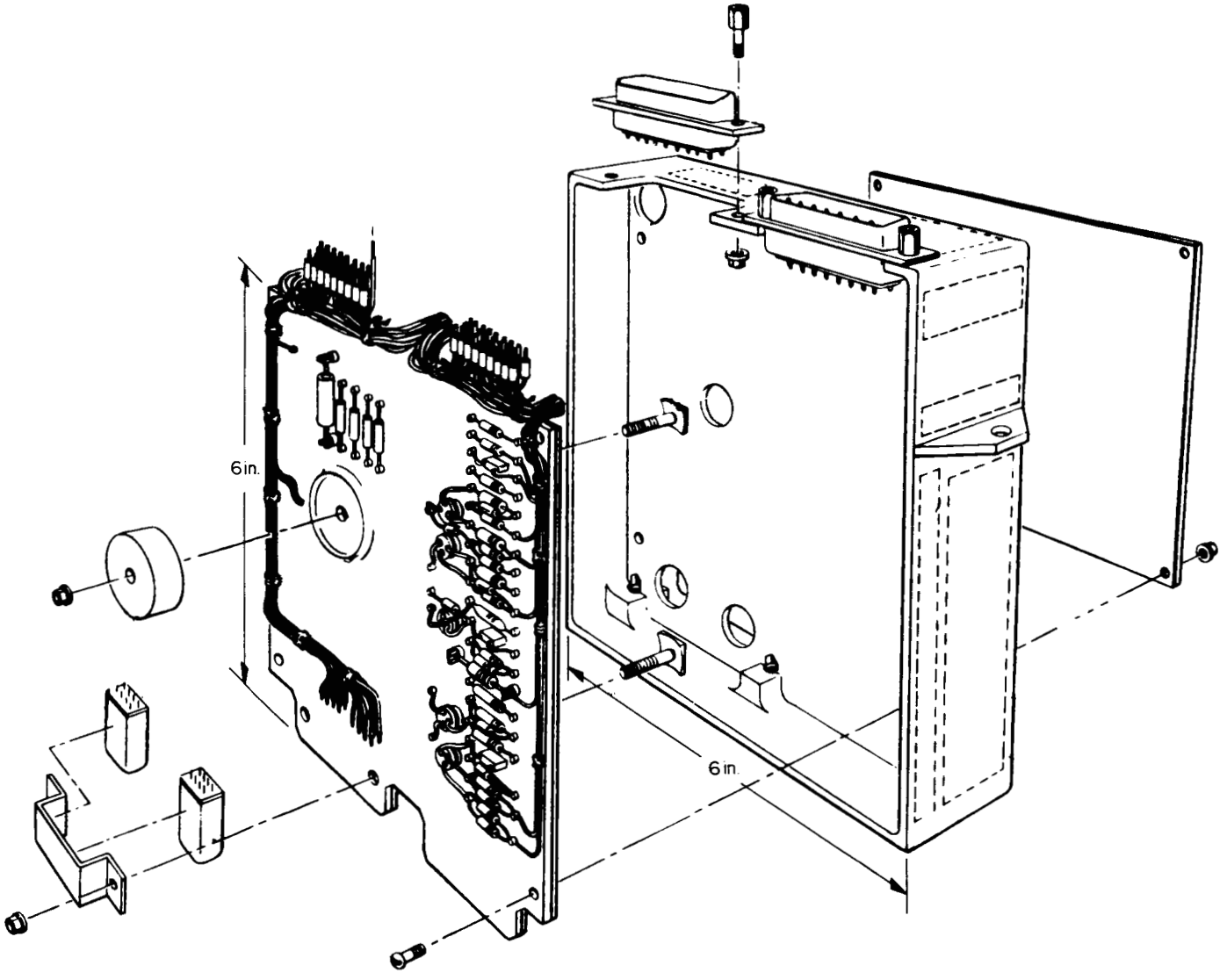

Fig. 3. Typical electronic subassembly

of modular profile, attach points, and connector locations left little flexibility in shaping the basic structure for effective use of the electronic assembly as spacecraft structure without extensively compromising other subsystem requirements. Therefore, although early configuration studies yielded a wide variety of designs, the majority were rejected because of overcompromise of some particular subsystem's requirements.

C. *System Operational Requirements*

The spacecraft-system operational requirements are based on the need to perform all the spacecraft assembly operations, qualification tests, shipping operations, and preparation for launch as safely and expeditiously as possible. For any proposed configuration, the designer must be constantly aware of the details that make the spacecraft safe and easy to work on. These include such items as means and capability for electronic assembly and subassembly installation; for connector access; for gas system and propulsion system installation, pyrotechnic installation, and test equipment installation. Additional capabilities must provide for center-of-gravity determination and propulsion system thrust vector alignment, measurement and control of overall spacecraft mechanical alignments, handling of the spacecraft during assembly and test operations and transporting the spacecraft between test facilities and the Air Force Eastern Test Range (AFETR). The

mechanical configuration significantly influences the degree of difficulty associated with the performance of all such operations.

D. Subsystem Requirements

The remainder of requirements imposed on the mechanical configuration come from the various spacecraft subsystems.

1. Attitude Control

a. Celestial references system requirements.

Sun	Permit complete spherical coverage such that the Sun can be viewed by the Sun sensors while the spacecraft is in any arbitrary attitude.
	Minimize illumination by reflected light.
Canopus (star)	Locate Canopus sensor such that the star can be viewed throughout the flight.
	Eliminate stray light reflections into sensor.
Earth detector	Locate such that Earth is viewed in early portion of flight.
	Minimize illumination by stray light.

b. Control system requirements.

Cold gas system	Provide capability for two complete systems that are insertable as separate units.
	Provide for unobstructed exhaust from gas nozzles.
Solar pressure system	Provide movable vanes to balance solar pressure forces. Vane area required is a function of vane location.

2. Communications

High-gain antenna	Provide for approximately 4-ft-diam antenna to view Earth over the majority of the cruise portion of flight.
	Minimize protrusions into the prescribed antenna field of view.
Low-gain antenna	Provide for antenna coverage of Earth when spacecraft is not Sun-stabilized.
Antenna cabling	Minimize length of antenna coax.

3. Propulsion

	Provide for propulsion system within temperature-controlled volume of spacecraft.
	Provide for pointing of propulsion system thrust vector through the spacecraft center of mass within prescribed tolerance.
	Minimize motor exhaust impingement on spacecraft surfaces.
	Provide for installation of loaded propulsion system late in spacecraft assembly sequence.

4. Power

	Provide 70 ft^2 of usable area normal to the rays of the Sun for mounting of solar cells.

5. Science

a. Planetary science experiments requirements.

Television	Provide for mounting a television camera pointing approximately 120 deg from the spacecraft Sun line and with a scan amplitude greater than ± 45 deg about the nominal aiming point.
Infrared spectrometer	Provide for locating an IR spectrometer looking at the same area as the television.
Ultraviolet spectrometer	This instrument replaced the IR instrument but had essentially the same pointing requirement.
Science platform inertial and thermal simulator	This simulator replaced the UV instrument without changing the configuration.

b. Interplanetary science experiments requirements.

Ion chamber	Provide as great a field of view as possible (spherically sensitive).
Cosmic dust	Provide detector area viewing approximately in the ecliptic plane, both in direct spacecraft motion and in retrograde motion.
Cosmic ray telescope	Provide a 60-deg conical unobstructed field of view pointing away from the Sun line and within the temperature controlled volume of the spacecraft.
Trapped radiation detector	Provide unobstructed field of view of 60-deg cones 70 deg from the Sun line and 135 deg from the Sun line.
Solar plasma detector	Provide an unobstructed 30-deg conical view of the Sun.
Magnetometer	Locate as far as possible from the sources of spacecraft magnetic fields with instrument axes at known locations relative to spacecraft axes.

6. Temperature Control	Provide a clean (thermally) spacecraft exterior.
	Minimize heat leaks.
	Provide surfaces for actively controlling radiation rate.
	Enclose low power dissipation items that require relatively close temperature control.
	Provide means for attaching insulation blankets.
	Provide adequate area for radiative heat rejection to space from the electronic assemblies.
	Provide area for mounting absorptivity measuring instrument with near hemispherical field of view pointed at Sun.
7. Structure	Provide structural support for spacecraft subsystems.
	Maintain mechanical alignment of subsystems.
	Minimize structural weight.

III. CONFIGURATION EVALUATION CRITERIA

To satisfy the foregoing list of launch vehicle, spacecraft system, and subsystem design requirements and constraints, several mechanical configurations were generated. As the original general requirements became better defined, additional configurations were generated or existing ones, modified to accommodate the recognized needs. Each configuration was evaluated by a relatively fixed set of four criteria, which are, in decreasing order of priority:

1. Satisfaction of subsystem requirements
2. Structural efficiency
3. Operational simplicity
4. Growth potential

The first evaluation criterion is fundamental. To qualify as a configuration, a concept must, as a a minimum, satisfy all the basic requirements. However, just as any valid configuration will satisfy the basic requirements, it will also compromise some of the subsystems and, thereby, either make an individual job more difficult or require a new development. The tradeoffs involved in these judgments are qualitative, at best, and in most cases, debatable; however, the judgments must be made.

The second evaluation criterion, structural efficiency, is more amenable to the generation of quantitative differences between competing configurations. Relative weights can be calculated and utilized as an index of structural

efficiency; weight comparisons are a good measure of (1) the degree of integration of packaging and structure and (2) the selection of mounting, attach and latch points for the major components. It is in the basic configuration that the major structural advantages are made. Here, the primary load paths are defined. If the path is short and simple, an efficient structure can result; if the path is long or tortuous, weight penalties are unavoidable. Finally, if the structure makes use of familiar approaches that lend themselves readily to analysis, weight penalties to cover uncertainties are minimized.

The third evaluation criterion, operational simplicity, is concerned with both flight and ground operations. Simplicity in flight is generally synonymous with reliability. If a function is to be performed reliably, the number of discrete operations associated with the function should be minimized. Spacecraft flight operations are performed automatically, i.e., without the benefit of human judgment; therefore, failure of any to be performed within a prescribed tolerance may abort, or seriously degrade, the mission. This criterion then concerns not only limiting the number of events associated with a particular function but, also, minimizing the severity of discrete failures. For example, failure to deploy a high-gain antenna may shorten the useful life of a spacecraft by causing communications problems and thrust vector misalignment (resulting from the out-of-tolerance center of mass location). Both of these problems are circumvented if a configuration does not rely on antenna deployment.

Ground operational simplicity, on the other hand, is concerned with minimizing the time required to conduct preflight operations and lessening the likelihood of spacecraft damage during these operations. The *Mariner* program was characterized by tight schedules. Hence, the need arose for expeditious ground operations during both preflight testing and AFETR operations. The time required for replacement of components after the spacecraft has been installed on the launch vehicle (turnaround-time) subtracts directly from the available launch period; the advantage of simplifying, and thereby minimizing mechanical operations time, is obvious. Similarly, ground operational simplicity yields safer mechanical operations and, therefore, a lower probability of spacecraft damage and the attendant need for part replacement or worse.

The final evaluation criterion, growth potential, is concerned with growth allowance within the current program (short-range) and into succeeding programs (long-range). The need for the former arises because requirements change. At the time the mechanical configuration is selected, some detail requirements are not firm. Therefore, such requirements as volume, view angles, interface conditions, and others may change. Hence, the configuration engineer must recognize that requirements change and endeavor to incorporate flexibility within the configuration design.

Increasing growth potential toward future programs is desirable for several reasons, among them (1) economy of resources and design confidence are gained by adapting existing, proven design concepts and (2) development times can be shorter and reliability gains can be achieved. Both of these potential benefits are extremely desirable for tightly scheduled interplanetary space programs. However, this criterion may be overshadowed by current program needs and, therefore, does not always receive the emphasis it deserves.

IV. EVOLUTION OF SPACECRAFT CONFIGURATION

A. Design Study Phase

A spacecraft mechanical configuration is the product of an evolutionary design process. Because of its complex nature, a configuration is subject to numerous changes during development. These changes may range from modifications of mission philosophy, design objectives, or scientific payload to advances in such technologies as structural resonances, thermal balances, or optical sensor sensitivity. During the course of the *Mariner Mars 1964* configuration studies, approximately 20 different mechanical configurations were investigated.

The primary objective during the early study phase of the program was to establish the feasibility of the mission. In a configuration sense, this meant minimizing nonelectronic weight by structurally integrating the electronic packaging and basic spacecraft structure, and by attaching the spacecraft to the *Agena* in as direct a manner as

practical. From these studies, two configuration characteristics emerged that remained throughout the program: (1) a four-panel solar array, and (2) the feasibility of integrating the 6- × 6-in. electronic subchassis with the basic structure.

1. Solar Array Configuration

The *Mariner Mars 1964* spacecraft configuration had to satisfy the requirements of all the subsystems that comprised the working spacecraft. Of these, the most demanding was the necessity for adequate solar panel area. At the start of the study portion of the program, a 45-ft^2 panel area was required. By the end of preliminary design, this requirement had increased to 70 ft^2. The early studies indicated that a solar array configuration with four symmetrical, erectable solar panels would be desirable for several reasons:

1. Symmetry would minimize solar pressure perturbing torques.
2. The required area could not be achieved with fixed panels.
3. The attitude control gas system weight saving available by putting the jets at a large distance from the center of mass attached to existing structure, viz, solar panel tips, was significant.
4. The need to stow a large high-gain antenna on the forward end of the spacecraft necessitated optimizing the cross-sectional area enclosed by the stowed panels.
5. The selection of Canopus as the roll attitude reference constrained the maximum dimension of the high-gain antenna to be approximately parallel to the spacecraft Canopus line; therefore, a panel arrangement that had a sizable dimension in this direction was desired.
6. The requirement that the Canopus sensor view on both sides of the plane of the deployed panels required that the separation between deployed panels be such that the sensor would have an unobstructed view between panels.
7. A four-panel arrangement could be secured for boost by latching at the tip of the panels.

This last design feature is desirable because it eliminates the difficulties associated with supporting the panels through the superstructure, viz, antenna clearance, assembly, Sun sensor fields of view, etc. Although the latter method was employed on *Mariner Mars 1964*, this feature is still available as part of the long-range growth capability of the configuration.

All of these considerations were satisfied by a four-panel configuration. Due to the large and variable required solar panel area, it was recognized at the outset of the study that the shroud height would have to vary to accommodate the panels and the ensuing weight penalty accepted. Since 1 lb of shroud weight cost the spacecraft 1/10 lb, this decision was not unreasonable. Although shroud height was considered variable, an attempt was made to keep the spacecraft envelope within that allowed by a 60-in.-diam shroud of the *Agena*.

2. Electronic Component/Structure Integration

Attempts to structurally integrate electronic packaging and primary structure, took the form of layouts of various sizes and shapes of the spacecraft main electronic compartment. These concepts ranged from cylindrical shapes, with subchassis attached directly to the exterior of the cylinder, to more complex structural shapes, with the subchassis clustered in electronic assemblies that were then mounted as units to a primary structure. The spacecraft components that required access or views of space or reference objects were then distributed over the spacecraft exterior as optimally as possible. The electronic compartment layouts could then be reviewed in light of the competing requirements—packaging, cabling, structural efficiency, temperature control, operational simplicity, propulsion and gas system integration, flexibility and growth potential—with a minimum of concern for the external items. Although these external items do influence the primary structure, their effect was considered secondary relative to the competing characteristics listed above.

B. Mariner M Configurations

The first configuration studied is shown in Figs. 4a and 4b. This configuration and the following one, Fig. 5, were the products of the early study effort. The first configuration attempted to integrate structure and packaging by attaching vertical stacks of subassemblies through longerons to the outside of a central canister. The second configuration reversed this approach by attaching two rows of subassemblies to the inside of a monocoque cylinder. Although these designs were adequate to meet the requirements as they existed at the time of the study, they were discarded during preliminary design as detailed requirements became better defined.

(a) OVERALL ARRANGEMENT

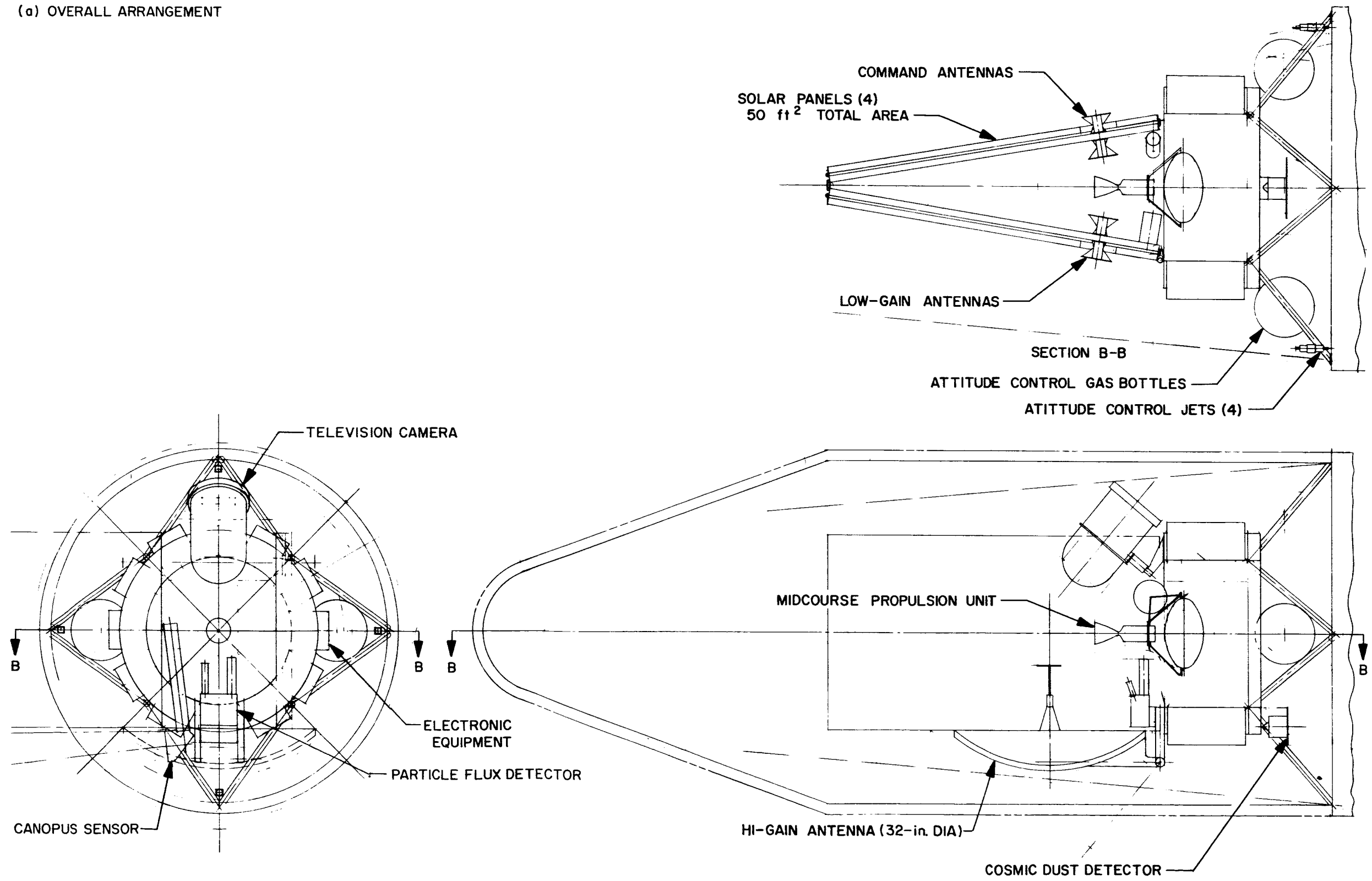

Fig. 4. First *Mariner M* configuration

11-1

-2

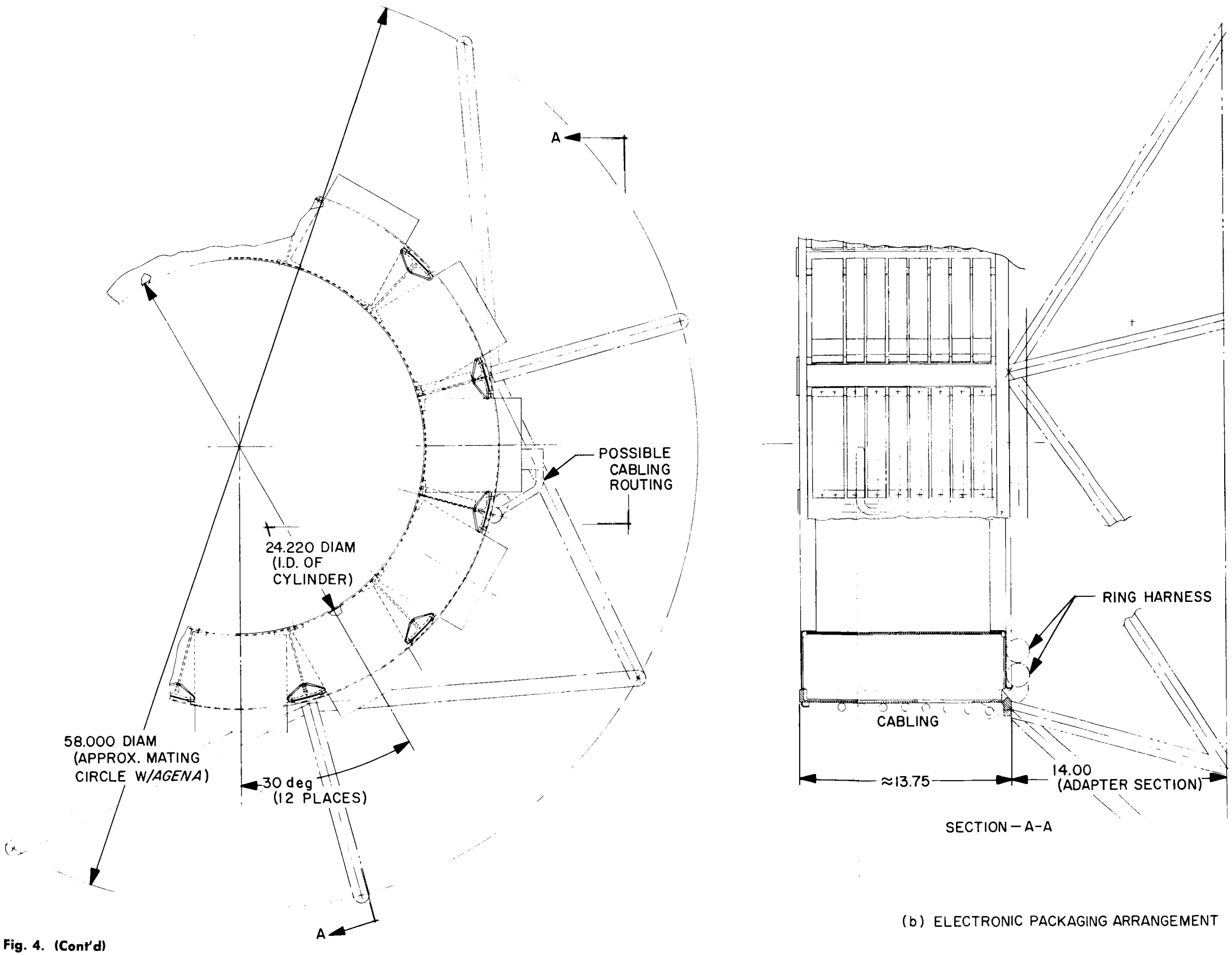

(b) ELECTRONIC PACKAGING ARRANGEMENT

Fig. 4. (Cont'd)

12-1

12-2

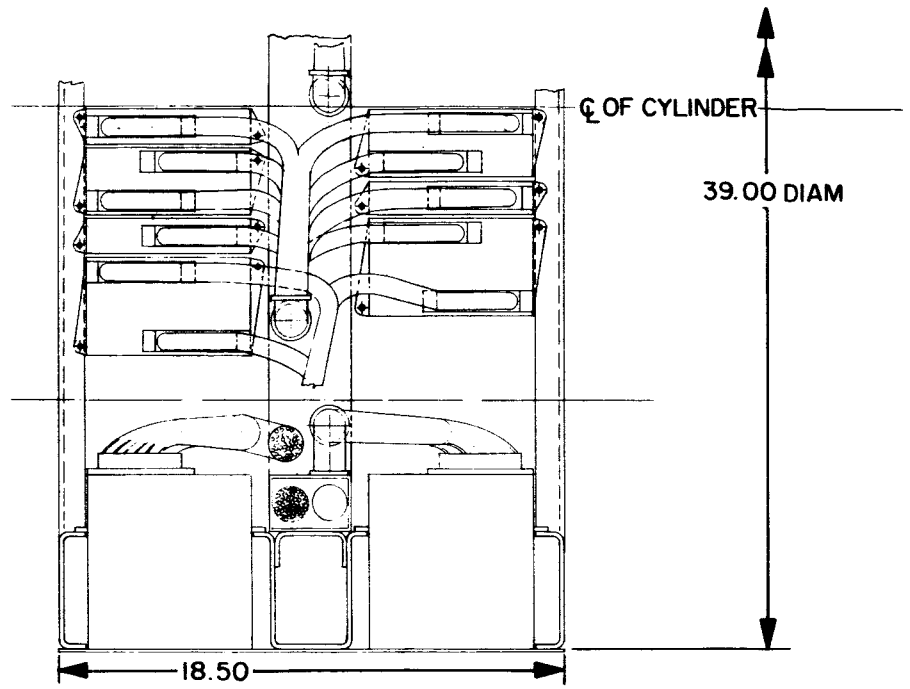

SECTION A-A
ENLARGED TO SHOW ELECTRONIC PACKAGING

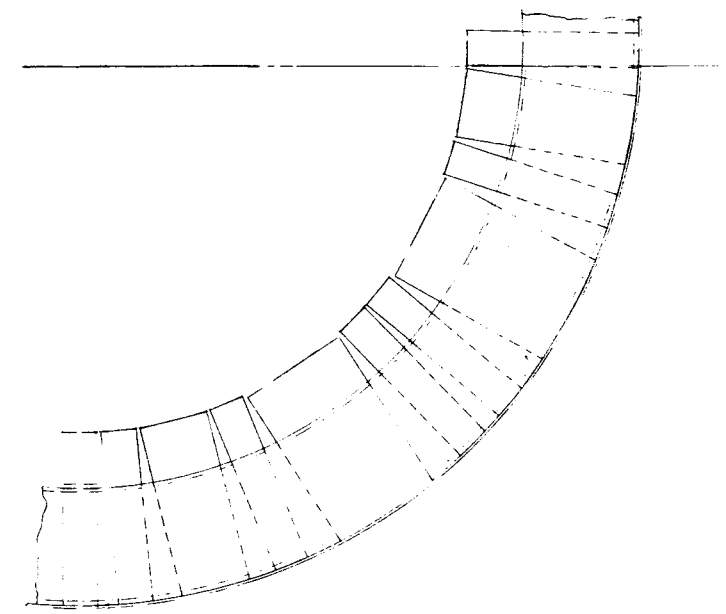

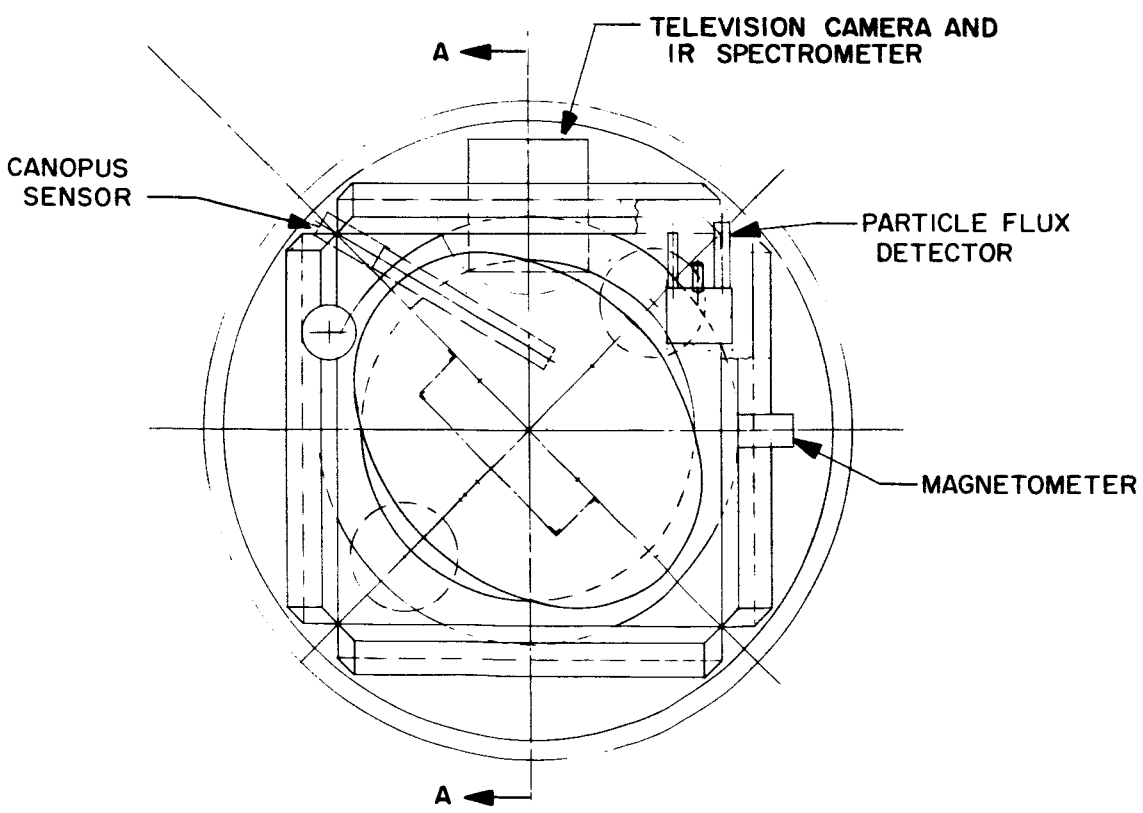

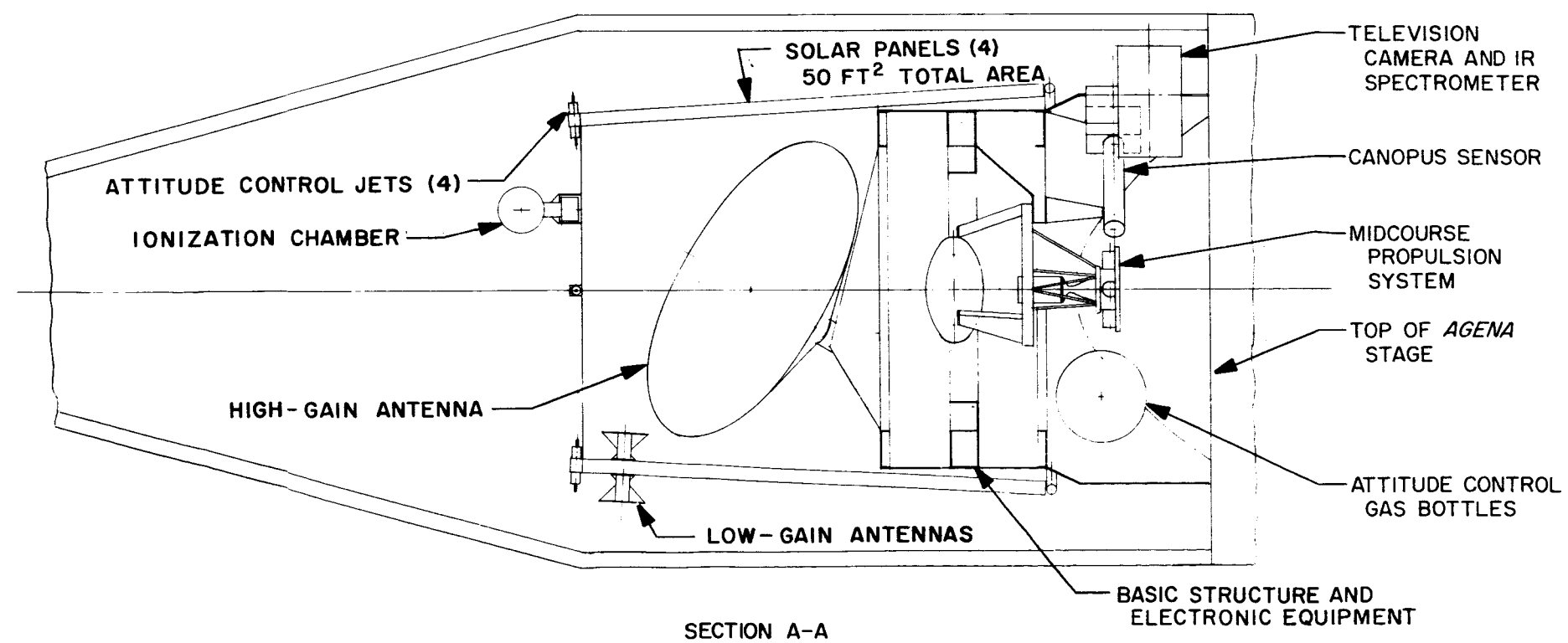

SECTION A-A

Fig. 5. Early study configuration, *Mariner M*

13-1

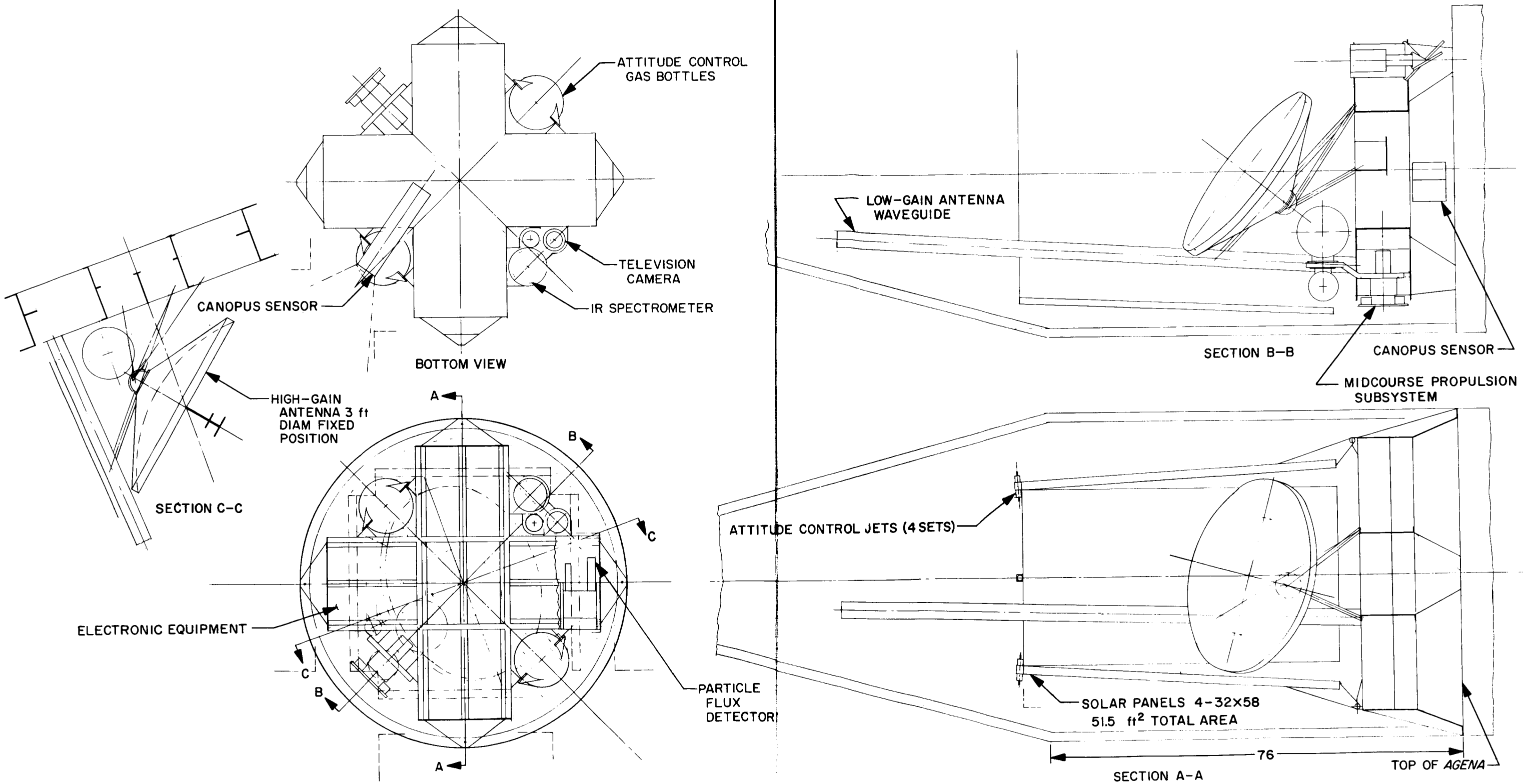

Fig. 6. ***Mariner M*** **cruciform proposal**

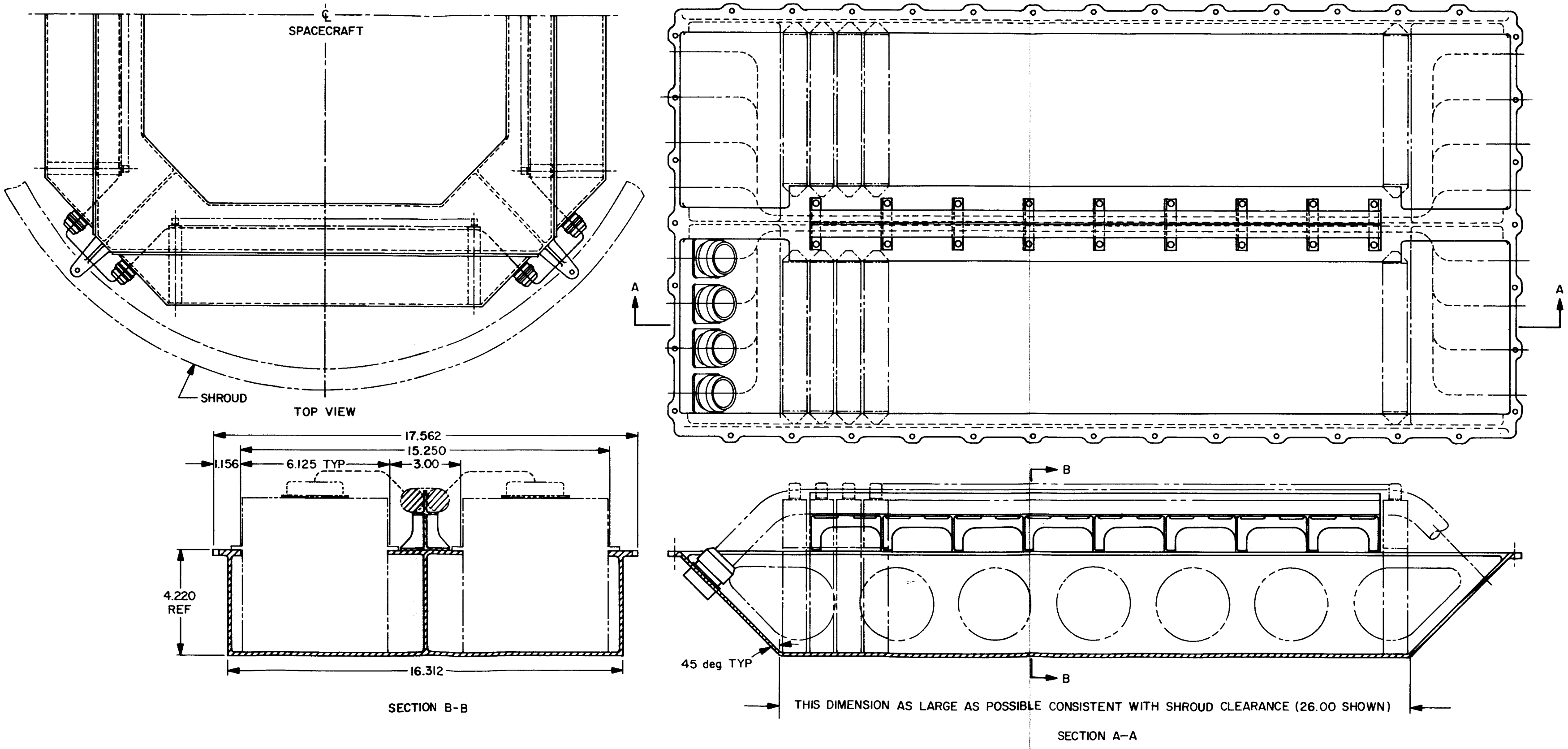

Fig. 7. *Mariner M* square proposal

15-1

15-2

3

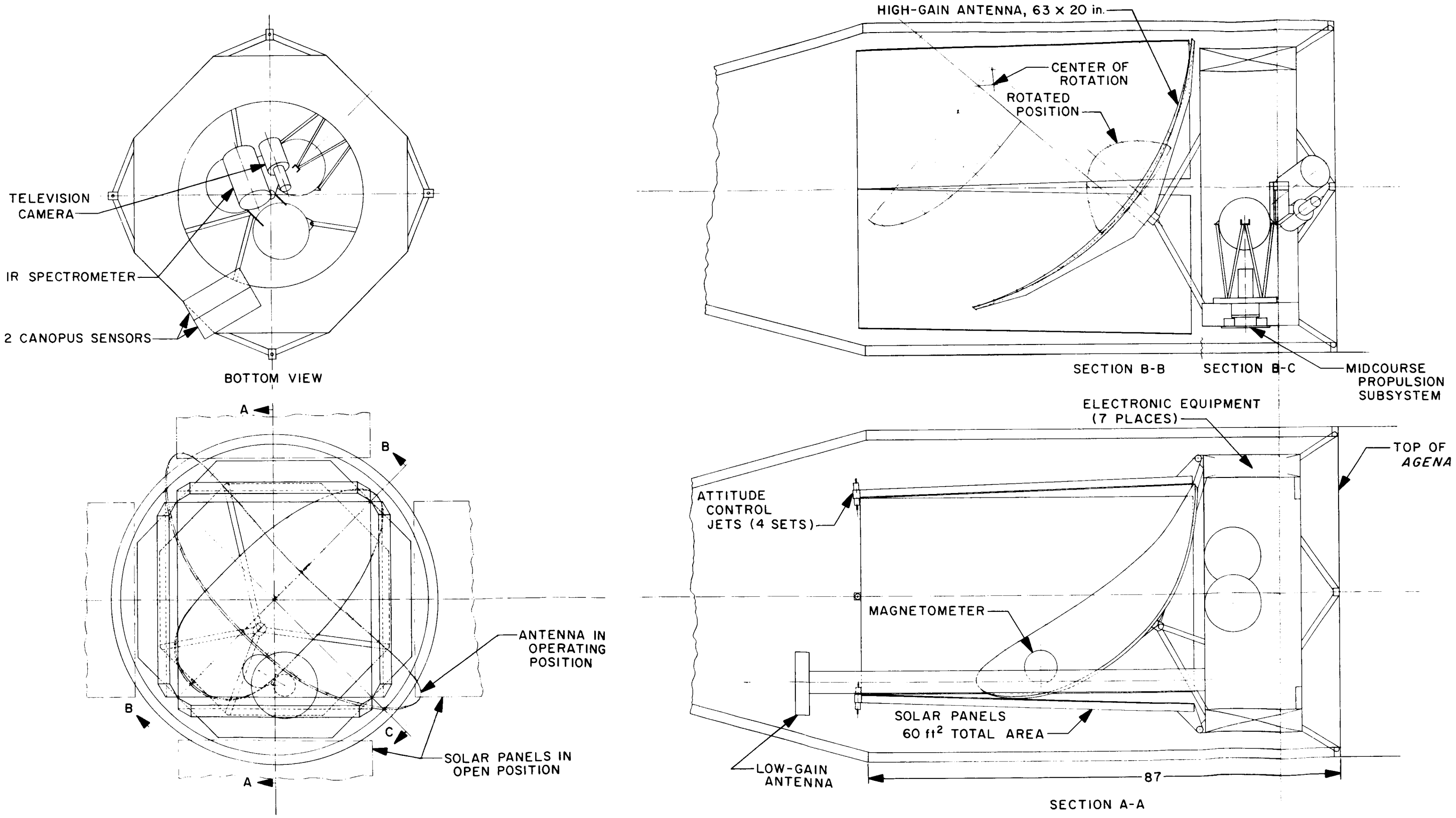

Fig. 8. ***Mariner M* octagon proposal**

16-2

16-3

The fact that they fell from active consideration was indicative of their intrinsic inflexibility. Since they represented the first attempts at the marriage of packaging and structure, they tended to be extreme in this respect and did little to satisfy the remaining, competing requirements. Therefore, the preliminary design process brought forth additional designs for consideration.

C. Choice of Octagonal Structure

During preliminary design, a wide range of configurations was considered that culminated in three basically different shapes—cruciform, square, and octagon. These are shown in Figs. 6, 7, and 8. These configurations served to explore, in greater depth, techniques for the integration of structure and packaging.

The *cruciform* configuration consisted of five horizontal electronic assemblies arranged in the shape of a cross—one on each leg and one in the center. The two attitude control gas storage vessels were located on opposite sides of the cruciform, between legs. The propulsion system and planetary science instruments were located in the two remaining corners between legs. The antennas were mounted on top of the electronic compartment, and the spacecraft attached to the *Agena* at four points (at each leg of the cruciform) on a 60-in. diam bolt-circle.

The *square* configuration consisted of four large (26- × 16-in.) electronic assemblies attached to a square ring-and-longeron structure. This configuration required that the propulsion system be located on the roll axis, and that the scientific instruments be mounted on the top of the spacecraft or off center on the bottom. The spacecraft was attached to the *Agena* at the corners of the square on a 60-in. diam bolt-circle.

The *octagon* configuration consisted of seven bays of electronics and one bay housing the propulsion system. The planetary science experiments were located on a scan platform on the roll axis at the base of the octagon; the antennas were mounted on the top. The spacecraft was attached to the *Agena* on a 60-in. diam bolt-circle at four points through connecting legs between the corners of the octagon to the four attach points on the *Agena*.

Evaluation of the three configurations was accomplished by qualitatively relating them against the factors tabulated below.

Evaluation factor	Configuration		
	Cruciform	Square	Octagon
Structure efficiency	Best	Worst	Middle
Packaging volume	Minimal	Adequate	Adequate
Propulsion system integration	Best	Worst	Middle
Cabling integration	Middle	Best	Worst
Growth potential	Worst	Middle	Best

Since differences in merit of one design over the others were small, the octagon was chosen primarily because it represented a minimum departure from existing JPL technology, and at the same time, assured near-minimum mechanical weight.

Once the octagon shape was chosen, consideration was given to the relative advantages of two electronic subchassis arrangements. The first was the vertical stack, as in *Ranger* and *Mariner II*. The second was in two horizontal rows, with case interconnections along the horizontal centerline of each case. Here again, differences in merit between these two approaches were small and, in some cases, debatable. However, the vertical module arrangement was chosen because it presented a simpler structural interface (ease of assembly and maintenance of alignment) and appeared easier to cable. This choice was in keeping with the philosophy of making a minimum change from *Mariner Venus 1962* or existing JPL technology.

Once the octagon and its integro-packaging-structure approach were chosen, the mechanical configuration proceeded through detail design. The configuration design effort during this phase was concentrated on the detail design integration of the spacecraft subsystems and on the launch vehicle interface. Subsystem and launch vehicle requirements were firmed up and the spacecraft configuration was adjusted to accommodate them. The configuration of the spacecraft, as launched, is shown in Fig. 2.

V. FLIGHT CONFIGURATION DESCRIPTION

A. Structure

The spacecraft basic structure consisted of the octagon, the secondary structure and the superstructure.

1. Basic Octagon

The spacecraft primary electronic compartment consisted of an octagonal structure approximately 18 in. high and 54.5 in. across the diagonal. Seven bays contained spacecraft elctronics. Six of these bays were standard chassis containing standard 6- × 6 in. *Ranger/Mariner R* type subchassis, as well as some special subchassis. The seventh bay housed the battery on its inboard mounting plane, and the power regulator assembly on the outboard mounting surface. Each electronic assembly was secured to the basic structure by screws on the inboard and outboard mounting surfaces, as well as through both the top and bottom rings. In this way the electronic packaging structure carried part of the basic structure loads.

2. Secondary Structure

The upper ring of the octagonal structure contained eight T-section spokes that extended radially inboard to a central hub. This spoke arrangement was the upper part of the secondary structure. The secondary structure also included a central tube that was mounted to the upper ring hub, and an H-frame structure with tube supports at the opposite end of the central tube. Bearings on each end of the tube supported the cantilevered science platform structure and instruments. The science platform structure was rotationally restrained during boost by a pyrotechnic pinpuller that was mounted on the H-frame structure. The two attitude-control-gas vessel and equipment plates were mounted to the H-frame. Each plate was bolted on three sides to the H-frame. Twelve tubes and conventional fittings attached the corners of the H-frame structure to the top ring and to the primary structure. These tubes provided the necessary lateral and torsional stiffness to the gas bottles and science platform.

3. Superstructure

The superstructure was an eight-membered welded aluminum truss that attached to alternate corners of the upper octagonal ring and culminated in a circular top ring that had attach points for the high-gain antenna, one low-gain antenna damper and the solar panel boost dampers. The superstructure also supported the cosmic dust experiment, the upper thermal shield, and portions of the forward equipment cabling.

B. Electronic Packaging and Cabling

The spacecraft electronic assemblies were packaged in 15-in.-wide by 16½-in.-high electronic compartments. The following criteria were used to determine subsystem location in the seven electronic bays:

1. For ease of handling, checkout, and qualification testing, subsystems should be confined to single assemblies.
2. Subsystems requiring many interconnections should be located close together to minimize cable lengths.
3. Subassemblies with high power dissipation should be distributed as uniformly as possible, to aid in spacecraft temperature control.
4. Subsystems should be located on a weight basis to aid in keeping the spacecraft center of mass within allowable limits. (The packaging layout is shown in Fig. 9.)

Subsystem cabling (the case harnesses) were mounted at the center of each electronic assembly, they were run vertically between the subchassis and pigtailed to the upper ring harness mounted on top of the octagon. The lower ring harness cabling was routed about the inboard edge of the lower octagonal ring with pigtails to hard-mounted connectors on individual case harness mounting brackets.

C. Propulsion System

The eighth octagon structure bay contained the midcourse propulsion system, mounted between solar panels to minimize exhaust impingement on the panels during motor firing. This unit was attached to the inboard plane of the bay with the thrust axis approximately normal to the spacecraft roll (Z) axis. The propulsion system mounting/adapting structure was machined after the spacecraft cg was determined so that the thrust axis was pointed through the cg with a minimum error.

A preliminary design study was made to explore the ramifications of performing the midcourse maneuver in a restricted fashion, i.e., without losing Sun orientation with the spacecraft. This possibility was investigated with the thrust vector being both along, and normal to, the Sun probe line. Although the final decision was to design the spacecraft for unrestricted maneuver capability, the

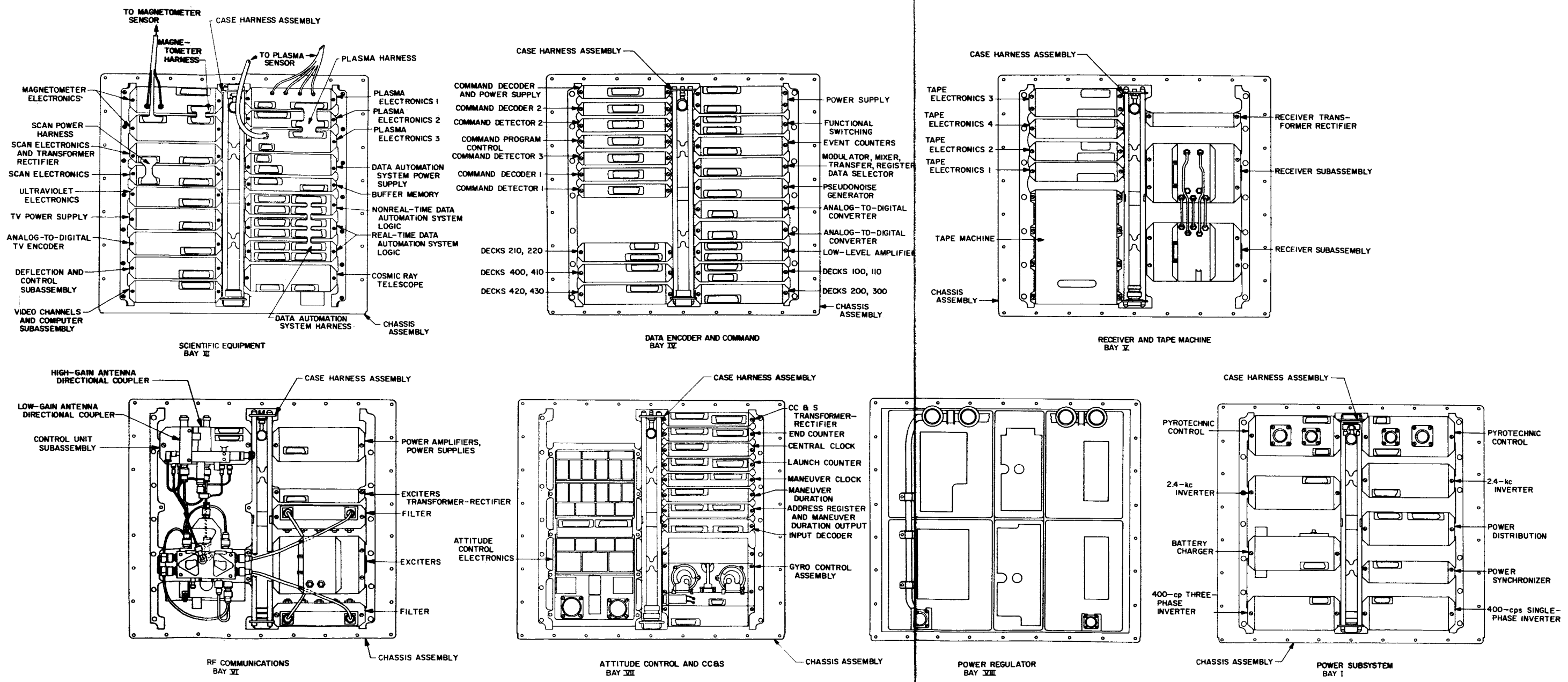

Fig. 9. *Mariner C* electronics packaging assembly

19-1

19-2

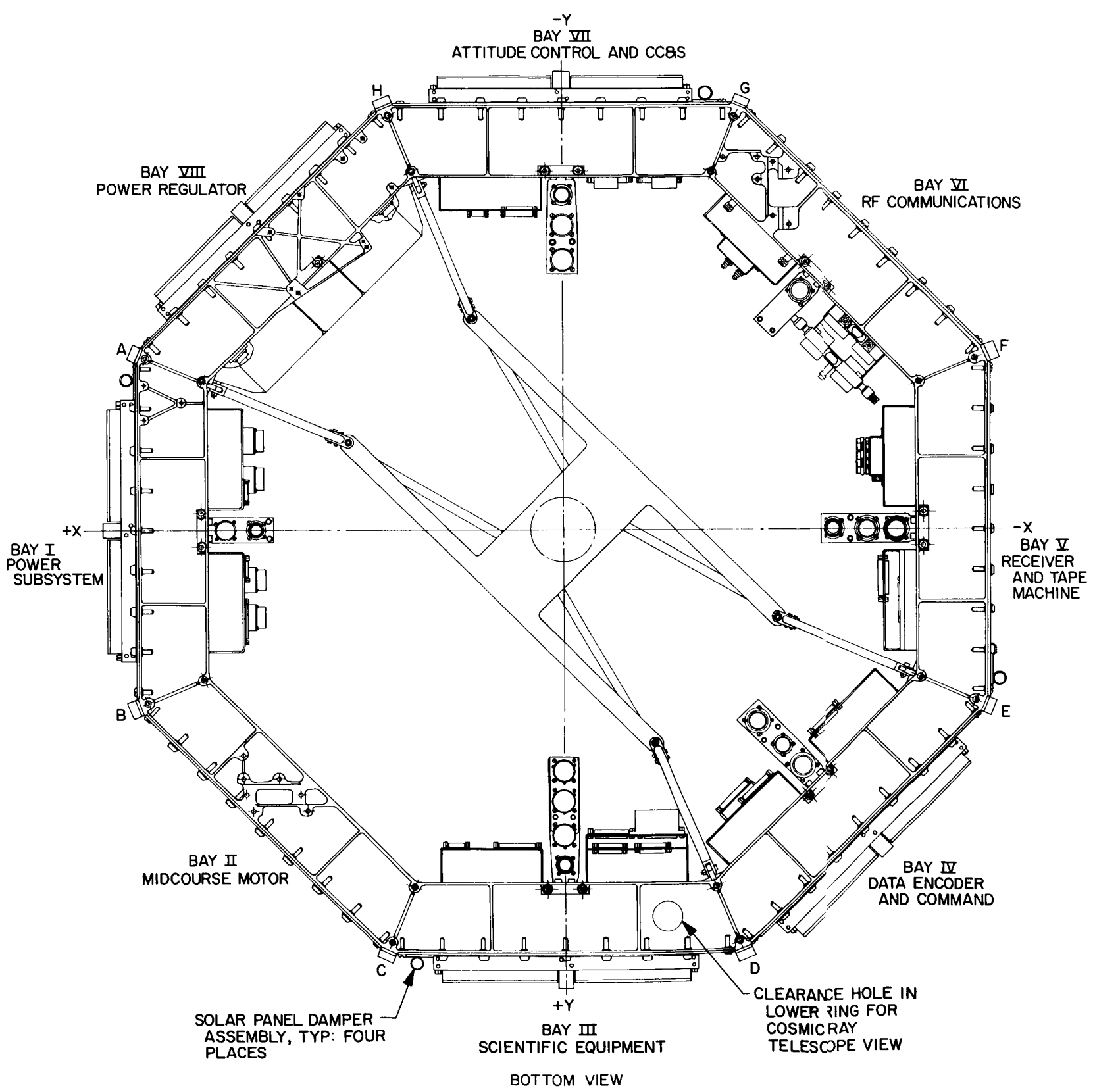

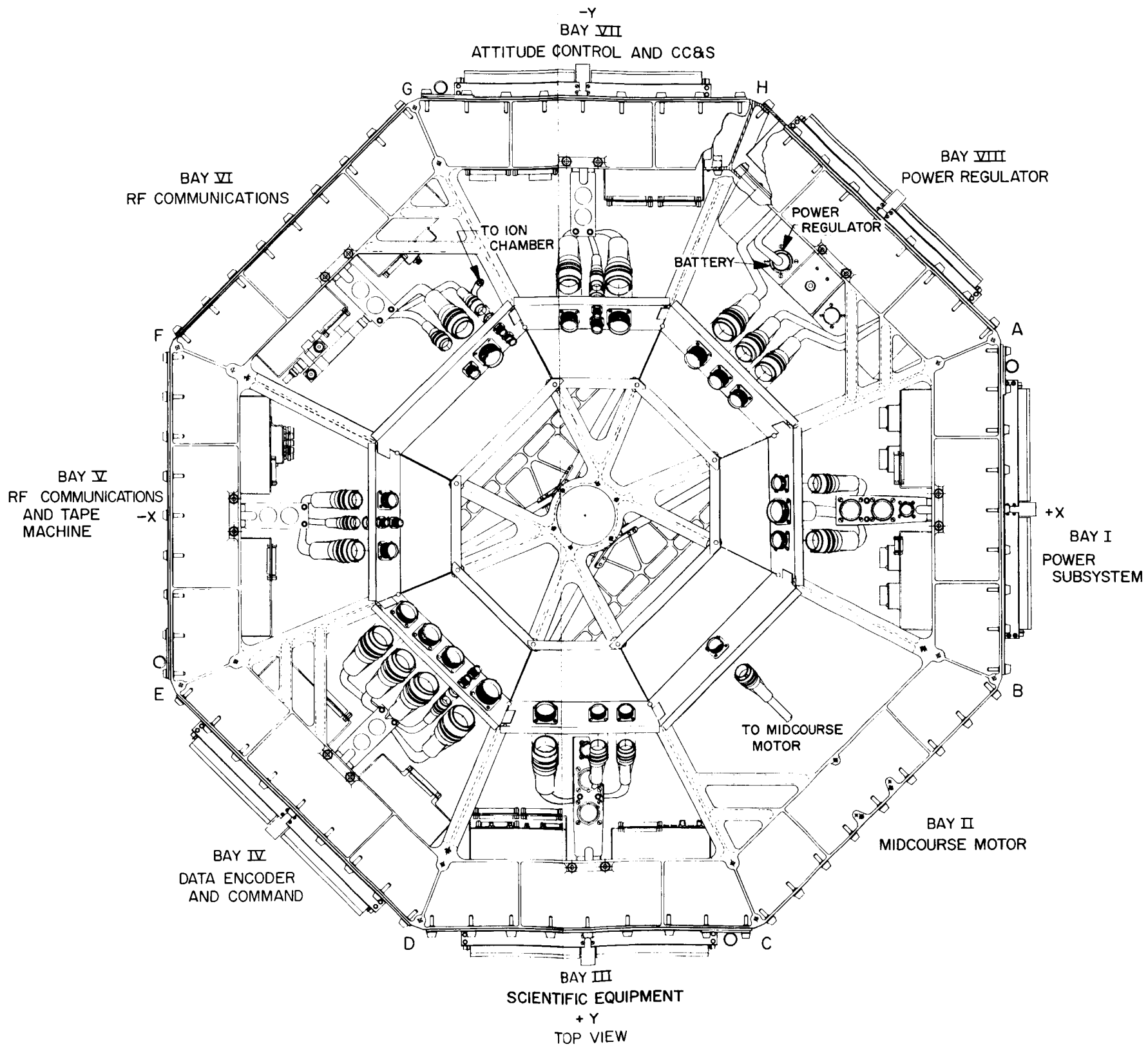

Fig. 9. (Cont'd)

20-1

20-2

20-3

investigation showed that it was desirable, in the octagonal configuration, to mount the motor normal to the Sun probe line for several reasons: (1) an optimum location for planet science experiments was provided, (2) less weight was required to support the propulsion system in a bay than on the roll axis, since the volume was not required for electronics, (3) restricted maneuver capability was still available should it become desirable at a later date, and (4) the midcourse maneuver could be performed with the Earth always in the view of a single low-gain antenna located on the forward end of the spacecraft.

D. Attitude Control Gas System

The attitude control gas system was located on secondary structure internal to the octagon, which was in keeping with the configuration philosophy of locating as much equipment as possible—particularly low- or zero-power items—within the main electronics compartment. Since the gas system dissipates very little electrical power, yet requires relatively close control of temperature, enclosing it in the temperature-controlled volume slaved its temperature to that of the octagon.

The attitude control gas system consisted of two half-systems, either of which was sufficient for controlling the spacecraft should the other fail. Each half-system was mechanically interchangeable with the other. A half-system consisted of a 9-in.-diam spherical storage pressure vessel containing 2.50 lb of nitrogen at 2500 psi. This storage vessel was mounted on an equipment plate that also held the regulator, plumbing, and other gas system equipment. From the equipment plate, low-pressure plumbing was routed through the spacecraft's internal structure to an X axis and a Y axis solar panel, then through a length of flexible tubing across the solar panel hinge line, along a solar panel spar, to a manifold and jets at the center of each solar panel tip. Approximately midway along the panel tubing there was a second short length of flexible tubing for folding the plumbing on the shipping and handling frame, so that the spacecraft height during shipping was compatible with height of commercial transport vans. Each X axis manifold had four jets to give positive and negative yaw-and-roll control, and each Y axis manifold had two jets for pitch control. The roll jets were canted at a 21-deg angle to the plane of the panel end beam so as to minimize jet exhaust impingement on the beam surface. The gas jets were located at the solar panel tips to maximize the reaction-force moment. Gas system cabling was routed from the equipment plate to the jet valves with the plumbing, which acted as the cabling support structure.

E. Solar Pressure Vane System

The solar pressure vane auxiliary attitude control system was also located at the tip of the solar panels. Each assembly was attached to a gas jet manifold. Each vane consisted of an aluminized plastic film attached to a tubular aluminum framework. During the boost portion of flight, the vane was folded, stowed, and latched along the back of the solar panel. After spacecraft separation and the solar panels were unlatched, the vane latch was released by a lanyard attached to the top of the octagon. Springs then erected the vane to a 35-deg angle to the plane of the panel and deployed the vane to provide 7-ft^2 of reflecting surface. The inboard vane edge was tapered away from the end of the panel to avoid impingement due to gas jet exhaust. Once erected and deployed, the vanes were driven by an electrical actuator linked electrically to the gas jet system to eliminate solar pressure perturbing torques. A bimetallic strip in series with the electrical actuator sensed a thermal input from sunlight to provide damping to the spacecraft motion through the vanes.

F. Solar Panels

The primary source of spacecraft power was derived from photovoltaic cells mounted on panels that were normal to the Sun rays during the cruise portion of flight. Spacecraft power requirements dictated that 70 ft^2 of solar panel area would be required. Evolution of the spacecraft configuration indicated that this area could best be provided by four rectangular panels. A rectangular shape was chosen because it could be utilized efficiently for mounting rectangular solar cells. The four panels were attached to the top of the octagon at Bays I, III, V, and VII. Each 71.4- by 35.5-in. panel was mechanically and electrically interchangeable with any other panel. Each panel was attached to the octagon at two points through a clevis, close tolerance bolt, monoball joint. During boost, the panels were folded to a nearly vertical position above the spacecraft to comply with shroud clearance requirements. The panel tips were inclined inboard 0.6 in. beyond the vertical to allow adequate shroud clearance during boost and during shroud jettison. Each panel was supported in this attitude by two viscously damped struts between brackets on the panel and clevises on the spacecraft superstructure. Dampers were used to support the panels to lessen the severity of the dynamic loading on the panel during the ascent phase

of flight, which minimized panel weight by allowing thin gauge materials to be used for the panel structure.

During flight, at a fixed time after separation of the spacecraft from the *Agena*, the panels were separated from their damper supports by means of pyrotechnically actuated pinpullers located at the interface of the damper and the solar panel bracket. The panels were then deployed, approximately 90 deg, to a plane normal to the Sun's rays after Sun stabilization. Panel deployment was accomplished by clock spring actuators located at the hinge point on one spar on each panel. On reaching the deployed position, the panels engaged a latch between the cruise damper located on front of the panel bay and the base of the panel spar. The cruise damper functioned as a positive latch to locate the panel and absorb its deployment energy, as well as to isolate panel vibrations from the guidance autopilot during firing of the midcourse propulsion system.

G. Attitude Reference Sensors

Once the solar panels were fully deployed, an essentially unrestricted field of view was provided for the Sun sensors located atop pedestals on Bays II and VI. These sensors provided error signals to the attitude control system thereby permitting the spacecraft to find and lock on the Sun. The primary Sun sensors were mounted on pedestals to provide minimum interference with their fields of view from the high-gain antenna, solar panel dampers, pinpullers and cabling, solar panels, and brackets. Since the Sun sensors were most sensitive in their zenith direction, the panel dampers, pinpullers and wiring, being above the sensors, were kept toward the spacecraft centerline and beyond the sensor view. However, the solar panel brackets protruded slightly into their view after panel deployment. Sensor/bracket tests for this configuration indicated this situation was tolerable and obviated the need to increase the pedestal height. In this way the pedestals were designed to be sufficiently high to eliminate intolerable obstructions to Sun sensor fields of view by the solar panels or panel-mounted items.

The remainder of the Sun sensor system consisted of secondary sensors on the bottom of the spacecraft and a Sun gate mounted on the Bay II pedestal. The secondary Sun sensors were located to provide a hemispherical view on the aft end of the spacecraft and in conjunction with the primaries allowed 4π steradian coverage. The Sun gate is a narrow-angle (3-deg half-angle cone) Sun sensor that informs the attitude control logic when the Sun is within its field of view (acquired) and automatically initiates a reacquisition sequence should the Sun pass from its view. The Sun gate was mounted near the Bay II Sun sensor for ease of alignment and for minimizing cable complexity.

The remainder of the attitude reference system consisted of a Canopus star tracker mounted at the base of Bay VIII and an Earth detector mounted on the side of the Bay VI Sun sensor pedestal. The star tracker identifies the star Canopus and uses it as a spacecraft roll reference. The Earth detector is used to confirm that the star tracker has, indeed, found Canopus by being positioned such that, early in the flight, if the tracker is locked on Canopus, the Earth detector will sense light from Earth. The Canopus sensor was located at the bottom of the spacecraft to minimize Sun illumination on it; and it was located in Bay VIII to provide an optimum field of view and scan amplitude for the planet science experiments.

H. Antennas

The *Mariner* radio antenna subsystem comprised a low-gain antenna and a high-gain antenna. The low-gain antenna was a 4-in.-diam thin-wall aluminum tube mounted on top of the spacecraft and aligned parallel to the roll axis. The tube performed as both waveguide and antenna support structure. The top of the tube was crimped in a cruciform shape and held a 7-in.-diam ground plane to control the antenna pattern. The antenna radiated directly from the cruciform aperture. The tube was attached at its base to the top of the octagon and was supported at approximately ¼ its length by two damped struts approximately 90 deg to each other. One damper ran from the antenna to a corner of the octagon, the other from the antenna to the top ring on the superstructure. The dampers used here were similar to those used for solar panel support and were used for the same reasons—to reduce dynamic loading and, thereby, minimize weight. The low-gain antenna was 88 in. long so that in the boost configuration it would extend 12 in. above the tips of the stowed solar panels to assure an acceptable antenna pattern. Antenna location was as near the spacecraft roll axis as practical to enhance roll symmetry for the antenna pattern.

The high-gain antenna was a parabolically contoured dish that, in plan form, was an ellipse with a 46-in. major axis and a 21-in. minor axis. The dish was attached, through a support truss, at three points to the spacecraft superstructure. The support truss held the antenna at a fixed 38-deg angle to the spacecraft roll axis. The super-

structure mounting-hole pattern fixed the antenna, measured in the spacecraft X-Y plane, at a 259-deg angle from the optical axis of the Canopus tracker. In this way, the antenna was fixed to point at Earth when the spacecraft arrived at Mars. The elliptical antenna configuration shapes the beam to provide communications significantly before and after the Earth passes over the point of maximum antenna gain. The high-gain antenna support scheme nested the dish among the panels, dampers, and other components to allow adequate clearance with a minimum of structural weight.

I. Science

The spacecraft science subsystem consisted of cruise science experiments mounted about the spacecraft, and planet science experiments mounted on a scan platform at the bottom center of the spacecraft. Cruise science experiments included: magnetometer, ion chamber, cosmic dust detector, trapped radiation detector, solar plasma collector and a cosmic ray telescope. The experiments were located to satisfy their field-of-view requirements without significantly compromising other spacecraft subsystems. The magnetometer was located near the top of the low-gain antenna waveguide to separate it from the main mass of spacecraft, but it was far enough from the antenna top to prevent interference with the antenna pattern. Since it is spherically sensitive, the ion chamber experiment was located on the waveguide where it would be provided maximum field of view without significantly affecting the high-gain antenna pattern or magnetometer measurements. The remainder of the cruise instruments were located to satisfy the individual requirements.

The planet science experiments originally consisted of television and IR spectrometer experiments. Later, the IR device was exchanged for an ultraviolet photometer. Still later, the UV device was replaced by an inertial thermal simulator. The planet package finally consisted of the television, the simulator, and two planet sensors, a wide-angle acquisition sensor for finding the planet, and a narrow-angle Mars gate to initiate the data-recording sequence. These instruments were mounted on the scan platform at a 120-deg angle to the spacecraft -Z axis to optimize visual lighting conditions at the planet. The platform was driven by a scan actuator mounted on the top of the octagon through a tube running along the center of the spacecraft to the platform. The actuator was capable of scanning the platform through a 180-deg roll angle.

J. Temperature Control

The spacecraft temperature control system covered the entire vehicle. From the beginning of the design, the configuration was shaped to minimize thermal problems by providing: a primary electronic compartment shielded from the Sun; primary radiating surfaces to which louvers could be attached to handle power fluctuations; enclosure of temperature-critical items within the electronic compartment where possible; and a relatively thermally clean exterior, with a minimum of protrusions and re-entrant corners. Temperature control was accomplished by passive means (coatings and shields) where feasible; louvers provided on six bays handled internal power fluctuations, as well as analytical and test uncertainties. Flexible thermal shield blankets covered the top and bottom of the spacecraft, and rigid aluminum shields covered the remaining sides of the octagon structure not housing louvers.

K. Adapter Interface

The spacecraft attached to the *Agena* through a conical transition section (adapter) mounted on the top of the booster's forward equipment rack. At the eight corners of the octagon, the spacecraft was secured by shoes mating the adapter and spacecraft feet in a V-shaped groove. The eight shoes were secured by a V-band running around the eight corners with sufficient tension to provide a radial force and keep the spacecraft and adapter mated. The V-band was separated in flight by two explosive devices at opposite sides of the vehicle. Either device was adequate to free the V-band and, thereby, remove the shoes and allow separation. The spacecraft was then ejected by four springs located at alternate corners of the spacecraft in the adapter. Other functions provided by the adapter included (1) pads to safe the pyrotechnic arming switch and the separation initiated timer until spacecraft separation, (2) linear potentiometers to provide measurements of spacecraft tip-off velocities, and (3) a sealing diaphragm to separate the spacecraft from the environment of the *Agena* forward equipment rack.

VI. RELATIVE IMPORTANCE OF DESIGN REQUIREMENTS

The experience gained in the design of the *Mariner* mechanical configuration indicates that the relative importance of various requirements must be established. The most rigid requirements are the *antenna and celestial sensor fields of view*. The effect of nearby spacecraft objects on antenna patterns is generally unpredictable, except in extreme cases. Therefore, antenna view requirements are usually conservative and verification by test is usually too late to permit significant configuration modifications. Celestial sensors, on the other hand, are optical instruments whose views can more analytically be determined. However, Sun sensor views can be compromised somewhat in the extremes of their view and are relatively quick and easy to test and verify. Conversely, the star sensors are such sensitive instruments that the potentially catastrophic effects of objects far removed from the sensor view are not commonly appreciated. Tests to determine optical isolation of star sensors require detailed, full-scale spacecraft models, collimated sunlight and considerable time. Therefore, during design, considerable effort should be directed to isolating star sensors from any reflected light.

Solar panel requirements are the next most rigid subsystem requirements. The relatively large areas involved and the requirement for near normal solar illumination leave little design flexibility. The *Mariner Mars 1964* solar panel was an extremely lightweight design and very fragile. For this reason it became extremely desirable to arrive at a configuration that permitted relatively late installation of solar panels during preparation for flight.

The propulsion system integration problem is the next highest priority item. Thrust vector pointing requirements necessitate adjustment capability for positioning the nominal thrust vector relative to the spacecraft center of mass. Additionally, a large distance between the center of mass and the effective center of rotation of the thrust vector is desirable to maximize the capability of the control system to adjust for centers of mass/thrust vector offsets due to initial uncertainties or migrations. Therefore, the propulsion system integration problem is one of estimating the center of mass location and the magnitude of adjustment capability required early in the design with sufficient margin to handle the design changes that will occur prior to flight. Finally, the propulsion system is a hazardous item; therefore, provision must be made for installing it late in the flight preparation mechanical sequence.

Operational simplicity is the fourth ranking design requirement. The benefits of this requirement for both spacecraft performance and ground test operations have been discussed previously and will not be reiterated here. It may suffice to say, however, that the nature of preflight preparation is such that there is little margin for error or mechanical accident.

The fifth ranking design requirements are imposed by the *scientific and temperature control subsystems*. This ranking is not an arbitrary measure of subsystem importance, but rather an indication of flexibility of the configuration in meeting their requirements. Temperature control configuration requirements are generally philosophical, such that once the gross guidelines are satisfied, the detailed requirements can be satisfied with moderate effort. On the other hand, the scientific subsystem requirements are varied and specialized, depending on the nature of the particular instrument, and can be satisfied with minor effects on the configuration. It has been noted that, once a gross configuration has been selected, the scientific instruments can be placed on it much like ornaments on a Christmas tree. Even a particular instrument requirement can be iterated to conform to mechanical configuration constraints. Such an example is the *Mariner Mars 1964* solar plasma experiment. Original requirements for this instrument called for an unobstructed hemispherical view along the Sun line. There was no reasonable position on the *Mariner Mars 1964* configuration that met this requirement. After further consideration, instrument requirements were modified such that the instrument could be located on the spacecraft basic structure and still perform its measurements adequately.

VII. EVALUATION OF SPACECRAFT CONFIGURATION

Although the *Mariner Mars 1964* mechanical configuration satisfied all of the design requirements imposed upon it, in the light of the evaluation criteria previously discussed, there are two areas that could be improved: (1) short-range growth potential and (2) ground operations. Obviously, in these areas as well as in others, improvements are possible, but without a detailed design proposal and evaluation, the attendant costs cannot be assessed.

A. Short-Range Growth Potential

The *Mariner Mars 1964* spacecraft had rather limited short-range growth potential. The spacecraft was very tightly packaged within the shroud and the high-gain antenna was tightly nested within the spacecraft forward section. For these reasons, little could be done to increase the capability of the spacecraft without causing gross changes to the shroud and/or spacecraft. Although the electronic compartment (octagon) was such that packaging volume could be increased by merely making the octagon higher, this would raise the solar panels and precipitate interference problems with the shroud. Also, it would logically follow that a need for more electronics would indicate a need for more power and, hence, more solar cell area, which would compound the solar panel/shroud problem. Tilting of the panels would not be possible because of the limited clearance with the low- and high-gain antenna.

The antennas also have limited clearance between themselves, the solar panel dampers, and the Sun sensor fields of view such that all but minor changes in their locations or pointing directions would cause modification to other portions of the structure and to other subsystems. Similar conditions exist in other areas of the configuration.

It might be argued that some changes are minor and have little effect on the total configuration, but experience indicates the contrary. Even the smallest modifications tend to *snowball* such that when all the ramifications are considered, the change may not be worth it. For example, during preliminary design, the feasibility of improving antenna coverage by changing the high-gain antenna position by effectively rotating the reflector through a small (approximately 10 deg) angle about its parabolic axis was studied. The following spacecraft elements were affected by this change:

Antenna

Antenna support truss

Superstructure

Solar panel boost dampers

Canopus sensor

Canopus sensor mount

Planet science instruments

Scan platform

Adapter diaphragm

Adapter

Shroud

After analysis, the effect of this seemingly minor change could be summarized by a several-inch increase in adapter and shroud length. When the weight penalty associated with this change was considered, it was decided that additional coverage was not practical.

However, in a long-range sense, the design concepts of the *Mariner Mars 1964* spacecraft may have considerable growth potential. In adapting new equipment to proven design concepts, the following types of changes may be made at reasonable costs:

1. Packaging volume can be increased by increasing the height of the octagon.
2. Increasing the height of the shroud should not be difficult on a new program.
3. Adapting to another higher performance launch vehicle may be feasible.
4. A small planetary entry capsule can be added to the spacecraft in the present scan platform location.
5. The configuration could be adapted to include a movable high-gain antenna.
6. Improved electronic packaging techniques can be adapted to the *Mariner* integro-packaging/structure concept.
7. Additional science and/or guidance sensors could be added.

An honest evaluation of the suitability of the spacecraft for a new mission must consider the particular mission requirements. However, for the reasons listed above, the *Mariner Mars 1964* spacecraft has an overall long-range growth potential.

B. Ground Operations

In general, the mechanical configuration of the *Mariner Mars 1964* spacecraft tended to simplify ground operation. The spacecraft was relatively easy to work on, and adequate accessibility to all major subsystems was provided. However, there are two areas of possible improvement:

1. Attachment of the solar panels to the boost dampers
2. Installation of the attitude control gas system

The major difficulty in latching the panels arose from the pin-pullers being attached to a bracket on the front face of the panel at about one quarter of the panel length. This operation was difficult and dangerous to the spacecraft because it required technicians to assume awkward positions over the fragile panel structure and to use tools near the solar cells and portions of the high-gain antenna. All of this equipment was fragile, and there was little allowable margin for error. Latching of the last panel, which was particularly difficult, was partially alleviated by attaching the pin-puller to the bracket before the bracket's attachment to the panel, then feeding the bracket through a hole in the panel and attaching it to the panel spar structure. Although this procedure was more time consuming, there was less hazard to the solar cells. However, mechanical operation was still required near the back face of the panel, which was more fragile even than the solar cells.

Three elements contributed to the problem of installing the gas system: (1) a complicated mechanical interface, (2) a relatively fragile system, and (3) the fact that each gas system was a sealed unit that could not be opened during installation. Because the gas, which was stored in vessels within the octagon, had to be routed to gas nozzles on the tips of the panels, the plumbing between the two points had to snake through and attach to various portions of the structure and be routed across the solar panel deployment axis and along the length of the panel. The situation was further complicated by the requirement that each half of the gas system be mechanically interchangeable with the other. Although threading the semi-rigid stainless steel plumbing (¼-in.-diam, 0.016-in.-wall) through the spacecraft structure presented a hazard to both the spacecraft and the gas system, the fit was so close that protective devices and guides could not be used. Finally, there was additional hazard to the back of the solar panel, since the plumbing had to attach to the solar panel structure.

The ground operational problems described above may have been alleviated by modifications to the configuration; however, the relative worth of these changes cannot be assessed here. They did exist in the *Mariner Mars 1964* program, but were either solved or circumvented such as to have no catastrophic effects. Such problems are pointed out here so they may be avoided on future programs.

VIII. CONCLUSIONS

The *Mariner Mars 1964* mechanical configuration satisfied all the requirements imposed on it. The experience gained in its design will prove valuable in design of future configurations. It is hoped the conclusions and recommendations made here will benefit other programs.

A. Problems from Interrelated and Conflicting Requirements

Although on the surface the task of spacecraft mechanical configuration design appears to be simple, there are so many interrelated, and sometimes conflicting, requirements that an equitable distribution of compromises is difficult to achieve. Configuration design, except in limited areas, is difficult to quantify. For this reason the rationale for shaping a design a particular way is frequently subjective and occasionally debatable. Therefore, the *whys* may be difficult to justify. Further, the situation is complicated by the fact that the spacecraft configuration results from an evolutionary process; therefore, the original reason for doing things a particular way may disappear after the design has become too firm to change.

B. Gains from Slight Subsystem Modifications

Subsystem requirements are generally flexible; this is a matter of degree and a function of the particular subsystem concerned. In many instances, system weight and reliability gains can be achieved through only slight modifications of initial requirements.

C. Need for Flexibility in Integration of Temperature Control System

The configuration should allow for late detail definition of the temperature control subsystem. Because of spacecraft system changes and the nature of the temperature control subsystem, such implementation details as coatings, shields, and active devices may be changing up to the time the spacecraft is being prepared for flight. Therefore, it is essential that the interfaces with the thermal elements be defined such that the elements can be added, modified, or removed without having gross effects on the total configuration.

D. Need for Early Consideration of Assembly and Handling Processes

The assembly and handling process and sequence should be understood and factored into the configuration design. The human engineering aspects that affect both personnel and spacecraft safety must be considered in the spacecraft configuration. Design objectives include minimizing assembly and handling time and, at the same time, minimizing opportunity for error.

E. Greatest Structural Efficiency Effected in Initial Design Phase

The greatest gains in structural efficiency are made in the initial concepts of a configuration. It is during the earlier evolutionary phases of a spacecraft configuration that launch-vehicle and subsystem interfaces, as well as packaging concepts, are defined. At this time, support and latch points and primary load paths are chosen, and the efficiency of a structure is determined. As detail design proceeds, some additional weight can be pared from the structure, but later refinements usually offer small weight savings compared with those achievable during design formulation.

F. Dependence of Subsystem Developments on Mechanical Configuration

Subsystem developments are made easier and system reliability is increased by a good mechanical configuration. Selection of support and latching points determines the dynamic environment of structural elements. The degree of smoothness of the spacecraft exterior affects the complexity of temperature control analysis and test. Development tasks in these areas, as well as others, can be simplified through the proper choice of configuration.

G. Necessity for Overall Program Awareness

The mechanical configuration designer's job is primarily a structural one. However, since he must interface with every spacecraft subsystem and operational environment, the task is best accomplished by one who has a broad understanding of overall system problems.

BIBLIOGRAPHY

Carroll, W., Coyle, G. G., and von Delden, H., *Mariner Mars 1964 Temperature Control Hardware Design and Development*, TR 32-955, Jet Propulsion Laboratory, Pasadena, California (In preparation).

Coyle, G., *Mariner IV Science Platform Structure and Actuator Design, Development and Flight Performance*, TR 32-832, Jet Propulsion Laboratory, Pasadena, California, 15 November 1965.

Hough, W., and Schmuecker, J. D., *Mariner Mars Inertial Properties, Determination and Midcourse Alignment*, TR 32-852, Jet Propulsion Laboratory, Pasadena, California (In preparation).

BIBLIOGRAPHY (Cont'd)

Layman, W., *Mariner Mars 1964 Antenna Structure, Design and Development*, TR 32-952, Jet Propulsion Laboratory, Pasadena, California (In preparation).

Lewis, D. W., *Mariner Mars 1964 Temperature Control Subsystem*, TR 32-957, Jet Propulsion Laboratory, Pasadena, California (In preparation).

Lyman, P. T., *Mariner Mars Solar Panel Structure, Boost Restraint and Deployment; Design and Development*, TR 32-956, Jet Propulsion Laboratory, Pasadena, California (In preparation).

Project Team, *Mariner Mars 1964 Project Report, Mission and Spacecraft Development*, Volumes I and II, TR 32-740, Jet Propulsion Laboratory, Pasadena, California (In preparation).

Schmuecker, J. D., and Spehalski, R. J., *Mariner Mars Basic Structure Design and Development*, TR 32-953, Jet Propulsion Laboratory, Pasadena, California (In preparation).

Schutz, F. L., et al., *The Mariner Mars Science Subsystem*, TR 32-813, Jet Propulsion Laboratory, Pasadena, California, 15 February 1966.

Spehalski, R. J., *Mariner Mars 1964 Mechanical Test and Operations*, TR 32-954, Jet Propulsion Laboratory, Pasadena, California (In preparation).

Thostesen, T. O., and Lewis, D. W., *The Mariner Mars 1964 Absorptivity Standard*, TR 32-734, Jet Propulsion Laboratory, Pasadena, California, 1 March 1966.