https://ntrs.nasa.gov/search.jsp?R=19660027827 2018-05-25T16:35:03+00:00Z

DOCUMENT NO. 66SD4388

20 JULY 1966

EIGHTH QUARTERLY PROGRESS REPORT FOR THE APPLICATIONS TECHNOLOGY SATELLITE GRAVITY GRADIENT STABILIZATION SYSTEM

1 APRIL THROUGH 30 JUNE 1966

CONTRACT NO. NAS 5–9042

FOR THE

NATIONAL AERONAUTICS AND SPACE ADMINISTRATION
A.H. SABELHAUS
ATS TECHNICAL OFFICER

APPROVED BY

R. J. KATUCKI, MANAGER
PASSIVE ATTITUDE CONTROL PROGRAMS

GENERAL ELECTRIC
SPACECRAFT DEPARTMENT
A Department of the Missile and Space Division
Valley Forge Space Technology Center
P. O. Box 8555 • Philadelphia, Penna. 19101

TABLE OF CONTENTS

Section		Page
	ABSTRACT	vii
1	INTRODUCTION	1-1
	1.1 Purpose	1-1
	1.2 Program Contract Scope	1-1
2	SYSTEMS ANALYSIS AND INTEGRATION	2-1
	2.1 Event Summary	2-1
	2.2 ATS-D Inversion using Rod Retraction and Extension	2-3
	2.2.1 Discussion	2-3
	2.2.2 Conclusions	2-6
	2.3 Effect of Scissor Angle on Performance of ATS	2-7
	2.3.1 ATS-A Results	2-7
	2.3.2 ATS-D Results	2-10
	2.3.3 Conclusions	2-13
3	BOOM SUBSYSTEMS	3-1
	3.1 Key Events	3-1
	3.2 Primary Booms	3-1
	3.2.1 Tip Mass Uncaging	3-1
	3.2.2 Boom Element Cracking	3-10
	3.2.3 Clutching	3-11
	3.3 Damper Boom	3-12
	3.4 Testing	3-12
	3.5 Unit Status	3-12
	3.5.1 Prototype P2-B	3-13
4	COMBINATION PASSIVE DAMPER	4-1
	4.1 Hardware Status	4-1
	4.2 Design and Development	4-1
	4.2.1 General	4-1
	4.2.2 Flight Unit Modifications	4-1
	4.2.3 Drawing Revisions	4-2
	4.2.4 Procurement and Manufacture	4-2

TABLE OF CONTENTS (CONT'D)

Section		Page
	4.3 Testing and Test Equipment	4-3
	4.3.1 Prototype 1	4-3
	4.3.2 Prototype 2	4-4
	4.3.3 Engineering Unit 2	4-5
	4.3.4 Test Results	4-5
	4.4 Failure Analyses	4-5
	4.4.1 Lamp	4-5
	4.4.2 Solenoid	4-6
5	ATTITUDE SENSOR SUBSYSTEM	5-1
	5.1 TV Camera Subsystem	5-1
	5.2 Solar Aspect Sensor	5-4
	5.2.1 Solar Aspect Sensor Tests	5-4
	5.2.2 Solar Aspect Sensor Qualification Tests	5-8
	5.3 Power Control Unit	5-8
	5.3.1 Primary Boom Pyrotechnic Uncaging	5-13
	5.3.2 Engineering Units	5-13
	5.3.3 Prototype PCU	5-14
	5.3.4 Flight PCU Units	5-14
6	GROUND TESTING	6-1
	6.1 Subsystem Evaluation Tests	6-1
	6.1.1 Primary Booms	6-1
	6.1.2 Damper Boom	6-1
	6.1.3 TV Camera	6-1
	6.1.4 Power Control Unit	6-1
	6.1.5 Solar Aspect Sensor	6-1
	6.1.6 Combination Passive Damper	6-1
	6.2 Qualification Testing	6-2
	6.2.1 Parts Qualification	6-2
	6.2.2 Component Qualification	6-4
	6.2.3 System Qualification	6-6
	6.3 Flight Acceptance and AGE	6-6
	6.3.1 Status	6-6
	6.3.2 Hi-Pot Testing Procedure	6-6

TABLE OF CONTENTS (CONT'D)

Section		Page
7	QUALITY CONTROL	7-1
	7.1 Boom System	7-1
	7.2 Combination Passive Damper	7-1
	7.3 Television Camera System	7-3
	7.4 Solar Aspect Sensor	7-4
	7.5 Power Control Unit	7-5
	7.6 Systems Test	7-5
	7.7 Parts Qualification	7-5
	7.8 General	7-6
8	MATERIALS AND PROCESSES	8-1
	8.1 Primary Booms	8-1
	8.2 Combination Passive Damper	8-2
	8.3 TV Camera	8-2
9	MANUFACTURING	9-1
10	RELIABILITY PARTS AND STANDARDS	10-1
	10.1 ATS Gravity Gradient Orbit Test Sequence Method	10-1
	10.2 Analysis of Specified Sequence	10-1
	10.2.1 Importance Ranking	10-1
	10.2.2 Risk Determination	10-2
	10.2.3 Effectiveness Measure	10-3
	10.3 Analysis of an Alternate Sequence	10-5
	10.3.1 Factors to be Considered in Developing an Alternate Sequence	10-5
	10.3.2 Candidate Sequence	10-6
	10.3.3 Effectiveness Determination for Alternate Sequence	10-7
	10.4 Conclusions and Recommendations	10-7
	10.5 Parts and Standards	10-9
	10.5.1 Parts Procurement	10-9
	10.5.2 Parts Drawings and Parts Lists	10-9
	10.5.3 Parts Qualification Program	10-9
	10.5.4 Degradation Analysis	10-9
	10.5.5 Failure Analysis	10-9
11	NEW TECHNOLOGIES	11-1
12	GLOSSARY	12-1

LIST OF ILLUSTRATIONS

Figure		Page
2-1	Yaw Bias versus Zeta, Hysteresis Damping	2-8
2-2	Yaw Bias versus Zeta, Eddy-Current Damping	2-8
2-3	Yaw Bias versus Zeta, Eddy-Current Damping	2-11
2-4	Yaw Bias versus Zeta, Hysteresis Damping	2-11
3-1	Primary Boom "A" Squib Firing Circuit	3-6
3-2	GE/HAC Squib Circuit Interface	3-8
4-1	Deep Indentation at Edge of V-Groove	4-7
4-2	Indentations in Wall of V-Groove	4-8
5-1	SAS Detector and Test Fixture	5-5
5-2	Sensed Angle Geometry	5-6
5-3	Plot of Theoretical Value versus Actual Readout	5-7
5-4	Power Control Unit Schematic	5-9
5-5	First PCU Flight Unit During In-Process Testing	5-15

ABSTRACT

Inversion studies of the ATS-D vehicle using the technique of rod retraction/extension were completed during the reporting period; these results are presented in Section 2.2. This study is a companion to the results of ATS-A inversion by means of rod retraction/extension that was published in the Seventh Quarterly Report. The effect of scissor angle on performance of the ATS-A and ATS-D is given in Section 2.3.

Primary boom tip mass uncaging during vibration and mode switching continued to present difficulties. Several methods were investigated for retaining the tip masses; these included launch in standby mode, negative spring, and a concept suggested by deHavilland using a ratchet to retain the gear train. None of these methods were satisfactory and it was concluded that the reliability of the primary boom functions was compromised by incorporating an alternate while attempting to preserve the requirement of mode switching. NASA directed the use of a pyrotechnically actuated primary boom release system which was implemented by a gear holder to provide positive caging during launch environment, and uncaging by means of squibs. The switching function is to be eliminated so there will be no opportunity in the flight units for the erection motor or the scissor motor to perform opposite functions.

Boom element cracking, which had been a problem, was eliminated by redesign as reported in the last quarterly report. The retrofits which were implemented during the last quarter have proven to be successful as evidenced by the results of many vibration tests which were conducted in connection with the investigations into the tip mass uncaging difficulty.

The status of tests which were performed on units of the CPD is summarized in Section 4. Design and development efforts related to the CPD were directed toward resolution of problems that occurred during the reporting period. Failure analyses were completed for the angle indicator lamp anomaly, and for the clutch solenoid, both of which experienced random failures during prototype testing.

Significant design changes made to the TV camera included: (1) increased sun shutter sensitivity to protect the vidicon from sun damage, (2) elimination of sluggish shutter opening, (3) solution of the problem of shutter opening during launch environment (vibration), (4) changed all tin or cadmium finishes. Testing during the period confirmed the validity of these and other changes described in Section 5.1.

In conjunction with the compound angle tests conducted on the Solar Aspect Sensor, an additional test was performed to increase the confidence level in the register output. These tests are described in Section 5.2.

The latest revision of the Power Control Unit schematic is reproduced in Section 5.3. The status of tests which were conducted on the engineering units, prototype units, and assembly of the flight units is summarized in Section 5.3.

Acceptance tests of the system prototype units were completed by GE during the period, and the units were shipped to HAC on 11 May 1966. Component qualification tests were begun at GE on the second set of prototype equipment. A summary of these test results to date is given in Table 6-3.

Quality Control surveillance was provided for fabrication of ATS hardware at GE and at subcontractor facilities. These activities are described in Section 7.

A method is presented in Section 10.1 for the development of an orbit test sequence which is based on the Orbit Test Philosophy generated by GE for the ATS Gravity Gradient experiment. The status of Parts and Standards activities is given in Section 10.5.

SECTION 1
INTRODUCTION

1.1 PURPOSE

This report documents the technical progress made during the period from 1 April to 30 June 1966 toward the design and development of Gravity Gradient Stabilization Systems for the Applications Technology Satellites.

1.2 PROGRAM CONTRACT SCOPE

Under Contract NAS 5-9042, the Spacecraft Department of the General Electric Company has been contracted to provide Gravity Gradient Stabilization Systems for three Applications Technology Satellites: one to be orbited at 6000 nautical miles (ATS-A), and two to be orbited at synchronous altitude (ATS-D and ATS-E). Each system will consist of primary booms, damper boom, damper, attitude sensors and the power conditioning unit. In addition to the flight systems, GE will provide a thermal model, a dynamic model, an engineering unit and two prototype units. GE will also supply two sets of aerospace ground equipment.

SECTION 2

SYSTEMS ANALYSIS AND INTEGRATION

2.1 EVENT SUMMARY

Events of significance to systems analysis and integration activities during the three months from April through June of 1966 are summarized as follows:

31 March	GE inputs to interface specification S2-0401-1 (based on a review of the second revision received 10 January and an interface meeting at GSFC on 21 February) were transmitted to NASA/GSFC.
31 March	"ATS-A Data Reduction and Computer Programs Specification," PIR 4A26-037, was issued as a working document for the initiation of programming activities associated with the ATS Data Reduction Module (DRM).
13 April	The final ATS-A Error Budget was published as PIR 4174-055. Worst case error estimates (steady-state operation) are 4.9 degrees in pitch, 2.6 degrees in roll, and 7.8 degrees in yaw.
13 April	"IR Earth Sensor Data Reduction," PIR 4730-218, was issued as a basis for data analysis and programming activities on the Attitude Determination Program.
15 April	Working session on GE/NASA data system interfaces; final agreement on the Data Formats Specification, SVS-7429, was achieved; GE's proposed use of the Desk Side Computer Service (DSCS) for quick-look data reduction was discussed.
22 April	The rod retraction and re-extension pitch inversion study for ATS-D was completed and issued as PIR 4174-056; the ATS-A study was issued 31 March as PIR 4174-053. The nominal time for the ATS-D maneuver is 6.5 hours compared to 1.6 hours on ATS-A.
3 May	The engineering analysis associated with ADIP III (Attitude Determination Investigation Program III) was issued as PIR 4424-076.
4 May	GE inputs to NASA on continuous display requirements for GE telemetry data.
6 May	Informal presentation to NASA/GSFC, at GE, on mechanics of the Attitude Determination Program. Alternative approaches to the resolution of ambiguities in the GFE earth sensor data were discussed. It was subsequently decided to utilize the RMS computation to select the "best fit" attitude solution; this approach is the most expedient of the alternatives discussed but is estimated to increase operational running time on the computer by about 15 percent.

9 May	Thermal bending tests at NASA/GSFC were initiated. Limitations of the facility prevented simultaneous measurement of temperatures and deflections. Temperature measurements, using GE-instrumented rods, were completed during the succeeding week; after accounting for uncertainties in knowledge of surface optical properties and recognition of source fluctuations as the cause of observed transients, the test results were found to be in excellent agreement with analytical predictions. Deflection measurements on uninstrumented rods, also supplied by GE, were postponed to a later date.
13 May	The Flight Malfunction Analysis/Corrective Action Plan for ATS-A was issued as PIR 4E10-25 and supersedes the preliminary version issued as PIR 4E10-12 and 28 February.
16 May	Results of studies to determine the effect of "scissor" angle on steady-state performance were compiled and issued as PIR 4174-063.
20 May	The orbit position error study was completed and issued as PIR 4424-077. Position errors of less than 100,000 feet were found to introduce errors of less than 0.06 degree in pitch and roll, and less than 0.25 degree in yaw.
23 May	Received third revision of interface specification S2-0401-1 for review and comment.
25 May	Received initial distribution of "Gravity Gradient Rod Stiffness Matrix" from the Franklin Institute Research Laboratories.
9 June	The programmer's writeup on ADIP III was issued as PIR 4A26-061.
15 June	Decision to remove CPD "soft stop."
15 June	"Attitude Equations for the Applications Technology Satellite" (the Math Model engineering analysis) was published.
16 June	GE received corrected inputs on earth constants, from GSFC, for use in GE's Attitude Determination Program and ATS Math Model.
21 June	First working session on the orbital operations plan was held at NASA/GSFC.
23 June	The final ATS-D Error Budget was published as PIR 41M1-147. Worst case error estimates (assuming 30 day on/60 day off station-keeping duty cycle) are 5.4 degrees in pitch, 4.8 degrees in roll, and 19 degrees in yaw.
28 June	NASA program review at GE. Direction received to eliminate Faraday rotation corrections to POLANG data in GE's Attitude Determination Program. Data received from NASA will be pre-corrected for antenna errors as well as Faraday rotation effects. This permits the removal of the magnetic field routine from the ADP.
30 June	GE inputs to the third revision of interface specification S2-0401-1 were transmitted to NASA.

2.2 ATS-D INVERSION USING ROD RETRACTION AND EXTENSION

2.2.1 DISCUSSION

A study was performed to determine a specific inversion maneuver for ATS-D employing rod retraction and extension. This work closely parallels the ATS-A inversion study described in Section 2.4.1 of the Seventh Quarterly Progress Report. The maneuver was designed to (1) minimize vehicle oscillations, and (2) be performed on a time basis only in the event pitch attitude data is not available.

Several pertinent vehicle parameters used in this study are listed below.

a. Nominal Rod Length = 123.31 feet
b. X-Boom Half Angle = 24.94 degrees
c. Rod Extension and Retraction Rate = 1 ft/sec

The computer program developed to make this study does not include the effects of solar pressure torques or thermal bending of the rods. Their effect on the maneuver is assumed to be insignificant. Moreover, their inclusion would have substantially increased both programming time and computer running time.

Rescan p. 2-4

Three sets of initial conditions were use are listed below. The nominal set consists of an undisturbed vehicle rotating at orbital rate about its pitch axis. The other two sets are taken from a GAPS IV run after the vehicle reached steady state conditions. This run included the following effects: sun in the orbit plane, 1000 pole-cm magnetic dipole moment along the roll axis, CP-CM displacement of one inch along both the yaw and pitch axes. The sets labeled "ω_z min" and "ω_z max" are those for which ω_z reached its minimum and maximum values respectively.

INITIAL CONDITIONS

	Nominal	ω_x min	ω_x max
θ_p (deg)	0	-0.2	-0.1
θ_r (deg)	0	-0.4	-0.3
θ_y (deg)	0	2.8	2.8
γ (deg)	0	4.8	2.0
ω_x (deg/sec)	0	1.662×10^{-4}	-1.278×10^{-4}
ω_y (deg/sec)	0	7.440×10^{-5}	3.724×10^{-4}
ω_z (deg/sec)	0.004178	4.038×10^{-3}	4.307×10^{-3}
$\dot{\gamma}$ (deg/sec)	0	1.290×10^{-4}	-2.566×10^{-4}

The first task in this study is to determine to what length the rod should be retracted. Under nominal initial conditions the maximum value of retracted rod length for which inversion occurs is 80 feet. For this case, the vehicle inertial rate is increased to 2.4 times orbital rate. In the most severe case, using the ω_z min initial conditions, the maximum value of retracted rod length for which inversion occurs is also 80 feet.

There is some uncertainty as to how accurately the rods can be retracted to a specified length when the vehicle is in orbit. The specified accuracy of the rod extension readout sensor is $\pm$ 3 inches. However, there are other factors that can markedly reduce this accuracy. These include variations in the manner in which the rod tape is stored on the drum, power supply variations and telemetry errors. The latest estimate on rod length sensor accuracy is $\pm$ 2 feet. These measurements are received at 3-second intervals.

To accommodate these errors and to decrease the time required to complete the inversion, a nominal value of 70 feet was chosen for the retracted rod length.

One rod in each rod pair can be as much as two feet short at its nominal length. However, the mechanics of rod retraction provide that the nominal length rod is retracted to the specified length. The short rod is also short in the retracted position. Therefore, the effect of short rods is to reduce the vehicle moment of inertia in both the extended and retracted positions. The ratio of these moments of inertia, for the case of one rod in each rod pair two feet short, is almost identical to the moment of inertia ratio where all the rods are the nominal length. Therefore, the increase in orbital rate is almost identical. The net result is that short rods have no significant effect on the inversion maneuver. This conclusion has been verified by computer runs for ATS-A. It was not thought necessary to repeat these runs for ATS-D.

It is desirable to be able to accomplish the inversion maneuver without being completely dependent upon vehicle pitch attitude information. Two computer runs were made for inversion maneuvers in which rod extension is commanded at 390.68 minutes after reaching the retracted rod length. Retracted rod lengths of 65 and 75 feet were used which represent errors of $\pm$ 5 feet. Initial conditions were chosen to provide the worst case. The "ω_x max" initial conditions were used for retracted rod lengths below nominal and "ω_z min" initial conditions were used for retracted rod lengths above nominal. Both inversion maneuvers were successful. However, as expected, large vehicle pitch oscillations occurred. Maximum amplitude was 64 degrees.

It should be noted that rod retraction and extension results in large damper cocking torques. The maximum value observed during this study was 16,070 dyne-cm. This torque will cause the eddy current damper to bottom, resulting in loss of damping for the duration of rod extension or retraction. This loss of damping has no significant effect on the maneuver because it occurs for a very short period, approximately 50 seconds. However, the damper must be able to withstand this large torque without being damaged.

The maximum value of damper cocking torque observed in the ATS-A inversion study was 48,320 dyne-cm.

2.2.2 CONCLUSIONS

The ATS-D vehicle can be inverted by retracting and then extending the gravity gradient rods. The recommended maneuver consists of: (1) retracting all four gravity gradient rods simultaneously to 70 feet, (2) monitoring the vehicle pitch attitude, and (3) extending the rods to their original length of 123.3 feet when the vehicle pitch attitude reaches 180 degrees.

The maneuver can be performed on the basis of time if the retracted rod length can be held within a tolerance of $\pm$ 5 feet. This maneuver consists of: (1) retracting the rods to 70 feet, (2) waiting 390.68 minutes, and (3) extending the rods to their original length.

The preferred method is to use pitch attitude rather than time to determine when to extend the rods. The latter technique will probably result in large pitch oscillations.

The nominal time required to complete the inversion maneuver is 6.5 hours.

Large damper cocking torques occur during retraction and extension. The maximum observed value was 16,070 dyne-cm.

The choice of eddy current or hysteresis damper has no significant effect on the maneuver, provided they can both withstand the cocking torques.

2.3 EFFECT OF "SCISSOR" ANGLE ON PERFORMANCE OF ATS

As a portion of the ATS gravity-gradient orbit test plan, the main rod half-angle ("scissor" angle) will be varied over a range from 11 degrees to 31 degrees. The primary objective of this test is to establish the degree of system performance sensitivity to spacecraft moment-of-inertia ratios. The scissoring capability will also provide the opportunity for a vernier adjustment of yaw bias. To investigate the range of performance variations which may be encountered during these tests, a systems study was performed using the GAPS IV computer program.

For purposes of comparison, the computer run results are grouped by three variables: (1) by the type of damper mechanism used, eddy current or hysteresis; (2) by sun vector to orbit plane angle; and (3) by the main rod half-angle, ζ. From these groupings, it is seen that the design objective of achieving maximum damping of the least damped mode was successfully accomplished. That is to say, the amplitude of oscillation about the yaw axis, for the eddy current damper design is minimum at zeta equals approximately 25 degrees.

Damping optimization about other axes, or using hysteresis damping, occurs at different vehicle and orbital configurations. A single "best" point does not exist for all axes.

2.3.1 ATS-A RESULTS

For ATS-A, the pitch axis shows an increase in oscillation amplitude with increase in zeta. The exception is at zeta equals 25°, hysteresis damping, sun out of plane. A very sharp drop in value was noted here. Roll axis oscillations are lowest in the 15° to 25° range for zeta. Through this range no special comment can be made. The point, or points, of minimum amplitude depends on sun relationship and type of damping. Oscillations about the yaw axis are generally lowest at the 19° point. Here again, an exception occurred for eddy current damping, sun out of plane, zeta equals 25°.

Figure 2-1 shows the effects of both the rod half-angle (zeta) and the angle between the sun vector and the orbit plane (nu) on the vehicle yaw bias angle (theta) when hysteresis damping is used. Figure 2-2 shows the same effects for a vehicle using an eddy current damper. Both figures show major changes in the bias angle with respect to the changes of rod angle

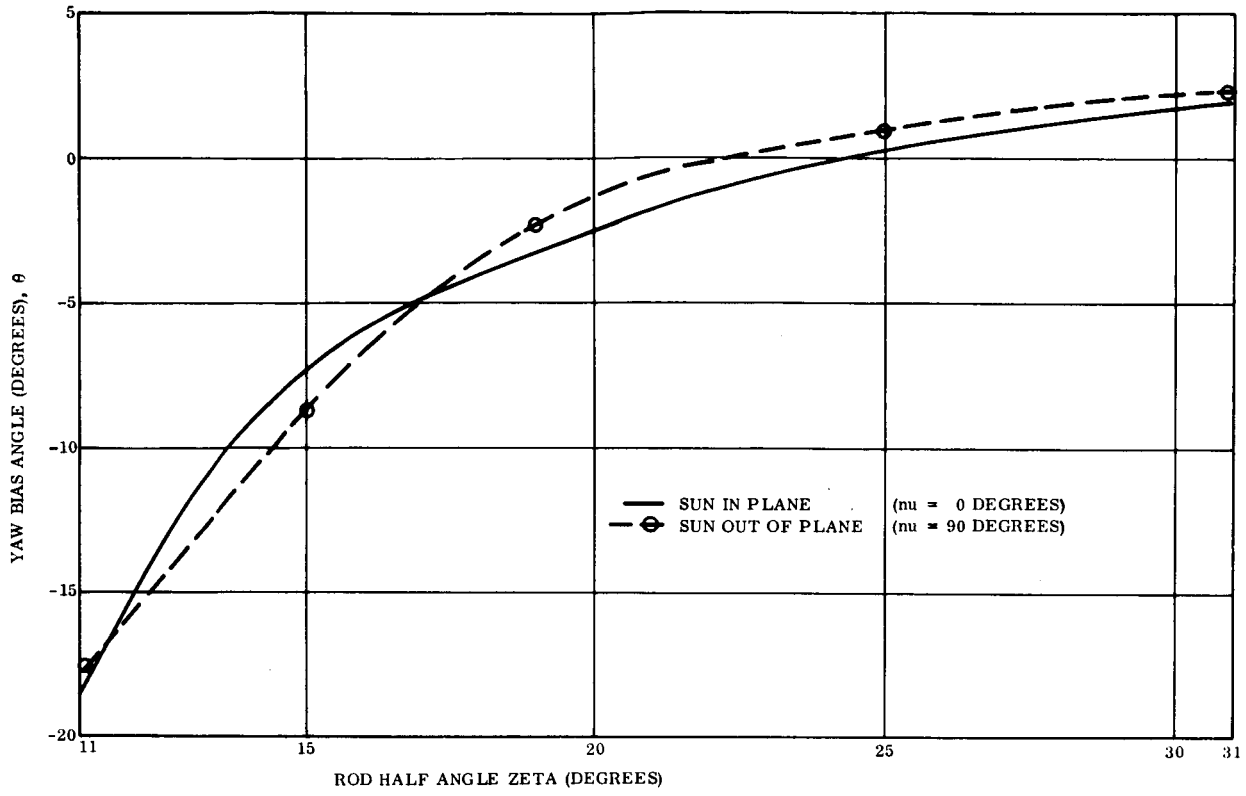

Figure 2-1. Yaw Bias versus Zeta, Hysteresis Damping (Combined Errors)

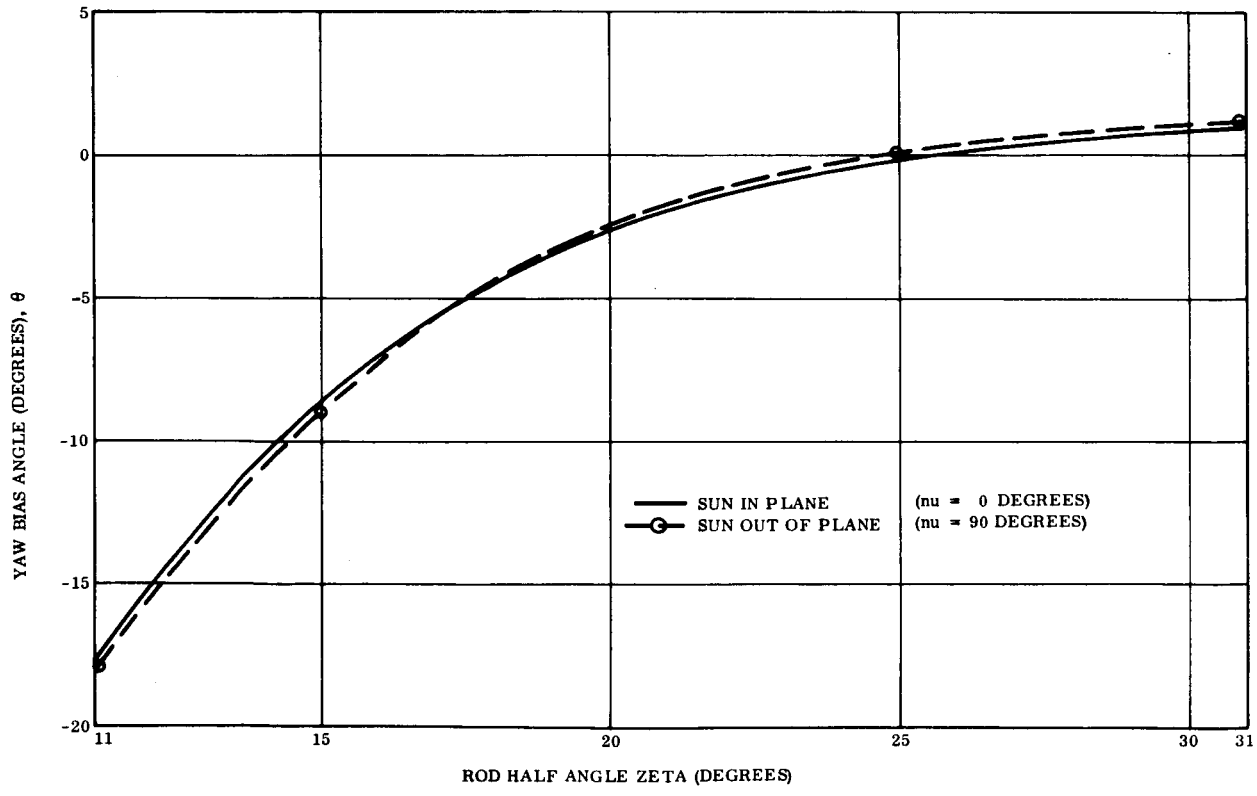

Figure 2-2. Yaw Bias versus Zeta, Eddy Current Damping (Combined Errors)

zeta. Relatively minor changes show with respect to the sun angle (nu). The other errors, such as orbit eccentricity and magnetic dipole, were unchanged among all sets of runs. As the sums of errors, such as rod thermal bending and solar torques, add instantaneously there is no reason to expect the yaw bias angle to be exactly zero at the rod design half-angle. It should be noted that of the four curves presented only one passes through zero.

As a means of illustrating the relative damping of the two types of dampers, the times for the eddy current damper envelope to decay to the final values for the hysteresis damper are given in Tables 2-1 and 2-2. The bias and amplitude values are listed for convenience of comparison.

Table 2-1. Sun in Orbit Plane

Zeta (Deg)	Amplitude (Deg)	Hysteresis		Eddy	
		Time (Hr)	Bias (Deg)	Time (Hr)	Bias (Deg)
11	9.3	150	-18.6	98	-19.8
15	8.1	150	- 7.3	90	- 6.3
19	9.0	150	- 3.2	78	- 3.0
25	15.8	150	0.3	49	0.2
31	3.0	150	1.9	#	3.0

- Did not damp to this level.

Table 2-2. Sun Out of Orbit Plane

Zeta (Deg)	Amplitude (Deg)	Hysteresis		Eddy	
		Time (Hr)	Bias (Deg)	Time (Hr)	Bias (Deg)
11	11.8	150	-17.9	78	-18
15	8.7	150	171.3	52	- 6
19	6.8	150	177.8	88	- 3
25	15.9	150	0.9	43	1
31	6.2	150	2.3	136	2

As the rod half angle is increased from 11° toward 25° the eddy current damper shows a corresponding improvement in damping times. Between 25° and 31°, a sharp worsening occurs such that for "Sun in Plane," the hysteresis damper is the better. The sharp increase which occurs for "Sun Out of Plane" shows the approaching of an equal time point. Probably, if the rod angle were opened to 35°, the hysteresis damper would be the more effective.

2.3.2 ATS-D RESULTS

For the hysteresis damper design, better yaw axis damping is seen for zeta equals 31° than for any other value of zeta. Also, for zeta equals 19°, sun in plane, hysteresis, the vehicle yaw axis did not damp within the 400 hours encompassed by the run. Pitch damping, hysteresis damper, was best at zeta equals 19° for sun in plane and was equally good at 15° and 31° for sun out of plane. The relatively best points for the roll axis were zeta equals 19° for sun in plane, and zeta equals 25° for sun out of plane.

Eddy current damping, on the other hand, showed best pitch, axis damping at zeta equal to 19° regardless of sun position. It should be noted, however, that pitch damping level is nearly constant from 11° to 25°. Roll axis damping was best at zeta = 25° for sun in plane, and was best at 19° for sun out of plane.

The rod half-angle chosen as the design value is shown to be the center value of the band of best operation.

Figure 2-3 shows the effects of both the rod half-angle (zeta) and the sun vector to orbit plane angle (nu) on the vehicle yaw bias angle (theta) when eddy current damping is used. Figure 2-4 shows the same relationships for a vehicle using a hysteresis damper. Both figures show major changes in the bias angle with respect to the changes in the rod half-angle zeta. The sun vector to orbit plane angle (nu) causes relatively minor altitude errors. As the sums of the various errors such as thermal bending and solar torques are instantaneous values, there is no reason to expect the yaw bias angle to pass exactly through zero at the rod design half-angle. Orbit considerations have a major effect on this angle. Not one of the four curves plotted showed a zero crossing at the required design half angle.

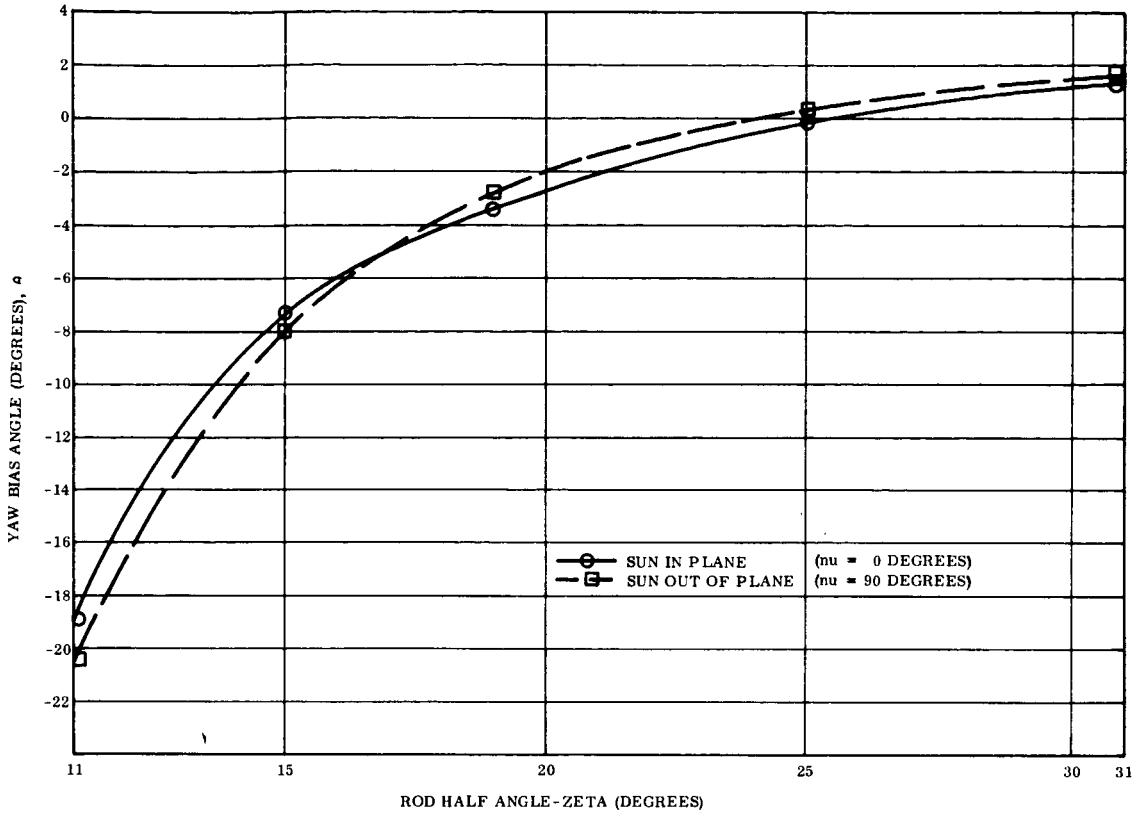

Figure 2-3. Yaw Bias versus Zeta, Eddy-Current Damping (Combined Errors)

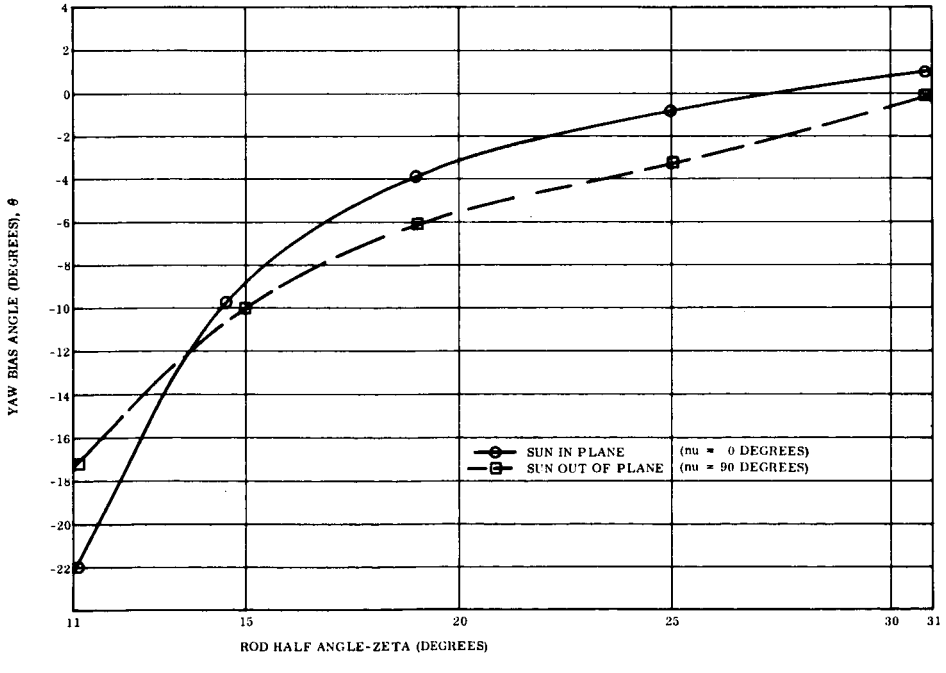

Figure 2-4. Yaw Bias versus Zeta, Hysteresis Damping (Combined Errors)

Plots for pitch and roll were not made as the data were not smooth and the error angles were very small.

As a means of illustrating the relative yaw axis damping of the types of dampers, the time required by the envelopes of the eddy current damper to decay to the final values (at 400 hours) of the hysteresis damper are given in Tables 2-3 and 2-4. The bias and amplitude values are listed for convenience of comparison.

Table 2-3. Sun in the Orbit Plane

Zeta (Deg)	Amplitude (Deg)	Hysteresis		Eddy	
		Time (Hr)	Bias (Deg)	Time (Hr)	Bias (Deg)
11	42.0	400	-22.2	218	-24
15	35.0	400	- 8.8	169	- 6
19	#	400	+	+	+
25	18.0	400	8.2	165	- 3
31	9.1	400	1.0	208	+ 4

Did not damp within 400 hours.
+ No comparison was drawn.

Table 2-4. Sun Out of Orbit Plane

Zeta (Deg)	Amplitude (Deg)	Hysteresis		Eddy	
		Time (Hr)	Bias (Deg)	Time (Hr)	Bias (Deg)
11	19.1	400	-17.3	193	21
15	29.3	400	- 8.5	241	-6
19	21.5	400	- 6.8	291	-4
25	26.2	400	- 3.2	174	+2
31	23.6	400	- 0.16	135	+5

All angles in these tables were expressed as angles less than 90° even though many of the runs showed backward stabilization.

2.3.3 CONCLUSIONS

The graphs indicate that for values below the rod design half-angle, the eddy current damper is the more efficient. Near the design value the two dampers become more nearly equal in damping efficiency. Above the design value the hysteresis damper seems to be the more efficient. Thus, the dependency of the type of damping on system parameters is demonstrated. System parameters are dictated by mission requirements.

Most of the tabulations and graphs show that the range of 19° to 25° for rod half-angle, offers the best combinations of residual biases and oscillations. It was in this range, using the eddy current damper, that the damping times were minimized. Detailed results of all runs are presented in PIR's 4174-063 and 41M1-191.

SECTION 3

BOOM SUBSYSTEMS

3.1 KEY EVENTS

7 April 1966	Prototype No. 2-a Primary Boom received from deHavilland
11 May 1966	Prototype No. 2-a Primary Boom delivered to HAC for preliminary electrical checkout
31 May 1966	Prototype No. 2-b Primary Boom received from deHavilland
6 June 1966	Start of Qualification Test Cycle on Prototype No. 1 Damper Boom
7 June 1966	Prototype No. 2-b Primary Boom delivery to HAC for engineer vibration test on dynamic spacecraft
14 June 1966	T1-b Primary Boom received from deHavilland after rework for stripped gears, etc.
23 June 1966	Delivery of Damper Boom actuator assemblies for start of confidence program
7 July 1966	Flight No. 1 Damper Boom actuator assemblies for start of confidence program
8 July 1966	Decision to add pyro tip mass release and lock clutches in Primary Boom
1 August 1966	Final delivery of Prototype No. 2-b to HAC
8 August 1966	Final delivery of Prototype No. 2-a to HAC

3.2 PRIMARY BOOMS

3.2.1 TIP MASS UNCAGING

Tip mass uncaging resulted from stacking the element on the drum during vibration. Essentially the element became more tightly wound on the drum and this tightening resulted in

enough movement of the end cap so that the caging springs were disengaged from the locking grooves within the tip weights, thus releasing the tip masses. The basic problem is that tip weight uncaging is directly dependent upon boom element movement. One modification included a flexible latching cable which ensured that tip weight uncaging would be independent of element movement due to stacking. The flexible cable was inserted into the unit through the end of the tip weight and guided to a special worm gear attached to the internal polycarbofil drum drive gear. Engagement was accomplished by screwing the cable into engagement with the special gear and locking in place. Disengagement will occur only with rotation of the drum drive gear.

Other methods, which included launch in standby mode and a negative spring concept, were evaluated. These methods attempted to solve the uncaging difficulty while preserving the clutching function which provides a backup in the event of a drive motor failure. However, the approach that seems to have solved the problem involves retention of the gear train during launch vibration but it excludes emergency mode operations.

3.2.1.1 Launch in Standby Mode

One of the techniques employed to prevent extension drive train rotation was to clutch from the extension drive train to the scissor motor (standby mode). The 3000 to 1 gear ratio of the scissor motor gear head would thus act as a motor brake and retain the extension drive train during launch environment. This configuration was implemented on the T1-b Engineering Unit, and this caging scheme was pursued through extensive engineering evaluation beginning in April. The T1-b was subjected to vibration testing in a standby mode in an attempt to prove that the tip masses would remain caged with the scissor motor holding the extension motor drive train. The tip masses did uncage, however, due to clutch slippage. The T1-b was also vibrated in normal mode and the same slippage was observed. The T1-b was returned to deHavilland for their investigation of clutch slippage. The unit had been subjected to some damage which caused rounding of the clutch teeth; in addition, one of the gears in the extension drive train was stripped. T1-b was then abandoned as a test bed for evaluation of this caging scheme, and Prototype P2-b was used in succeeding tests.

The P2-b was vibrated in the standby mode at GE, but it failed to remain caged. Further testing was stopped because NASA required the P2-b at HAC for vibration testing on the dynamic vehicle. The component was rigged to artificially constrain the tip masses against unlatching during vibration, and it was sent to HAC on 7 June.

3.2.1.2 DeHavilland Caging Scheme

A method for caging the primary booms which utilizes a detent in a manner similar to a ratchet to hold the extension gear train during vibration was suggested by deHavilland. The deployment sequence would require the booms to be retracted for about one-half inch to release the detent before the booms could be deployed. DeHavilland chose to use the T1-b Engineering Unit as a test bed for evaluation of their design.

3.2.1.3 Negative Spring

The spring that normally pushes the tip plugs toward the decaged position was reversed so its force would be exercised in the caged position. The negative spring thus assisted in retaining the tip masses while in the caged position; the force was transmitted through the boom element to the tip plugs. However, the force exerted by each spring would have to be overcome by the extension motor upon deployment in orbit. The first series of tests of the negative spring caging approach resulted in failure because of slippage of the caging cable with respect to the drum drive gear. The depth of engagement was too small to be tolerant of movement between the mating worm gear and the erection unit gear. These gears were redesigned to provide approximately twice the depth of engagement. Tests were performed using a 7/10 of a pound per inch spring at zero pre-load which resulted in successful endurance of qual vibration levels and successful deployment upon command. Because of the extremely small margin between uncaging force deliverable after vibration and caging force required during vibration, the lighter spring was replaced by a 1-1/2 pound spring at zero pre-load. This modification also incorporated a teleflex cable to increase the compressive force delivered from the drum drive gear to the tip plug over that provided by the boom tape. The teleflex cable replaced the former latching cable which proved to be incapable of transmitting sufficient compressive force to the tip plug. Although tests proved this method to be feasible, both NASA and GE felt that the available uncaging force was too small to be

used as a reliable method for uncaging. Therefore, NASA directed the implementation of a positive caging method that would utilize pyrotechnic devices to uncage the tip masses. Several preliminary schemes were advanced, two of which are summarized in Section 5.3, but the specific method approved by NASA was the pyrotechnic gear holder.

3.2.1.4 Gear Holder Caging

The gear holder caging method prevents the extension drive train immediately external to the erection unit from rotating during launch vibration environment. In addition, since the clutch is pinned in the normal mode, Commands F-21 through F-24 (which had formerly been designated for interchanging rod and scissor motors A and B, and returning them to normal mode) are now available for firing the squibs on the gear holder to initiate primary boom deployment. The pyrotechnics involved are identical to the linear actuator design used for initiation of damper boom deployment. (See page 3-1 of the Sixth Quarterly Report for a description of the linear actuator.) As used in the primary boom uncaging sequence, the linear actuator will thrust against a lever assembly which will rotate the locking teeth out of mesh with the teeth on a gear in the extension drive train. Since the clutching function has been abandoned, no additional squib driver circuits need be provided. In the course of analyzing this caging method, two other methods were considered either of which could have preserved all existing functions. However, because of the difficulties experienced in mechanizing the clutch, NASA directed the use of the former clutch commands to fire the uncaging squibs and further investigation of the clutch difficulties became non sequetor. The squib circuitry has some range safety ramifications for the reasons that:

a. The squib fire commands are transmitted through a connector that also carries other power and signal leads.

b. The clutch solenoid driver circuits in the PCU are not standard squib driver circuits, and attendant protective drives are not available.

A waiver to operate the uncaging squibs in this manner is indicated. NASA has expressed confidence that one will be forthcoming since the payload power switch through which all boom system power is directed will be in the open position when the vehicle is in the launch mode, and the system is thus protected from spurious signals.

The gear holder design has been successfully tested at GE. Engineering and prototype units were modified to incorporate the caging method with the results as presented in Table 3-1.

Table 3-1. Gear Holder Evaluation

Primary Boom Unit	Vibration Test	Post-Vibration Results
T1-b	Qualification Level	Unit modified with breadboard model of gear holder design. Successfully deployed*
P2-a	Qualification Level	Successfully deployed
P2-b	Acceptance Level	Successfully deployed

*Successful deployment is considered to be boom extension to a distance of 1 foot.

The electrical circuit used to fire the thrusting pyrotechnic is reviewed in the following paragraphs.

The circuits in the PCU which were formerly designated "Rod Assembly Normal Mode" and "Rod Assembly Standby Mode Clutch Solenoid Drivers" will be designated Primary Boom Squib Drivers and used to apply firing power to the squibs in the caging assembly. These circuits are available because of the decision to pin the clutches and not use the solenoid drivers.

The squib firing circuit for primary boom "A" is depicted schematically in Figure 3-1. A duplicate circuit will fire the squibs for primary boom "B." As shown in Figure 3-1, each boom has redundant squibs and squib drivers. Squib No. 1 will be fired upon ground command by a current pulse of 100 millisecond duration from squib driver No. 1. A second ground command will cause squib driver No. 2 to apply power to squib No. 2 for 100 milliseconds. The ratings of the components in the circuit are:

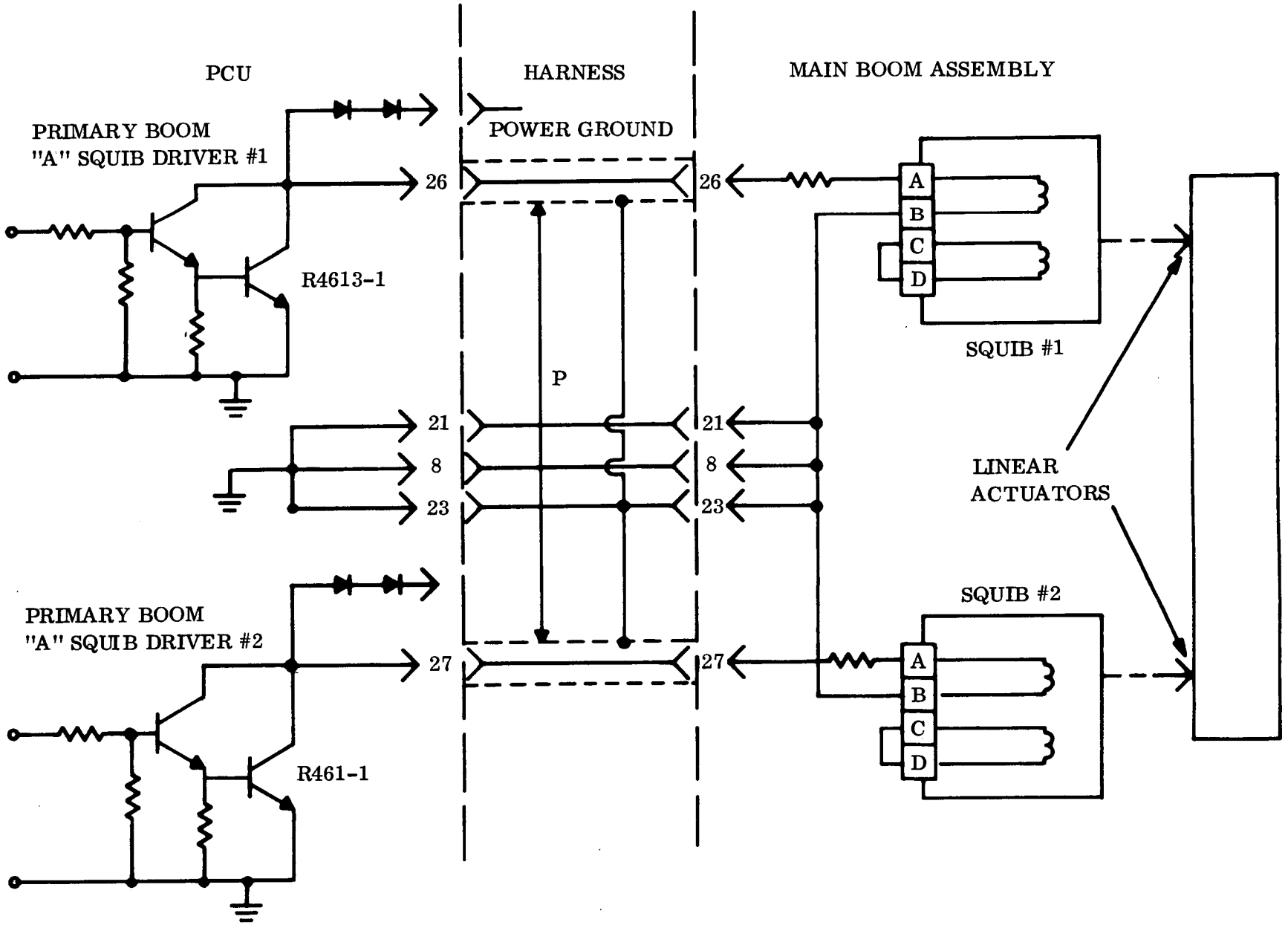

Figure 3-1. Primary Boom"A"Squib Firing Circuit

Output Transistor of Squib Driver (Type R4613-1)

Parameter	Condition	Rating
H_{FE}	$V_{CE} = 3.5$ V $I_C = 5$A (pulsed)	20 min
$V_{CE_{SAT}}$	$I_C = 5$A $I_B = 0.5$A	1.5 vdc max
V_{CEO}	Open Base Conn.	80 vdc min

Squib (Dwg. No. 895D724)

Bridge Wire Resistance	(1.0 ± 0.1)
No Fire Current	1A @ 1W for 5 minutes
All Fire Current	3.2A for 20 milliseconds
Spec. Firing Current	5A for 20 milliseconds (3 δ limit from Bruceton tests)

(Reliability Engineering has calculated 0.9999+ reliability of fire with 4 amperes for 20 milliseconds.)

Current Limiting Resistor

Type: R4538 (2W)
R4539 (5W)

4.3 ohms $\pm$ 1%

Voltage Source: 24.5 to 32.5 vdc

The resistor manufacturer verified the capability of these resistors to withstand 125 watt current-pulses of 100 millisecond duration at 2 second intervals without damage.

The equivalent circuit for squib firing is shown in Figure 3-2. The bus voltage range is that designated in the HAC-ATS System Summary Report dated 1 October 1965. The 0.5-ohm resistance represents the estimated (vehicle + PCU) wiring resistance. The exact value of this resistance could be $\pm$ 50 percent of the value selected, but in the following discussion the possible variations will be ignored.

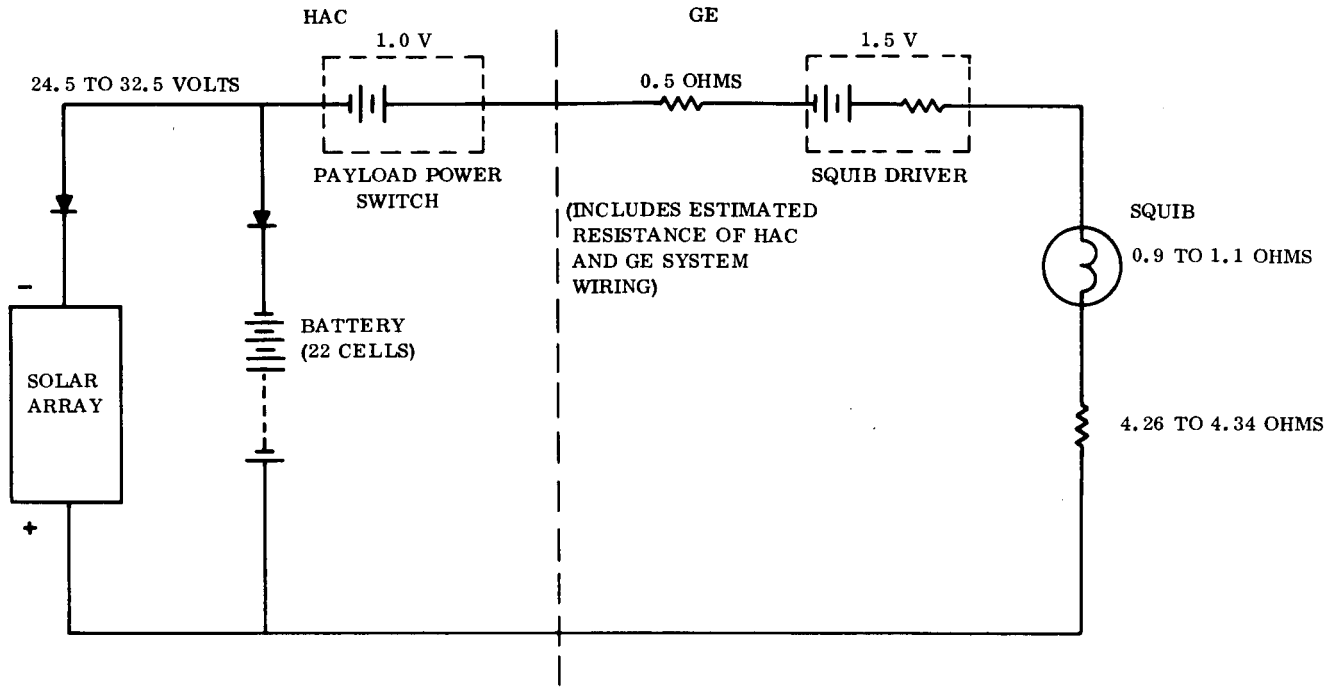

Figure 3-2. GE/HAC Squib Circuit Interface

The Payload Power Switch and Squib Driver output transistor voltage drops are represented as sources opposing the vehicle supply voltage.

Under the conditions outlined, the worst case current for the transistor (high bus voltage and resistor and squib bridge wire resistances on the low side) can be as high as 5.3 amperes. If the harness resistance is not 0.5 ohm as estimated, the current range can be even greater.

If the worst case conditions do not exist and all resistances are the nominal values, the bus voltage range of 24.5 v to 32.5 v is still great enough to cause either the squib or transistor currents to be out of spec at voltage extremes ($\frac{\sigma I}{\sigma V} \cong 3\%/\text{volt}$).

NASA stated that the voltage at the HAC/GE interface has a "high probability of being between 28 and 31 volts at the time of separation but may be as low as 22 volts." Under these conditions, maximum current would be 5.2 amperes, and the current could be as low as 3.46 amperes.

The manufacturer of the R4613 transistor has stated that the transistor should not be subjected to dc current stress in excess of 5 amperes under any conditions, and that the effect of current pulses in excess of 5 amperes is unknown.

The facts stated in the preceding analysis identify a marginal design. The focal point of the marginal design is the maximum current capability of the squib driver output transistor.

The Squib Driver output transistor should be changed to the 20 ampere type used in the motor driver, and the biasing circuit for this transistor set to provide sufficient base drive for a collector current of 7.5 amperes. The current limiting resistor used with this transistor should be 3.01 ohms and should be the same type used in the damper boom uncage squib firing circuit.

The following action items were recommended:

a. Specify maximum squib pulse durations of 100 milliseconds at repetition rates not exceeding 1 pulse per 2 second interval in test procedures.

b. Interlock the motor driver command circuit and the squib firing command circuit in the AGE equipment to prevent application of the motor drive current before unlocking the motor. Input to HAC should point out the necessity for proper sequencing during tests and at time of flight.

c. Shield the wires connecting the squib driver output to the squibs to reduce the possibility of ambient electromagnetic fields initiating premature squib firing.

d. Measure the total system voltage drop from the solar array to the primary boom assembly plug so that the current limiting resistor in the squib firing circuit can be more accurately selected.

e. Investigate the possibility of ambient electromagnetic fields generating spurious squib firing commands at the squib driver input and the necessity for shielding the input leads.

f. Review the operating conditions imposed on the CPD boom uncaging squib firing circuits and the reliability of these circuits under these conditions.

The possibility of premature firing of the squibs due to a transistor failing in a shorted mode will also be investigated.

3.2.2 BOOM ELEMENT CRACKING

The primary boom element had cracked during the series of engineering evaluation tests; this cracking was found to be caused by:

a. The element cracked at the drum support rollers as a result of insufficient element stored on the drum.

b. The element cracked at the end cap attachment.

The original design included a storage drum with capacity for storage of 150 feet of tape. However, the length of the tape was later reduced to 123 feet for the ATS-D configuration and 132 feet for the ATS-A. To compensate for the reduced storage capacity, a snubber was provided on the kidney slot to fill up the slot and create an interference fit which would preclude excessive drum motion.

The semicylindrical mounting plate at the end cap attachment forced the boom element to assume a circular shape faster than it normally would. This unnatural restraint caused the edges of the element to scissor excessively at the attachment point. A flat plate was added to allow the element to assume a circular shape at a more natural rate. In addition to these two modifications, other changes were made to further prevent cracking. These included:

a. Double tapes on the outboard 12 inches of boom element

b. Additional lateral support for the tip plug within the tip mass and for the tip mass with respect to the component structure

c. Flared entry to the guidance at the in-board end

d. Increased stiffness of the erection unit structure

Retrofits were completed at GE and the causes for element cracking were eliminated as reported in the Seventh Quarterly Report. The success of these modifications was further demonstrated as evidenced from the results of the many vibration tests that were performed in connection with the investigation of the tip mass uncaging problem.

3.2.3 CLUTCHING

Clutching was included in the primary boom design to enable either the extension motor or the scissor motor to drive the opposite function in case one of the motors should fail while in orbit. In normal mode, each motor would perform its designated function. In emergency mode, however, the extension motor or scissor motor could perform the other task through the action of a clutch that interchanged the gear trains. Four commands were assigned by NASA to permit clutching on ground command. However, several problems became evident in an attempt to implement the hardware. At one point, a problem existed because the clutch could not be disengaged in the normal mode at the extremes of scissor angle. The clutch was redesigned; the most significant difference being a reduction in the height of the clutch teeth which, in turn, reduced the stroke requirements of the clutch solenoid. These changes were incorporated into both prototype units. When the modification was evaluated, the most repetitive problem was that the clutch continued to jump out of mesh at the extremes of scissor angle (where loads are the highest). Several modifications of this design were attempted, but the clutch never performed to the satisfaction of NASA or GE.

It was concluded that, instead of increasing reliability, the normal mode operation was being compromised because of the difficulties encountered with the clutch mechanics. It was agreed jointly by NASA and GE to eliminate the backup mode. The clutches were deactivated and parts, such as the solenoid and the solenoid force transmission linkage, were removed. The booms are now operated only in the normal mode wherein the extension motor drives the extension drive train and the scissor motor drives the scissor drive train.

Prototype units P2-a and P2-b were modified for normal mode operation before they were shipped to HAC. The clutch in both units was mechanically constrained to stay in mesh in

the normal mode. The configuration of the flight unit, now under construction at deHavilland, will incorporate only normal mode operation pending successful component qualification tests on the P1 Prototype.

3.3 DAMPER BOOM

Component qualification testing of Prototype No. 1 (S/N 11) damper boom was begun at GE on 6 June.

3.4 TESTING

The primary purpose of the T1-b unit was as a thermal-vacuum test bed, and later as a vibration test bed, after the completion of the temperature test series. As delivered to GE, the transmission unit of the T1-b was sealed with a pressure of 7 psia internal to the transmission. This unit was the first one delivered that was pressurized and sealed; the T1-a was not sealed when delivered.

The T1-b was tested in the 8 by 10 foot thermal-vacuum chamber at temperatures of 0° and 140°F. One series of tests included uncaging at the two temperature extremes in both the normal and standby modes. Another series of tests was run to simulate the boom functions in orbit after uncaging. As a condition for these tests, the tip masses were removed and the unit was exposed to high and low temperature soak; then the booms were extended, retracted,and scissored, in both modes.

These tests were all successfully performed; no degradation of the hermetic sealed unit was observed. The details of these tests will be published as a logbook history.

3.5 UNIT STATUS

The P2-a Primary Boom Prototype package was sent to HAC for a pre-system electrical checkout. It was not thus a true prototype, but HAC required the unit to meet some of their testing schedules. Upon completion of the system checks, P2-a was returned to deHavilland by way of GE for incorporation of the latest vibration-worthy modifications. The unit has since been sent back to HAC after being refurbished to prototype standard. The

unit deviates from Prototype P2-b only in that the hermetically sealed drive unit in the P2-a must now be operated at ambient pressure. This resulted when the sealed unit was opened to repair the transmission unit that was damaged as a result of test equipment failure, and attempts to reseal the box were unsuccessful. NASA has accepted the P2-a on a waiver.

3.5.1 PROTOTYPE P2-b

As a result of a schedule decision, the P2-b was artificially rigged to prevent tip mass uncaging and it was shipped to HAC for use in vibration testing on the ATS dynamic vehicle. At that time the P2-b was not a true prototype and it was planned to retrofit upon completion of the HAC tests. This retrofit was later completed by GE. All vibration fixes were incorporated, but the unit was not modified electrically to fire the caging squibs. The squibs on the P2-b must be fired by wiring direct to the squibs from an external source as opposed to routing through the interface connector.

SECTION 4

COMBINATION PASSIVE DAMPER

4.1 HARDWARE STATUS

The following list is the current status of the CPD units.

a. Engineering Unit 1 - Testing has been completed. No further work is planned on this unit.

b. Engineering Unit 2 - The unit has been assembled to the point of installing the outer case. In addition to using this as the ATS-D/E qualification unit, it is also planned for use in evaluating the failures of Prototype 1 (see Section 4.4).

c. Prototype 1 - The unit has been partially disassembled in order to remove the lamp and solenoid that failed during vibration tests (see Section 4.4 for report on failures).

d. Prototype 2 - The unit was delivered to HAC for systems test on 11 May 1966.

e. Flight Unit 1 (ATS-A) - The unit is partially assembled and has been placed on hold pending evaluation of failures on Prototype 1.

f. Flight Units 2 and 3 (ATS-D/E) - Parts are being manufactured.

4.2 DESIGN AND DEVELOPMENT

4.2.1 GENERAL

Design effort during this quarter has been primarily resolving minor problems that occurred during manufacturing and assembly of Prototype Units 1 and 2.

4.2.2 FLIGHT UNIT MODIFICATIONS

The modifications to flight units due to conditions noted during assembly and test of prototype units are:

a. Color coding connector brackets in addition to connector identification on brackets. This was done to avoid mismating at HAC.

b. Replaced fiberglas thread with nylon thread on thermal blankets. Fiberglas thread was fraying and producing lint in the unit.

c. Removed soft stop assembly. Analysis showed that soft stop assembly is not required.

4.2.3 DRAWING REVISIONS

The following revisions were made to CPD drawings:

a. A cleanliness specification was added to the top assembly drawing (47E207100) to ensure that the unit is clean and that no magnetic damage has been done. The problem has been keeping the unit clean during assembly and test.

b. A checkout list was added to the top assembly drawing (47E707100) to ensure that all protective devices are in place.

c. The CPD interface drawing was updated with NASA and HAC representatives.

d. A harness tooling drawing and a harness installation drawing were added. Previous method of manufacturing and installing harness was not satisfactory.

e. Revised alignment procedures based on problems encountered in the assembly of Prototype Unit 1 (see Section 4.3.1.1).

4.2.4 PROCUREMENT AND MANUFACTURE

The problem that existed with the electron beam welding process that is used to fabricate the primary CPD support structure has been solved. A quantity of weldments were fabricated and evaluated to ensure a sufficient supply to meet the requirements of the contract.

The Belleville washers were originally manufactured to unrealistic drawing tolerances in the light of accepted manufacturing methods. Three units were made as close to the drawing requirements as possible with the use of available tooling, and they were accepted on the basis of functional test results. The performance of these washers was uniform.

4.3 TESTING AND TEST EQUIPMENT

4.3.1 PROTOTYPE 1

During the testing of Prototype Unit 1 several problem areas occurred, some of which are major. These problems are discussed in the following paragraphs.

4.3.1.1 Minor Problem Areas

What appeared to be a mode change switch malfunction was traced to the improper installation of the ramp on the solenoid shaft that actuates the switches. The ramp was free to rotate in such a way that it missed one switch actuator arm. The ramp was properly installed in the CPD, and the locking set screw was changed from a nylon tip to a cone point to ensure gripping of the ramp mounting shaft. In addition, manufacturing planning has been revised to incorporate a check for proper installation.

A misalignment of the PHD was noted. A check of the installation instructions for this unit showed that the procedure was inadaquate to obtain the desired results. This procedure has been modified and two units were installed using the new procedure. Test results showed that the new method gives desired results.

During testing, it was noticed that one cable cutting squib had not been fired. The squib was removed and fired with a 3.2-amp all fire current in 7 milliseconds and it cut the cable cleanly. The normal firing current is 5 amps for 20 milliseconds. The problem was traced to a test console switch either malfunctioning or not being activated by the operator. The test console has been reworked such that only one switch is required to fire both squibs rather than two switches as previously required.

4.3.1.2 Major Problem Areas

During vibration of Prototype 1 to qualification levels, the clutch solenoid and one of the lamps in the angle indicator failed. The solenoid did not change modes, and one lamp filament broke and shorted against the other. (See Section 4.4 for analysis of this problem.)

Testing of Prototype 1 was discontinued pending solution to the failures mentioned in the previous paragraph. At the time of the failures, testing was complete through the environments. Pre-environment functional tests on Prototype 1 will be repeated as required. All enviromental tests will be repeated except those deemed not relevant to the failures.

The post environment eddy-current damping test was discontinued due to erratic readings. The CPD cover was removed and a ball of "fuzz" was found between the rotor and stator. Analysis of the material indicated it to be nylon presumably from the lacing cord used to tie the harness down or from a laboratory coat. Stricter cleanliness requirements have been instigated and all personnel made aware of the problem.

4.3.2 PROTOTYPE 2

All malfunctions on Prototype 2 were resolved. In summary, they were:

a. Angle indicator out of tolerance. The CPD specification (SVS-7314) was revised to allow a greater tolerance on accuracy ($\pm 2^{o}$ from 0° to 20°). The unit will give 0° position accuracy to within $\pm 1^{o}$.

b. PHD torsional restraint testing problems insofar as testing the unit to the specification when installed in the CPD. The trouble is due to setting up of test equipment. The problem has been resolved by putting an upper maximum value based on previous tests and maintaining the minimum called for in the specification. This deviation has been granted by NASA based on test histories of previous units and the fact that the PHD is tested as a component to strict tolerance limits.

c. Soft stop misalignment. No further action is required since the requirement for a soft stop has been deleted.

4.3.3 ENGINEERING UNIT 2

The unit is being retrofitted with two new lamps, one from each vendor. (Chicago Miniature Lamp Works and Los Angles Miniature Products.) This is being done as part of a lamp qualification program based on the failure of the lamp during testing of Protoype 1. Accelerometers will be mounted on the lamp housing and the solenoid to measure amplification factors during the vibration tests.

4.3.4 TEST RESULTS

Prototype 1 pre-environmental test results were within specification. Tests will be repeated as mentioned in paragraph 4.3.1.2. The voltage degradation tests were performed on the solenoid and the angle indicator with the following results:

a. Solenoid operated at -16 vdc (min design voltage -22.3 vdc).

b. Angle indicator operated with -16 vdc bias voltage (min design voltage -23.5 vdc) and -3.19 vdc on the lamp (min design 5.4 vdc).

4.4 FAILURE ANALYSES

4.4.1 LAMP

The angle indicator lamp filament that failed during vibration was found to have broken just above the attacment to the filament mounting post and hooked to the base of the other filament. The failure occurred due to a structural defect in the wire or the wire was overstressed. Visual inspection to date has not been fruitful because the glass envelope restricts good observation of the failed section. The lamp is being dissected and examined microscopically.

This is the first filament to fail to date under any conditions of testing. The lamps in Engineering Unit 1 were subjected to the same vibration levels as Prototype Unit 1. In addition, all lamps were initially vibrated to the random CPD acceptance levels as a screening test. No lamps have failed this test to date other than one on which a lead broke due to improper mounting. In additon, several lamps have been vibrated as part of the engineering developement test with no failures.

Future activity concerning this failure will be to continue the failure analysis underway and requalify the lamps as follows.

a. Two flight quality lamps from CML will be installed in Prototype 1 and subjected to the same tests that failed the unit.

b. Two lamps (one from each vendor) will be installed in Engineering Unit 2 and subjected to the same qualification tests as Prototype 1 (this unit is a ATS-D/E configuration). Accelerometers will be installed in the area of the lamp, and solenoid amplification factors determined. If necessary, these factors will be used to conduct vibration tests on the lamp only in an effort to establish if the failure was a random or design failure.

4.4.2 SOLENOID

The solenoid failed to operate after environment tests. Electrically, the solenoid was all right, but the solenoid would not change modes. The solenoid was removed from the unit and returned to the vendor (Koontz-Wagner) for tear down. A careful disassembly was performed in which it was noted that the spring loaded detent balls used to hold the armature of the solenoid in the retracted position - ECD mode (flight caged condition) - had severely deformed the detent groove. One ball (2 balls per mode) was jammed in its groove and is assumed to be the cause of the failure. An exhaustive dimensional check has shown nothing to be abnormal other than the wear areas. Hardness checks have been made on the materials and nothing unusual was found. The only unusual conditions noted are the machining marks to both sides of the V-groove as shown in Figures 4-1 and 4-2. The vendor has been unable to explain these marks.

Figures 4-1 and 4-2 show the damaged ball detent groove. Figure 4-1 is the groove area opposite the jammed ball.

This is the only solenoid to fail to date since reworking the shaft end. Six units have passed the solenoid qualification tests which include a vibration test of an approximate amplification of 2.5 over the CPD qualification test levels (1.5 over solenoid qualification level). Two of these units were previously dissected by the vendor and a comparison to the failed unit did not reveal the same condition or any evidence of the same condition.

Two additional units were revibrated in an attempt to repeat the failure with no success. The acceleration level was pushed up to 50g's in the 36 to 400 cps range (as compared to 11.5 g's from 25 to 250 cps and 18.5 g's from 250 to 400 cps for the CPD qualification tests). One of these units and Engineering Unit 1 solenoid were dissected with no repeat of the failure condition noted. In addition to these solenoid tests, the solenoid in Engineering Unit 1 passed the same environmental tests as the failed unit; engineering tests have been performed with no problems.

Future activity concerning the failure will be to continue the failure analysis and requalify the solenoid as follows.

a. Install the flight spare unit into Prototype 1 and subject it to the same tests that failed the unit previously.

b. Install an accelerometer on Engineering Unit 2 solenoid. Assemble into the CPD and determine amplifications during vibration. If necessary, these factors will be used to conduct vibration tests on the solenoid (by itself) in an effort to determine if the failure was random or design failure.

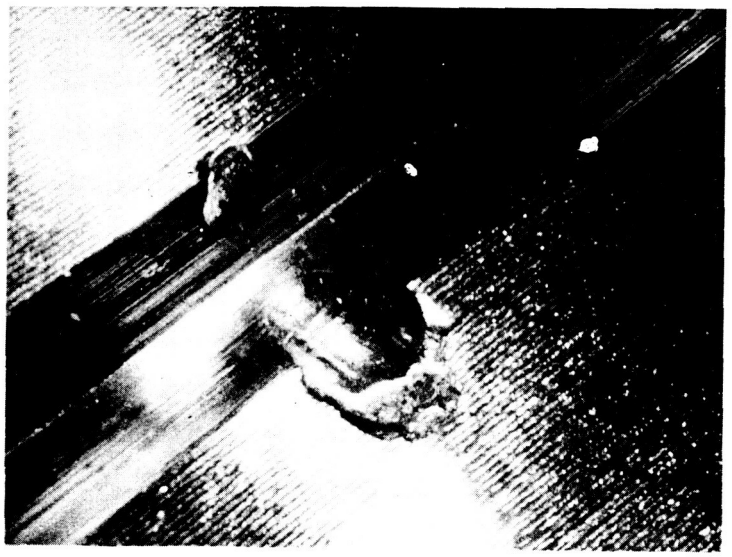

Figure 4-1. Deep indentation at edge of V-groove caused by detent ball in the ECD mode

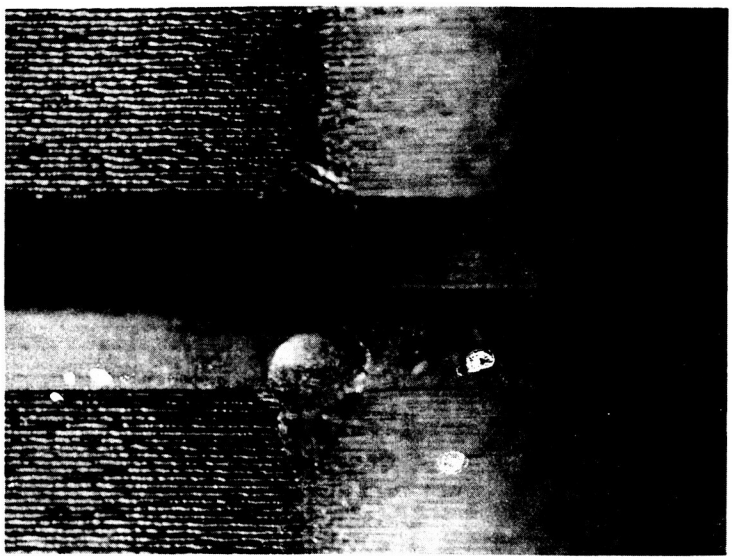

Figure 4-2. Indentations in wall of V-groove at the opposite detent ball in ECD mode

SECTION 5

ATTITUDE SENSOR SUBSYSTEM

5.1 TV CAMERA SUBSYSTEM

Specifications and drawings of the TVCS were revised and reissued to reflect the latest configurations.

The P-2 cameras, to be used at HAC for protopype vehicle testing, were tested in-house, modified to reduce the composite video level and to eliminate O-ring grease inside the camera, and then shipped to HAC. These units represent the flight configurations with the following exceptions:

a. The units contain O-rings

b. The units contain non gold-plated connectors

c. The units do not have the increased sun shutter circuit sensitivity

d. The units do not have the reversed spring tension incorporated into the sun shutter blade mechanism

e. The units do not have diodes incorporated into the sun shutter command circuit to prevent actuation of the sun shutter when the command rises to 0 vdc (from -24 vdc).

The LSI drawings and acceptance test plans reflecting the TVCS flight configurations were approved by GE Design and Product Assurance Engineering.

The Component Qualification Unit and the Engineering Life Test Unit were received during the quarter. Testing was started on both units.

Engineering Unit No. 1 was placed on life test in early June and had accumulated 557 hours of failure-free operation at the end of the quarter. No adjustments are being made to this unit while it is on life test. Engineering Unit No. 2 will also be on life test at the beginning of the ninth quarter (July 1966).

Design changes of significance made during this quarter were as follows:

a. Increased sun shutter circuit sensitivity to properly protect the vidicon from sun damage. This was accomplished by removing the inconel coating from the quartz window in front of the sun shutter optics, and by changing the electrical actuation level of the sun shutter circuit.

b. Eliminated sluggish shutter opening operation when coming out of the field of view of the sun. This was accomplished by removing an unnecessary resistor in the sun shutter circuit thereby increasing the gain of the circuit.

c. Eliminated problem of the sun shutter opening during vibration. This was accomplished by reversing the static torque applied to the shutter blade. The spring tension presently holds the sun shutter blade in the closed position.

d. Reduced composite video voltage level to 1.00 volt peak-to-peak maximum. This was accomplished by reducing the sync level, the blanking level, and the video level.

e. Replaced and/ or replated all connectors having tin or cadmium finishes.

f. Removed all rubber type O-rings from the TVCS.

g. In doing item f, all grease was also removed from the TVCS.

h. Added diodes to the sun shutter command circuits to prevent the sun shutter from being actuated by improper signals or by bus changes when other commands on the same matrix are sent.

Testing performed during the eighth quarter verified the validity of the above design changes. In addition to the above testing, items accomplished were the viewing of the lexan tip targets, coated with aluminum oxide and ecco-spheres. This viewing was done in bright sunlight on the roof of the main building at GE. The TVCS worked very well outside and was able to distinguish the targets when placed against a background of different color.

Engineering Unit No. 2 was tested in the thermal-vacuum chamber and exposed to solar conditions. The data obtained closely agreed with the thermal analysis reported in the last quarterly progress report. A summary of the data is shown in Table 5-1.

The alignment "problems" previously discussed have been solved in the following manner:

a. The camera sighting axis will be within 2° of the mounting bracket "axis".

b. This angular error will be measured at GE and the information will be available to all concerned. This information will be incorporated into the boom tip target position data as a correction factor to properly locate the boom tip targets in flight. These techniques eliminated the need for a redesign of the bracket, camera, and vehicle structure.

Since the TVCS is manufactured with commerical electrical parts, random failures have been occurring during the early life of the TVCS. Testing performed at GE and at LSI on this model TVCS, and on similar models, indicates that "infant mortality" is reduced after approximately 100 hours of TVCS operation. In order to allow the best chance for the cameras to operate successfully in flight (short of a complete electrical redesign using high reliability parts) the TVCS will be exposed to a burn-in test at GE prior to the official qualification and/or acceptance tests. The duration of this test, performed in a thermal-vacuum environment, will be between 50 and 75 hours depending on the accumulated hours on the TVCS when shipped from LSI.

Table 5-1. Solar Vacuum Test Summary - TVCS

Temp Location	Actual Temp °F	Actual Δ °F	Calculated Δ °F
Control Unit Base			
*Sun On	101.5	-----	-----
Sun Off	38.5	-----	------
Control Unit			
Sun On	109.4	+ 7.9	+12
Sun Off	49.2	±10.7	+12
Camera Base			
Sun On	97.5	-----	-----
Sun Off	37.1	-----	-----
Camera Barrel			
Sun On	102.0	+ 4.5	+ 5.0
Sun Off	32.7	- 4.4	-----
Camera Window			
Sun On	150	+52.5	+51
Sun Off	- 11	-48.5	-53.5
Vidicon Face			
Sun On	113	+15.5	-----
Sun Off	50	+12.9	-----

*The "Sun On" represents the maximum flux condition, and the "Sun Off" represents the minimum flux condition.

5.2 SOLAR ASPECT SENSOR

5.2.1 SOLAR ASPECT SENSOR TESTS

In conjunction with the compound angle tests that were conducted on the Solar Aspect Sensor, an additional test was performed to increase the confidence level in the register output.

The detector was mounted to the test fixture as shown in Figure 5-1.

The initial condition had the solar simulator normal to the detector. The detector was then rotated by the 36-inch rotary table and the output recorded for various table angles.

The output of the register was calculated for given table angles and the effect of this angle on Eye No. 1. Figure 5-2 illustrates the geometry for the calculation of the effective angle sensed by Eye No. 1.

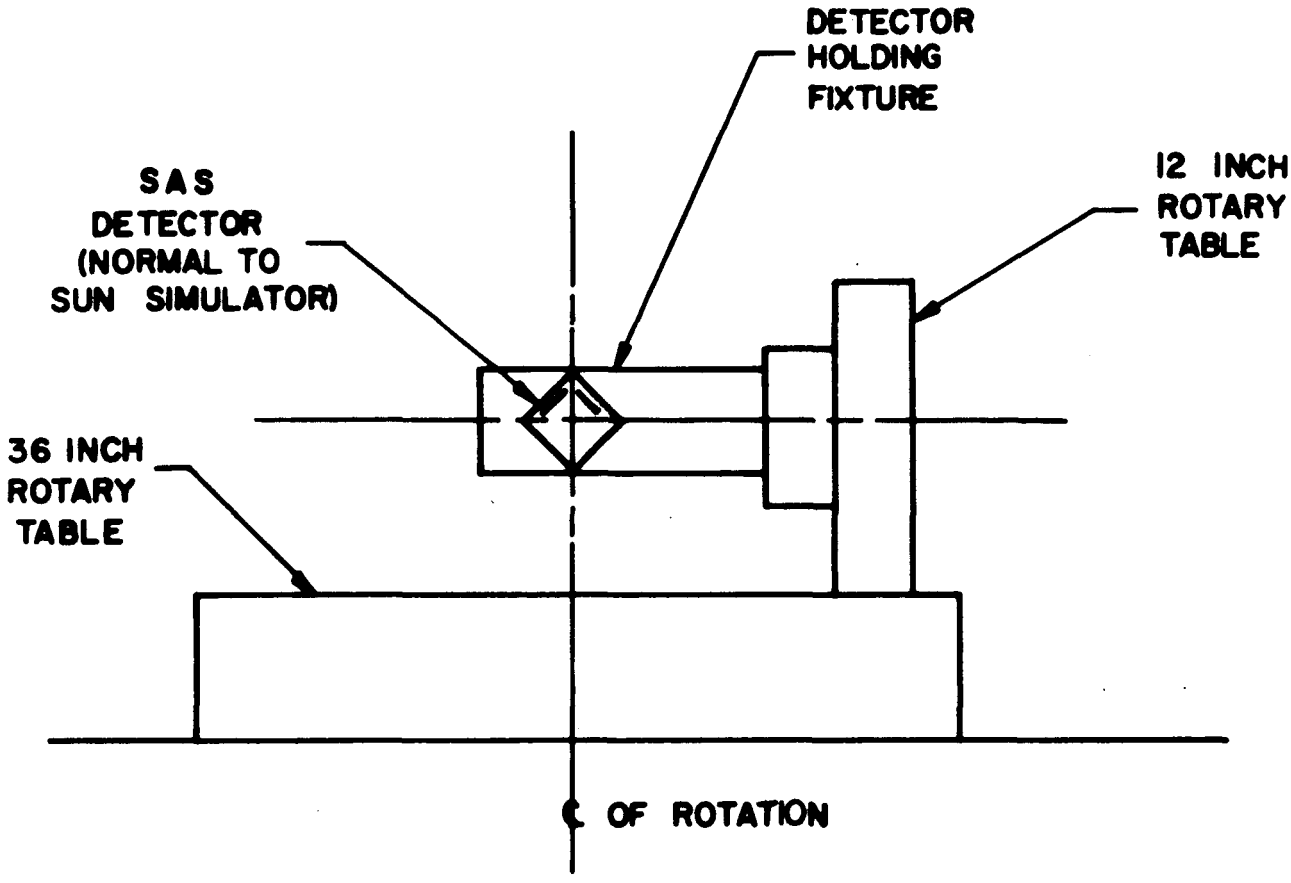

Figure 5-1. SAS Detector and Test Fixture

Angle ϕ is defined as the table induced angle about the Z'-Z' axis. Angle β is the angle detected by Eye No. 1. Line OE is defined as the normal to the detector face.

A typical calculation is as follows:

Induce a table angle of 25°; this will be rotation about the Z'-Z' axis.

Angle $\phi = 25^{o}$

Assume OE = 1; this can be done without loss of generality.

$\therefore \beta = \text{Tan}^{-1} 0.466$

$\beta = 33.4^{o}$

This value is the theoretical value of the angle as sensed by Eye No. 1. This was compared to the actual register output.

Actual	Theoretical
32.5^{o}	33.4^{o}

This angular difference is still below the 1.3^{o} band given to compound angles. The curve on Figure 5-3 is a plot of one eye of theoretical value of the angle versus actual readout of that eye.

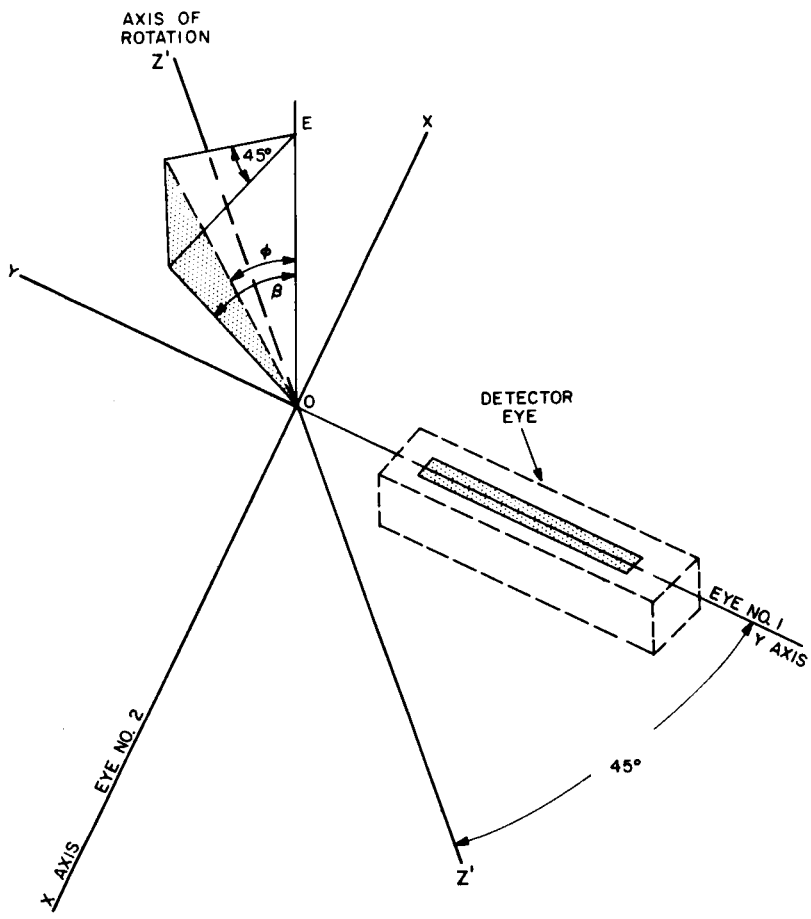

Figure 5-2. Sensed Angle Geometry

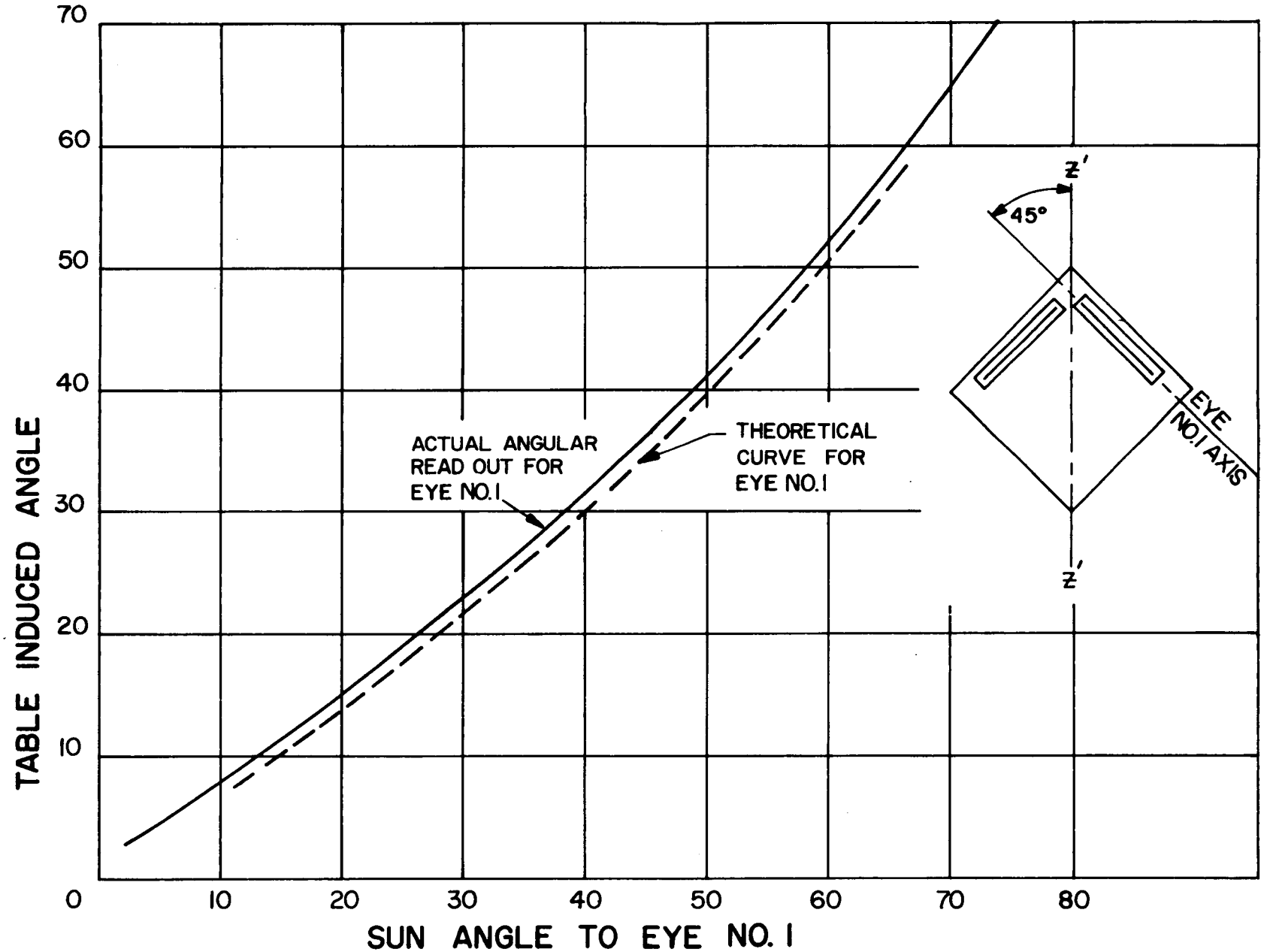

Figure 5-3. Plot of Theoretical Value versus Actual Readout

5.2.2 SOLAR ASPECT SENSOR QUALIFICATION TESTS

During the qualification of the Solar Aspect Sensor electronics, the dielectric strength of the unit was tested using a potential of 600 volts rms. This potential was applied to mutually insulated pins for a period of one second. A functional test showed improper operation of the electronics and the unit was returned for failure analysis. Investigation revealed that 50 percent of the bit amplifier transistors had developed an emitter-to-base short. Analysis indicated that an instantaneous application of maximum test voltage to individual connector pins resulted in a charging current surge which exceeded the power dissipation capabilities of the bit amplifier transistors.

The test voltage for the Hi-pot test has been reduced from 600 volts rms to 200 volts rms, and will be used with a shorting bar that will tie all pins together which are not common to chassis ground. The test voltage will not be applied at the maximum level but it will be increased slowly to the maximum.

The 200 volts rms now being used for the Hi-pot test constitutes the application of a peak voltage that is approximately 10 times the normal operating voltage. This is considered an adequate safety margin for Hi-pot testing of the Solar Aspect Sensor. Hi-pot test conditions are further discussed in Section 6.

Qualification testing of the SAS was completed. See Table 6-3 for a summary of the test results.

5.3 POWER CONTROL UNIT

Revision D of the PCU schematic (GE 47J207904) is shown in Figure 5-4. This information supersedes the PCU schematic that was published in the Sixth Quarterly Report. The drawing reflects the changes of the motor-driver output transitors (Q 19, through Q 22) from 5-amp to 20-amp transistors, and the required changes to circuit resistance. The effectivity of the change is shown in the table on sheet 2 of Figure 5-4.

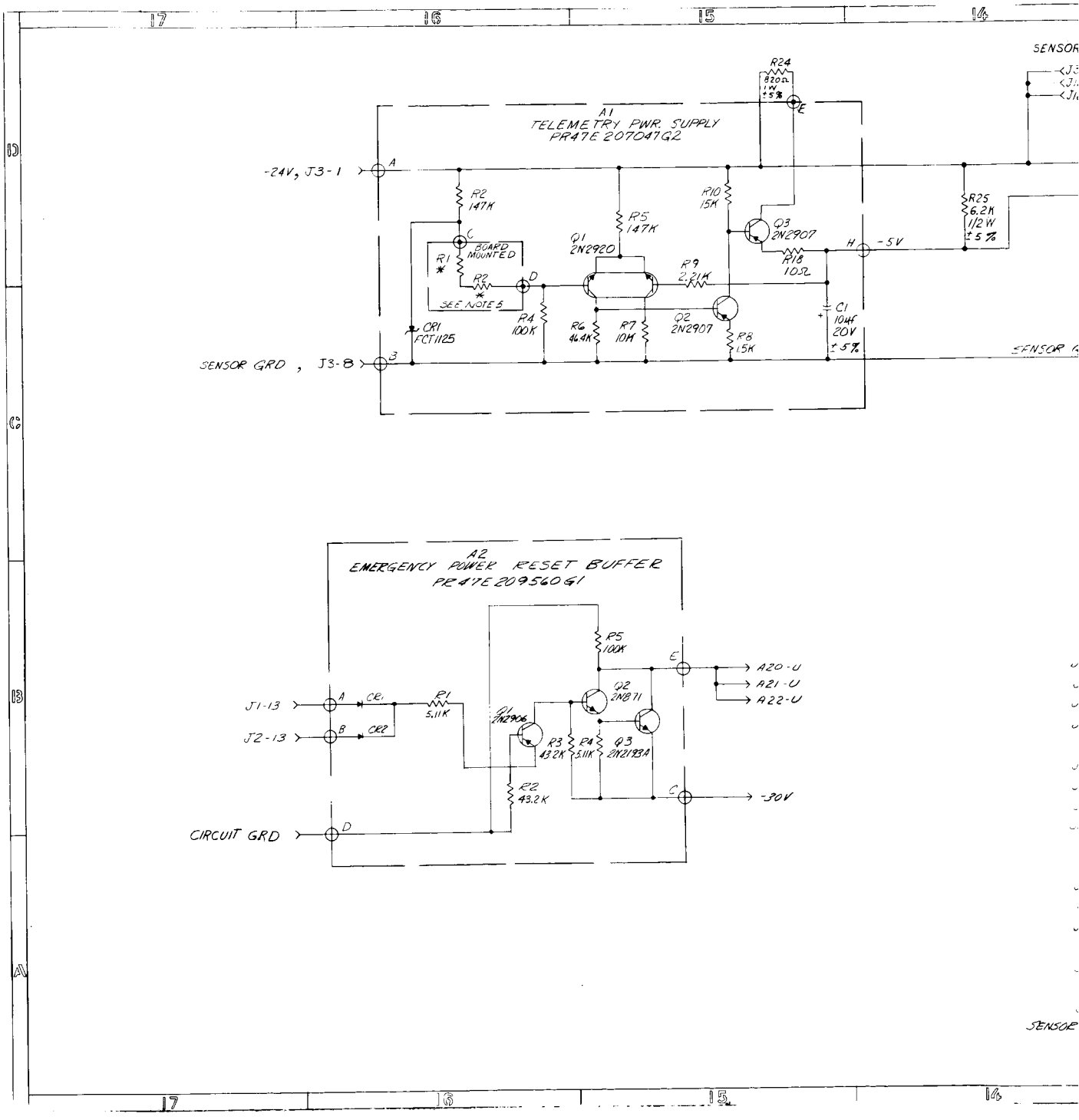
A1
TELEMETRY PWR. SUPPLY
PR47E207047G2
-24V, J3-1
SENSOR GRD , J3-8
R24
820Ω
1W
±5%
R2
147K
R1
*
BOARD MOUNTED
R2
*
SEE NOTE 5
CR1
FCT1125
R4
100K
R5
147K
Q1
2N2920
R6
46.4K
R7
10M
R9
2.21K
Q2
2N2907
R8
15K
R10
15K
Q3
2N2907
R18
10Ω
C1
10μf
20V
±5%
-5V
R25
6.2K
1/2W
±5%
SENSOR
A2
EMERGENCY POWER RESET BUFFER
PR47E209560G1
J1-13
J2-13
CIRCUIT GRD
CR1
CR2
R1
5.11K
Q1
2N2906
R5
100K
Q2
2N871
R3
43.2K
R4
5.11K
Q3
2N2193A
R2
43.2K
A20-U
A21-U
A22-U
-30V

5-9-1

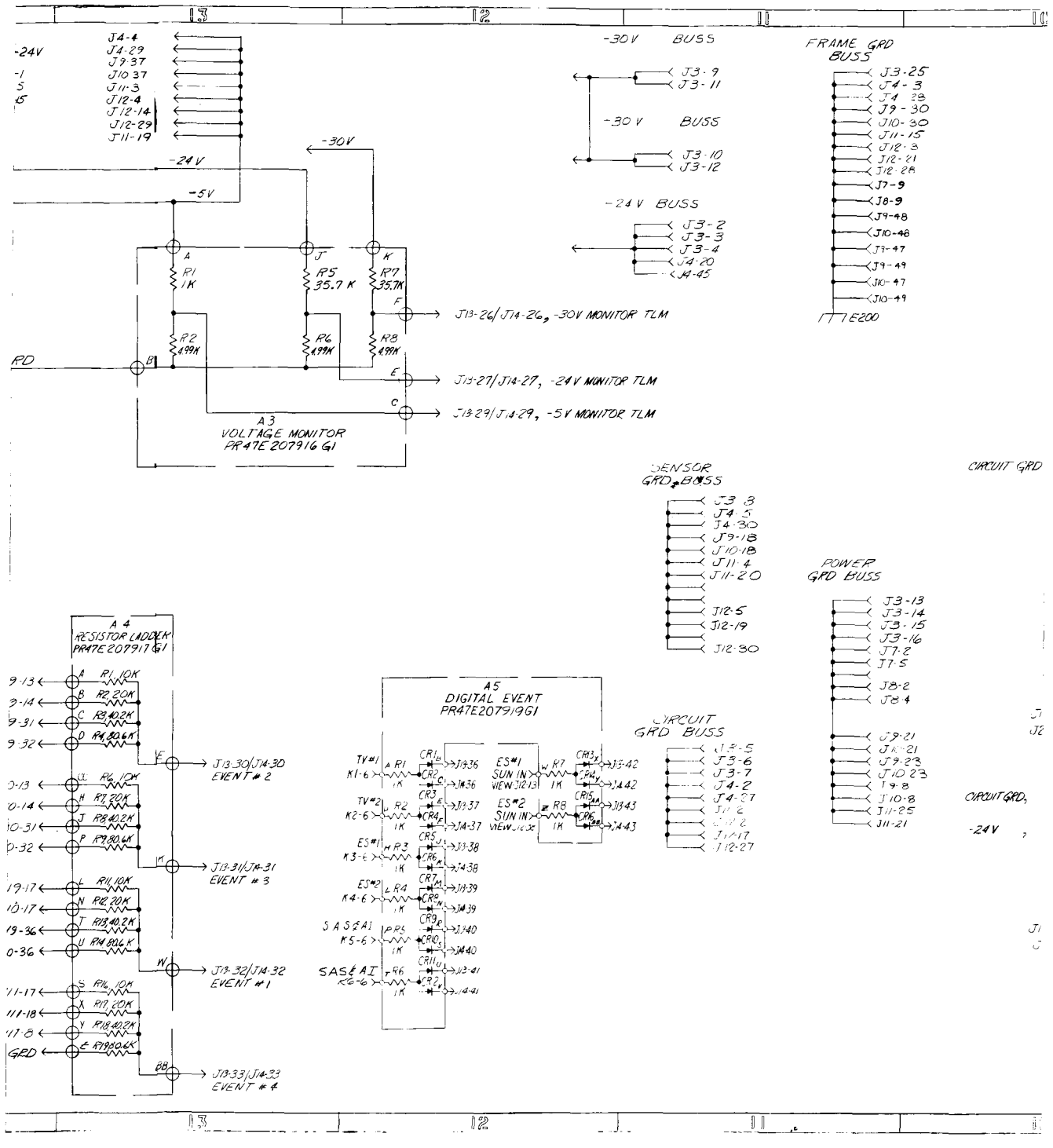
-24V
J4-4
J4-29
J9-37
J10-37
J11-3
J12-4
J12-14
J12-29
J11-19
-24 V
-5V
-30V
A
R1
1K
J
R5
35.7 K
K
R7
35.7K
F
J13-26/J14-26, -30V MONITOR TLM
R2
4.99K
R6
4.99K
R8
4.99K
RD
B
E
J13-27/J14-27, -24 V MONITOR TLM
C
J13-29/J14-29, -5V MONITOR TLM
A3
VOLTAGE MONITOR
PR47E207916 G1
-30V BUSS
J3-9
J3-11
-30 V BUSS
J3-10
J3-12
-24 V BUSS
J3-2
J3-3
J3-4
J4-20
J4-45
FRAME GRD
BUSS
J3-25
J4-3
J4-28
J9-30
J10-30
J11-15
J12-3
J12-21
J12-28
J7-9
J8-9
J9-48
J10-48
J9-47
J9-49
J10-47
J10-49
E200
SENSOR
GRD BUSS
J3-8
J4-5
J4-30
J9-18
J10-18
J11-4
J11-20
J12-5
J12-19
J12-30
CIRCUIT GRD
POWER
GRD BUSS
J3-13
J3-14
J3-15
J3-16
J7-2
J7-5
J8-2
J8-4
J9-21
J9-23
J10-23
J10-8
J11-25
J11-21
CIRCUIT
GRD BUSS
J3-5
J3-6
J3-7
J4-2
J4-27
J12-27
CIRCUIT GRD,
-24V
A4
RESISTOR LADDER
PR47E207917 G1
R1 10K
R2 20K
R3 40.2K
R4 80.6K
R6 10K
R7 20K
R8 40.2K
R9 80.6K
R11 10K
R12 20K
R13 40.2K
R14 80.6K
R16 10K
R17 20K
R18 40.2K
R19 80.6K
GRD
J13-30/J14-30
EVENT # 2
J13-31/J14-31
EVENT # 3
J13-32/J14-32
EVENT # 1
J13-33/J14-33
EVENT # 4
A5
DIGITAL EVENT
PR47E207919G1
TV #1
K1-6
TV #2
K2-6
ES #1
K3-6
ES #2
K4-6
SASEA1
K5-6
SASEA1
K6-6
R1
R2
R3
R4
R5
R6
1K
CR1
CR2
CR3
CR4
CR5
CR6
CR7
CR8
CR9
CR10
CR11
CR12
J13-36
J14-36
J13-37
J14-37
J13-38
J14-38
J13-39
J14-39
J13-40
J14-40
J13-41
J14-41
ES #1
SUN IN
VIEW J12-13
ES #2
SUN IN
VIEW J12-3
R7
R8
1K
CR13
CR14
CR15
CR16
J13-42
J14-42
J13-43
J14-43

54-2

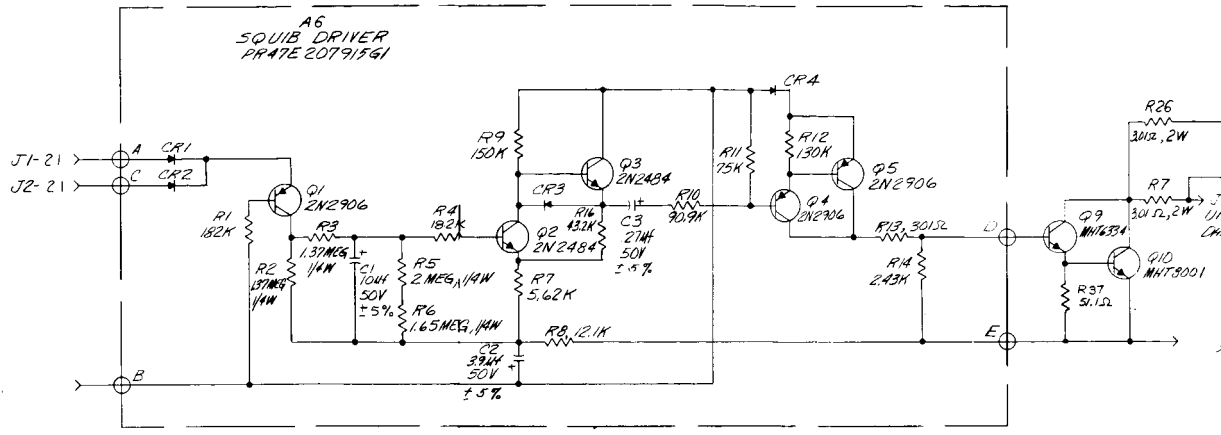
A6
SQUIB DRIVER
PR47E2079156I
J1-21
J2-21
A
C
CR1
CR2
Q1
2N2906
R1
182K
R2
137MEG
1/4W
R3
1.37MEG
1/4W
C1
10μF
50V
±5%
R4
182K
R5
2MEG, 1/4W
R6
1.65MEG, 1/4W
R9
150K
Q3
2N2484
CR3
R14
43.2K
C3
27μF
50V
±5%
Q2
2N2484
R7
5.62K
R10
90.9K
C2
39μF
50V
±5%
R8, 12.1K
B
CR4
R11
75K
R12
130K
Q5
2N2906
Q4
2N2906
R13, 301Ω
R14
2.43K
D
E
R26
301Ω, 2W
R7
301Ω, 2W
Q9
MHT6334
Q10
MHT8001
R37
51.1Ω

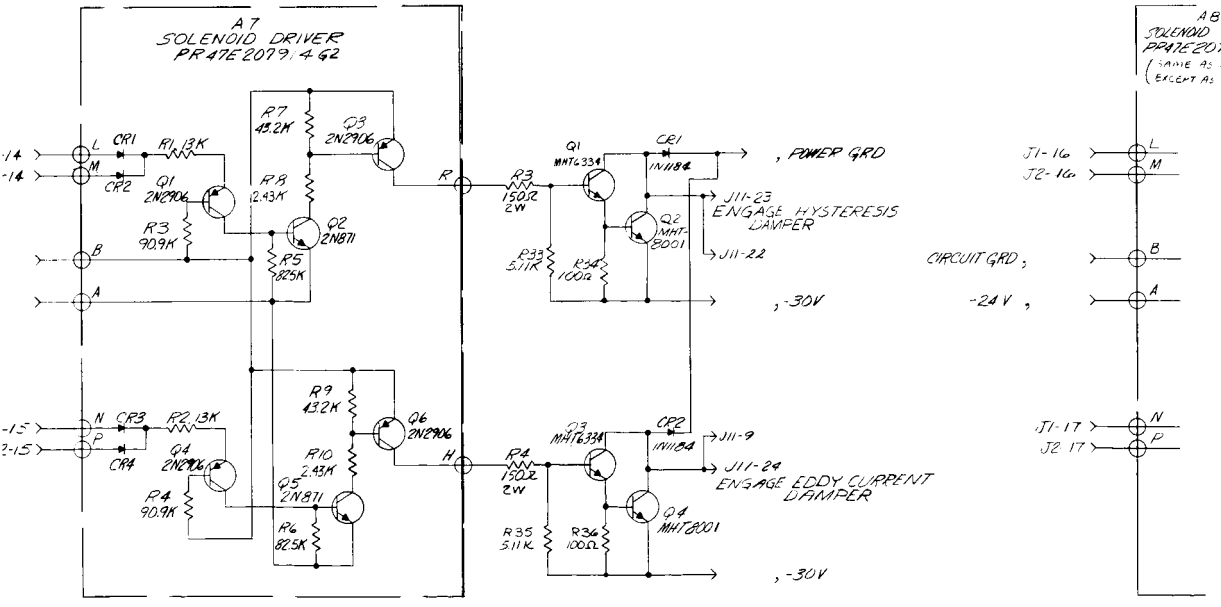
A7
SOLENOID DRIVER
PR47E2079146Z
L
M
CR1
CR2
R1, 13K
Q1
2N2906
R3
90.9K
B
A
R7
43.2K
Q3
2N2906
R8
2.43K
Q2
2N871
R5
825K
R
R3
150Ω
2W
Q1
MHT6334
CR1
1N1184
, POWER GRD
J11-23
ENGAGE HYSTERESIS
DAMPER
Q2
MHT-
8001
J11-22
R33
5.11K
R34
100Ω
, -30V
CIRCUIT GRD ;
-24 V ,
J1-16
J2-16
N
P
CR3
CR4
R2, 13K
Q4
2N2906
R4
90.9K
R9
43.2K
Q6
2N2906
R10
2.43K
Q5
2N871
R6
825K
H
R4
150Ω
2W
Q3
MHT6334
CR2
1N1184
J11-9
J11-24
ENGAGE EDDY CURRENT
DAMPER
Q4
MHT8001
R35
5.11K
R36
100Ω
, -30V
J1-17
J2-17
A8
SOLENOID
PR47E207
(SAME AS
(EXCEPT AS

5-9-3

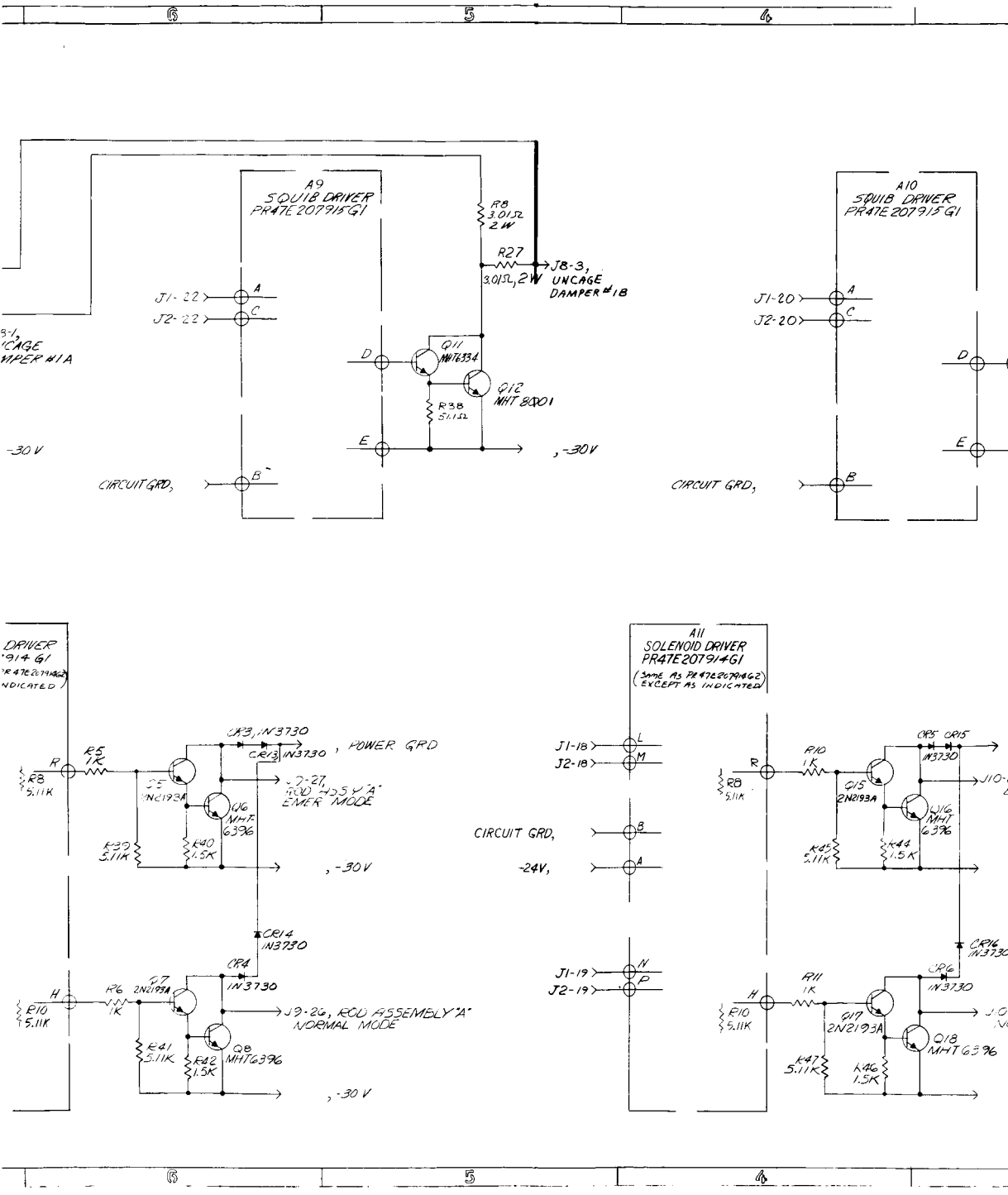
A9
SQUIB DRIVER
PR47E207915G1
R8
3.01Ω
2W
R27
3.01Ω, 2W
J8-3,
UNCAGE
DAMPER #1B
J1-22
J2-22
A
C
D
E
B
Q11
MHT6334
Q12
MHT8001
R38
5.11Ω
-30V
CIRCUIT GRD,
A10
SQUIB DRIVER
PR47E207915G1
J1-20
J2-20
A11
SOLENOID DRIVER
PR47E207914G1
(SAME AS PR47E207914G2 EXCEPT AS INDICATED)
J1-18
J2-18
L
M
CIRCUIT GRD,
-24V,
J1-19
J2-19
N
P
CR13, 1N3730
POWER GRD
CR14
1N3730
CR4
1N3730
J3-26, ROD ASSEMELY "A"
NORMAL MODE
R5
1K
R6
1K
R8
5.11K
R10
5.11K
R39
5.11K
R40
1.5K
R41
5.11K
R42
1.5K
Q6
MHT
6396
Q7
2N2193A
Q8
MHT6396
-30V
R10
1K
R11
1K
R25
5.11K
R44
1.5K
R47
5.11K
R46
1.5K
Q15
2N2193A
Q16
MHT
6396
Q17
2N2193A
Q18
MHT 6396
CR5
CR15
1N3730
CR16
1N3730
CR6
1N3730

5-9-1

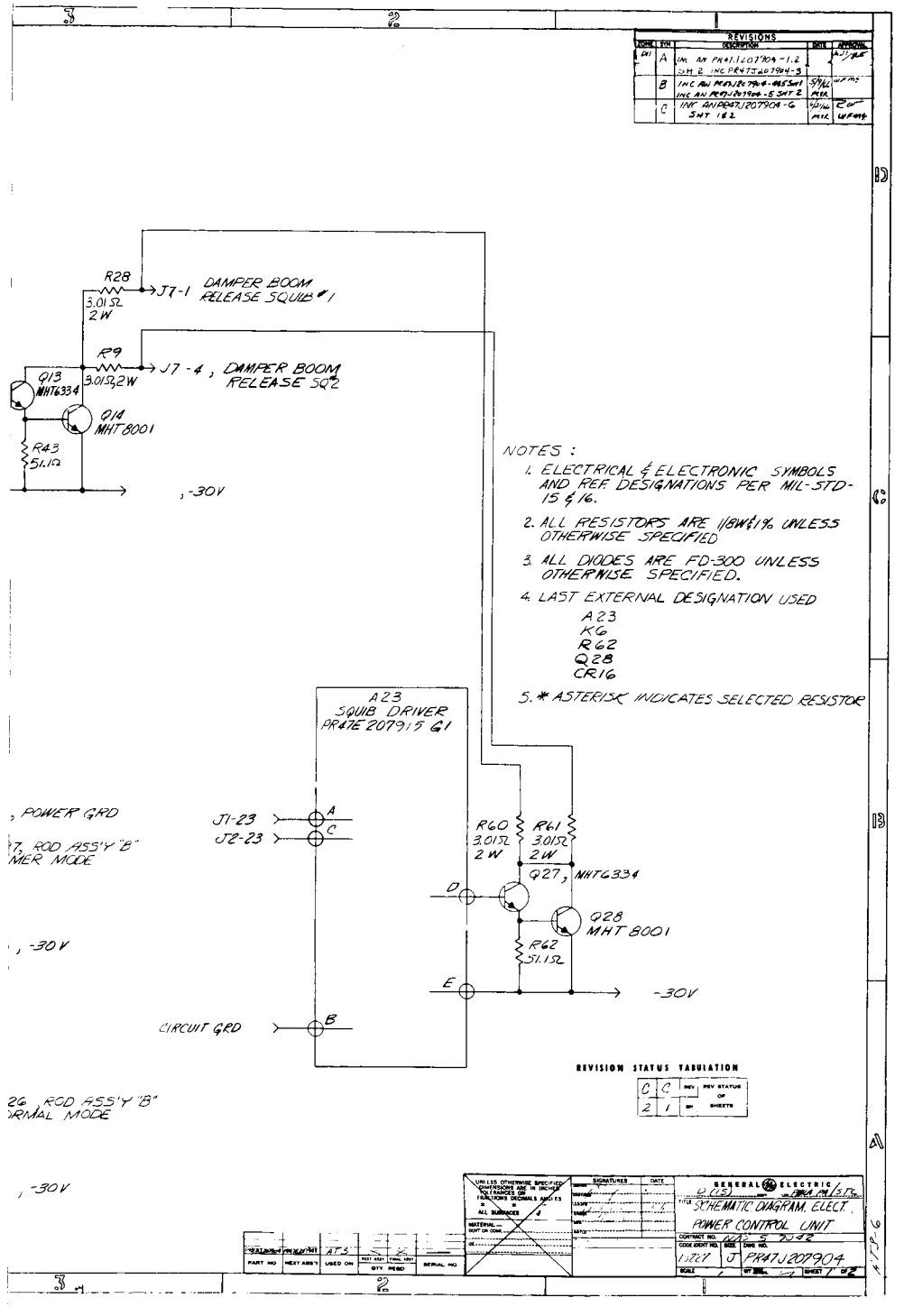

Figure 5-4. Power Control Unit Schematic (GE PR47J207904)(Sheet 1 of 2)

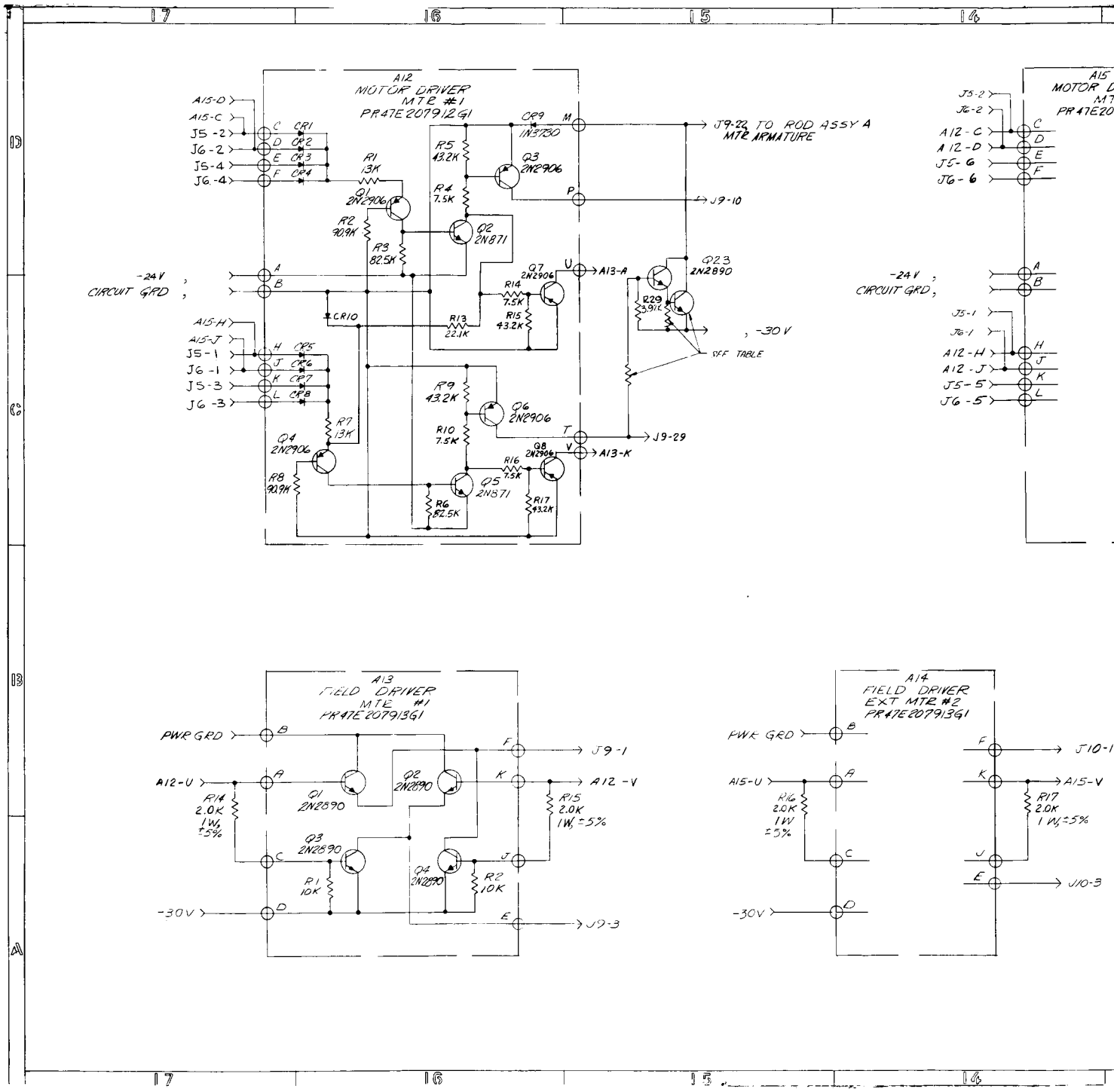
A12
MOTOR DRIVER
MTR #1
PR47E207912G1
A15-D
A15-C
J5-2
J6-2
J5-4
J6-4
CR1
CR2
CR3
CR4
R1 13K
Q1 2N2906
R2 90.9K
R3 82.5K
R5 43.2K
R4 7.5K
Q2 2N871
CR9 1N3730
Q3 2N2906
J9-22 TO ROD ASSY A MTR ARMATURE
J9-10
-24V
CIRCUIT GRD
Q7 2N2906
A13-A
R14 7.5K
R15 43.2K
R13 22.1K
CR10
Q23 2N2890
R29 3.91K
-30V
SEE TABLE
A15-H
A15-J
J5-1
J6-1
J5-3
J6-3
CR5
CR6
CR7
CR8
R7 13K
Q4 2N2906
R8 90.9K
R9 43.2K
Q6 2N2906
R10 7.5K
J9-29
Q8 2N2906
A13-K
R16 7.5K
Q5 2N871
R6 82.5K
R17 43.2K
A15
MOTOR D
M7
PR47E20
J5-2
J6-2
A12-C
A12-D
J5-6
J6-6
-24V
CIRCUIT GRD
J5-1
J6-1
A12-H
A12-J
J5-5
J6-5
A13
FIELD DRIVER
MTR #1
PR47E207913G1
PWR GRD
A12-U
R14 2.0K 1W ±5%
Q1 2N2890
Q2 2N2890
J9-1
A12-V
R15 2.0K 1W ±5%
Q3 2N2890
R1 10K
Q4 2N2890
R2 10K
-30V
J9-3
A14
FIELD DRIVER
EXT MTR #2
PR47E207913G1
PWR GRD
A15-U
R16 2.0K 1W ±5%
-30V
J10-1
A15-V
R17 2.0K 1W ±5%
J10-3

5-11-1

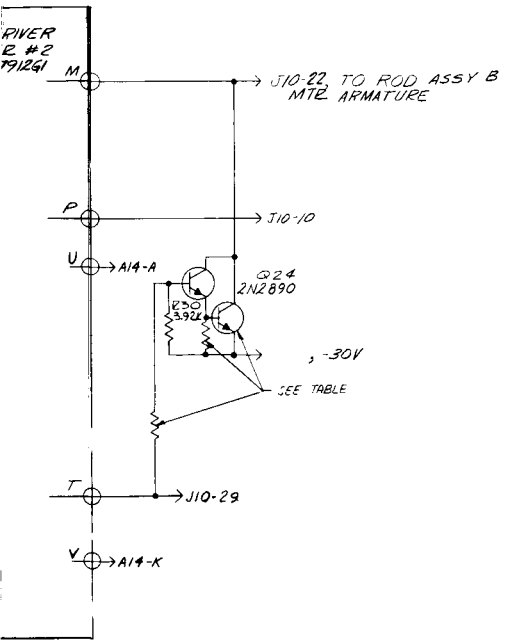
RIVER
R #2
79126I
M
J10-22, TO ROD ASSY B
MTR ARMATURE
P
J10-10
U
A14-A
Q24
2N2890
R30
3.92K
, -30V
SEE TABLE
T
J10-29
V
A14-K

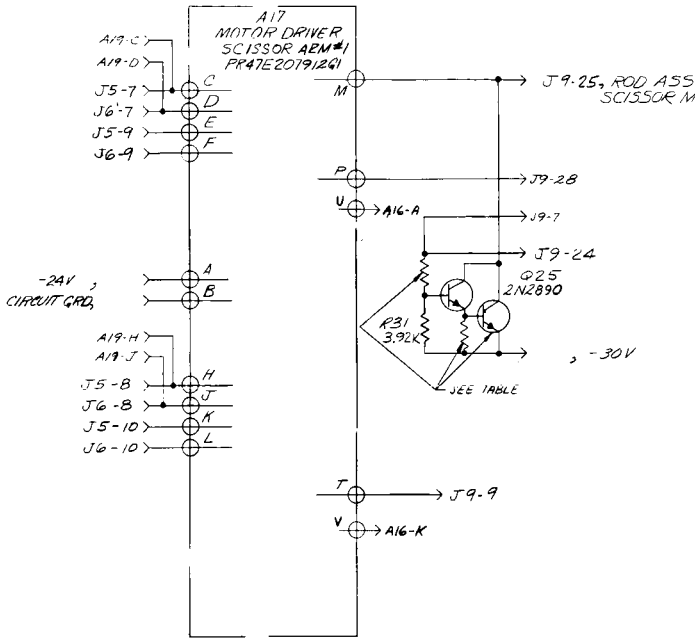
A17
MOTOR DRIVER
SCISSOR AEM#1
PR47E20791261
A19-C
A19-D
J5-7
J6-7
J5-9
J6-9
C
D
E
F
M
J9-25, ROD ASS
SCISSOR M
P
J9-28
U
A16-A
J9-7
J9-24
Q25
2N2890
R31
3.92K
, -30V
SEE TABLE
-24V ,
CIRCUIT GRD,
A
B
A19-H
A19-J
J5-8
J6-8
J5-10
J6-10
H
J
K
L
T
J9-9
V
A16-K

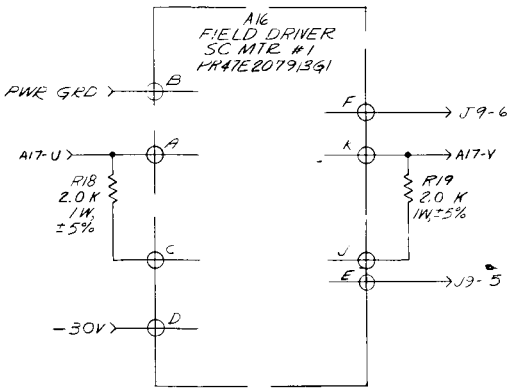
A16
FIELD DRIVER
SC MTR #1
PR47E20791361
PWR GRD
B
A17-U
A
R18
2.0 K
1W,
±5%
C
-30V
D
F
J9-6
K
A17-Y
R19
2.0 K
1W,±5%
J
E
J9-5

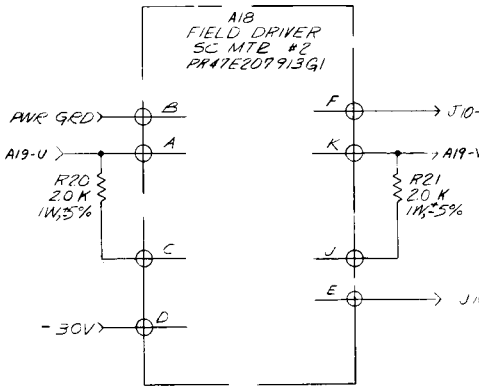
A18
FIELD DRIVER
SC MTR #2
PR47E20791361
PWR GRD
B
A19-U
A
R20
2.0 K
1W,±5%
C
-30V
D
F
K
R21
2.0 K
1W,±5%
J
E

5-11-2

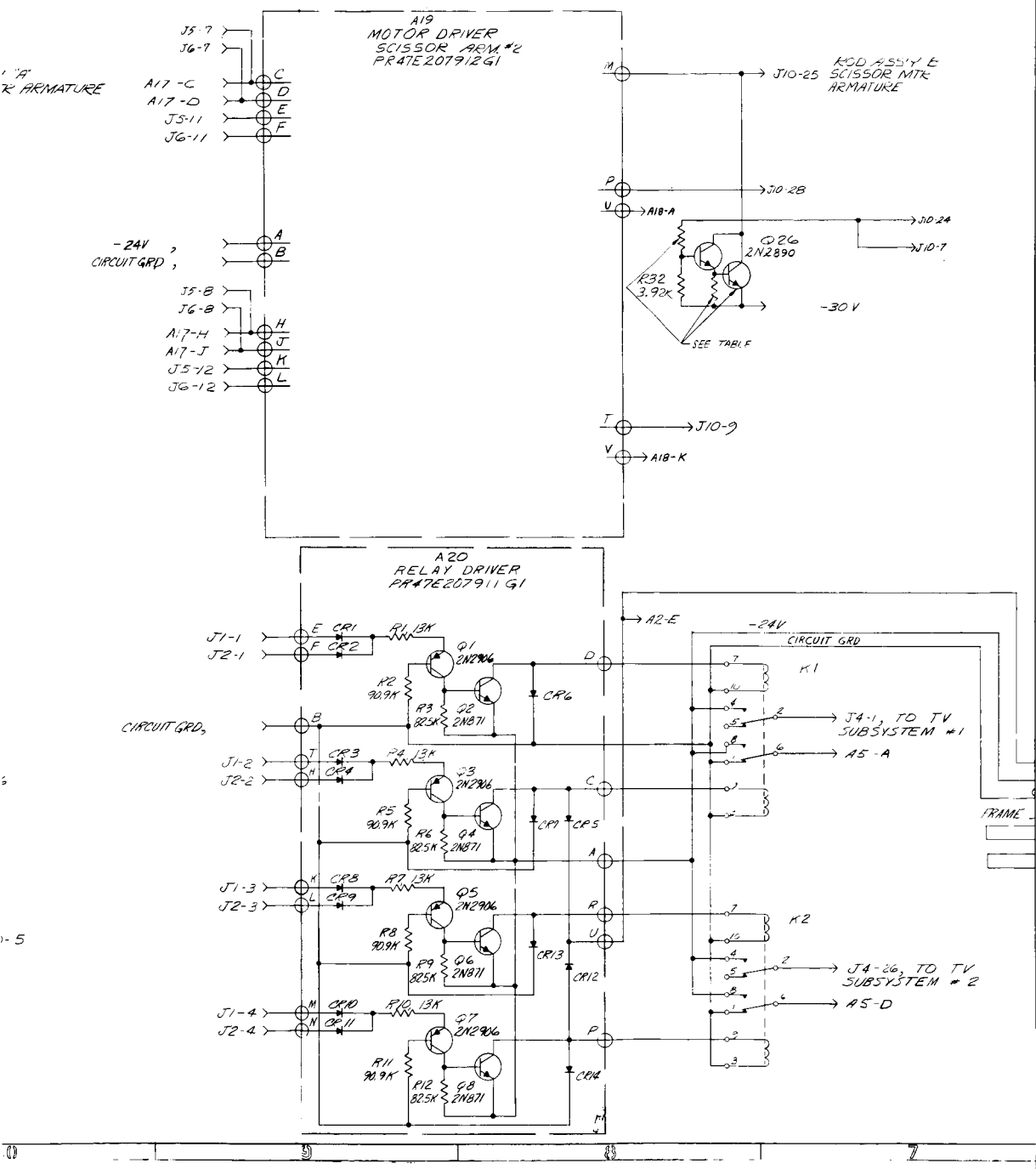
A19
MOTOR DRIVER
SCISSOR ARM #2
PR47E207912G1
J5-7
J6-7
A17-C
A17-D
J5-11
J6-11
-24V
CIRCUIT GRD
J5-8
J6-8
A17-H
A17-J
J5-12
J6-12
J10-25
ROD ASSY E
SCISSOR MTR
ARMATURE
J10-28
A18-A
J10-24
J10-7
Q26
2N2890
R32
3.92K
-30 V
SEE TABLE
J10-9
A18-K
A20
RELAY DRIVER
PR47E207911G1
A2-E
-24V
CIRCUIT GRD
J1-1
J2-1
CR1
CR2
R1 13K
Q1
2N2906
R2
90.9K
R3
825K
Q2
2N871
CR6
CIRCUIT GRD
J1-2
J2-2
CR3
CR4
R4 13K
Q3
2N2906
R5
90.9K
R6
825K
Q4
2N871
CR7
CR5
J1-3
J2-3
CR8
CR9
R7 13K
Q5
2N2906
R8
90.9K
R9
825K
Q6
2N871
CR13
CR12
J1-4
J2-4
CR10
CR11
R10 13K
Q7
2N2906
R11
90.9K
R12
825K
Q8
2N871
CR14
K1
J4-1, TO TV
SUBSYSTEM #1
A5-A
FRAME
K2
J4-26, TO TV
SUBSYSTEM #2
A5-D

5-11-3

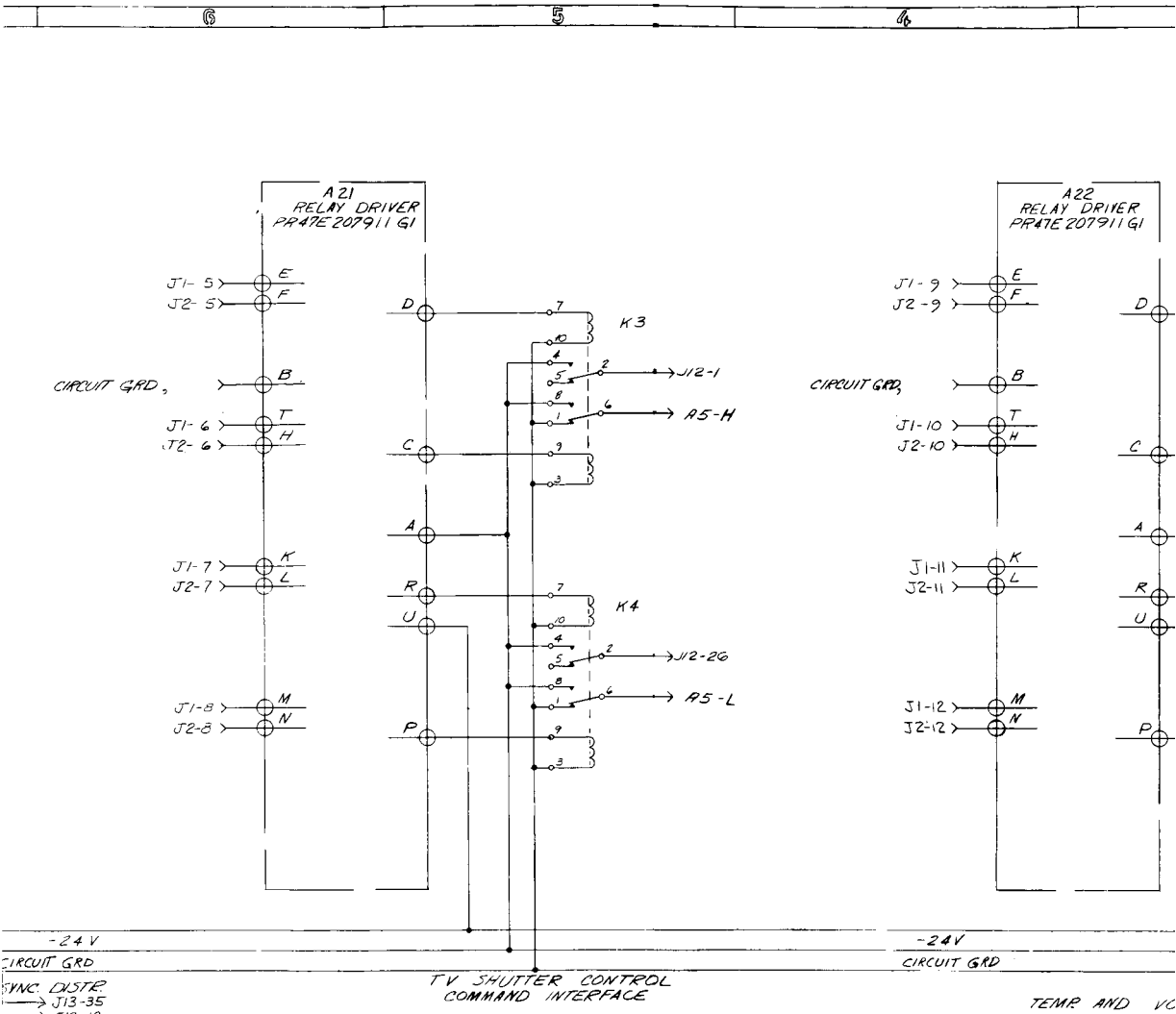
A21
RELAY DRIVER
PR47E207911 G1
A22
RELAY DRIVER
PR47E207911 G1
J1-5
J2-5
CIRCUIT GRD.
J1-6
J2-6
J1-7
J2-7
J1-8
J2-8
J1-9
J2-9
J1-10
J2-10
J1-11
J2-11
J1-12
J2-12
K3
K4
J12-1
A5-H
J12-26
A5-L
-24 V
CIRCUIT GRD
TV SHUTTER CONTROL
COMMAND INTERFACE
SYNC. DISTR.
J13-35
J12-18
J14-35
J12-24
EARTH SENSOR
OUT PUT INTERFACE
ES#1 X MEAS
ES#1 Y MEAS
ES#2 X MEAS
ES#2 Y MEAS
ROD LENGTH AND
ASSEMBLY PRESSURE
INTERFACE
J9-15 ROD ASSY A LG.
J13-1
J14-1
J10-15 ROD ASSY B LG.
J13-2
J14-2
J9-34 ROD ASSY A SC. ANGLE
J13-4
J14-4
J10-34 ROD ASSY B SC. ANGLE
J13-5
J14-5
J9-33 ROD ASSY A PRESSURE
J13-6
J14-6
J10-33 ROD ASSY B PRESSURE
J13-7
J14-7
TEMP AND

5-114

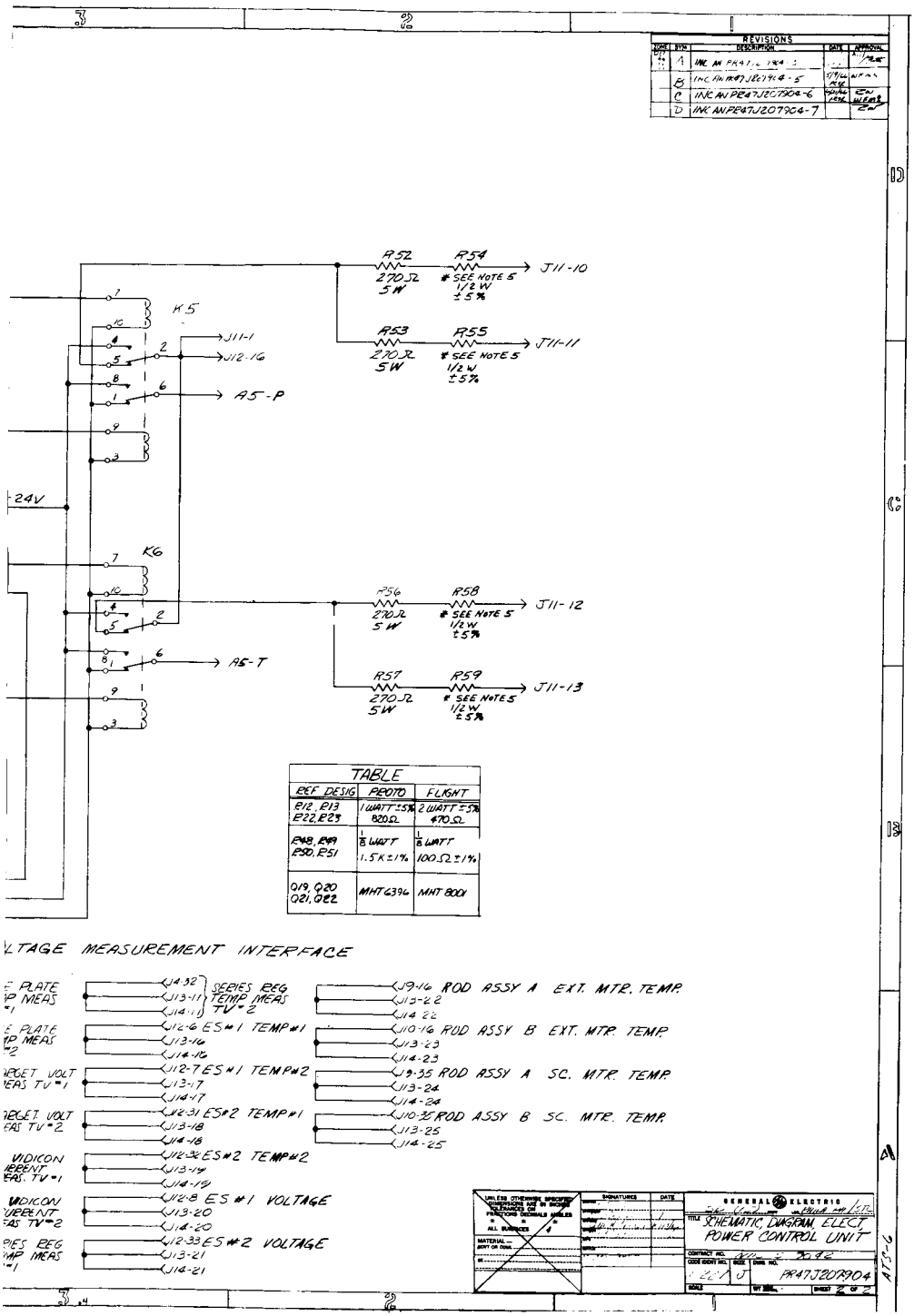

Figure 5-4. Power Control Unit Schematic (GE PR47J207904) (Sheet 2 of 2)

5.3.1 PRIMARY BOOM PYROTECHNIC UNCAGING

NASA directed GE to modify the tip mass caging system of the primary boom package to provide a positive release through the use of pyrotechnic devices. Two schemes were devised and presented to NASA at a meeting on 3 June. The details of both schemes are presented below. These early designs were superseded by the gear holder as described in Section 3.2.1.4.

a. Uncaging Approach A

This electrical modification to implement pyrotechnic uncaging of primary boom tip masses requires no modification of the HAC spacecraft harness. It does require a minor modification of the PCU. The major change would be to retrofit the Primary Boom Assembly. The motor drivers in the PCU will be utilized initially to fire the uncaging pyros, then they will be switched over to their normal function of powering their respective motor armature (when the motors are commanded On). The Power Reset Buffer in the PCU will be used to reset the relays to the proper position to fire the pyros. Besides providing the necessary function of resetting the relays with existing capability, it adds a safety feature inasmuch as the squib drivers need not be connected to a potential power source (the motor drivers) until immediately prior to firing the pyro devices.

The squib driver would be a modified version of the squib drivers now used in the PCU to fire CPD pyros.

b. Uncaging Approach B

This approach would bring power and commands necessary to actuate the pryo devices directly from the HAC equipment to the primary boom packages. The desired design would bring power and commands from separate pins of the HAC power package and decoder package connectors through a breakout of the cable to the primary boom package. Alternately, but less desirable, the HAC harness could be modified to breakout near the HAC components (Command Decoder and Payload Power Switch) and route a cable to the 50 pin connector on each boom package, breaking into the cable leading to that connector near the boom package. The squib drivers and their associated power transistors and resistors would be mounted inside of the boom package on small printed circuit boards. Squib drivers would be identical to those used in the PCU to actuate pyro devices in the CPD. Two squib drivers would be used per boom package for redundancy. Each driver would be connected to one of the two pyro bridge wires in both squibs.

5.3.2 ENGINEERING UNITS

Compatibility tests of the T-1B primary boom engineering unit and the PCU engineering unit were conducted successfully during the week of 28 March.

5.3.3 PROTOTYPE PCU

5.3.3.1 Prototype Unit 1

The Prototype No. 1 PCU (designated for qualification testing at GE) was assembled during the reporting period. A preliminary functional test was successfully performed, the unit was conformal coated, and assembled in the case. The following environmental tests were performed to qualification levels: functional test, humidity, vibration, acceleration, and thermal-vacuum. These qualification test were completed during the week of 9 May. Data taken during the tests verified that all operation was within the limits of the PCU specification, SVS-7307.

5.3.3.2 Prototype Unit 2

Acceptance testing of prototype No. 2 (S/N 5962032) PCU was completed at GE during the week of 23 May. Based upon the test results, the unit was accepted for use on the ATS qualification system and was released for shipment to HAC.

5.3.4 FLIGHT PCU UNITS

Because of the higher current requirements of the rod and scissoring motors in the primary boom package, the type MHT 6396 power transistor was changed to a type MHT 8001. Several resistors were changed in order to drive the higher powered transistor. The transistor mounting bracket on module A4 was also changed.

GE was advised by deHavilland that the motors used in the flight booms could draw up to 6.4 amps with a locked rotor under certain environmental conditions. For this reason, it was necessary to replace the 5-amp motor-driver output transistors in the PCU (Q19, Q20, Q21, and Q22) with 20-amp transistors, GE No. R-4579-2.

The first flight unit PCU was assembled and underwent in-process testing before it was conformal coated. Figure 5-5 shows this flight unit in the process of assembly.

Figure 5-5. First PCU Flight Unit During In-Process Testing

SECTION 6

GROUND TESTING

6.1 SUBSYSTEM EVALUATION TESTS

During the past quarter, component engineering testing was limited to the areas described in Sections 6.1.1 through 6.1.6.

6.1.1 PRIMARY BOOMS

The engineering units of the primary booms were used at GE for evaluating the retrofits to correct the two principal problems of element cracking and tip weight uncaging.

6.1.2 DAMPER BOOM

Engineering tests using the damper boom engineering unit has been completed.

6.1.3 TV CAMERA

The engineering units were subjected to a series of environmental tests to evaluate camera performance. A life test was started using Engineering Unit Camera S/N 5101 during the week of 6 June. The camera has accumulated over 600 hours of continuous operation with no degradation or depreciation in picture quality. It is planned to run the second engineering unit camera on a life test beginning early in July.

6.1.4 POWER CONTROL UNIT

Compatibility tests between the AGE, the PCU, and the engineering IR sensor were conducted successfully during the last week of May.

6.1.5 SOLAR ASPECT SENSOR

All scheduled testing with the use of the engineering unit SAS have been completed.

6.1.6 COMBINATION PASSIVE DAMPER

It is planned to run vibration and acceleration tests on the Engineering Unit No. 2 CPD.

6.2 QUALIFICATION TESTING

6.2.1 PARTS QUALIFICATION

6.2.1.1 Program

The Parts Qualification Program (Table 6-1) is the same as presented in the Seventh Quarterly Progress Report, with one change: the testing of 75 lamps by Lamps, Incorporated, Gardena, California, has been added as Item 18 in Group A.

6.2.1.2 Status

The status of each of the items contained in the ATS Parts Qualification Program is given below:

a. Transformer - Parts are undergoing life test. The final report is scheduled for 15 July 1966.

b. Solar Cell Assembly - Qualification is complete.

c. Solenoid - Test is complete. Analysis of data and final report is pending.

d. Cable Cutter - Qualification is complete.

e. Motors - Analysis of failed motors is proceeding. Results to date show that the two motors which failed during the life test suffered the same mode of failure, i.e., a broken brush lead wire. The cause of failure has not yet been determined. Qualification test will be started on the remaining two new motors.

f. Lamps - Life test on lamps from Chicago Miniature Lamp Works and from Lamps, Incorporated, will begin upon receipt and inspection of the lamps. Both vendors have slipped because of low manufacturing yields.

g. Linear Actuator Assembly - Qualification is complete.

h. Damper Boom Release Assembly - Test per ETP 4182-SPTP-0016, Rev. A will begin upon receipt of push rod actuators from deHavilland.

i. Transistor - Qualification is complete.

j. Relay - Evaluation is complete. Report is pending.

Table 6-1. Identification of Items in Parts Qualification Program

ITEM	PART	PART/TYPE NO.	VENDOR	WHERE USED	QUANTITY	WHERE TESTED
Group A - Parts Requiring Qualification Testing						
1	Transformer	R 4610P1	Edgerton	SAS	5	Adcole
2	Solar Cell Assembly	R 4611P1	Hoffman	SAS	5	Adcole
3	Solenoid	R 4612P1	Koontz-Wagner	CPD	6	Koontz-Wagner
5	Cable Cutter	115C7516P1 895D724P1	Holex	CPD	20	Holex
12	Motor, Brake	5398L10	Globe Ind.	Booms	2	GE-SD
13	Motor, Gearhead	5398L11	Glove Ind.	Booms	2	GE-SD
15	Lamp, Double Filament	47C207314P1	Chicage Min.	CPD	75	Chicago Min.
16	Linear Actuator Assembly	47C209587G1	Holex	Booms	18	Holex
17	Damper Boom Rel. Assy.			Booms		GE-SD
	a. Ball Lock Assemblies	47D209594G1	Avdel		36	
	b. Linear Actuator Assemblies	47C209587G1	Holex		121	
	c. Push Rod Actuator Assemblies		deHavilland		27	
18	Lamp, Double Filament	47C2073141P1	Lamps, Inc.	CPD	75	LAMPS, Inc.
Group B - Parts for Teardown and Analysis						
1	Transistor	R 4343P1	Texas Inst.	SAS	5	GE-SD
2	Relay	R 2313P12	GE	PCU	5	GE-SD

6.2.1.3 Test Plans

The following engineering test plans (ETP's) have been issued to define the testing required for the Parts Qualification Program:

ETP 4165-1, Rev. B	Lamps
ETP 4165-2, Rev. B and Rev. C.	Brake Motor
ETP 4165-3, Rev. A and Rev. B.	Gearhead Motor
ETP 4382-6	Lamps

6.2.2 COMPONENT QUALIFICATION

Test instructions have been completed for qualification and acceptance testing of five ATS components. Table 6-2 summarizes the test procedure activity during the past quarter.

Table 6-2. Qualification Test Instructions

Component	Document Available	ITPB Review	NASA Approval
Solar Aspect Sensor	1/19/66	2/ 15/66	4/20/66
Television	2/3/66	3/16/66	4/20/66
Combination Passive Damper	2/25/66	3/24/66	4/20/66
Power Control Unit	2/7/66	2/25/66	4/20/66
Damper Boom	2/14/66	3/29/66	4/20/66
Primary Boom	Estimated 7/25/66	Tentative 8/1/66	

The component qualification hardware program is summarized in Table 6-3.

Table 6-3. Qualification Program Summary

Component	Qualification Status	Problem	Remarks
PCU	Test Completed	None	Require qualification test report
Damper Boom	Test Completed	Boom tear after vibration	1- Failure analysis needed 2- Addition of double to re-inforce torn area 3- Re-vibration 4- Qual test report
CPD	Tests Completed	1- Lamp failure 2- Solenoid failure	1- See Note 1 2- See Note 2 3- Retest unit 4- Need qual test report
SAS	Tests Completed	1- Paint blistered during humidity tests 2- Line transient	1- See Note 3 2- See Note 4
TV Camera	Tests not started	-	-
Primary Booms	Tests not started	-	-

Note 1. Angle Indicator Lamp: One angle indicator lamp was found to have an open filament following vibration test. A check of the lamp indicated one filament was open and shorted to the second filament. The failed lamp will be unpotted and replaced. See further description in Section 3.

Note 2. CPD Clutch: Following thermal-vacuum test, the CPD was placed on the Low Order Force Fixture (LOFF), and it was found that the clutch could not be actuated to change from the eddy current to the hysteresis damper mode. A preliminary examination indicated that the failure was caused by brinelling of the soft pole piece material in which the V-groove is machined. The relatively hard detent balls damaged the material during vibration tests. See Section 4 for a further description.

Note 3. SAS Paint Blistering: The finish of the SAS case blistered following exposure to the humidity environment. Paint samples, to be supplied by Adcole, are to be evaluated for adhesion quality. The samples will be subjected to a humidity environment similar to that of the qualification unit.

Note 4. Transients: During the post thermal-vacuum functional test it was found that the unit was sensitive to line transients. An investigation was begun to determine the cause.

6.2.3 SYSTEM QUALIFICATION

The following tests have been performed on the system qualification components of the gravity gradient system:

a. Acceptance Test at GE

b. System compatibility tests at GE, inclduing an EMI test

c. Receiving test at HAC by GE field test personnel (the units were shipped from GE on 11 May)

d. Compatibility tests at HAC with the experimenters console performed jointly by GE and HAC test personnel. The CPD simulator compatability test was not successful, and the simulator was returned to GE for electrical modifications. It will be returned to HAC for further compatability tests.

6.3 FLIGHT ACCEPTANCE AND AGE

6.3.1 STATUS

All flight acceptance test instructions have been approved by NASA with the exception of the primary boom test procedure. This document should be complete and approved during the next reporting period.

System compatability tests of the flight hardware, with the use of the AGE at GE, is planned for August.

6.3.2 HI-POT TESTING PROCEDURE

A failure analysis was conducted as a result of the failure of six modules in the Prototype 2 Power Control Unit during Hi-pot testing. This failure was reported on pages 5-27 and 5-28 of the Seventh Quarterly Progress Report. The results of the analysis are given in the following paragraphs.

a. The voltage level for the dielectric strength test (Hi-pot) was reduced from 600 vac to 200 vac for the Power Control Unit (AN-SVS7307-1), the Combination Passive Damper (AN-SVS7314-1), and the Solar Aspect Sensor (AN-SVS7306-10). The test was retained at 600 vac for the Primary Boom System which does not contain any transistors. No Hi-pot testing is required on the Television Camera Subsystem.

b. A 100k ohm, 1-watt resistor was added, in series to the output terminals, to limit the output current of the Hi-pot tester. This resistor lacked sufficient dissipation capability which resulted in a thermal runaway problem causing the output terminal voltage to rise until the resistor failed open. The two modified testers are now being held in the instrument pool pending delivery of the proper wattage resistors.

c. Testing Standing Instruction 237, 012 specifies the use of a shorting box in paragraphs 5.1.2.1 (Megger) and 5.1.2.2 (Hi-pot) to tie the external pins together. These paragraphs have also been revised to assure a gradual increase in voltage after connection to the hardware being tested, rather than an immediate application of the maximum allowable voltage, a procedure that had previously been followed.

SECTION 7

QUALITY CONTROL

7.1 BOOM SYSTEM

A Management team including the GE Vendor Control representative has been established at deHavilland.

After a series of vibration tests of Primary Boom P-2B at GE, the unit was sent to HAC for dynamic testing. The unit has been returned to GE where it will be retrofitted to the latest configuration.

Primary Boom P-2A was returned from HAC to deHavilland for final performance test after being subjected to environmental tests at GE. Test Report 4315-QC-004 describes these tests.

The Primary Boom Acceptance Test Procedure was reviewed with NASA. Clarification and some minor changes will be made to this document as a result of the review. The qualification test procedure was also reviewed and will require complete rewriting.

Evaluation of tradeoffs between the primary boom specification and systems test requirements are now under study. This has been brought about by deHavilland's inability to meet component specification requirements of the Primary Booms.

A purchase order was received to conduct acceptance environmental test on the Flight 1 Damper Booms.

An alignment procedure, which will eliminate a series of primary boom extensions in the water tank, has been established by Product Assurance Engineering and will be reviewed with deHavilland and NASA.

7.2 COMBINATION PASSIVE DAMPER

Qualification testing of Prototype Unit 1 was stopped after completion of thermal-vacuum tests due to several failures. Failures included breaking of a lamp filament, loss of solenoid switching capability, and rotor drag (see Section 4).

A trip was made to Koontz-Wagner to witness teardown of the failed solenoid. It was found that the sides of the detent groove were severely mushroomed by the detent balls.

Failure Analysis Report 191-E-5 pertaining to the above and a squib firing difficulty outlined below has been issued. This report established 13 action items that are now under investigation.

A squib, which did not fire during the first uncaging of Prototype 1, was successfully fired at minimum current after locating a test rack defect. The test console was modified to simplify the firing sequence.

In order to eliminate test equipment problems in the CPD test area several steps have been taken:

a. Thermal ovens are being modified to prevent flaking of maronite panels. This flaking was disturbing air bearing operation.

b. Float valves have been purchased for air bearing manometers.

c. Thermal box was modified to provide dry GN_2 purge at all times which will prevent the heat exchanger from frosting while attempting to reach low temperature.

A calibration constant for the Advanced Damping Test Fixture (ADTF) was generated.

Calibration Procedure C-103 for the Low Order Force Fixture (LOFF) was completed and issued.

A test on the angle indicator lamps was conducted with the use of the Power Control Unit. This test indicated that the lamp voltage ranged within acceptable limits.

Drawing 47A210389 specifying the ATS-CPD cleanliness requirements was issued and is now incorporated into quality control inspection procedures.

A test plan for Engineering Unit 2 was issued. Data derived from these tests will be used to supplement qualification test data for ATS-D and E flight units.

A trip was made to Los Angeles Miniature Products where 20 angle indicator lamps were inspected. Eleven lamps were accepted. The nine rejects were of a random nature although their general appearance was of a higher quality than those manufactured by Chicago Miniature.

After considerable manufacturing difficulty, the angle indicator lamp assembly, along with torsional restraint magnets, were successfully tested. These parts will be used in the Flight 1 CPD.

Koontz-Wagner completed their parts qualification test program and assembled four flight solenoids. All four units were accepted by the QC Vendor Surveillance Inspector. In addition, two encoder discs were accepted by Surveillance Inspection during this period.

7.3 TELEVISION CAMERA SYSTEM

Component test activity included a solar vacuum test performed on TVCS Engineering Unit 2 and monitoring life tests on Engineering Unit 1.

Corrective action to Failure Analysis 190-E-4 showed that the sun shutter "close" circuit is not sensitive to light levels as low as 9 milliwatts per sq cm (the light level of the earth albedo).

A test equipment request was generated to provide additional test equipment in order to test two TV camera systems at the same time.

Quality Control and Design Engineering visited Lear-Siegler (TVCS vendor) to witness in-process testing of Prototype and Flight 1 cameras, to complete evaluation of testing to ensure that the cameras will be set up for the scenes that are expected to be viewed in orbit, and to perform surveillance inspection of several parts to be used on flight equipment.

A trip was made to Wollensak (the Lens Assembly vendor) to discuss the quality problems pertaining to the lens assembly. A summary of the findings indicated that Wollensak is getting poor quality parts, (shutter assembly, meter movement and blades) from Ammon Industries (their vendor). As a result, Wollensak agreed to establish surveillance inspection at Ammon in an effort to resolve their quality problems.

Thermal-vacuum tests to determine the acceptability of applying copper gold-plating over cadmium plating on Bendix connectors used on the TVCS were successfully conducted at GE. This process is now considered acceptable.

7.4 SOLAR ASPECT SENSOR

Qualification testing of the Solar Aspect Sensor was completed. A full qualification test report will be issued in the near future.

Failure Analysis Report 192-E-6 pertaining to insulation resistance and dielectric strength test problems was issued. Corrective actions include the addition of a shorting box, revised test instructions and reducing the Hi-Pot test from 600 vac to 200 vac (see Section 6).

Surveillance inspection activity consisted of a trip to Adcole where the Flight 2 Solar Aspect Sensor was accepted.

7.5 POWER CONTROL UNIT

In-process testing of Flight 1 PCU was completed. Acceptance testing of the finished unit is now in progress.

Supplement to Failure Analysis 183-E-1 outlining the corrective action on Hi-Pot and Megger test failures was issued. This report is now considered complete.

Failure Analysis Report 186-E-3 pertaining to test problems on the PCU at Hughes Aircraft was issued. It was determined that module failures were caused by an overpowering of various transistors within the unit. As a result, the PCU breakout boxes at GE and HAC were reworked to eliminate the condition.

QC Engineering Test Report 4315-QC-002 was issued pertaining to the acceptance test of Prototype 2 after rework.

A trip was made to Sibley Corporation where 19 out of 24 printed circuit boards were accepted by Surveillance Inspection. The 5 remaining units were rejected for wrong identification markings.

7.6 SYSTEMS TEST

Compatibility tests between GE Prototype System and HAC Experimental Package Console (EPC) were completed. All irregularities were noted and corrected.

7.7 PARTS QUALIFICATION

Primary boom motors were subjected to acceleration and vibration testing. Upon completion, the units were submitted for life testing. Testing was discontinued due to motor problems. A trip was made to Globe Motors by a GE Failure Analysis representative to discuss the failure.

Failure Analysis Report 193-E-7 has been issued. This report established six corrective action items that are now under investigation.

Thirty damper boom actuator brackets were received from deHavilland. These units will now be subjected to Parts Qualification tests.

7.8 GENERAL

Spacecraft Equipment Log (operating test times) has been incorporated into all ATS Standing Instructions per QCOP 16.2.

Product Conformance Audit 155 was conducted which pertains to configuration and design change control applicable to the ATS Program. The results were published and corrective action was taken.

A formal "Buy-Off" procedure outlining the method for submission of completed ATS hardware to Government Inspection for final "buy-off" was issued.

In order to avoid damage during mating and demating, protective connectors for ATS flight components have been fabricated and will be placed on the components prior to the test. The component Standing Instruction (SI) will be changed accordingly.

SECTION 8

MATERIALS AND PROCESSES

This section contains a report of materials investigations that were completed during the period in support of ATS hardware. A complete discussion of materials efforts will be found in the Materials Report No. 4 to be published at the end of July 1966. This report will cover the period from January through June 1966.

8.1 PRIMARY BOOMS

Specification 171A4400, "Paint, Epoxy, Thermal Control, Flat Black" was rewritten to include Finch Paint and Chemical Company's CAT-A-LAC463-3-8 black epoxy over 463-12-1A primer. This is an improved version of the CAT-A-LAC463-1-8 over 454-1-1, the previously used materials. The new material met the specification values for absorptance, emittance, and adhesion, and approval was given to deHavilland to use this material for the boom packages.

A boom drive assembly was held at $100^{\circ}F$ for 24 hours in a pressure of 1×10^{-6} to 1×10^{-5} torr. Two sodium chloride discs maintained at -100 to $-30^{\circ}F$ were placed 1-1/2-inches from the primary boom exit ports. At the end of the test, one disc had increased in weight by 5.5 milligrams; the other weighed 0.5 milligrams more. Infrared analysis identified the material on the disc as chlorophenyl methyl polysiloxane, the oil in Versilube G300 grease which is used in the boom drive gear box and some unidentified organic material. Oil was also found on the cooled holders for the discs, but there was no oil on the drive assembly. The outgassed material is not considered sufficient to contaminate or cause malfunction of a vacuum chamber.

Boom drive assembly, T-1B-003, was held at a temperature between 135 to 145°F in a vacuum of 6×10^{-4} to 2×10^{-3} torr and leaked checked using a CEC Model 24-120 mass spectrometer. No helium leakage was detected before or after vibration testing. For these tests the sensitivity was less than 1×10^{-5} cc/second.

8.2 COMBINATION PASSIVE DAMPER

Specification 171A4441 was prepared on the application of Alodine 1500. This material is used to give a reflective surface on the angle indicator lamp holders.

8.3 TV CAMERA

Approval was given to Lear-Siegler to overplate the presently cadmium plated connectors with 0.0002 to 0.0003 inch copper and 0.0001 inch gold per MIL-G-45204, Type II, Class 2. The zinc chromate will be removed from those connectors that have it.

A connector plated with copper and gold was held at 150°F and 2×10^{-7} torr for ten days. There was no change in transmission properties of a sodium chloride disc placed two inches from the connector and maintained at 70°F. There was a slight hazing on the disc due to loss of cadmium from an area which had not been plated. This indicates the necessity of inspection to ensure complete coverage.

Contamination on a TV camera window was identified as Dow Corning DC4 silicone grease used by the manufacturer, Lear-Siegler, in installation of O-rings. Lear-Siegler will eliminate the use of this material.

SECTION 9

MANUFACTURING

Full time technical support was provided by the Manufacturing operation during assembly of the Gravity Gradient Stabilization. Assembly of the engineering units was completed with the exception of Engineering Unit 2 which was delayed pending installation of the redesigned angle indicator encoder disc.

The following status is reported for the prototype and flight components:

a. Prototype 1

PCU - Fabrication complete. Qualification testing is complete.

SAS - Fabrication complete. Awaiting qualification tests.

TV Camera - Return to vendor for design up-date.

Damper Boom - Received from deHavilland. Returned to vendor for rework.

Primary Boom - Still at deHavilland.

CPD - Fabrication complete.

b. Prototype 2 - Fabrication of all components completed.

c. Flight Units - Manufacture of the major mechanical parts are complete. Delivery of electrical parts is complete. Modules are complete for Flights 1 and 2. Flight No. 3 is 85% complete.

d. AGE - One unit was delivered to Hughes Aircraft during the quarter.

e. Test Equipment - Some changes are being made, and parts are reworked accordingly.

SECTION 10

RELIABILITY, PARTS AND STANDARDS

10.1 ATS GRAVITY GRADIENT ORBIT TEST SEQUENCE METHOD

This discussion seeks to establish a method for developing an efficient test sequence for the Gravity Gradient Subsystem experiments. The measure of effectiveness to be considered will include the risk (possible loss of stabilization and test information) associated with each experimental sequence and the importance of the information gathered. In addition, external constraints such as orbital requirements and prerequisite data acquisition will be factored into the sequence determination.

Assumptions made in carrying out the analysis were:

a. The Gravity Gradient Experiments described in Table 10-2 in ATS Systems Memo No. 068, "ATS Gravity Gradient Orbit Test Philosophy", proposed by GE.

b. The Gravity Gradient Experiments 1 to 11 and 13 in Table 10-1 comprise the Gravity Gradient Orbit Test. They will take place during the first 6 months of the satellite's orbital life. Experiment No. 1, Initial Capture, must be accomplished first.

c. In performing the evaluation of the experimental sequence, the risk introduced by instrumentation failures has been deleted due to the redundancies that exist in the instrumentation. The TV cameras provide the most significant instrumentation risk during the GGS experiments. However, in their role as boom monitors, the TV cameras are essentially redundant. Boom data will be taken during most of the early tests to reduce the risk of losing this data should the cameras fail before the thermal bending experiment (No. 9). When the earth pointing TV camera is used for attitude sensing, redundancy exists with other attitude sensing instrumentation.

10.2 ANALYSIS OF SPECIFIED SEQUENCE

10.2.1 IMPORTANCE RANKING

In order to quantify the measure of effectiveness, it was initially required that the relative importance of each experiment be determined in terms of the value of the test information to be obtained. To do this, each experiment was ranked giving the results shown in Table 10-1.

This was a somewhat subjective but necessary first step since some concept of the relative importance of the objectives is needed to intelligently evaluate the worth of any sequence selected.

Table 10-1. Experiment Importance

Expt. No.	Description of Experiment	Ranking Importance
1	Initial Capture	∞
2	Steady State Performance (sun out of orbit plane)	20
3	Eddy Current Damper (ECD) Settling Time	9
4	Passive Hysteresis Damper (PHD) Settling Time	9
5	Steady State Performance (sun in orbit plane)	8
6	Yaw Inversion by Subliming Rocket Pitch Displacement	2
7	Pitch Inversion using Subliming Rockets	6.5
8	Sensitivity - Moment of Inertia Ratio	5
9	Thermal Bending Measurements (continuous sunlight)	8
10	Sensitivity - Moment of Inertia Magnitudes	4
11	Pitch Inversion by Boom Retraction and Re-extension	7
13	Primary Boom System Failure Mode Simulation	1

10.2.2 RISK DETERMINATION

The risks associated with each experimental sequence are determined by evaluating the effect of an equipment failure during an experiment on the importance loss for that experiment and for all subsequent experiments requiring the failed item.

The evaluation of risk, therefore, requires a tentative experimental sequence and the determination of the configuration associated with each experiment. The probability of failure (Q) of each equipment during the experiment is evaluated using familiar reliability techniques. The effect (E) the failure would produce (in terms of importance lost during the experiment and for all subsequent experiments) is then determined in terms of the importance ranking numbers. This number represents a quantification of the failure effect for the Gravity Gradient Test.

Once the probability of failure (Q) and failure effect (E) are determined, an estimate of the risk associated with each trial sequence can be established by taking the product of these two quantities (QE). By summing the risks for each of the equipments involved in an experiment, an overall experiment risk can be arrived at which is dependent upon the position of the experiment in the sequence. This definition of risk corresponds to the concept of criticality generally used in reliability analyses.

To illustrate the determination of risk, Table 10-2 was prepared for the test sequence originally proposed. An example of (E) determination for a PHD failure during Experiment 2 (refer to Table 10-2) is given: | If the PHD failed during Experiment 2, one-half of Experiment 2 would be lost along with all of Experiment 4, one-half of Experiment 5, one-quarter of Experiment 8, and one-quarter of Experiment 10. Equating this to the importance rankings would yield:

$$\frac{20}{2} + 9 + \frac{8}{2} + \frac{5}{4} + \frac{4}{4} = 25.$$

Once the (E's) are determined for each experiment, they are multiplied by the probabilities of failure (Q's) and summed by experiment. These totals are indicated in the Σ QE columns of Table 10-2.

10.2.3 EFFECTIVENESS MEASURE

Having obtained an importance ranking and risk measure for each experiment, it remains to determine an expression that rationally combines these two numbers into a measure of the sequence effectiveness. The most direct relationship is:

$$\text{Sequence Effectiveness} = \sum_{i=2}^{12} \left({}^{I}i/R_i\right)$$

This formula states that the most effective sequence will obtain the maximum amount of important information with the minimum risk of losing test capability. As can be seen in Table 10-2, the Sequence Effectiveness of the specified sequence is 27016.

Table 10-2. Specified Sequence-Effectiveness Determination

Expt. Seq. No.	Expt. Parameter	TEST CONFIGURATION: Primary Booms: Pair A Ext.	Pair A Scissor	Pair B Ext.	Pair B Scissor	Damping Subsystem: Boom	Type: ECD	PHD	Clutch	Subl. Rockets	Effectiveness Measure: Risk = ΣQE	I	$\Sigma = {}^{1}/\Sigma QE$
1	Q E Q E	MANDATORY											
2	Q E Q E	X	X	X	X	X	0.00000 0	0.00006 25 0.00150	0.0014 35 0.00490	X	0.00640	20	3125
3	Q E Q E	X	X	X	X	X	0.00000 0	X	0.00007 15 0.00105	0.0001 345 0.00345	0.00450	9	2000
4	Q E Q E	X	X	X	X	X	X 0	0.00006 15 0.00090	X	0.0001 25.5 0.00255	0.00345	9	2608
5	Q E Q E	X	X	X	X	X	0.00000 0	0.00006 6 0.00036	0.00007 35.5 0.00248	X	0.00284	8	2820
6	Q E Q E	X	X	X	X	X	0.00000 0	X	X	0.0001 16.5 0.00165	0.00165	2	1212
7	Q E Q E	X	X	X	X	X	0.00000 0	X	X	0.0001 14.5 0.00145	0.00145	6.5	4480
8	Q E Q E	X	X	X	X	X	0.00000 0	0.00006 2 0.00012	0.00056 13 0.00728	X	0.00740	5	675
9	Q E Q E	X	X	X	X	X	0.0000 0	X	X	0.0001 8 0.0008	0.008	8	10000
10	Q E Q E	0.0272 12 0.3264	X	0.0272 11 0.2992	X	X	0.0000 0	0.00006 0.00106 0.00006	0.00035 0.00535 0.00175	X X	.6274	4	6.4
11	Q E Q E	0.0272 8 0.2176	X	0.0272 7 0.1904	X	X	0.0000 0	0.00006 X	0.00175 X	X	.4080	7	17.2
13	Q E Q E	0.0137 1 0.0137	0.00005 1 0.00005	X	0.00005 1 0.00005	X	0.0000 X 0	X	X	X	0.0138	1	72.5

$\Sigma = 27016$

10.3 ANALYSIS OF AN ALTERNATIVE SEQUENCE

10.3.1 FACTORS TO BE CONSIDERED IN DEVELOPING AN ALTERNATE SEQUENCE

In selecting an alternate sequence for comparison with the one specified, a number of factors must be considered. These are:

a. Orbital Constraints

1. Experiment 2 should be conducted immediately after initial capture (Experiment 1).

2. Experiment 5 should be conducted between days 30 and 45. (For the orbit conditions assumed in ATS Systems Memo No. 068.)

3. Experiment 9 should be conducted between days 88 and 126. (For the orbit conditions assumed in ATS Systems Memo No. 068.)

b. Operational Uncertainties

The use of the subliming rockets for effecting satellite inversion will (in part) be empirically established during the test program. If test 7 precedes tests 3, 4, and 6, the lack of previous information on this maneuver will introduce a measure of operational uncertainty or risk not relating to the hardware reliability.

c. Simplification of Operations

The sequencing of experiments can be chosen to minimize the need for equipment operation between experiments. As an example, if experiments using the same type of damping (ECD or PHD) are conducted sequentially, fewer clutching operations will be required during the test.

d. Prerequisite Data

The following relative order of experiments must be maintained to assure that prerequisite data is available to perform the experiments:

Experiments	3 & 4 precede 6
	3, 4, and 6 precede 7
	6 precedes 9
	10 precedes 11
	11 precedes 13.

e. Experiment Performance Times

All experimental sequences must provide for the approximate experiment durations indicated in Table 10-3 and still meet the orbital constraints in paragraph a above.

Table 10-3. Experiment Durations

Expt. No.	Approx. Duration (days)	Expt. No.	Approx. Duration (days)
2	4	7	8
3	3	8	36
4	20	9	33
5	8	10	31
6	12	11	8
-	-	13	5

10.3.2 CANDIDATE SEQUENCE

a. Fixed Locations

In general, if no restraints existed, there would be 11! or 39,916,800 ways of arranging the experiments. Fortunately, the restrictions indicated in Section 10.3.1 and the information developed in evaluating the initial sequence specified (Table 10-2) reduce this number of choices to a workable level.

1. Experiment 2 will be conducted immediately after initial capture.

2. Experiments 10, 11 and 13 because of their inherent risk, regardless of sequencing, will be conducted last. Since Experiment 10 must precede 11 and 13, its location in the sequence is also determined.

b. Available Sequence

Based on the fixed locations described above and the restraints indicated in 10.3.1 Table 10-4 was prepared to depict the available sequencing possibilities.

c. Alternate Sequence Selected

Based on Table 10-4 and an examination of Table 10-2, the sequence selected for comparison is: Experiments 2, 4, 5, 3, 6, 8, 9, 7, 10, 11, and 13.

1. By revising the sequence of Experiments 3, 4, 5 to 4, 5, 3, one clutching operation can be deleted leading to a reduced risk. Experiment 5 can still be conducted within the allowable orbital time span.

2. Experiments 6, 7, and 9 involve only the subliming rockets and ECD. Arranging these in the order of importance would yield 9, 7, and 6. Restrictions contained in paragraph 10.3.1.d, however, require that 6 precede 9; therefore, 6, 9 and 7 is the sequence chosen. Experiment 8 takes approximately 36 days to perform and therefore must precede Experiment 9 since sufficient time is not available between Experiments 9 and 10. The pitch inversion Experiment 7 involving the subliming rockets and attendant operational uncertainties is now less of an operational risk.

Table 10-4. Sequencing Possibilities

Sequence	1	2	3	4	5	6	7	8	9	10	11
Fixed Expt. No.	2	-	-	-	-	-	-	-	10	11	13
Mission Time (days)	5-9	10-						-135	136-167	168-175	176-180
Candidate Experiment		3,4 8	3,4 5,8	3,4,5, 6,8	3,4 6,7,8	3,4,6, 7,8	7,8 9	7,8, 9			
Justification	10.3.2.a	10.3.1d	10.3.1.a 10.3.1.d								

10.3.3 EFFECTIVENESS DETERMINATION FOR ALTERNATE SEQUENCE

Table 10-5 presents the results of the effectiveness analysis for the alternate sequence. The results of the analysis indicate an effectiveness measure of 35581 which is considerably greater (35581 vs 27016) than the original sequence.

10.4 CONCLUSIONS AND RECOMMENDATIONS

a. The alternate experimental sequence should be reviewed for consistency with original test objectives and considered for use.

b. The original experimental sequence was very close to the alternate sequence derived using the importance and risk quantification. This supports the assumption that these two factors were prime intuitive considerations.

c. The application of the method of sequencing can be easily adapted to a computer evaluation. For reasonably sized tests, with an average number of constraints, the permissible test sequence can readily be considered and the failure mode and effect analysis can be automated.

Table 10-5. Alternate Sequence-Effectivemess Determination

Expt. Seq. No.	Expt. Parameter	TEST CONFIGURATION									Effectiveness Measure		
		Primary Booms				Damping Subsystem				Subl. Rockets	Risk = ΣQE	I	$\Sigma = {}^{I}/\Sigma QE$
		Pair A		Pair B		Boom	Type		Clutch				
		Ext.	Scissor	Ext.	Scissor		ECD	PHD					
1	Q E Q E			MANDATORY									
2	Q E Q E	X	X	X	X	X	0.0000	0.00006 25 0.00150	0.00007 25 0.00175	X	0.00325	20	6150
4	Q E Q E	X	X	X	X	X	X	0.00006 15 0.00090	X	0.0001 34.5 0.00345	0.00435	9	2065
5	Q E Q E	X	X	X	X	X	0.0000 0	0.00006 6 0.00036	0.00007 44.5 0.00312	X	0.00348	8	2300
3	Q E Q E	X	X	X	X	X	0.0000 0	X	X	0.00011 25.5 0.00255	0.00255	9	3530
6	Q E Q E	X	X	X	X	X	0.0000 0	X	X	0.0001 16.5 0.00165	0.00165	2	1212
8	Q E Q E	X	0.000175 6 0.00105	X	0.000175 6 0.00105	X	0.0000 0	0.00006 2 0.00012	0.00056 15 0.00840	X	0.01062	5	4708
9	Q E Q E	X	X	X	X	X	0.0000 0	X	X	0.0001 14.5 0.00145	0.00145	8	5520
7	Q E Q E	X	X	X	X	X	0.0000 0	X	X	0.0001 6.5 0.00065	0.00065	6.5	10000
10	Q E Q E	0.0272 12 0.3264	X	0.0272 11 0.2992	X	X	0.0000 0	0.00006 1 0.00006	0.00035 5 0.00175	X	0.6274	4	6.4
11	Q E Q E	0.0272 8 0.2176	X	0.0272 7 0.1904	X	X	0.0000 0	X	X	X	0.4080	7	17.2
13	Q E Q E	0.0137 1 0.0137	0.00005 1 0.00005	X	0.00005 1 0.00005	X	0.0000 0	X	X	X	0.0138	1	72.5

Sequence = 35581

10.5 PARTS AND STANDARDS

10.5.1 PARTS PROCUREMENT

Problems in the procurement of parts have continued at a reduced level. Shortages have been created by (a) vendor slippage, such as lot rejections, low yields, etc., (b) design changes, such as changed values of parts, added parts, etc., and (c) production errors, such as parts damaged in manufacturing or test.

The only shortages of flight hardware that are identified at present are phototransistors (R4615-1) from Texas Instruments and backup lamps from Los Angeles Miniature Products (Lamps), Inc.

10.5.2 PARTS DRAWINGS AND PARTS LISTS

The following GE drawing was revised and updated during the reporting period, and the indicated revision was issued:

R4583, Rev. C Semiconductors, Transistors

In addition, the referenced HAC drawings were updated, and the following Parts List was issued:

490L106, Rev. F Approved Parts List for Project ATS.

10.5.3 PARTS QUALIFICATION PROGRAM

Details of parts qualification are presented in Section 6.2.1.

10.5.4 DEGRADATION ANALYSIS

The analysis of data from extended power aging tests has been completed for all parts except one lot of R4583-1 transistors which have not yet been received, and R4582-1 dual transistors for which the test data are in question and awaiting resolution.

10.5.5 FAILURE ANALYSIS

Support is being provided in the analysis of failures as required. Particular failures to date have been motors, Sprague 1500 capacitors, Bourns potentiometers, and R4583-2, R4585-1, R4602-1, and 2N828 transistors.

SECTION 11

NEW TECHNOLOGIES

There are no new technologies to report for the quarter. Efforts to monitor the analytical and developmental areas will continue, and resulting new technologies will be reported in future reports.

SECTION 12

GLOSSARY

The following is a list of abbreviations and definitions for terms used throughout this report:

ADTF	Advanced Damping Test Fixture (used for CPD testing)
ATS-A	Medium Altitude Gravity Gradient Experiment (6000-nautical mile orbit flight)
ATS-D/E	Synchronous Altitude Gravity Gradient Experiment (24-hour orbit flight)
CPD	Combination Passive Damper
Crab Angle	Out-of-orbit angle flight caused by changes in X-rod angle
DME	Dynamic Mission Equivalent (Accelerated Functional Program)
GE-MSD	General Electric Company Missile and Space Division
GGS/ATS	Gravity Gradient System/Applications Technology Satellite
HAC	Hughes Aircraft Company
ITPB	Integrated Test Program Board
Local Vertical	Imaginary line extending from the satellite center of mass to the center of mass of the earth
LOFF	Low Order Force Fixture (used for CPD testing)
MTBF	Mean Time Before Failure
MTTF	Mean Time to Failure
PCU	Power Control Unit
PIR	Program Information Request/Release, GE documentation
SAS	Solar Aspect Sensor
Scissoring	Changing the angle included between the primary booms in a manner that maintains a symmetrical configuration about the satellite yaw axis
STEM	Storable Tubular Extendable Member
Stiction Torque	That amount of torque required to overcome the initial effects of friction
SVA Fixture	Shock and Vibration Attachment Fixture
Thermal Twang	Sudden thermal bending which the booms experience in passing from a region of total eclipse into a region of continuous sunlight or vice versa
TR	Torsional restraint
TVCS	TV Camera Subsystem