https://ntrs.nasa.gov/search.jsp?R=19660028235 2018-07-24T13:39:42+00:00Z

U of Iowa 65-26

[redacted]

THE UNIVERSITY OF IOWA FOUNDED 1847

FACILITY FORM 602

N66 37525
(ACCESSION NUMBER)

(THRU)

41
(PAGES)

1
(CODE)

CR-78403
(NASA CR OR TMX OR AD NUMBER)

13
(CATEGORY)

GPO PRICE $

CFSTI PRICE(S) $

Hard copy (HC)

Microfiche (MF)

ff 653 July 65

Department of Physics and Astronomy

THE UNIVERSITY OF IOWA

Iowa City, Iowa

U. of Iowa 65-26

Influence of the Earth's Rotation upon the Interaction of the Solar Wind with the Magnetosphere *

by

Edward W. Hones, Jr.**

Department of Physics and Astronomy
University of Iowa
Iowa City, Iowa

July 1965

*This work was supported in part by the National Aeronautics and Space Administration under grant NsG-233-62.

**On leave of absence from the Institute for Defense Analyses, Arlington, Virginia.

ABSTRACT

Mapping of electric potentials derived from the high-latitude SD current system into a reasonable model of the magnetosphere reveals a pattern of plasma convection which, at first glance, might be regarded as driven by the earth's rotation. However, more careful analysis shows that the convective motion is faster, by a factor of five or ten, than that which would be driven by the earth. This paper describes experiments, conducted with objects in water, which demonstrate that circulation established by bodies rotating in a viscous fluid may be modified and its velocity enhanced if the fluid is streaming past the bodies. The additional circulation energy is derived from reorientation of the stream flow near the bodies. These demonstrations suggest that the earth's rotation plays a much more vital role in coupling the solar wind's energy into the magnetosphere than previous theories have ascribed to it. It appears that the earth's rotation does, indeed, set the basic pattern of plasma convection in the magnetosphere. Thermalized solar wind plasma, expanding away from the stagnation region at the front of the magnetosphere, streams into and through the magnetosphere, following this basic pattern around the earth and augmenting the plasma flow there many-fold. This stream of

solar wind plasma behaves rather like the plasma in a magneto-hydrodynamic generator, its polarization electric field driving ionospheric currents at the base of those magnetic field lines past which the plasma flows. It is suggested that this is the source of the DS current system and that one can, therefore, look upon the DS currents as "tracers" of the path of the solar wind plasma through the magnetosphere. A number of geophysical effects can be attributed to the presence of the plasma stream. The currents in it, caused by the magnetic drifts of its particles, probably contribute to a ring current. In the outer region of the stream, where the magnetic field of the earth is weak, the currents become concentrated in a current sheet near the earth's magnetic equatorial plane, the phenomenon recently discovered with the IMP satellite. The plasma stream perturbs the magnetic field through which it passes to such an extent that energetic particles cannot be trapped, but diffuse readily through these regions. Thus the inner edge of the plasma stream establishes the low-latitude boundary for the entry of few-MeV solar protons and the high-latitude boundary for the trapped radiation. It may be possible to determine, qualitatively, the influence of the earth's rotation by appropriate experiments with a rotating terrella in the laboratory.

I. INTRODUCTION

The mechanism whereby energy of the solar wind is introduced into the interior of the earth's magnetosphere is not known though there seems little doubt that energy derived from the solar wind is, somehow, responsible for auroral phenomena, for generation of most of the high-energy trapped radiation, etc. Two theories advanced in recent years attempting to explain the coupling of solar wind energy into the magnetosphere are those of Axford and Hines [1961] and of Levy et al. [1963]. The former theory supposes a viscous interaction between the solar wind and the magnetosphere's surface which produces a "counterflow" in the tail of the magnetosphere, pulling solar-wind plasma forward into the proximity of the earth. The theory of Levy et al. visualizes a similar flow forward through the tail, but ascribes it to a different mechanism--continual connection and disruption of the high-latitude magnetic lines of force.

This paper presents yet another theory to account for the energy-coupling mechanism. It suggests that (a) thermalized solar wind plasma flows directly into the forward portion of the magnetosphere, probably on the afternoon side of the sub-solar

region; (b) the earth's rotation is the factor which causes the plasma's entry and which largely determines where the entry will take place; and (c) to a large extent, the course that the plasma will follow as it forces its way through the magnetosphere is established by the earth's rotation. The theory is deduced from the electric field configuration in a model of the magnetosphere and from simple demonstrations of the behavior of a stream of viscous fluid as it flows past rotating bodies.

Figure 1 shows the equatorial plane of a model of the magnetosphere presented recently by Taylor and Hones [1965]. The electric field whose equipotentials are shown was derived from the SD current system at high latitudes as portrayed by Silsbee and Vestine [1942]. The magnetic field lines in the model were regarded as electric equipotentials to project the electric field outward from the ionosphere, where the currents flow, into the equatorial plane. Figure 2 shows the electric equipotentials at the north magnetic polar cap of the earth. The principal concern, in this paper, with reference to Figure 1 and Figure 2 is the direction and magnitude of the electric drift ($\bar{v}_E = c \frac{\bar{E} \times \bar{B}}{B^2}$) of charged particles which one deduces from them. $\bar{v}_E$ may be regarded as the velocity of a convective motion of the low energy plasma in the magnetosphere. This is

true regardless of whether the electric field is externally applied and the plasma is moving in response to it or whether the plasma is forcing its way (due to its kinetic pressure) through the magnetic field and is polarized in the process. In either case, $\bar{v}_E$ is an indicator of the plasma's motion through the magnetic field. Now, referring to Figure 1, and remembering that $\bar{B}$ is directed out of the paper, we find that $\bar{v}_E$ carries plasma counterclockwise around the earth in the forward part of the magnetosphere and clockwise around the high potential axis in the tail. This motion has the general character which would be expected of a plasma convection pattern driven by the earth rotating in its distorted magnetosphere. (See, for example, Johnson [1960].) But, consider the magnitude of $\bar{v}_E$. For example, on the midnight meridian at about 8 earth radii (R_E) we find an electric field strength of about

$$|\bar{E}| = \frac{10^4 \text{ volts}}{1 \ R_E} = \frac{10^4 \text{ volts}}{6.4 \times 10^8 \text{ cm}} = 1.6 \times 10^{-5} \text{ volt/cm}$$

$$\approx 5 \times 10^{-8} \text{ statvolt/cm} .$$

Taking $\bar{B}$ = 60 gammas = 6×10^{-4} gauss at 8 R_E, one finds

$$|\bar{v}_E| = \frac{c\,|\bar{E}|}{|\bar{B}|} = \frac{3 \times 10^{10} \times 5 \times 10^{-8}}{6 \times 10^{-4}}$$

$$= 2.5 \times 10^{6} \text{ cm/sec} = 25 \text{ km/sec} .$$

But plasma co-rotating with the earth at 8 R_E would move only ~ 3 km/sec. Thus, though the plasma is moving in roughly the pattern expected for earth-driven convection it is doing so at a much higher speed than the earth's rotation would produce.

There is another peculiar feature of this rotational pattern, which is evident in Figure 2. Remembering that the center of rotation of the plasma in the tail is the point of high potential there, note in Figure 2 that this rotational axis does not coincide with the magnetic axis (approximately the rotational axis) of the earth. Instead, the axis of rotation of the tail strikes the earth about 15° from the earth's axis near the midnight meridian.

In attempting to understand the meaning of the potential patterns discussed above we ask

(a) Is it possible that a rotational convective pattern driven by the earth might be amplified (while, at the same time, not being altered beyond recognition) by an influx of solar wind plasma?

(b) Might the axis of rotation of the earth-generated pattern be displaced from the earth's axis of rotation by the influx of solar wind?

In a search for answers to these questions some simple demonstrations of flow around rotating bodies in water were conducted. The results of these demonstrations suggest affirmative answers to both questions.

II. DESCRIPTION OF EXPERIMENTS

The experiments described here were done at the Hydraulics Laboratory of the University of Iowa in a glass-walled flume (tank) about 30 feet long, 20 inches deep, and 24 inches wide. The flume was equipped with a carriage above it which could be drawn along at constant speeds up to ~ 1 ft/sec. The carriage was outfitted with a motor and pulleys to rotate objects projecting into the water below. A camera and lights were also mounted on the carriage so that water flow patterns could be photographed in the reference frame of the moving carriage. Aluminum powder, sprinkled on the surface of the water, provided a means of measuring the velocity distribution of the surface of the water by the length of the streaks the powder particles made in a camera exposure of known duration.

A. Experiments with Rotating Cylinders

Two cylinders, 15 inches long, one with 2" diameter, and the other with 3 1/2" diameter, were mounted (with their axes vertical) so that the large cylinder followed the small one as the carriage moved along. The pulleys were arranged so that the cylinders rotated in opposite directions. This experiment was meant to represent, qualitatively, the oppositely rotating

forward and tail portions of the magnetosphere, as depicted in Figure 3. Both cylinders rotated at ~ 1 rps, which provided surface velocities of ~ 6"/sec and ~ 11"/sec for the small and large cylinders, respectively. Pictures were taken of the circulation motion on the water surface with (a) cylinders rotating, carriage stationary; (b) cylinders not rotating, carriage moving; and (c) cylinders rotating and carriage moving. One such set of pictures is shown in Figures 4, 5, 6, and 7. In Figures 6 and 7 the sense of rotation of the cylinders is reversed so that both sides of the flow pattern may be seen. The carriage velocity in these pictures (except in Figure 4) was ~ 4"/sec. The camera exposure time was ~ 1/40 sec in all four pictures.

Cylinder rotation alone (Figure 4) produces a circulation around each cylinder, its velocity midway between the cylinders being considerably less than the surface velocity of the cylinders. Carriage motion without cylinder rotation (Figure 5) creates flows of equal velocity past both sides of the cylinders with a distinct dead-water region between them. Visual observations showed that this region is, most of the time, quite still, though there are occasionally slight lateral motions and whirls seen in it. Cylinder rotation and carriage motion combined

(Figures 6 and 7) produce a flow pattern which is quite different from a simple super-position of the two other patterns. One notes that the flow between the cylinders becomes quite fast, essentially that of the free stream. Thus, cylinder rotation effectively causes a part of the passing stream to be deflected and to flow between the cylinders with a velocity several times faster than that which rotation of the cylinders alone provides.

This behavior is not actually very surprising and is easily understood. The motion of the stream is opposed on one side of the front cylinder and on the other side of the back cylinder. Thus, the passing water is deflected, laterally, one way by the front cylinder and oppositely by the back cylinder. The result is a turning or deflection of a part of the passing stream, which is thus caused to flow between the cylinders.

Deflection of the stream by the rotating cylinders was found to depend upon the ratio of cylinder rotation speed to carriage speed. For cylinder angular velocity of 1 rps, deflection of the stream was quite strong until carriage speeds of 6" to 8" per second were reached. At higher speeds, there was little deflection and the region between the cylinders no longer showed much lateral flow, though a confined vortex pattern was often present.

Various modifications of the experiment with two cylinders were tried: The cylinders were spaced closer together; the cylinders were rotated only one at a time; two cylinders of the same diameter (2") were used. In each of these variations, qualitatively the same result--deflection of part of the stream into a path between the cylinders--was obtained so long as the carriage velocity was about equal to, or less than, the surface velocity of the cylinders. One may ask whether the flow patterns at the surface of the water shown here fairly depict the flow below the surface. Visual observations made through the glass walls of the flume showed that the patterns of flow were essentially the same, over nearly the full height of the water, as they were on the surface, differing significantly only very near the bottom of the flume. Attempts to photograph the flow below the surface were not successful though this could readily be done with suitable lighting arrangements.

In another variation of the experiment with cylinders, only one cylinder was mounted on the carriage. Figures 8, 9, and 10 show (a) cylinder rotation without carriage motion, (b) carriage motion without cylinder rotation, and (c) combined rotation and translation. It is seen that cylinder rotation does not have any notable effect on the flow pattern.

Visual observations revealed a vortex street downstream from the cylinder and its character was not visibly changed in any consistent way by cylinder rotation.

B. Experiment with a Rotating Sphere

A metal sphere 6" in diameter was mounted on the carriage and could be submerged to any desired depth. It was rotated at angular speeds up to ~ 4 rps. The object of this experiment was to examine the circulation pattern set up by the rotation of the sphere and to determine whether the axis of the circulation pattern would be displaced downstream from the sphere's rotational axis when the carriage was moved. Circulation patterns below the surface of the water could be studied visually by stirring aluminum powder particles into the water. The particles settled to the bottom very slowly when the water was left completely undisturbed, but the circulation velocities imparted by the rotation and translation of the sphere were much greater than the settling velocity.

The sphere's rotation, with the carriage at rest, set up a well-defined circulation pattern in the surrounding fluid, though establishment of the equilibrium pattern required 10 or 15 seconds due to the low viscosity of the water.

In the equilibrium pattern (sketched in Figure 11) water was seen to be ejected radially at a high velocity in a very thin plane coincident with the rotational equatorial plane. It then moved slowly upward (at points above the equator) and downward (at points below the equator) and back toward the sphere, finally approaching the sphere along the rotational axis. This whole pattern of flow circulated slowly about the rotational axis in the direction of the sphere's rotation.

No pronounced vorticity developed over the poles of the sphere's rotational axis, presumably because of the low viscosity of water. Thus it was difficult to determine precisely what change occurred in the position of the circulation axis when the rotating sphere was drawn along through the water. When the sphere's lower surface was set about 4" above the bottom of the flume, however, a weak whirl was seen to extend to the bottom of the flume and to pick up aluminum powder particles. When the carriage was then moved slowly, this whirl dragged behind the sphere and did appear to touch the sphere at least 30 degrees downstream from the rotational pole (Figure 12). These observations suggest that rotation of a sphere in a moving fluid about an axis perpendicular to the direction of fluid flow will cause rotation of the fluid and the axis of this

rotational pattern will be displaced from the sphere's rotational axis. This could be determined with more certainty by doing the experiment in a fluid more viscous than water.

III. DISCUSSION AND CONCLUSIONS

Though they admittedly are not simulations of the solar wind-magnetosphere interaction, the simple experiments reported here have, it is believed, demonstrated the plausibility of the suggestion made by Taylor and Hones [1965] that the circulatory convection which appears to exist in the magnetosphere derives its basic direction and pattern from the earth's rotation but it is largely powered by plasma diverted (because of the earth's rotation) from the passing solar wind stream.

Just where the plasma enters the magnetosphere it is not possible to say with certainty. However, we noted that the water stream was deflected by the rotating cylinders only when the carriage speed was less than the surface speed of the cylinders. This suggests, qualitatively, that solar wind plasma would enter the magnetosphere most easily near the sub-solar region where the thermalized plasma in the transition region has minimum streaming velocity--a velocity perhaps not orders of magnitude greater than the earth-driven rotation of the magnetosphere's surface (about 5 km/sec). Furthermore, the configuration of the electric potential in Figure 1 implies an $\overline{E} \times \overline{B}$ drift <u>into</u> the magnetosphere in mid-afternoon, magnetic local time (MLT). These two pieces of evidence imply that solar

wind entry into the magnetosphere occurs on the afternoon side of the subsolar region. This thought is supported by the observation [Evans et al., 1965] that precipitating low energy protons are encountered at high latitudes in early afternoon, but not in the forenoon (MLT). If the ability of solar plasma to enter the magnetosphere is strongly sensitive to the plasma's velocity relative to the magnetosphere's surface velocity, then it is probably sensitive, also, to the aspect of the dipole axis relative to the earth-sun line. One expects, therefore, that the plasma stream intensity in the magnetosphere will be modulated by the daily wobble of the earth's magnetic axis and by the annual change of the rotational axis' orientation relative to the earth-sun line.

The solar wind stream, expanding into the magnetosphere, forces its way along, acting much as the plasma in a magnetohydrodynamic (MHD) generator. Here, however, unlike the situation in most MHD generator designs, the (externally generated) magnetic field is not uniform. Rather, it ranges from strengths which are capable of strongly resisting the plasma flow to strengths which are almost completely overwhelmed by the currents flowing in the plasma. The plasma, as in an MHD generator, becomes electrically polarized, and we

suggest that it is this polarization field, projected along magnetic field lines to the ionosphere, which drives the SD current system. Thus, the currents or the potential system in the high-latitude ionosphere may be regarded as indicators of the path followed by the solar wind plasma stream through the magnetosphere. The potential system depicted in Figure 1 shows, for example, that the plasma stream circles roughly three-fourths of the way around the earth and does not appear to stream out of the magnetosphere's tail near midnight. This supports, of course, the view that the earth's rotation determines the course to be followed by the solar plasma stream despite the greater velocity of the latter.

If we identify the region of densely-spaced potential contours in Figure 2 (e.g., near midnight, the -10 kV to the +50 kV lines) with the plasma stream, we see in Figure 1 that the inner boundary in the equatorial plane lies at about 6 earth radii and the outer boundary is at 15 to 20 earth radii. (The outer boundary in the equatorial plane is, of course, poorly defined and depends upon the geometry of the magnetic field used in the model. It may be much farther out; there may, in fact, be no sharp outer boundary to the stream.) It seems entirely plausible that the drift and magnetization

currents in the plasma stream may contribute significantly to a ring current. (Note that the gross flow of the neutral plasma does not constitute a current.)

In the more distant reaches of the plasma stream, where the external magnetic field (i.e., that of the earth and of the currents in the magnetopause) is largely overwhelmed and reshaped by the plasma's currents, one expects that magnetization and drift currents in the solar plasma stream may constitute the current sheet recently detected with the IMP satellite in the tail of the magnetosphere. (The source of drifting particles and inclusion of magnetization current make this suggestion differ from that of Taylor and Hones [1965] that the current sheet may be due to magnetic drift of solar wind electrons trapped at the boundary of the magnetosphere and flowing across the tail under the influence of the potential system of Figure 1.) Since, as seen in Figure 1, the plasma stream nearly circles the earth, one expects to find a current sheet (or current sheets) extending around the earth (beyond $\sim 8\ R_E$) all the way from $\sim$ 1400 MLT, through midnight, to $\sim$ 1000 MLT.

The magnetic field is strongly perturbed in that region of the magnetosphere through which the solar wind plasma stream flows. Consequently, one expects that high energy particles

cannot be contained in this region for long periods. Instead, such particles will diffuse rapidly through the region. Thus, the lines of force touching the inner edge of the plasma stream should define, approximately, both the low-latitude boundary for admission of low-energy solar protons and the high-latitude boundary for trapped radiation. Therefore, determinations of the cut-off latitude of low energy solar protons, such as that reported by Stone [1964] and of the high-latitude limit of trapping of moderate energy electrons such as that of Armstrong [1965] provide other indications of the location of the inner boundary of the solar plasma stream.

It is expected that the characteristics of the plasma stream will not be symmetrical around the noon-midnight meridian plane. For example, by analogy with the experiment with two rotating cylinders (Figures 6 and 7) the plasma stream may leave the magnetosphere somewhat farther from the subsolar point (toward morning) than it enters. One expects, thus, to find forenoon-afternoon asymmetries in various phenomena such as cut-off latitudes of solar protons and of trapped radiation. Also, one may expect the inner boundary of the stream to be relatively sharp near its region of entry but more diffuse near its region of exit, after having traversed the magnetosphere.

As was indicated earlier, it is not clear whether or not the solar plasma stream has an outer boundary within the magnetosphere--that is, whether there are closed magnetic lines from the earth, which go beyond the plasma stream and, in a sense, contain it in the magnetosphere. We are inclined to believe, on the bases of the occurrence of polar cap auroral arcs [Davis, 1962] and the anti-correlation of their occurrence with magnetic activity [Davis, 1963], that when the solar wind maintains a low or average velocity for a few hours all of the magnetic field lines adjust to the plasma flow, become closed, and can cause the ordering of particles which, it seems must be necessary to generate auroral arcs.

An increase in solar wind speed or density would be expected to cause an increase in the intensity (and perhaps the speed) of the plasma stream through the magnetosphere. Since the flow velocity, $\bar{v}_E$, of the stream is ~ 8 to 10 times (or perhaps more, when the solar wind is enhanced) that required to keep up with the earth's rotation, it seems that an increase of solar wind flow would make itself felt all the way around the earth in two to three hours. This agrees with observed delays, often of one to a few hours' duration, between magnetic storm sudden commencements and the beginning of the main phase.

If the theory being discussed here is correct, one would expect to see local-time asymmetries in high latitude magnetic activity as the increased plasma flow encircles the earth. (For that matter, it may be possible, in general, to trace the progress of stream irregularities around the earth, either by auroral, radio, or magnetic effects observed from the ground or by suitable measurements with satellites.) The fact that the main phase is not fully developed in the 2- to 3-hour period required for essentially complete encirclement of the earth by the plasma stream increase seems to imply that the plasma energy fed into the magnetosphere in a single encirclement of the earth by the stream is not adequate to provide the main phase ring current. Some kind of storage process must occur whereby stream plasma accumulates in the magnetosphere during the 10 to 20 hour period required for full development of the main phase.

The region of high potential shown ~ 15° from the pole near midnight in Figure 2 is, we believe, the region where the axis of rotation of the tail touches the earth. The experiment with the rotating sphere suggested that a displacement from the earth's axis may be expected. When solar wind velocity and/or density is increased, one would expect this

region of contact to be driven farther from the pole and to be more nearly on the midnight meridian. The intensity of the currents around it should also increase corresponding to the expected increase in velocity of the plasma stream through the magnetosphere. One is reminded of the observation by Chapman and Bartels [1951, p. 290] that the general shape and orientation of the disturbance field, SD, are relatively independent of the intensity of magnetic disturbance, though the high-latitude region in which the strong SD currents flow appears to broaden and move toward lower latitudes during periods of intense disturbance. This is essentially the response of the SD current system to an enhanced solar wind flow that one would expect from the theory put forward in this paper.

A number of authors have examined the possibility that perturbations of the magnetosphere boundary caused by variations of the solar wind pressure outside cause inward diffusion and energization of trapped particles, thus providing some fraction of the energetic particles in the radiation belts. It would appear, however, that the continual fluctuations of the solar plasma stream through the magnetosphere (caused both by solar wind fluctuations and by the daily wobble of the earth's magnetic axis) may be a stronger and more persistent perturbation

mechanism, since the inner boundary of the stream is so much closer to the earth (and to the high energy radiation belts) than is the magnetospheric boundary. In fact, too, the solar stream probably is the source of most of the radiation belt particles. Solar wind electrons, protons, and alpha particles may be detached, in some manner (possibly by non-conservative electric fields associated with the time-varying magnetic structure in and near the stream) and injected into durably trapped orbits closer to the earth.

We conclude that the earth's rotation plays a very significant role in determining the nature of the solar wind's interaction with the magnetosphere, and, indeed, may be essential to the efficient coupling of solar wind energy into the magnetosphere. That is, if the earth rotated in the opposite direction, the SD current system would be reversed. If the earth did not rotate at all (but somehow managed to retain its magnetic field) there might be little injection of solar wind energy and the magnetosphere would have the short, squat structure which theory predicts when only the normal component of the solar wind pressure is considered [Mead, 1964].

It may be possible to evaluate, roughly, the role of the earth's rotation in existing laboratory facilities which have been developed to study the interaction of plasma with

magnetized spheres (i.e., terrella experiments). A significant test would require that the surface of the sphere be conducting and that collision frequency in the plasma be low enough that electrical conductivity perpendicular to B be very small. It would seem that terrella angular speeds no greater than a few hundred rps might be adequate to produce detectable changes in the properties of the miniature magnetospheres that are produced in such experiments.

ACKNOWLEDGEMENTS

I gratefully acknowledge the interest shown in this work by Dr. James A. Van Allen. The helpful cooperation of Dr. Louis Landweber and the skillful assistance of Mr. Shin Kien Chow, both of the University of Iowa Hydraulics Laboratory, made the experimental work possible.

REFERENCES

Armstrong, T., Morphology of the outer zone electron distribution at low altitudes from January through July and September 1963 from Injun 3, J. Geophys. Res., 70, 2077-2110, 1965.

Axford, W. I., and C. O. Hines, A unifying theory of high-latitude geophysical phenomena and geomagnetic storms, Can. J. Phys., 39, 1433-1464, 1961.

Chapman, S., and J. Bartels, Geomagnetism, Vol. I, Clarendon Press, Oxford (1951).

Davis, T. N., The morphology of the auroral displays of 1957-1958. 2. Detail analysis of Alaska data and analysis of high-latitude data, J. Geophys. Res., 67, 75-110, 1962.

Davis, T. N., Negative correlation between polar cap visual aurora and magnetic activity, J. Geophys. Res., 68, 4447-4453, 1963.

Evans, J. E., R. G. Johnson, E. G. Joki, and R. D. Sharp, Austral and boreal auroral zone precipitation patterns for low energy protons. Paper presented at 6th International Space Science Symposium of COSPAR, 1965.

Johnson, F. S., The gross character of the geomagnetic field in the solar wind, J. Geophys. Res., 68, 3049-3051, 1960.

Levy, R. H., H. E. Petschek, and G. L. Siscoe, Aerodynamic aspects of the magnetospheric flow, Avco Everett Research Report No. 170, December 1963.

Mead, G. D., Deformation of the geomagnetic field by the solar wind, J. Geophys. Res., 69, 1181-1195, 1964.

Silsbee, H. C., and E. H. Vestine, Geomagnetic bays, their frequency and current systems, Terr. Mag. and Atmos. Elec., 47, 195-208, 1942.

Stone, E. C., Local time dependence of non-Stormer cutoff for 1.5 MeV protons in quiet geomagnetic field, J. Geophys. Res., 69, 3577, 1964.

Taylor, H. E., and E. W. Hones, Jr., Adiabatic motion of auroral particles in a model of the electric and magnetic fields surrounding the earth, J. Geophys. Res. [August, 1965].

FIGURE CAPTIONS

Figure 1. Equatorial plane of magnetosphere model showing electric equipotentials, labelled in kilovolts.

Figure 2. North magnetic polar cap of earth showing electric equipotentials labelled in kilovolts.

Figure 3. Equatorial plane of magnetosphere, indicating manner in which rotating cylinders (represented by heavy-dashed circles) were used to represent oppositely-rotating portions of magnetosphere.

Figure 4. Cylinders rotating; carriage stationary. Large cylinder rotates clockwise, small one counterclockwise, both at ~ 1 rps.

Figure 5. Cylinders not rotating; carriage moving to right at ~ 0.3 ft/sec.

Figure 6. Cylinders rotating ~ 1 rps; large cylinder clockwise, small cylinder counterclockwise; carriage moving to right at ~ 0.3 ft/sec.

Figure 7. Cylinders rotating ~ 1 rps; large cylinder counterclockwise, small cylinder clockwise; carriage moving to right at ~ 0.3 ft/sec.

Figure 8. 2-inch diameter cylinder rotating clockwise ~ 1 rps; carriage stationary.

Figure 9. 2-inch diameter cylinder not rotating; carriage moving to right at 0.3 ft/sec.

Figure 10. 2-inch diameter cylinder rotating clockwise ~ 1 rps; carriage moving to right at 0.3 ft/sec.

Figure 11. Sketch of circulation pattern around 6" diameter sphere rotating in water; bottom of sphere is ~ 4" above bottom of tank; carriage is stationary. Sense of rotation of water in spiral pattern at bottom is same as that of sphere.

Figure 12. Sketch of bottom portion of circulation pattern around 6" diameter sphere rotating in water; bottom of sphere is ~ 4" above bottom of tank; carriage moving slowly to left. Sense of rotation of water in spiral pattern is same as that of sphere.

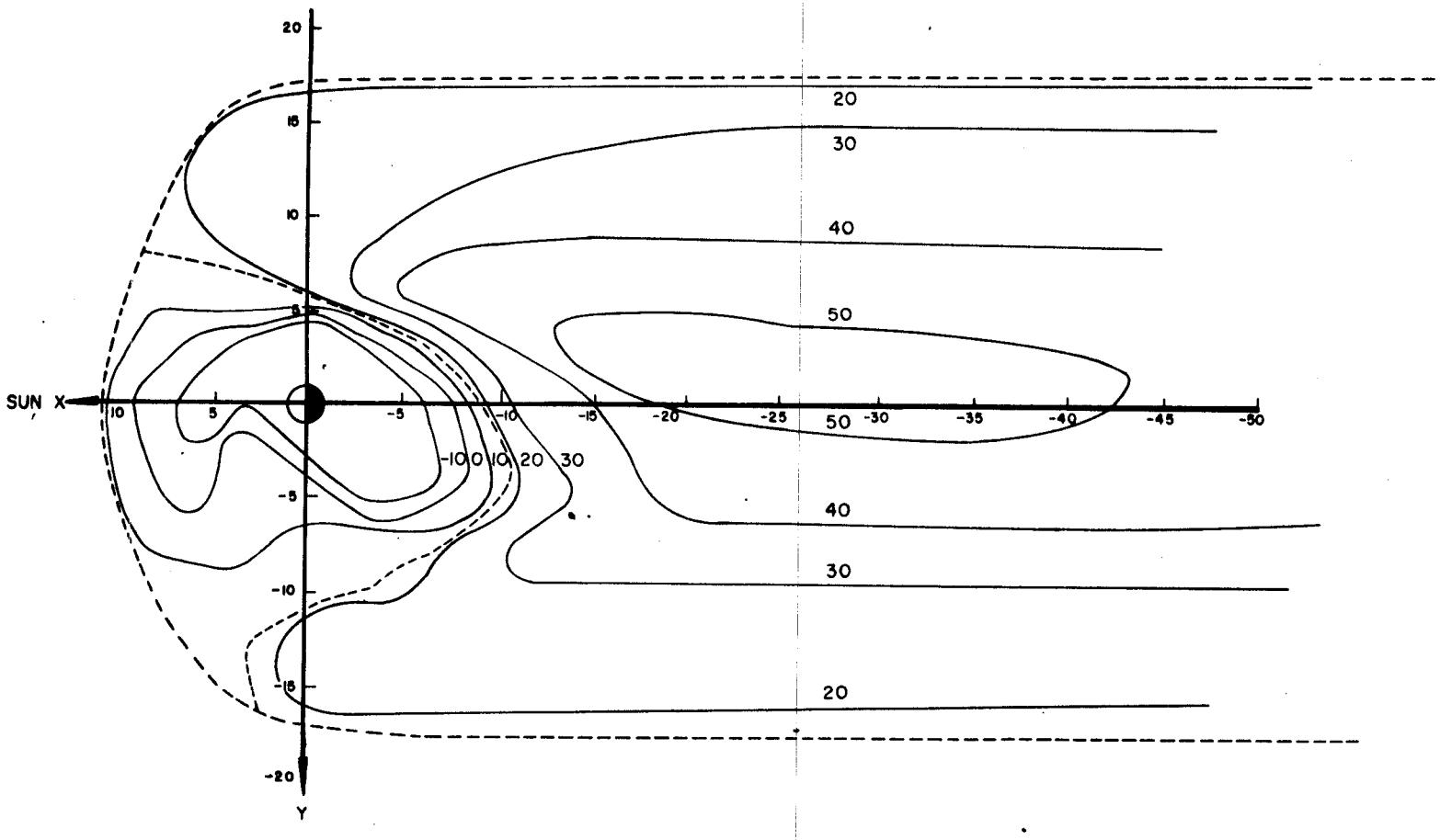
SUN X
Y
20
15
10
5
-5
-10
-15
-20
10
5
-5
-10
-15
-20
-25
-30
-35
-40
-45
-50
20
30
40
50
50
40
30
20
-10
0
10
20
30

FIGURE 1

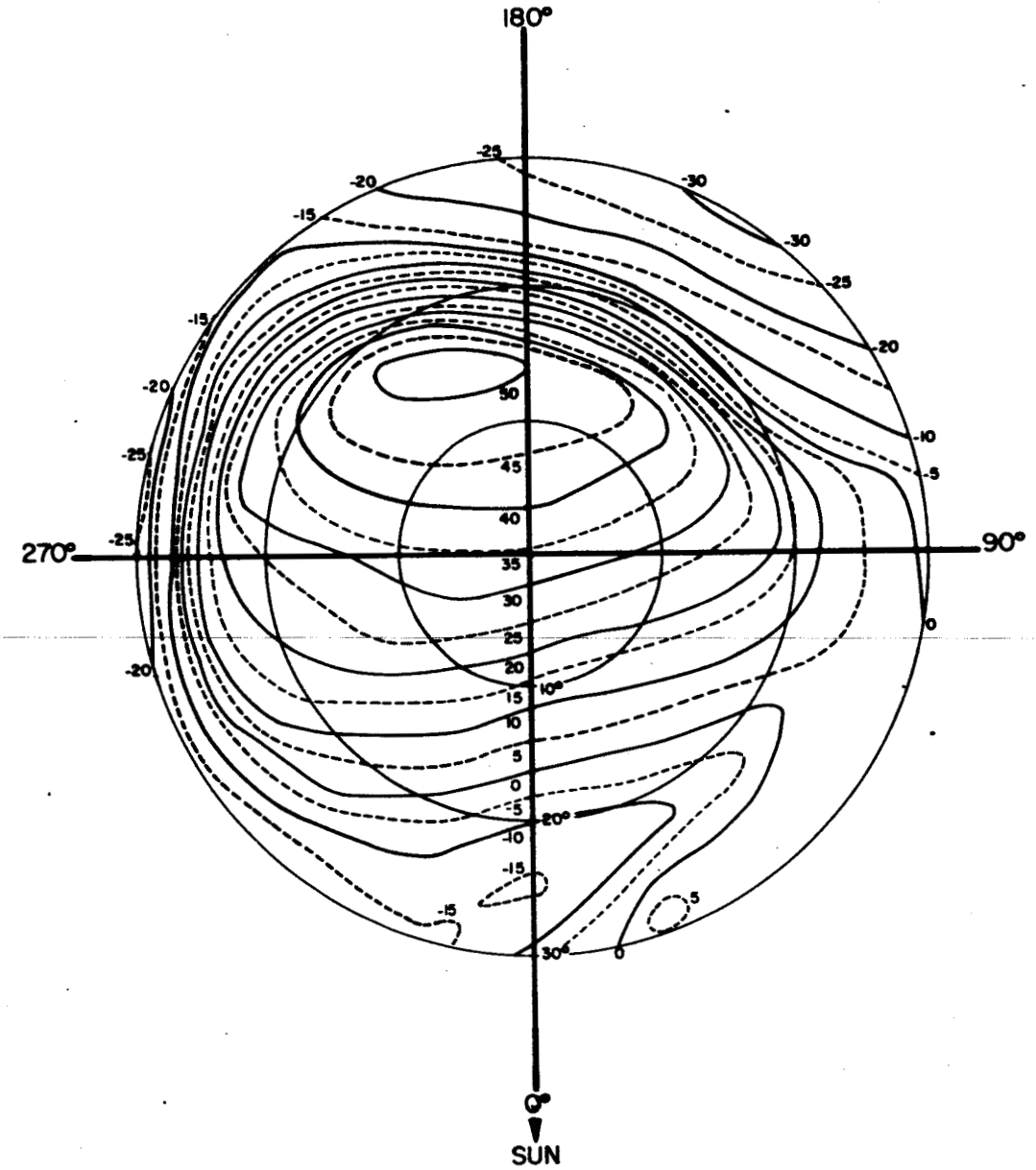

FIGURE 2

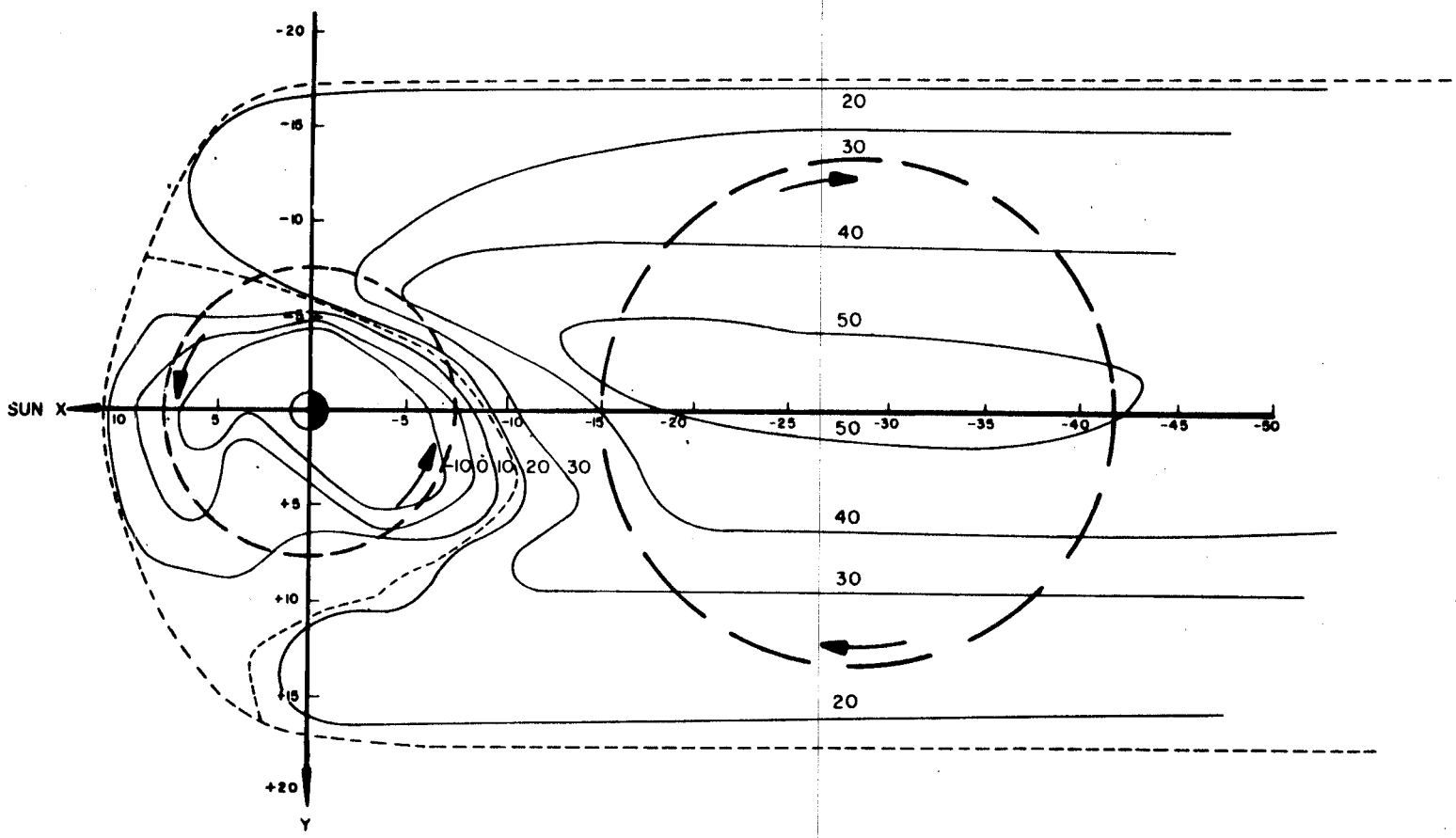
SUN X
Y
-20
-15
-10
-5
+5
+10
+15
+20
10
5
-5
-10
-15
-20
-25
-30
-35
-40
-45
-50
20
30
40
50
50
40
30
20
-10
0
10
20
30

FIGURE 3

65-47P.

FIGURE 4

65-479

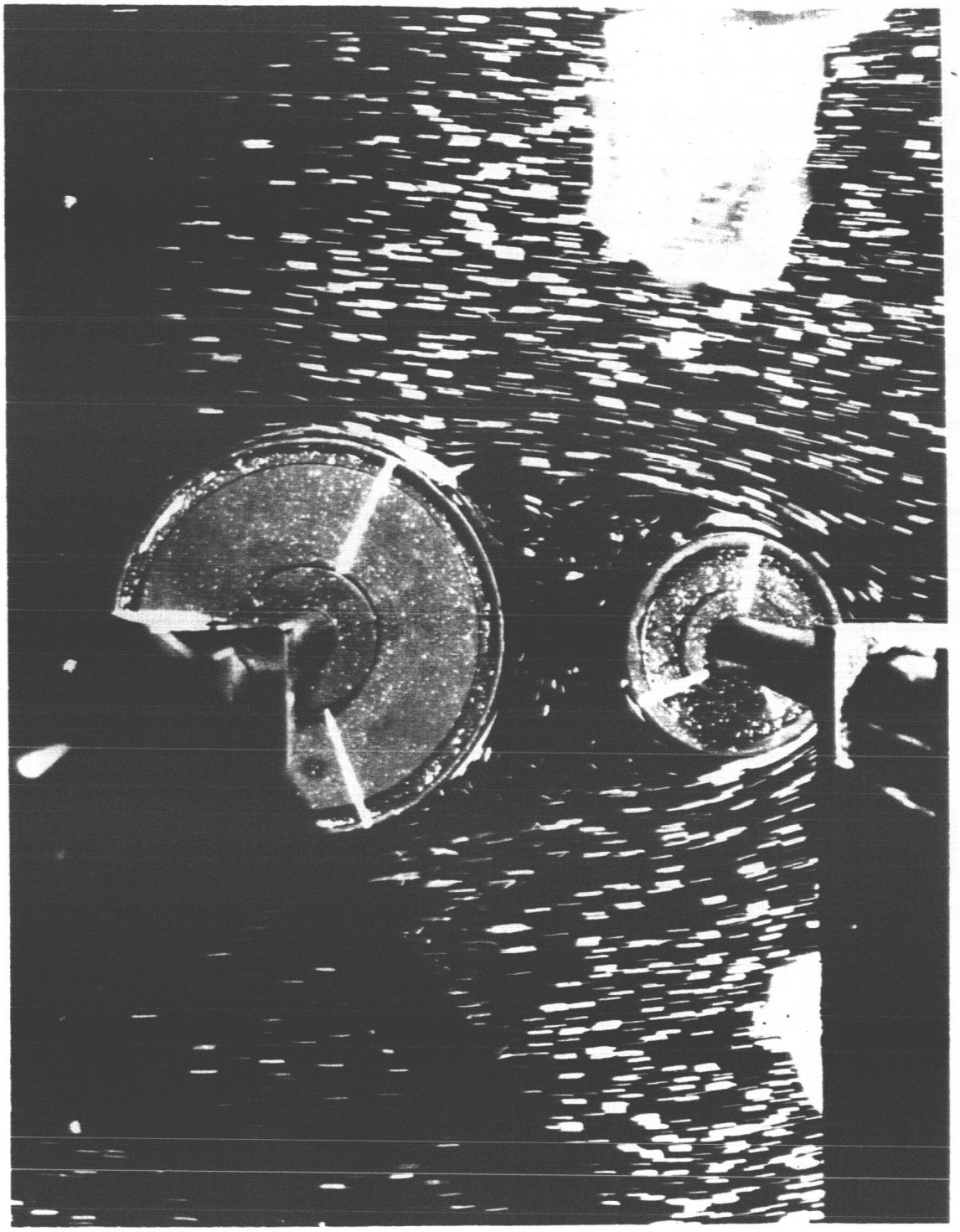

FIGURE 5

65-480

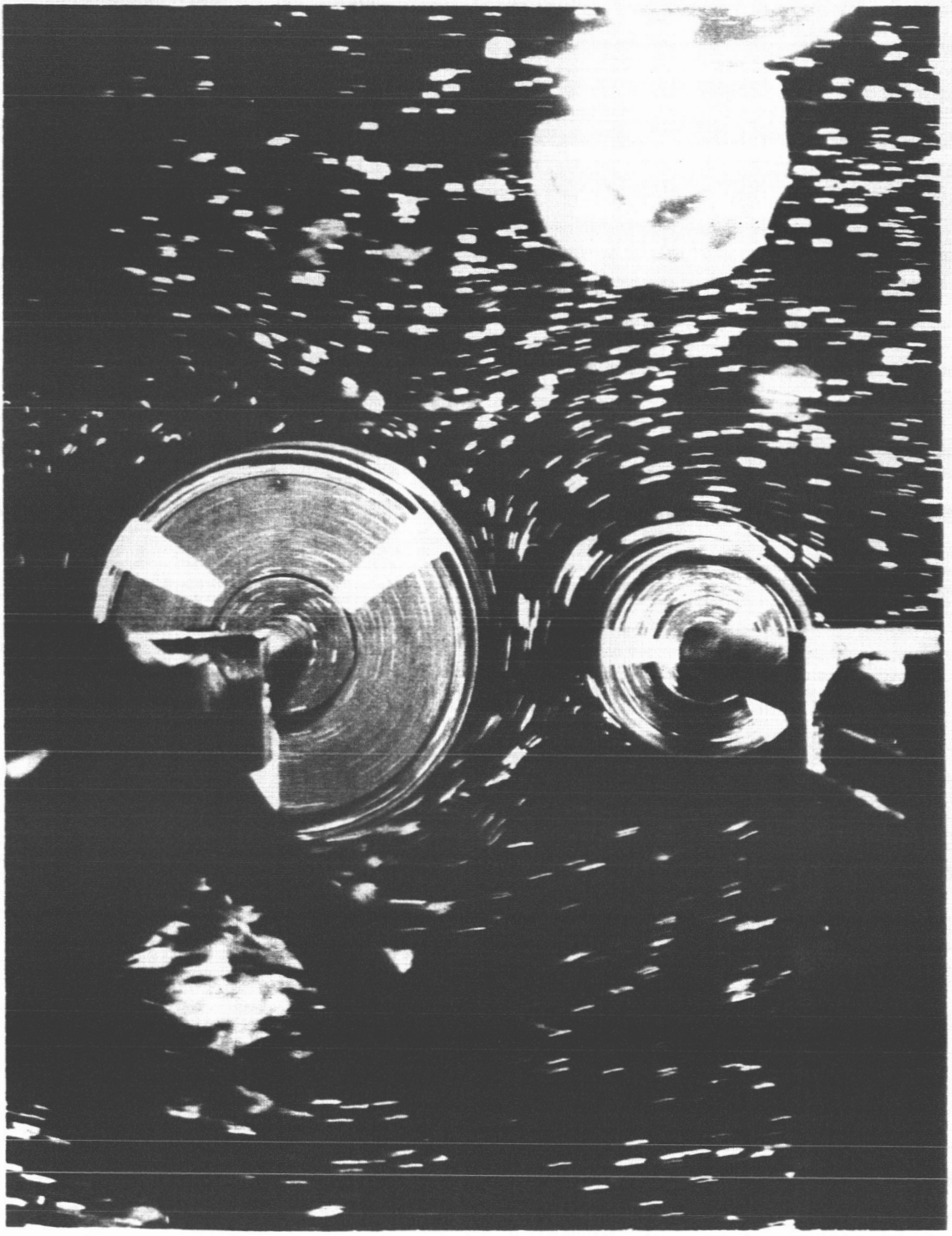

FIGURE 6

65-421

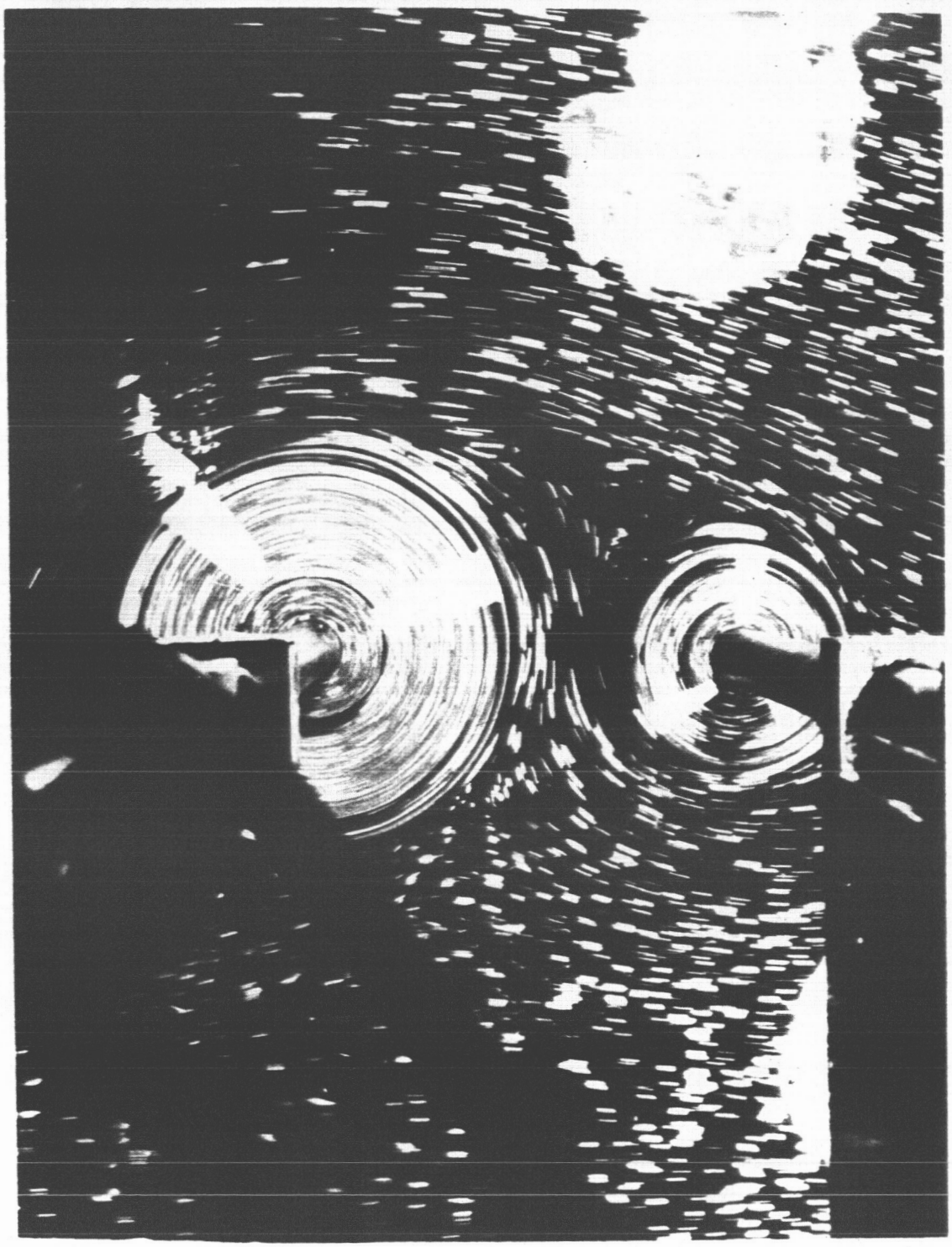

FIGURE 7

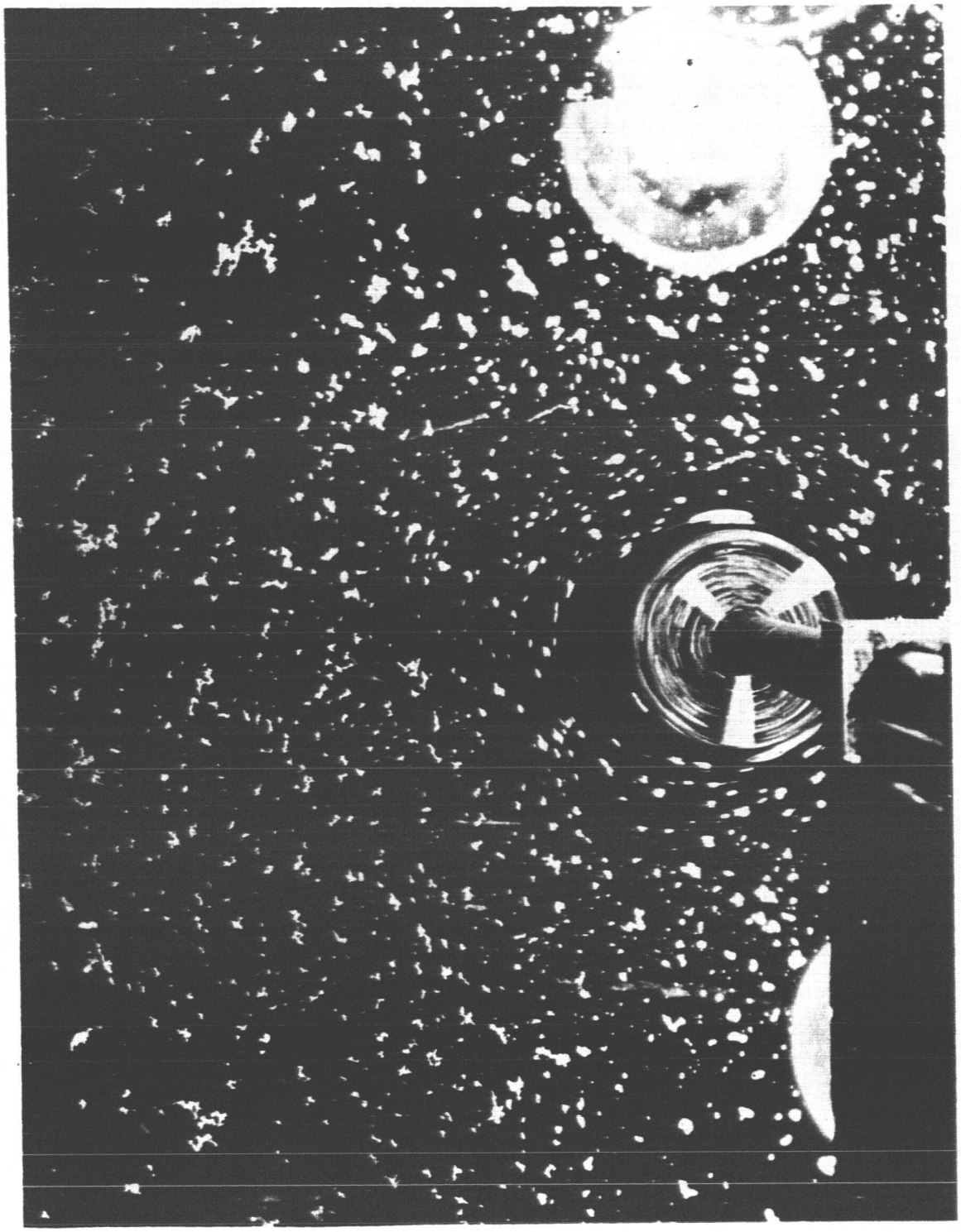

FIGURE 8

65-483

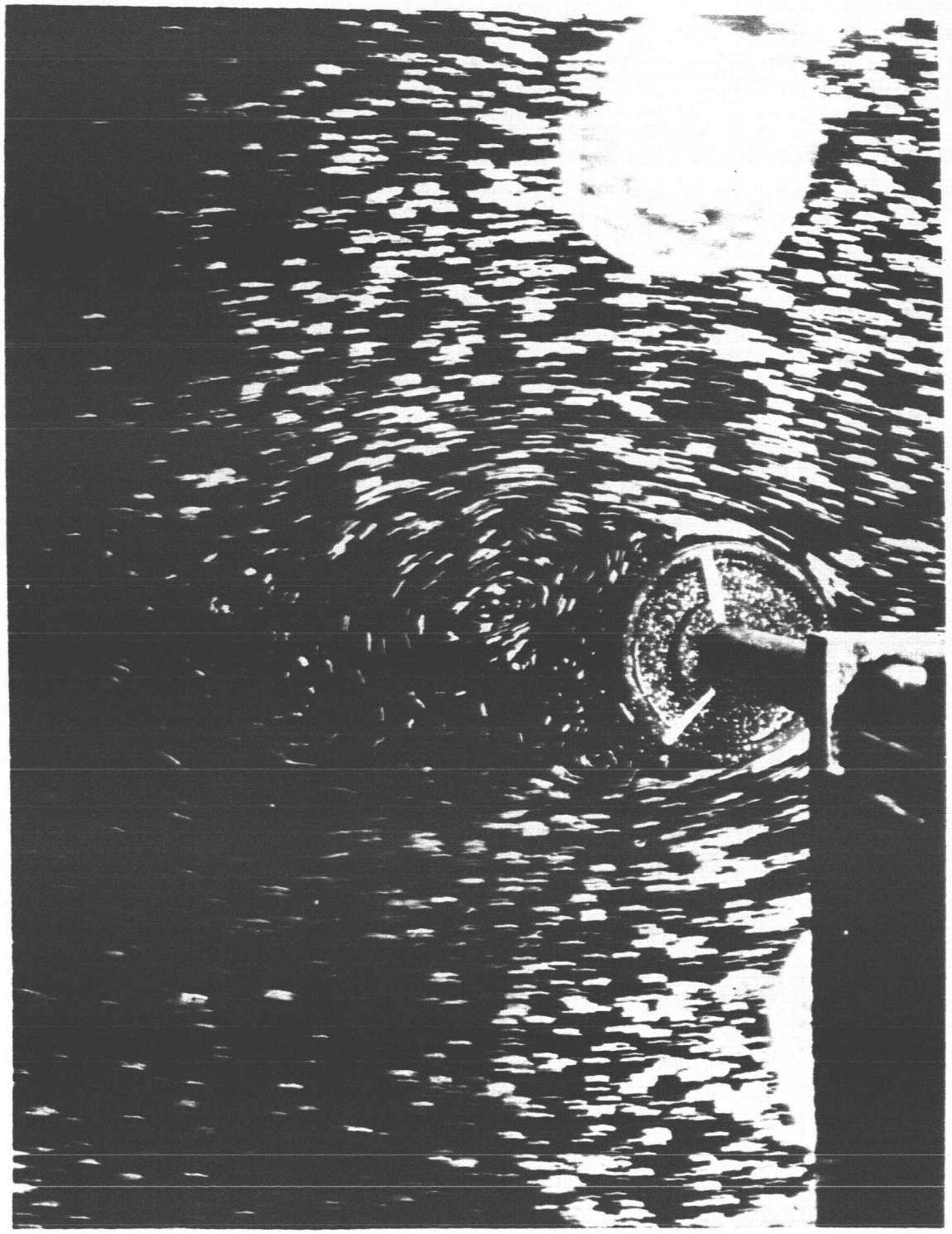

FIGURE 9

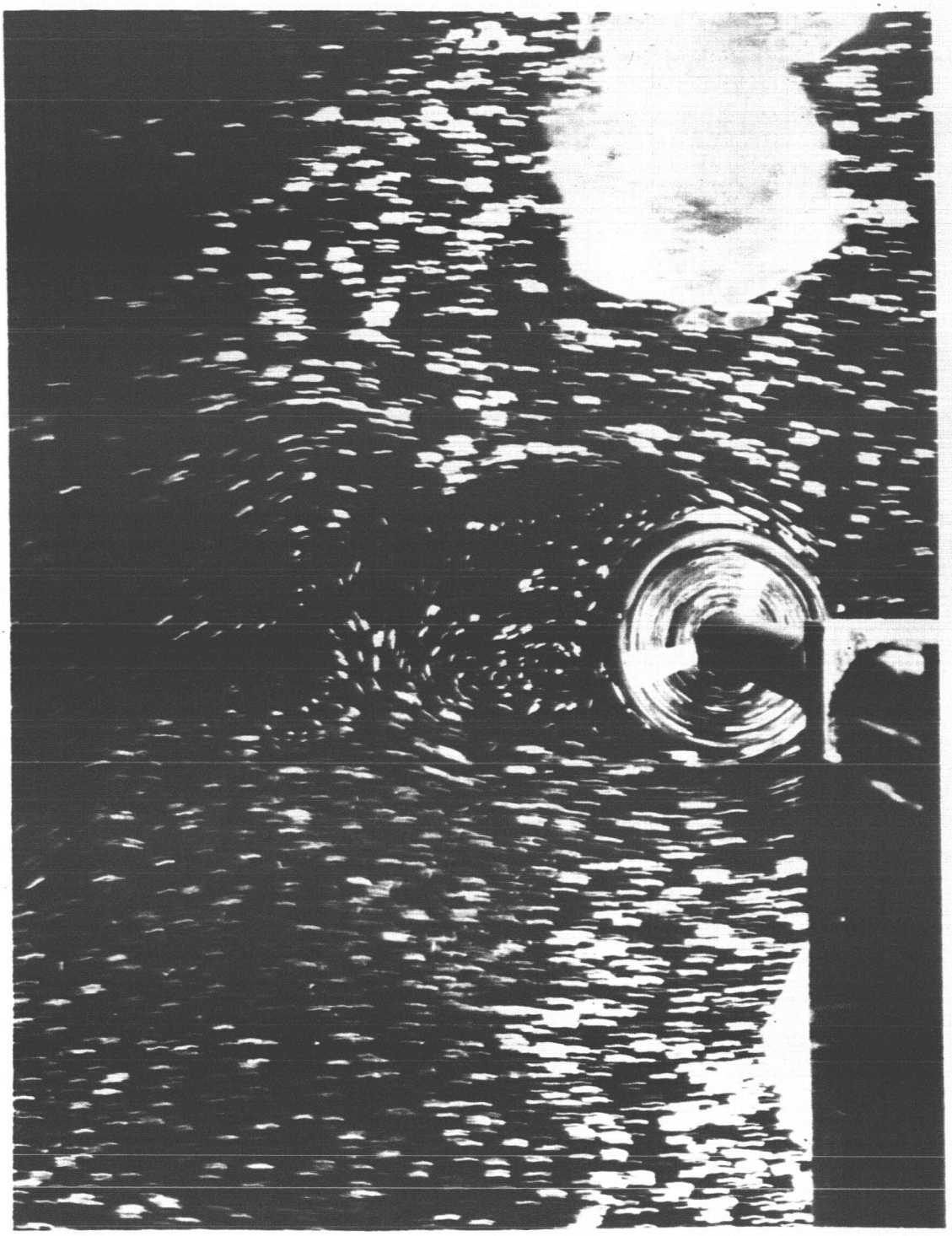

FIGURE 10

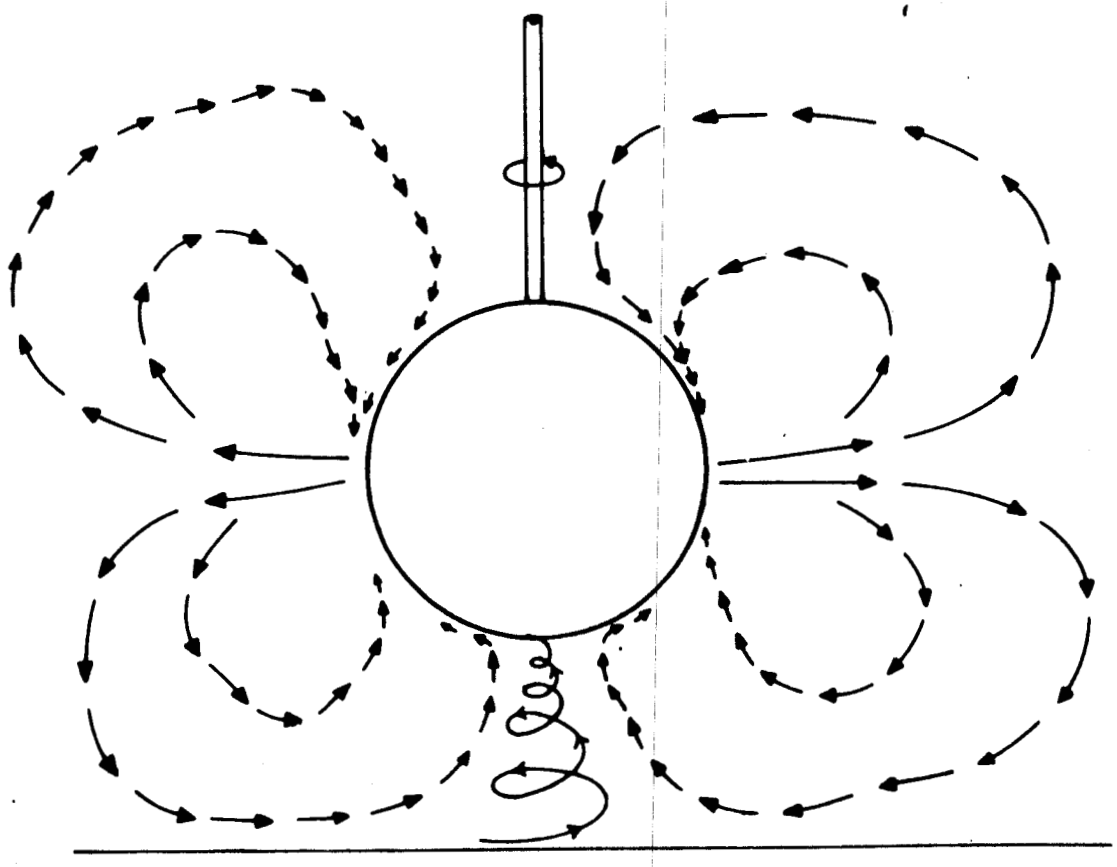

FIGURE 11

GRAPH NO. 65-171

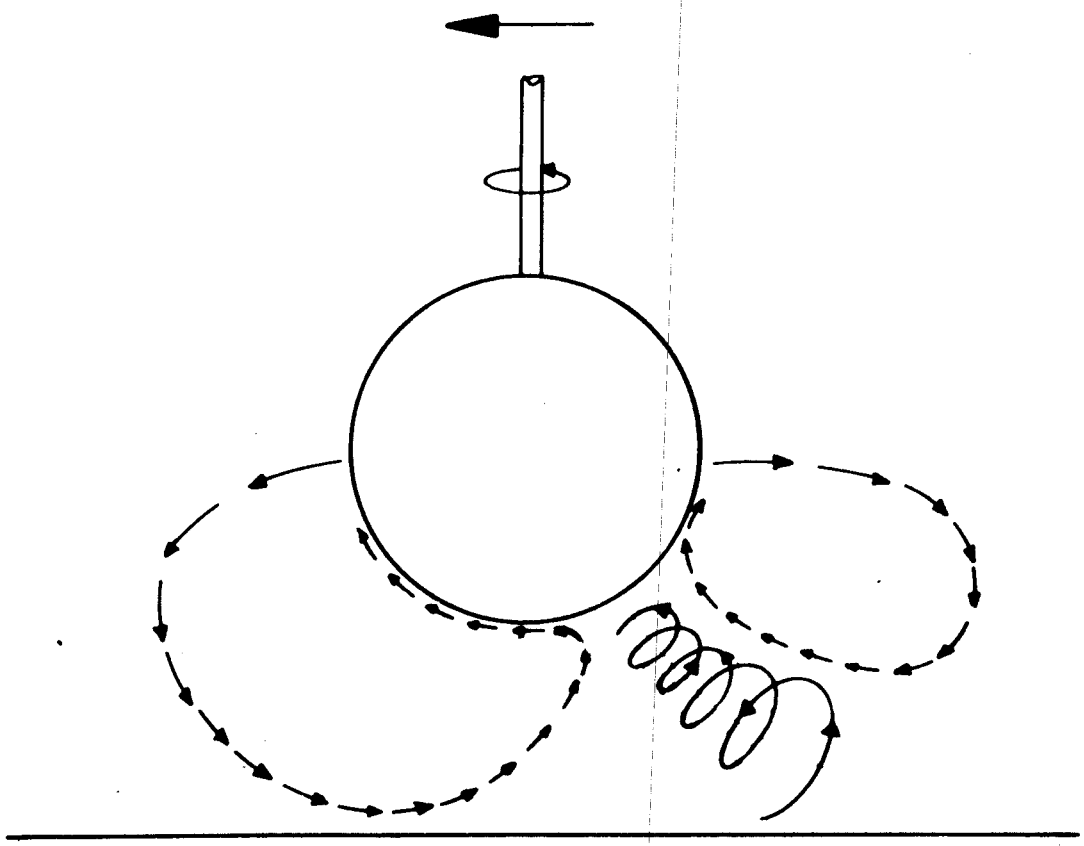

FIGURE 12