https://ntrs.nasa.gov/search.jsp?R=19670008661 2018-07-25T03:29:02+00:00Z

N67 17990

DECISION-MAKING IN SMALL GROUPS:

A Simulation Study*

194-66

Geoffrey P. E. Clarkson

May, 1966

NsG 235

* This research is supported by a grant from the Sloan School of Management, M.I.T., from funds provided by NASA, and by a grant from the Graduate School of Industrial Administration, C.I.T., from funds provided by the Ford Foundation and the National Institute of Health, for research in organizational decision behavior.

TABLE OF CONTENTS

Chapter		Page
I.	Group Decision-Making: An Information Processing Approach	1
	1. The Unit of Primary Importance - Group or Individual?	4
	2. The Theoretical Approach	8
	3. Interpersonal Influence and the Leader-Follower Relation	12
	4. The Experimental Environment	17
II.	Model of the Group Decision-Making Process	31
	1. The Basic Postulates	35
	2. The Monitor	37
	3. The Structure of the Decision Nets	61
	4. Memory and the Search and Selection Procedures	76
III.	Testing the Group Decision Model: Part I	78
	1. The Selection of Alternative Models	78
	2. Tests on the Model's Parameters	85
	3. Testing the Model Against a Simple Random Alternative	103
IV.	Testing the Group Decision Model: Part II	108
	1. Tests on the Model's Decision Processes	108
	2. Further Examination of the Results	122
V.	The Permanence of the Presumed Influence	129
VI.	Summary and Conclusions	137
	Bibliography	141

Chapter I

Group Decision-Making: An Information Processing Approach

The history of the behavioral sciences is in part a record of attempts to construct theories to explain and predict a wide variety of individual and group behavior. Indeed, diversity is one of this science's chief characteristics; it is reflected both in the languages and techniques with which its theories are formulated, tested, and discussed, e.g. the literature on group dynamics (Cartwright and Zander, 1960), the studies on interpersonal influence (Blake and Mouton, 1961), and the research on individual and group risk taking (Kogan and Wallach, 1964). In keeping with this heterogeneity the advent of computer simulation has led to the development of a further set of behavioral theories. Formerly theories of social behavior were stated either in prose (e.g. Homans, 1961) or in mathematical notation (e.g. Thibaut and Kelly, 1959). More recently the ability to simulate the behavior of such theoretical systems (e.g. Gullahorn and Gullahorn, 1962) has led to the inclusion of computer programs as a method of expressing theories of human behavior.

It should be noted immediately that simulation is not itself a type of theory. It is at best a precept, a method, a technique for orienting inquiry into the characteristics and behavior of a particular organism. In practice, simulation is a technique for building models that reproduce part or all of the output of a behaving system. It is theoretically and empirically significant if it is employed as the method by which an existing body of theory is submitted to test. In short, simulation is a vehicle with which empirical models of a given theory can be constructed and tested.

Initial applications of this technique have raised a number of intriguing issues. For by demonstrating that the practical problems of creating such models can be solved, questions concerning their empirical justification as well as their research potential are brought to the fore. For instance, if one is presented with a computer program which purports to simulate some aspect of human behavior what criteria are to be used to measure its "goodness-of-fit?" If the program chooses a response that differs from the observed, how is one to classify the error? It can be recorded as a "simple error," or one can attempt to search back through the program to identify what might be called the "error in the decision process." Alternatively, consider the case where one is presented with a model that reproduces some observed behavior with a high degree of accuracy. Given such a program can one identify those components which are in some sense "minimally sufficient" for the explanation of the test data?

Finally, what if a given program pertains solely to individual decision-making behavior? Suppose it to be capable of predicting certain aspects of an individual's decision behavior. In this case the question of interest is how to "aggregate" the individual theory into a theory of group or organizational behavior. That is to say, the issue is raised of how to specify the interactive processes employed by individuals such that group behavior can be generated by interconnecting models of individuals.

These examples by no means exhaust the range of problems posed by the application of this technique. They form, however, some of the basic questions to which the research reported in this study is addressed. For although the investigation is concerned with developing a theory of group decision-making, tests are conducted through the medium of simulation. Hence, questions about its empirical import cannot be avoided, and answers

must be provided.

The primary objective of this research is to develop a theory that can accomplish the task posed by the last question noted above. In brief, the goal is to account for the decision behavior of groups by an appropriate combination of models of individual behavior. Put in other words, this research is an attempt to construct a theory that is capable of explaining group decision behavior from a knowledge of the decision processes of its participants.

In order to develop a theory that will account for a group's decision behavior in this manner several theoretical difficulties must be faced and answers specified. Not the least of these are such problems as: What body of theory concerning decision-making behavior can be applied to explain the behavior of groups as a function of its members? Whatever theoretical schema is chosen it must be able to account for the leadership and influence relations that are a part of group behavior. In effect, it has to be able to answer the question: What behavior patterns or characteristics of the participants can be used to explain the leader-follower relations that evolve? In what manner and by that mechanism(s) does the process of arriving at a group decision affect (influence) the decision processes of the individuals concerned? Much experimental work has been done on the characteristics of both of these processes (Cartwright, 1965). But a theory that purports to account for observed behavior must include a detailed specification of the mechanisms by which interpersonal influence and leadership relations are taken into consideration. Lastly, it must not be forgotten that, if a theory is to be constructed that can accommodate these difficultues, an experimental environment is required within which it can be subjected to test. For, if the theory is to be used to explain group decision behavior,

then there must be a replicable decision task within the confines of which the behavior of groups can be matched against that of the theory.

Though there are many other problems to be faced by any theory that proposes to account for group decision-making in its entirety, these questions have been selected as the ones around which to organize the presentation of this research. The discussion will proceed by treating each of these topics and by presenting in turn the solutions proposed as well as the model into which they are incorporated.

1. The Unit of Primary Importance -- Group or Individual?

There are two main approaches to the development of a theory of group decision behavior. The first is to start with a set of concepts and postulates about group decision-making, and from these generate a set of testable hypotheses which can be used to account for observable behavior. Clearly, this is the general procedure that has guided the growth of theories of large groups or organizations (e.g. Blau and Scott, 1962; March and Simon, 1958). Such theories contain propositions to account for various classes of behaviors. But perhaps because of their generality they seldom state, in any detail, the actual mechanisms by which these hypotheses are to be empirically specified. Consider, for example, a selection of hypotheses that are taken from a theory of planning and innovation in organizations:

(1) "Those variables that are largely within the control of the problem-solving individual or organizational unit will be considered first."

(2) "If a satisfactory program is not discovered by these means, attention will be directed to changing other variables that are not under the direct control of the problem solvers."

(3) "If a satisfactory program is still not evolved, attention will be turned to the criteria that the program must satisfy, and an effort will be made to relax these criteria so that a satisfactory program can be found."

(4) "In the search for possible courses of action, alternatives will be tested sequentially." 1/

These propositions, though more detailed than most, do not contain within themselves a specification of the mechanisms by which they are to be empirically interpreted. In short, if they are to be stated in such a manner that they can be directly subjected to test, their concepts and hypothesized relations must be delineated in greater detail. Though the empirical interpretation of some may be quite straightforward (e.g. Cyert and March, 1963), it is reasonable to presume that the resulting propositions will be phrased in terms of the group as the basic unit. Concepts such as "satisfactory" and "criteria" could be defined by reference to the group itself or the organization as a whole. This would lead, however, to the difficulty of accounting for their origins as well as the mechanisms which guide their transmission through the organization and acceptance by the group.

An alternative approach is to interpret hypotheses of organizational (group) behavior in terms of the behavior of the individual members of which the group is composed. That is to say, treat the individual as the basic unit of a group or organization such that the behavior of the whole is explained as a function of the interaction of its parts. Then, if the behavior of these parts changes, the direction and content of the change can be used both as an influence measure and as a measure of the effect

---

1/ March and Simon, op. cit. pp. 170-80

of the group upon the individual. Such a position requires that the basic concepts and relations no longer refer to group phenomena. Instead they must encompass the relevant characteristics of individual decision-making behavior. In brief, a theory of individual decision behavior is required that is sufficient to account for the behavior of individuals, both when acting by themselves and when acting as a member of a group.

To examine some of the implications of this approach suppose for the moment that such a theory of individual behavior exists. Furthermore, suppose that the theory is stated in sufficient detail to permit it to account for each individual's behavior as well as the effects the group decision process has on the behavior of its participants. Finally, assume that the theory has been subjected to and has survived a number of empirical tests. Having assumed into existence a testable theory that can account for the behavior of individuals as individuals or as members of a group, to what use can such a theory be put? The proposed answer is to employ this theory as the empirical base for theories of organizational behavior. In effect, it is being suggested that existing theories of organizational behavior could be "reduced" 2/ to this testable theory of individual decision-making behavior.

If the reduction process is to succeed it implies that the theory of individual behavior must be constructed in such a manner that it is capable of explaining individual as well as group behavior. For this to

---

2/ For an excellent discussion of the process of reduction in empirical science see: E. Nagel, The Structure of Science, Harcourt, Brace and World, New York, 1961, Ch. 11; and P. Oppenheim and H. Putnam, "Unity of Science as a Working Hypothesis," in H. Feigl, et al (eds.) Minnesota Studies in the Philosophy of Science, University of Minnesota Press, Vol. II, 1958, pp. 3-36.

occur two conditions must be satisfied: The first requires that the hypotheses of organizational theories must be deducible from the hypotheses and postulates of the theory of individual behavior. If the hypotheses of organizational theories contain terms and expressions that do not appear in the theory of individual behavior, then it is not possible to meet the first criterion. In this case various assumptions or further hypotheses must be introduced to link the terms in the individual theory to the concepts and expressions in the organizational theories. For instance, if one is to be able to infer hypotheses about organizational conflict or about tendencies toward isolation and collaboration among groups, the individual theory must either already contain these terms and relations or additional postulates must be introduced to allow the derivation to take place.

The second main condition is that the basic postulates or principal hypotheses of the individual theory must be empirically testable as well as being reasonably well confirmed by the available evidence -- properties assumed to be true of the theory mentioned above. The purpose of this criterion is to ensure that essentially trivial reduction theories are not constructed. It would not be an important accomplishment to construct a set of hypotheses about individual behavior from which theories of organizational behavior could be deduced, if it were then not possible to subject them to empirical test. Hence, before one can accept a theory of individual decision-making as a possible basis for the reduction of theories of organizational behavior it must be demonstrated that its postulates or main hypotheses are both subject to test and reasonably well confirmed by the available evidence.

The theory of group behavior proposed in this paper is based upon the latter of these two approaches. It is an attempt to specify a theory

of individual behavior that is sufficient to serve as the reducing agent. How well it succeeds in this endeavor will be examined after the theory itself, the experimental environment in which it is subjected to test, and the data which determine its ability to account for group behavior have been discussed.

2. The Theoretical Approach

To explain a group's decision behavior when it is engaged upon a specified task, it is posited at this level of detail that it is first necessary to know the decision processes of each member of the group with respect to this task. To know an individual's decision processes implies the existence of a theory of individual decision-making from which the behavior in question can be inferred. To be able to deduce the specific sequence of actions that constitutes an individual's observable behavior requires a theoretical system in which it is possible to delimit decision processes in some detail. The theoretical schema that meets this requirement, and as a consequence is the one employed in this research, is an information processing theory of human decision-making (Newell, Shaw and Simon, 1958; Reitman, 1965).

An information processing theory accounts for the process of human problem solving by identifying the types of decision processes employed by humans while solving problems or making decision. It is a basic assumption of the theory that decision processes can be isolated and operationally defined. Moreover, it is assumed that sequences of observed behavior can be generated by whole programs of such processes, where a program constitutes an explicit statement of the processes to be used as well as the structure by which they are linked together.

That such a set of decision rules (program) can be considered to be a theory is evinced by satisfying the requirement that it must be possible to deduce unequivocally the externally observable behavior that will be produced by it. To ensure that this condition is met, the program of processing rules is translated into a formal language (in this case a computer language), and the logical consequences are derived by performing the particular operations according to the specified rules.

Theories of individual behavior have been developed to account for a number of aspects of human information processing, e.g. rote learning (Feigenbaum, 1963), hypothesis testing behavior in a binary choice situation (Feldman, Tonge and Kanter, 1961), and the acquisition of sequential pattern concepts (Simon and Kotovsky, 1963). There is also sufficient evidence to suggest that decision-making behavior can be successfully investigated in a number of empirical contexts. For instance, the decision behavior of individuals engaged in the solution of problems in logic (Newell, Shaw and Simon, 1957), geometry (Gelernter, Hansen, and Loveland, 1960), chess (Newell, Shaw and Simon, 1958), and portfolio selection (Clarkson, 1962), to mention but a few examples, can and have been used as the bases upon which to test the empirical validity of many of the hypothesized decision processes. This is not to say that all hypotheses of a particular theory of human decision behavior could be tested in each of these problem situations. Manifestly, some hypotheses will be peculiar to specific contexts. The presumption is, however, that a number of these hypotheses can be subjected to test in a variety of situations, and that this number is sufficient to guarantee the empirical testability of the resulting theory.

Implicit in this last statement is the further assumption that invariances exist in the structure of the decision processes of different

individuals. Indeed, it is assumed that these invariances not only exist but that they can be isolated, identified, and empirically confirmed. For example, the theory of human problem solving (Newell, Shaw and Simon, 1958) postulates the existence in an individual of a memory, some primitive information processes, and a hierarchy or program of decision rules. An application of this theory to a problem such as how humans acquire concepts of sequential patterns (Simon and Kotovsky, 1963) turns these postulates into testable hypotheses. This transformation is accomplished by specifying for the particular context the structure and contents of memory, the requisite information processes, as well as the order in which these processes are to be related to one another. Such a specification of the general theory is called a model of the behavior under consideration (Brodbeck, 1959). If it has been suitably constructed the model can account for the observed behavior. If it were not possible to represent the structure of these processes in information theoretic terms, then one could not transform these postulates into the testable hypotheses of a specific model of human decision behavior (Clarkson and Pounds, 1963). In effect, it is being argued that it is not possible to construct a testable theory of individual decision-making behavior unless such structural invariances exist among the decision processes of different problem solvers.

If, on the basis of the research already conducted, one can accept the statement that theories can be constructed which explain an individual decision behavior, then it is apparent that the first part of the reduction process has been accomplished. For, to have at hand a testable theory of individual behavior is to provide the empirical basis for theories of group and organizational behavior in the manner noted above. However, to complete the reduction process, some hypotheses or assumptions are required that will

permit one to take a theory of individual decision-making and infer from it the main components of a theory of organizational behavior.

To develop an information processing theory of individual behavior a postulate is employed that asserts the existence of structural invariance in the decision processes of problem solvers. But groups of all sizes are composed of individuals. Hence, the ability to infer from individual to group would be provided by a postulate that asserts the existence of invariances between the structure of individual and group decision processes. The basis of this posit -- which will be referred to as the second postulate of invariance -- resides in inductive and empirical grounds. It cannot be proved as a theorem. Indeed, the only grounds upon which it can be supported, other than by empirical test, is its consistency with the first postulate of invariance incorporated in the theory of individual decision-making behavior. Essentially, the postulate represents an appeal to parsimony as a rule of procedure. It is a suggestion that this is the appropriate way in which Occam's razor should be applied. Its theoretical value resides in the license it provides to interpret organizational theories in terms of an individual theory. Its empirical import can only be determined by the appropriate tests, to wit: does the application of this postulate permit a group's decision behavior to be explained by a theory of individual decision-making?

3. Interpersonal Influence and the Leader-Follower Relation[3/]

In order to discuss the processes by which the theory of group behavior proposed in this study accounts for interpersonal influence and the leader-follower relations, it is first necessary to describe some of the main components of an adaptive theory of individual behavior. To begin with, information processing theories represent the decision processes that generate observed behavior by what are called discrimination or decision nets (Clarkson and Pounds, 1963; Taylor, 1965). Such a net is an associated list of tests or filters through which information from memory or the environment passes. Each test or node in the net is the name of a process. And the behavior of the decision process itself is the result of the items in the net selecting and operating upon the received information. Since discrimination nets have an associative structure, and since decision processes can be represented by a sequential list of operations, decision behavior can readily be accounted for by such nets. It follows that to be able to identify a specific decision process one needs to know the contents of the tests in the net as well as the manner in which they are interconnected. Once this is known the behavior of the decision net is determined. For the observed behavior is a result of these processes acting upon the information provided by the memory or environment. Hence, a knowledge of the structure and contents of discrimination nets is vital to the explanation of observed behavior.

3/ The discussion in this section is indebted to the research on adaptive decision processes conducted by P. G. Eglinton part of which is reported in Eglinton (1965).

Consider, for a minute, a simple decision net as shown in Figure 1 where each test is resolved in a binary, yes or no, fashion. Suppose that each of the three tests performs separate tests on the available information

A Binary Decision Net

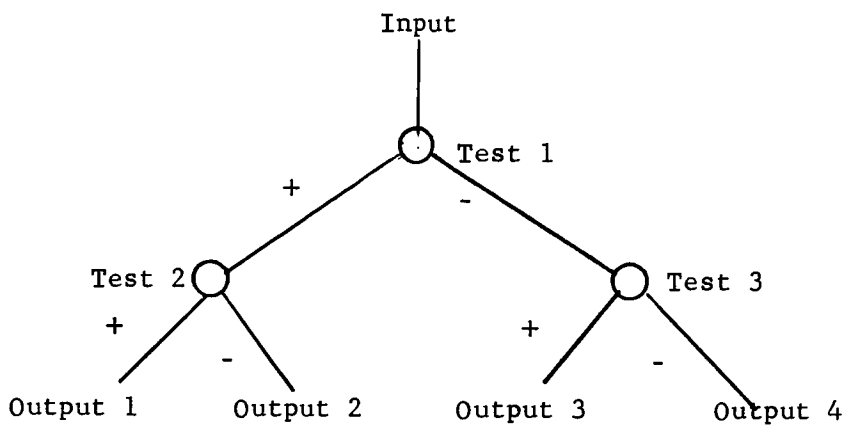

Figure 1

and selects outputs accordingly. Such a net will respond differentially to alterations in inputs. But without the addition of some external mechanism it is unable to reorder the sequence in which the tests are performed, add new nodes, or delete existing ones. In brief, the net in Figure 1 is not an adaptive mechanism, even though it is capable to generating different responses to a given stream of inputs.

To account for the observed growth, decay and general flexibility of human decision structures (Bruner, 1957; Miller, Galanter, and Pribram, 1960) it is necessary to incorporate mechanisms that permit change within discrimination nets to take place. Accordingly, as soon as an adaptive change of decision nets is considered, a higher level process is required to monitor the growth and collapse of the nets.

The model of the adaptive process that is used in this research consists of a Monitor and its attendant decision nets. The Monitor itself can

be represented by its decision processes. Its function is to effect changes in the decision structures that are under its control. In addition, the Monitor requires a set of well defined rules with which it is able to determine when the behavior produced by the operating programs (decision nets) does not satisfy certain criteria. A more complete model would have a hierarchy of Monitors, each one attending to the decision rules of the Monitor below it. For the purposes of this research, however, the simplest form, compatible with that which will achieve an explanation of learning behavior (Minsky, 1963), was selected. The model is shown in outline form in Figure 2.

An Adaptive Model

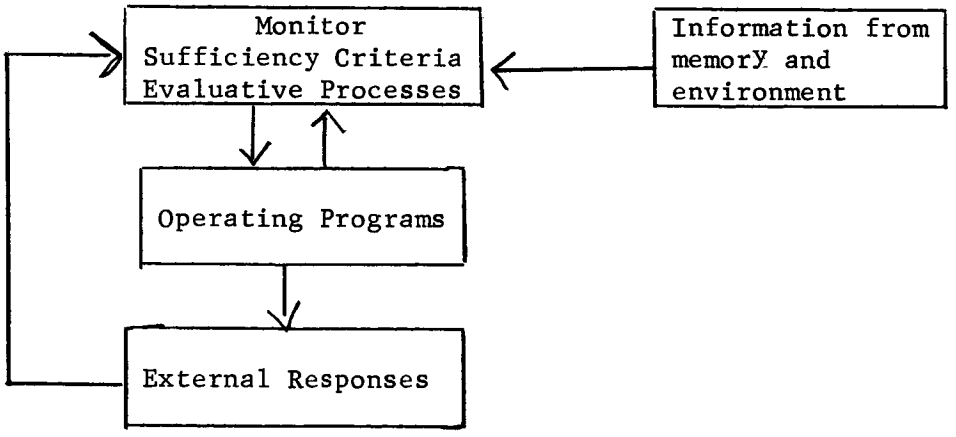

Figure 2

A Monitor as given in Figure 2 can contain a variety of evaluation mechanisms. These processes contrast the operating program's behavior with that desired by the Monitor's goals or sufficiency criteria. Though it would be possible to include a planning or look-ahead device at this

level (Hayes, 1965), such a process belongs logically to the next higher level. A planning level is not included here as the experimental environment (to be discussed shortly) reduced the usefulness of such a process to a minimum.

According to the adaptive mechanism depicted in Figure 2 alterations in operating programs take place as a result of actions taken by the Monitor. Viewed in this manner "learning" is a process of altering operating programs. Whether one is learning a new set of programs or how to apply an existing set to new tasks, much of what constitutes learning can be represented by the growth and collapse of decision nets.

When two or more individuals are required to form a group, such that the end result of their joint deliberations is a group decision, each individual's behavior as well as the group's decision becomes a part of the environment for each Monitor. Thus, if individual learning can be accommodated by these mechanisms, then so can what is known as interpersonal influence. Accordingly, in this research learning and interpersonal influence are treated in a similar manner. That is to say, both processes can lead an individual to change his operating program. And in accordance with the causal view of influence (March, 1952; Simon, 1957) to say that A has influenced B is interpreted by the model to mean A has effected an alteration in B's operating program.

In order to specify the procedures by which B can be induced to change his decision processes in response to some external event, one must delimit those processes which are activated by himself (individual learning and changing-one's-mind behavior) from those that are evoked by the behavior of others (interpersonal influence). The former are accounted for in the model by a set of Monitor processes that pertain solely to individual behavior. To account for the latter behavior, however, processes having to

do with the leader-follower relation dominance have to be introduced. For, though influence is defined to have taken place when B's net has undergone change in response to some action of A, the mechanism which selects B and not A to be influenced has to be included.

In studies of interpersonal influence (Blake and Mouton, 1961) one of the important variables appears to be that of stimulus and response generalization. Homans in Social Behavior proposes the following proposition to account for this behavior:

> "If in the recent past the occurrence of a particular stimulus-situation has been the occasion on which a man's activity has been rewarded, then the more similar the present stimulus-situation is to the past one, the more likely he is to emit the activity, or some similar activity, now." (1961, p. 53)

The essence of this proposition is incorporated into the model by permitting interpersonal influence between A and B to take place only when it is the second time that an influence attempt has been made by A to B in a similar stimulus-situation. A stimulus-situation is defined in terms of the outcomes provided by the experimental task. Hence, if the current outcome has occurred earlier, and if on that occasion A attempted to influence B's response, and if he does so again on the present occasion, then A will influence B -- B's net will undergo a change.

Nothing that has been said so far accounts for the leader-follower relation. That is, why and under what conditions can A influence B rather than the other way around? The answer to this question lies partly within the experimental task which was chosen as the testing ground for the theory. Though the task itself will be discussed shortly, one of its features is that it permits subjects to make their decisions in any fashion they choose. The decision procedures that they adopt can be classified on a risky-conservative continuum. Research on the effects of risk taking on group

decision-making (Kogan and Wallach, 1964) lead one to believe that group decisions are on the average more "risky" than those taken separately by the individual participants. However, such findings are confounded by the effect of social or local norms on group deliberations (Collins and Guetzkow, 1964). While the evidence is far from clear it appears that if in a given situation a "conservative" social norm exists then group decisions will tend in that direction. Further it appears from earlier work (Clarkson and Tuggle, 1966) that the experimental environment employed in this research evokes a conservative norm in subjects. As a result, for any pair of subjects, the model selects whether A or B is to be the leader on the basis of the conservativeness of their decision rules. Whether this rule is sufficient to account for the leader or dominance role for all pairs of subjects can only be determined by an examination of the test data. That it was observed to hold in previous research is an interesting fact. It does not establish, however, whether the conservative norm, if it exists, comes from a small, subject sub-culture or is more widely shared.

4. The Experimental Environment

Before describing the experimental task it would appear to be useful to recapitulate briefly the main propositions that are to be submitted to test.[4/] For to test each hypothesis certain observations must be generated by the experiment. A note will be made of these requirements as the propositions are discussed.

4/ The tests as well as the procedures involved are presented in detail in Chapters III, IV and V.

The principal hypothesis which has motivated this research is that a group's decision behavior with respect to a task can be explained from a knowledge of the decision processes of its individual participants. To test this hypothesis the experiment must provide data on the decision procedures of each subject with respect to the task prior to their taking part in a group decision. For a knowledge of a subject's decision behavior in a given task must be acquired before predictions about group behavior are made, if these predictions are to have any empirical content -- i.e. are to be capable of being disconfirmed. Accordingly, whatever task is chosen, it is clear that each subject must perform same for a certain number of trials to provide evidence of his decision behavior with respect to the task. A number of trials is required in order to produce sequentially linked behavior. As has been noted by other investigators, e.g. Bruner, Goodnow and Austin:

> "If behavior is to be viewed as strategy, the task of analysis can only be accomplished by devising experiments that can get a lot of sequentially linked behavior out of the organism where it can be observed." (1958, p. 243)

A second factor underlying this study is the desire to test the second postulate of invariance -- namely, to determine whether it is possible to explain a group's decision behavior by means of an adaptive theory of individual decision-making. To provide the requisite test data the experiment must be designed so that the decision processes of both individuals and groups can be readily elicited. Further, the data must be such that it can be discovered whether a theory that is sufficient to account for each subject's behavior is also sufficient to account for the resulting behavior of the group. A single or "one-shot" group decision on a specific task would not provide the desired data. The experiment must

also consist of a number of group trials on the same task that was used earlier. For, if an individual theory is able to account for the sequentially linked behavior of both individuals and groups, then it would appear that the second postulate of invariance has some empirical support.

To test the propositions that account for interpersonal influence some record is required of what each subject would like to do on each trial before a group decision is made. That is to say, if one had a record of each individual's private decision prior to the public announcement of same, then the effect of differences within the group on the subsequent behavior of each individual can be more accurately measured. Consequently, it would seem to be desirable to arrange the experimental procedure so that each individual writes down his decision in private before group discussion on that trial begins. Once there is a record of each individual's decision as well as the group's it is up to the hypotheses on influence to account for any changes in behavior that take place.

If one assumes that interpersonal influence takes place in a sequence of group trials, then at the end of same the decision processes of at least one individual will have changed. Or in terms of the model, if one compared the decision nets of an influenced subject from before and after the group trials, there would be some observable differences. Given these alterations it is then interesting to raise the question of whether this subject will continue, if permitted to make decisions by himself again, to exhibit influenced behavior. Putting the question another way: Will the decision net that represents his "before" or "after" behavior more closely account for his post-group decision behavior? To provide the data necessary for the resolution of this query a third sequence of trials similar to the first is required.

A. Experimental Task and Procedure

Experiments used in the development and testing of decision theories are frequently divided into two types: (i) those that elicit behavior which can be accounted for by static theories, and (ii) those which require dynamic theories to account for the observed behavior (Edwards, 1962). Though the distinction between these two types is not always clear -- a static theory can account for stationary states within a dynamic theory -- the experimental environments requiring dynamic theories can themselves be separated into two classes (Rapoport, 1966). The first contains experimental tasks where a subject's decisions do not affect the outcomes he is presented with. Forced choice tasks as are used in experiments on probability learning (Estes, 1959) and information seeking (Edwards, 1962) are examples of this sort. The second class consists of tasks in which a subject's decisions can and do affect the experimental outcomes he receives. Problem solving tasks where outcomes are dependent upon a subject's reaction to his environment are exemplars of same. The task used in this study belongs to the second category.

B. Method

To produce the data mentioned above the experiment is divided into three stages. In the first part (Stage 1) two subjects, after suitable instruction, are asked to perform the task by themselves. A complete record is kept of each S's decisions and the experimental outcomes he receives. At the end of Stage 1 both S's are brought together and are requested to perform the task as a group. Group decisions are to be mutually agreed upon. During the group decision phase (Stage 2) a record is kept not only of the group's discussion, decisions, and outcomes, but

also of each S's decision that he makes, privately, every trial, before announcing same to his colleague. The third part (Stage 3) is similar to the first in that S's perform the task once more in isolation from one another.

Thirty students drawn from the Graduate School of Industrial Administration and the senior class of undergraduates in Engineering at the Carnegie Institute of Technology were used as S's.[5/] No control was exercised when pairing S's into groups as to whether the individuals knew each other well or not. However, graduates were never paired with undergraduates and vice versa. Nor were other controls exercised over the selection of S's. S's were recruited on a volunteer basis with graduates being compensated for their time at an hourly rate.

The lack of control over the selection of S's was a deliberately chosen policy. For, if one takes the theory under test seriously, it states that a group's decisions can be predicted solely from a knowledge of the individual decision processes involved. Status variables were eliminated as much as possible by pairing S's according to the class they were in. But it was a part of the empirical test to see if the remaining social variables could be ignored and still be able to account for a group's decision behavior.

5/ Forty subjects were processed through the experiment, but in five groups (pairs of S's) at least one member chose to ignore parts of the instructions, thus making the group's data worthless. These date were discarded.

The experiment was conducted within the Behavioral Science Laboratory of the Graduate School of Industrial Administration at the Carnegie Institute of Technology.

C. Apparatus

For the entire experiment S's are seated on either side of a large table. (See Figures 3a and 3b). This table is divided, lengthwise, and has a moveable partition that is placed between the two halves. When in its highest position the partition prevents S's from seeing one another. The partition is placed in this position during Stages 1 and 3 (Figure 3a). It is lowered to a second position during Stage 2 (Figure 3b). An additional partition which remains in place throughout all three phases separates the experimenter who sits at one end of the table from both S's who are at either side.

Experimental Apparatus

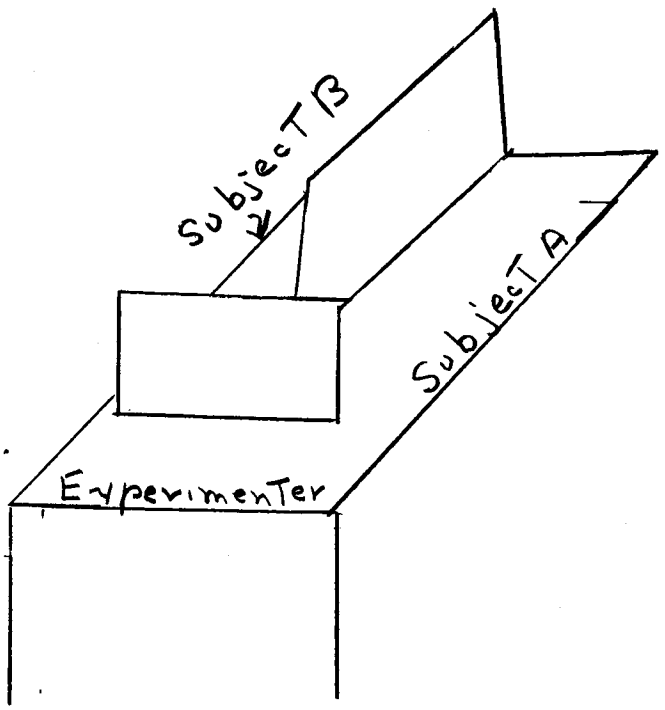

Figure 3a

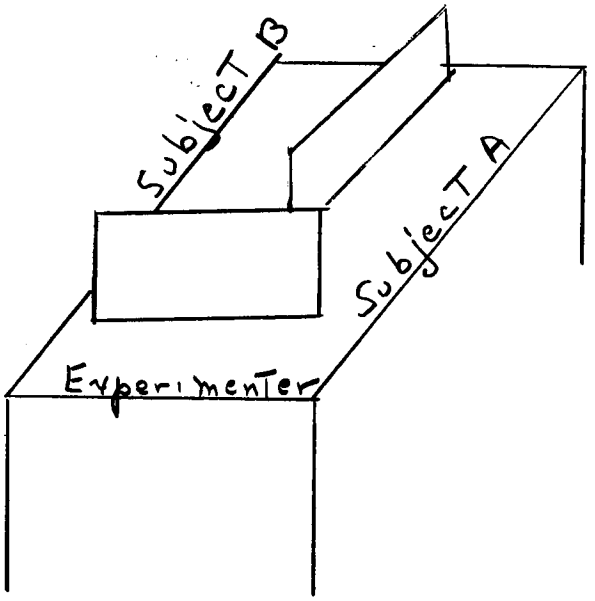

Figure 3b

Each S has a special form in front of him upon which he writes his decisions. These forms are passed to E for scoring, and then back to the S once every trial. Hence, the distance between E and each S has to be such that the handing back and forth can be readily carried out. During Stages 1 and 3 S's are isolated from one another and no talking is permitted. In Stage 2 they are allowed by the partition to see each other and to communicate freely. The partition is not lowered completely, however, as each S records his private decision on the form in front of him before discussion begins. Neither S must be able to see the contents of the

other's form. It is this line of vision that determines the height of the partition during Stage 2.

The remaining equipment includes the data forms themselves, a microphone, and a tape recorder with which to record the discussion that takes place in Stage 2.

D. Task and Procedure

The experimental task is an adaptation of one that was used originally in studies of individual problem solving behavior (Pounds, 1964). More recently it was employed in initial research on group decision behavior (Clarkson and Tuggle, 1966). The task requires S's to make a sequence of bids -- i.e. decide upon a series of prices -- in two separate and independent markets.

At the beginning of the experiment the two S's, seated on either side of the table as in Figure 3a, are presented with a form (data sheet).[6] which contains two numbered columns of blank spaces. (See Figure 4). The only exception is in the first row. Here two prices are entered, one for each market, and circles are drawn around them denoting that both bids have won. Instructions that describe the task are then read to the S's. They contain, in brief, the

6/ Examples of the data sheets used in all three Stages are provided in Appendix.

Excerpt from a Data Form

Trial No.	Decision	Decision
1	$2.00	$2.00
2	_____	_____
3	_____	_____
4	_____	_____
5	_____	_____
.	.	.
.	.	.
.	.	.

Figure 4

following points:7/

A trial consists of making two bids in terms of dollars and cents, one for each market. The bids are to be entered on the blank spaces provided on the data sheet. S's are informed that the markets are competitive and that they are bidding against two series of prices which reflect this situation. In addition they are told that the actual market prices against which they are bidding are recorded on a sheet which E has in front of him.

A "win" is achieved by submitting a bid that is lower on that market than the corresponding price on E's list. Either one or both bids can win on any given trial. At the end of each trial S's are asked to hand in their forms to E. He compares their bids against his prices for that trial, and marks which have "won" and which have "lost" by drawing a circle around those that won. E then passes the scored forms back to the S's. Thus, S's are informed of the outcomes of their bids at the end of each trial.

7/ The complete set of instructions that are used before each Stage are given in Appendix.

It is suggested to S's that they think of themselves as earning profits in proportion to the numerical value of their winning bids. Further, they are asked to regard the sum of such profits over a series of trials as a measure of their performance in the experiment. They are asked to make their decisions in such a way as to make their "performance earnings" as large as possible.

Though there is no limit on the prices S's can choose, there are two important limitations on their bidding:

i) They are required to alter one, and only one, of their bids on each trial. They can change which one they wish, but one price must change and one must remain unchanged for that trial.

ii) All alterations in bids are to be made by adding or subtracting $0.15 from the price to be changed.

These are the points covered by the general instructions. Before proceeding to those read prior to each Stage, a modest digression is due on the method by which E scores wins and losses on S's data sheets. E, as mentioned in the instructions, does in fact have a list of numbers, one for each market, in front of him. Further he also complies with the instructions and compares, trial by trial, the prices submitted by each S against the corresponding prices on his list. Prices that are lower than his are declared wins and he draws a circle around them in the prescribed manner. The part that differs from what S's are told is that E's numbers are not drawn from a list of bids produced by some other market. Instead, the two lists are generated by independent draws from a normal distribution with a mean of $2.00 and a standard deviation of $0.50. Though the choice of moments is arbitrary, it should be noted that in previous research (Pounds, 1964; Eglinton, 1965) various means and

standard deviations were employed with no noticeable effect observed in S's decision behavior. The increment of $0.15 (noted above) was chosen to make changes in bid prices fit in with these moments. And, as is mentioned in the instructions, S's are started off with an opening bid of $2.00 (the distribution mean) on each market. (See Figure 4).

As soon as S's have declared that they understand what has been said so far and are ready to proceed, the instructions for Stage 1 are read. They are as follows:

> "The first part of the experiment consists of 35 trials or pairs of bids. Subject to the restrictions mentioned before, you can bid in any manner you choose. But do not forget that your objective is to make your performance earnings as large as possible.
>
> "To indicate the approximate dollar value of the markets an opening bid of $2.00 on both markets as well as whether they won or lost, is provided on your form. Your task is to decide upon which bid to change for the next trial, and so on for the remaining trials.
>
> "After you have made your decision on each trial hand your form to me so that I can mark whether your bids have won or not.
>
> "If there are no questions you can begin."

At the end of Stage 1 S's hand in their completed data sheets. They are invited to remain seated and take a short break before going on to the next Stage. No talking has been allowed since the last instruction was read, but once the partition is lowered to its second position (Figure 3b) S's are free to communicate with one another. During the short interval (two minutes) E turns on the tape recorder and presents S's with a new data sheet. This sheet differs from the previous one in that there is one column of blank spaces headed My Decision and another beside it headed Group Decision. (See Figure 5).

Excerpt from Group Data Form

Trial No.	My Decision	Trial No.	Group Decision	
1		1	$2.00	$2.00
2	_____	2	____	____
3	_____	3	____	____
4	_____	4	____	____
.	.	.	.	.
.	.	.	.	.
.	.	.	.	.

Figure 5

The first pair of bids under the Group Decision column has the starting prices of $2.00 filled in plus whether these bids have won or lost. The instructions for Stage 2 are as follows:

"Both of you have now made bids for 35 trials. In this part of the experiment you are to bid together for a sequence of 30 trials.

"You will notice that the form for this part of the experiment differs slightly from the one you were just using. On all trials, each of you is to write down what bids you would like to make under the column My Decision. You will then tell each other what you have written down and proceed to reach an agreement on what bids to make. The bids you agree upon are to be recorded by each of you on your form in the usual way under the column Group Decision. Both of you will then hand in your sheet so that I can draw circles around the winning contracts. Since both of you will know whether the group's bids have won or lost, there is to be no talking at the beginning of a trial until each of you has written down what you want to do next.

"You are playing on a continuation of the same market, and all bidding rules are the same as before.

"If there are no questions, you can begin."

At the end of Stage 2 the completed data sheets are collected and there is another short break. (two minutes). During this period, the tape recorder is shut off and the partition is raised to its former position (Figure 3a). Forms identical to those used during Stage 1 are handed out with the first trial filled in with the $2.00 bids and their outcomes. It is worth noting at this point that the experimenter uses a different series of random numbers, drawn from the same population, for each market as well as each Stage. Hence, though the data sheets always have opening bids of $2.00 in each market, whether they are wins or losses changes for each Stage. In particular, S's begin Stage 1 with a win on both $2.00 bids, Stage 2 with a win on the left and a loss on the right for the first group bid, and Stage 3 with a loss on the left and a win on the right.

The instructions for Stage 3 are as follows:

"The final part of the experiment consists of your bidding by yourselves for 30 trials.

"You are playing on a continuation of the same market and the bidding rules are the same as before.

"If there are no questions, you can begin."

To recapitulate, the recorded decision behavior at the end of the experiment consists of the following: On all trials in Stages 1 and 3 for each S there are two prices stated in dollars and cents with the appropriate marks as to whether these bids won or lost. In Stage 2 on each S's form there are two columns of prices, the first records the private decision taken before group discussion, the second being the agreed upon group bids. Only the group's bids are scored for wins and losses.

The experiment was designed to meet certain criteria. The first is that it produce sequentially linked decision bahvior. It is clear that the quantity of such behavior which can be generated in this experiment is limited

only by the willingness of S's and the general constraints of time and money. The second point to note is that task outcomes, the wins and losses, are in part determined by the S. During Stage 1 S's quickly learn that to raise prices increases the likelihood of a loss and vice versa. Furthermore, there is no bounded set of strategies which can be called "correct." Any method of choosing bids will satisfy the general requirements. Though not all decision rules are equally rewarding in a monetary sense, S's are free to behave as they see fit. Lastly, it was desired to obtain data on group decision-making where concurrently data were available on each individual's decision behavior with respect to the same task before, after, and during the group decision phase. Stages 1, 2 and 3 of the experiment generate these data.

Chapter II

Model of the Group Decision-Making Process

From the description of the experimental procedure it should be apparent that the primary objective of this research is to be able to explain the data generated during Stage 2 from a knowledge of the individual behavior exhibited in Stage 1. (The data of Stage 3 are used to test the permanence of such alterations in individual decision processes as take place in the group decision phase. This test, while interesting, is of secondary importance. Accordingly, both data and tests pertaining to the third Stage are treated later on in Chapter V).

The model that is proposed to account for Stage 2 behavior is quite straightforward and states: The behavior of a group is a direct consequence of the interaction of the decision processes of its participants. In other words, given a model of each S's decision behavior -- i.e. a statement of the decision rules that are capable of reproducing the behavior exhibited in Stage 1 -- a group's behavior is an end product of the interaction of these two collections of decision processes. Accordingly, the model of a group's decision behavior is composed of one model for each S in the group. Since this study is concerned exclusively with the behavior of dyads, the group model consists of two individual models each of which represents the behavior of one particular S.

In order to explicate the inner workings of the individual model it is necessary to define clearly each term and mechanism that is used. The first item of importance is what is meant by the observable behavior itself.

Both an individual's and a group's decision behavior consists of

the sequence of events which is recorded on their forms in Stages 1 and 2. An example of each is provided in Figure 1. If one recalls the bidding instructions -- to wit, opening bids of $2.00 on each market are provided, only one price can be altered per trial, and changes in bids are to be made in increments of $0.15 -- all changes in bids can be readily abstracted into the following four responses: Increase the Left market (IL), Increase the Right market (IR), Decrease the Left market (DL), and Decrease the Right market (DR). Thus, any sequence of bids can be transformed into a sequence of responses that represent the changes that took place, as in Figure 2.

Example of an S's bidding behavior in Stage 1

Trial No.	Decision	Decision
1	2.00	2.00
2	2.15	2.00
3	2.15	1.85
4	2.15	2.00
5	2.15	1.85
6	2.30	1.85
7	2.45	1.85
.	.	.
.	.	.
.	.	.

Example of an S's bidding behavior in Stage 2

Trial No.	My Decision		Trial No.	Group Decision	
1			1	2.00	2.00
2	2.00	1.85	2	2.00	1.85
3	1.85	1.85	3	1.85	1.85
4	1.70	1.85	4	1.70	1.85
5	1.70	2.00	5	1.70	2.00
6	1.70	2.15	6	1.70	2.15
7	1.85	2.15	7	1.85	2.15
.	.		.	.	.
.	.		.	.	.
.	.		.	.	.

Figure 1

Response Sequence for an S's Stage 1 Bids

Trial No.	Decision	Decision	Response Sequence
1	2.00	2.00	
2	2.15	2.00	IL
3	2.15	1.85	DR
4	2.15	2.00	IR
5	2.15	1.85	DR
.	.	.	.
.	.	.	.
.	.	.	.

Figure 2

An S's behavior can therefore be described in terms of the responses he makes to the particular situations he finds himself in. Accordingly, for every trial -- i.e. every market situation (outcome on both markets) encountered in the 30 trials -- a group's decision behavior consists of

the response made by each S plus the response decided upon as their collective choice. It is these three sequences of responses that are taken by the model as the behavior to be explained.

Having defined what constitutes the observable data it is now time to present the model and all its constituent parts. To describe a moderately complicated model, however, presents a number of difficulties. For the interrelatedness of many of the processes makes a neat, item by item explication hard to impose upon the model as well as awkward for the reader to follow. Similarly, flow charts of major decision processes, while informative, are only a partial answer to the problem of how to communicate the way in which a model behaves. Manifestly, the actual computer program that describes a model in complete detail is the least informative to the untutored reader. For, unless the reader has expert knowledge both of the computer language used and of the structure of the processes described, the program itself provides an overwhelming enumeration of particulars out of which it is exceedingly difficult to make coherent sense. Nevertheless, the program is the model; it is the empirical interpretation of the theory. And if the contents of the theory are to be properly understood the vehicle (model) by which it is empirically specified must also be intelligible. To assist in the comprehension of the model the discussion of each component will begin with a brief restatement of the relevant part of the theory. This will be followed by a description of the model's interpretation of these statements. Diagrams, flow charts, and examples will be used with moderate frequency in an endeavor to help clarify the prose.

1. The Basic Postulates

The main postulates of the model are derived from earlier information processing theories of individual behavior.[1/] That postulates about individual behavior are appropriate for a model of group behavior should be readily apparent from the discussion in the previous section. The theory of group decision-making that is proposed here is a theory of individual behavior which can account for interpersonal relations. Since this research is concerned with dyads, the model of a group contains two individual models. Hence, the postulates of the group model are those that form the basis for the model which represents an individual's decision behavior when acting as a member of a group.

The model of group decision behavior posits that each member can be represented as having:

1) A memory that contains information on the actual prices bid and the outcomes obtained for all past trials during a particular Stage in the experiment. Since each S has these data in front of him on his form, to represent the model's memory as having this information available to it does no violence to the actual situation.

1/ These postulates were first stated by Newell, Shaw & Simon (1958) and subsequently have been employed in the construction of a number of theories (e.g. Feigenbaum, 1963; Simon and Kotovsky, 1964; Clarkson, 1962; Reitman, 1965). The postulates as applied to the model of group behavior were investigated by Eglington (1965).

2) Search and Selection procedures that are capable of examining the contents of memory -- i.e. looking back over previous trials -- in order to generate the values of the attributes required at that time by the decision processes.

3) A set of rules and criteria that guide the decision-making process by stipulating when and how each decision process is to be used or altered. This set of rules is divided into two parts:

   (i) A structure of decision processes (discrimination nets) that permits the model to generate responses to particular environmental conditions -- i.e. the decision processes that transform stimulus inputs into bidding responses.

   (ii) A Monitor that has its own decision rules and criteria which specify the conditions under which the discrimination nets themselves are to be altered as a consequence of novel stimuli or interpersonal differences. The Monitor controls the growth and collapse of the discrimination nets.

Although it might, at first, seem reasonable to discuss the model's specification of these postulates in the order given above, the empirical interpretation of the first two is dependent upon the processes delimited in the third. In short, a complete specification of the Monitor and the structure of the decision nets defines, to a large extent, both the required contents of the memory and the processes to be used in search and selection. Accordingly, these items will be treated in the reverse order.

2. The Monitor

The Monitor's task is, in essence, to attend to the environment, which in the group situation includes the behavior of the other S as well as the responses being produced by the decision processes under its own control. When, according to its criteria, the decision rules are not behaving in a satisfactory manner the Monitor effects the requisite alterations. How and by what procedures such changes are made as well as what constitutes the Monitor's criteria are the subjects of this section.

In order to describe how a discrimination net is altered by the Monitor it is necessary to have some idea of what these nets are like. Although it is the function of the next section to explicate the genesis and development of each S's decision rules, a rudimentary description of their structure and form is required here.

If one reflects upon the experimental task for a minute it is apparent that all pairs of bids generate four possible classes of outcomes -- a Win on both markets (W W), a Win on one market and a Loss on the other (W L, or L W), or a Loss on both markets (L L). Thus, the immediate stimulus-situation at the end of each trial can be represented by the four attributes, W W, W L, L W, L L. Accordingly, an S's responses to these stimuli can be represented as the end result of passing down the particular branch of a net which has the stimulus-situation as a top level node or test. In Figure 3, a very simple net is presented in which these four situation attributes are the only tests applied to the input information. Each node has a positive and a negative branch. Hence, depending upon the situation that prevails on a given trial (e.g. the input information) the net will sort this information to one of four classes of responses. Though the responses attached to each node in Figure 3 are not all single valued, they can be made so by the addition of further attributes (discriminators). Two such attributes might be "Was the previous bid change

A Simple Decision Net

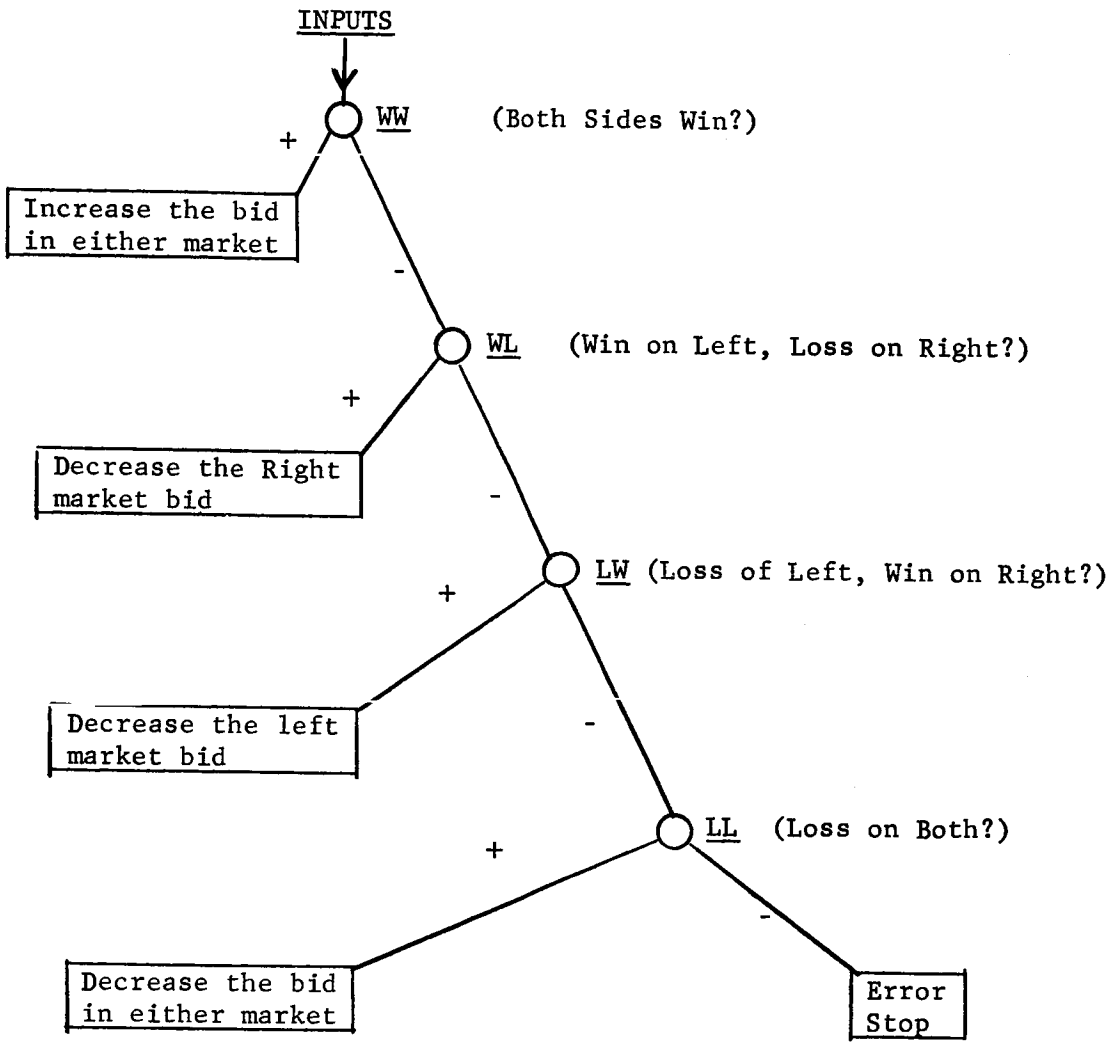

Figure 3

made on the left market?" and "Was the previous bid change an increase in price?" Representing these two attributes by the symbols S/L and INC. respectively, and the set of possible responses by IL, IR, DL and DR the net in Figure 3 can be altered to that of Figure 4.

A Simple Decision Net Expanded

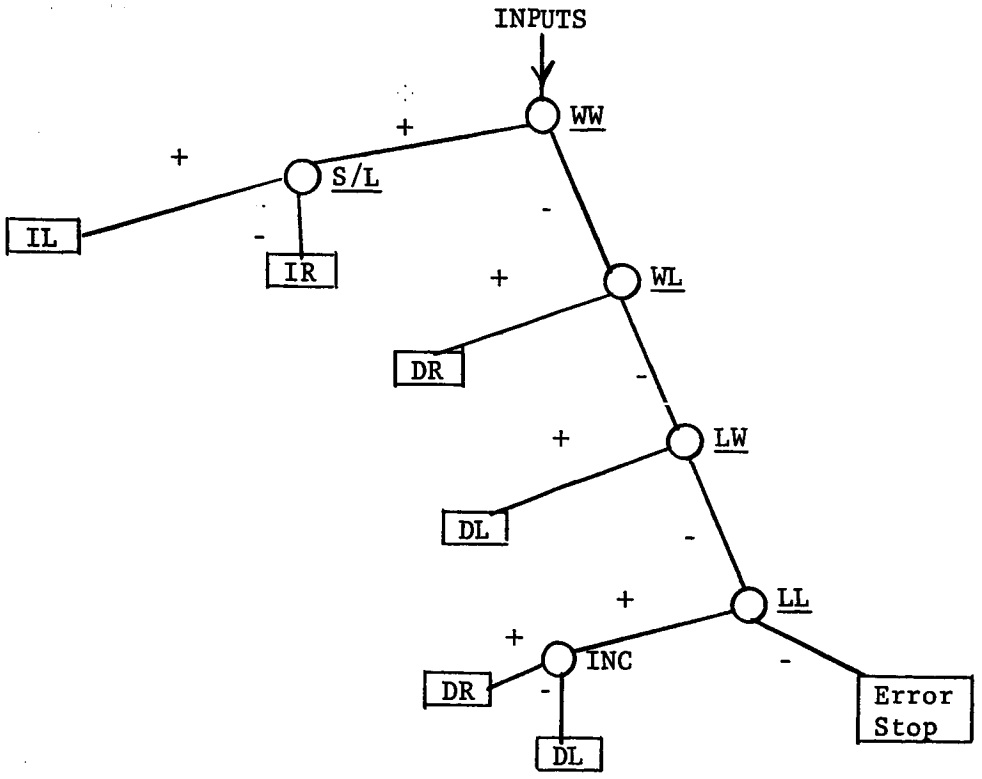

Figure 4

The net in Figure 4 not only has a unique set of responses attached to the terminal nodes, but it also makes a more detailed examination of the input information. For in the W W condition it now states that the stimulus-situation consists of a win on both markets plus whether the last bid change was made on the left market. Similarly the stimulus-situation for L L is the market state of losses on both markets plus whether the last bid change was

an increase. Manifestly, for a given market state a larger range of responses can be provided for by adding still further nodes to the net.

Consider, for example, the part of the net given in Figure 5. Here the stimulus-situation that leads to a response of an Increase in the Left market bid is given by the conjunction of having increased the bid on the left market on the previous trial and by having the outcome of this bid be a win on the left and a loss on the right.

Part of Net Showing Multiple Nodes

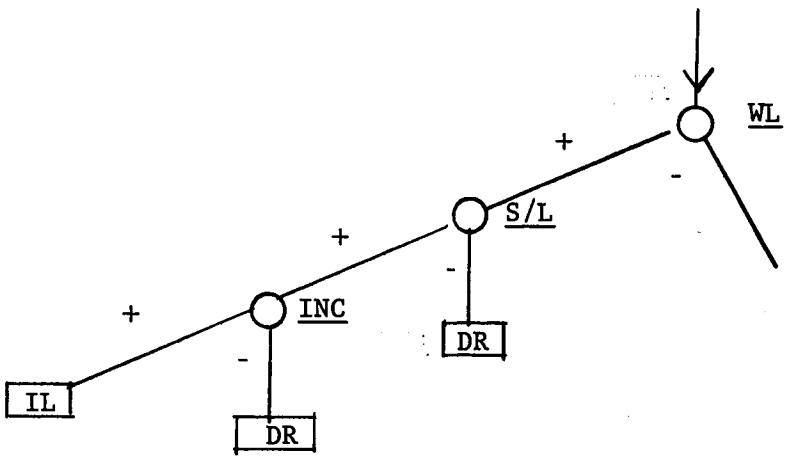

Figure 5

In Chapter I it was stated that changes in behavior due either to learning or interpersonal influence were to be represented by alterations to decision nets. Such a procedure implies that the Monitor has to be able to add nodes to accommodate new responses. To make such additions the Monitor requires a mechanism which will provide it with suitable attributes. Hence, a brief discussion is due on the attributes themselves.

(a) The Attributes:

When the Monitor decides that the behavior of a particular decision net is unsatisfactory it alters same by adding a new node and response to the appropriate spot in the net. Moreover, if the new node is to function as intended, the node itself must represent a relevant portion of the stimulus-situation. For, if in Figure 5 the Inc node had been an S/L node such that there were now two of these nodes in sequence, the resulting definition of the stimulus-situation would be absurd. In brief, a mechanism is needed which permits the Monitor to classify the actual market situation in terms of relevant attributes.[2/]

The model solves this problem by providing the Monitor with a specific list of possible attributes. These attributes are organized in an hypothesized noticing order. That is to say, the attributes (described below) are placed on the Monitor's list in the order in which it is hypothesized S's will notice these characteristics of the market situation. The attributes refer to three classes of events: i) The current state of both markets in terms of wins and losses, (ii) the nature of the previous change in bid, and (iii) the sequential nature of the outcomes of several prior trials. These attributes, with the symbols by which they will in future be referred to, are listed in order as follows:

Current Market State Atrributes

Win on Left and Win on Right	W W
Win on Left and Loss on Right	W L
Loss on Left and Win on Right	L W
Loss on Left and Loss on Right	L L

2/ For further discussion on the classification of inputs see: J. B. Bruner "On Perceptual Readiness," Psychological Review, Vol. 64, 1957, pp. 123-52.

Previous Change Attributes

Side of previous change, Left	S/L
Direction of previous change, Increase	Inc.
Relative size of bid on left vs. right, $L \geq R$	R.B.S.

Sequential Market State Attributes

Consecutive Wins on the Left	Ws/L
Consecutive Wins on the Right	Ws/R
Consecutive Losses on the Left	Ls/L
Consecutive Losses on the Right	Ls/R

Of this list the only members which have not yet been described are the Relative Bid Size attribute and those dealing with Consecutive Wins or Losses. The former is a relevant characteristic of the market situation when the bid price on one market is greater than that of the other. Once it is a part of a discrimination net it will permit the node to branch positively if the left price is greater or equal to the right market price.

Consecutive wins or losses exist when three or more of the same outcomes have occurred in sequence, including the most recent, on either of the markets, provided that the other market does not have an equally long or longer run of the same outcome. For the list of outcomes given below it is clear that there is a run on wins on the left. Thus, if the Monitor

W L
W W
W W
W L

attempted to discover whether Ws/L was a relevant attribute of the current trial the answer would be, Yes. The same would be true of Ls/L if the wins were replaced by losses. However, if the list of outcomes was given by

L L		W W
W W	or	L L
W W		L L
W W		L L

none of the Sequential Market State attributes would be relevant.

(b) The Criteria

It has already been mentioned a number of times that the Monitor's function is to adjudge the behavior of the discrimination nets under its control. To do so it requires sufficiency criteria which will indicate when alterations are to be made. In order to describe the criteria, however, a further discussion of the properties of S's decision rules in this task is required.

Revert back, for a minute, to the decision net shown in Figure 4. If this net in fact represented someone's decision behavior, and if this behavior never changed over a long sequence of trials, then it would be possible to compute the long run frequency of wins or losses such a net would generate. For in W W situations it will raise a bid and in all other cases lower one. And since the increment is constant and outcomes are determined by a comparison with numbers drawn from a normal distribution of given mean and variance, the long run frequency of wins can be computed as follows:

Let the probability of a win on one of the bids per trial be given by P. Then it is the case that:

$$P^2 = 2\,[(P(1 - P))] + (1-P)^2$$

The solution of this equation is P = .71. Accordingly, for the decision net of Figure 4 we would expect it to generate approximately 70% wins in any long series of trials.

It follows from the analysis that it is possible to compute the frequency of wins expected from any stable decision net. A corollary of this

result is that the frequency of wins produced by an S's decision processes in this experimental environment is an important summary characteristic of his discrimination net.

This finding is supported by a variety of experimental evidence. In earlier research within a roughly similar environment.[3/] it was demonstrated that one could effect significant changes in an S's decision processes as well as his bid prices by altering the method by which the win-loss outcomes are generated. If S's are presented with a task as given in Stage 1, and if after 30 trials the experimenter now selects outcomes on the basis of a randomized list of wins and losses with a given frequency of wins, then by the appropriate selection of the win frequency S's can be made to raise their bids, leave their bids more or less as they are, lower their bids, or lower their bids and alter the way in which they choose their bids. The controlling variable is the correspondence between the frequency of wins generated by S's when bidding against actual numbers and the frequency of wins provided by the randomized list of outcomes. If these two frequencies are approximately the same S's are unable to detect the change that has taken place. If the frequency of wins provided by the experimenter is greater than that previously experienced, S's raise their bid prices in what appears to be an effort to keep the proportion of wins roughly constant. Conversely, if a lesser proportion of wins is provided by the experimenter, S's lower bids. Moreover, if such behavior does not produce the desired level of wins, S's become noticeably upset and may cease to bid altogether or begin trying out radically different methods of

---

3/ A detailed discussion of the experimental findings is presented in P. G. Eglington, op. cit.

generating bids.[4/] Manifestly, this is not the first time that it has been observed that S's are sensitive to changes in frequencies of rewards in experimental environments.[5/]

The Monitor incorporates this evidence of S's sensitivity to win frequency in the following hypotheses:

(i) S's attend to the frequency of wins generated by their decision processes.

(ii) The frequency of wins obtained by each S during the latter trials of Stage 1 is an estimate of the long run proportion of wins that would be generated by these nets if sufficient trials were permitted.

(iii) Each S during Stage 1 develops a concept of what is an acceptable level of wins.

(iv) Significant alterations in the actual proportion of wins are responded to by making suitable changes in the decision nets.

As will be seen in a moment, these hypotheses are sufficient to permit the Monitor to regulate the behavior of its decision nets. Whether these hypotheses are adequate representations of S's behavior can only be determined by empirical test -- a subject to which Chapters III and IV are devoted.

4/ It should be noted that each of these effects can be produced on each market as well as on both taken together. In brief, one market's price can be made to rise while the other is lowered.

5/ See for example: Bruner, Goodnow & Austin, (1957, p. 189)

The Monitor turns these hypotheses into working mechanisms in the following manner. First, the actual frequency of wins obtained by an S in the last ten trials of Stage 1 is computed for each market. This proportion is called the Monitor Frequency for each market. Second, the actual proportion of wins obtained by the group's bids is computed to yield a measure called the Actual Frequency for each market. The Actual Frequency is generated by examining the outcomes of the last five trials only. It is always updated and is in effect a moving proportion.[6/] Third, a significant alteration in the actual proportion of wins occurs when the Monitor Frequency differs from the Actual Frequency by 20% or more in either direction -- i.e., a significant alteration is defined by

$$\left| \text{Monitor Frequency} \right| - \left| \text{Actual Frequency} \right| \geq 0.20$$

An example. Suppose that subject A's Monitor Frequencies are 0.8 for the left market and 0.5 for the right. That is to say, in the last ten trials of State 1 his record of wins is eight on the left and five on the right. Suppose further that the sequence of group bids and outcomes for the first seven trials are as shown in Figure 6. Here, differences exist when the left are below and the right are above the Monitor Frequency.

6/ During the first five trials of Stage 2 this rule is replaced by one which begins at the third trial and adds one each time until the fifth trial is reached.

Comparison of Actual and Monitor Frequencies

Trial	Group Bids		Actual Frequency		Subject A's Monitor Frequency		Significant Difference	
1	2.00	2.00						
2	1.85	2.00						
3	1.70	2.00	.33	.66	.80	.50	Yes	No
4	1.70	1.85	.25	.75	.80	.50	Yes	Yes
5	1.55	1.85	.20	.80	.80	.50	Yes	Yes
6	1.55	2.00	.20	.80	.80	.50	Yes	Yes
7	1.40	2.00	.40	.80	.80	.50	Yes	Yes

Figure 6

If win frequency were the only variable of importance, then the column of Significant Differences could be used directly as the trigger for whatever changes are required in the decision nets. However, S's also pay attention to the actual bid prices themselves. In particular, they appear to develop a notion of the market "trend"[7] -- i.e. whether the market prices they are bidding against appear to be rising or falling. Since S's are told that the markets are independent it is not surprising that S's discriminate between the apparent trends on the left versus the right market.

To accommodate this observed behavior the Monitor computes a Trend variable for each market. The determination of a Trend value -- denoted by a "Yes" or a "No" with a mark as to direction "Up" or "Down" -- does not begin until the seventh trial. The computation proceeds as follows:

(i) Take the previous seven trials (the number seven is chosen as the hypothesized number of trials an S will look back over to determine trend) and compute the average prices for the first and last pair of trials, i.e. trials

7/ For further details see P. G. Eglington, op. cit.

1 and 2 and trials 6 and 7. Using the data of Figure 6, for the left market these average prices are $1.975 and $1.475 respectively.

(ii) The difference between these two averages is taken and both the actual value and sign are noted. In this case the value is — .50.

(iii) Net, the sum of the increments for these trials is computed by adding the absolute values of these changes. For the data given above the sum of the increments for the left market is 0.60. (iv) A Trend exists if the difference determined in (ii) is greater or equal to four-fifths of the value of the sum of the increments given in (iii). (v) The Trend is Increasing or Decreasing depending on the sign of the difference in (ii). Employing the numbers noted in (ii) and (iii) we see that $-.50 > (.8)(.60)$. Accordingly, on the left-hand market in Figure 6, at the seventh trial there is a Decreasing Trend.

Note, that if the left bid on trial seven had been equal to or greater than 1.55, then the result of the above computation would have been No Trend. An example of a No Trend is provided by the bids in the right market. If the reader wishes to test the sensitivity of the Trend computation he will quickly see that the key lies in the difference between the average of the first and last pairs of bids. For unless this difference is great enough, signifying a steady change of price in one direction, four-fifths of the sum of the increments will be greater than this difference.

The Monitor employs the values of the Trend variable to modify the determination of differences between Monitor and Actual Frequencies. Though significant differences may well exist, as in Figure 6, the value of the Trend variable can nullify these differences. To understand the operation of this procedure it must be remembered that the Monitor's function is not only to determine when changes in the decision nets are required but also to

specify the alterations to be made. Accordingly, differences between Monitor and Actual Frequencies and Trend values are denoted in terms of the decision net's responses that are inappropriate under the given condition. Inappropriate responses are called Violations. Hence, the rules about to be discussed determine for each S, on each trial which, if any, responses would violate the hypothesized schema by which his desired frequency of wins is maintained.

The rules governing the determination of response violations for each market are as follows:[8/]

(i) If Actual Frequency > Monitor Frequency and Trend is Increasing, then any response is permissible.

(ii) If Actual Frequency > Monitor Frequency and there is No Trend or the Trend is Decreasing, then a Decrease in bid price is a Violation.

(iii) If Actual Frequency = Monitor Frequency, then any response is permissible.

(iv) If Actual Frequency < Monitor Frequency and Trend is Decreasing, then any response is permissible.

(v) If Actual Frequency < Monitor Frequency and there is No Trend or the Trend is Increasing, then an Increase in bid price is a Violation.

To illustrate the behavior of these rules consider the date pertaining to the seventh trial in Figure 6. For the left market the Actual Frequency is less than the Monitor Frequency. At the same time, the value of the Trend variable is Increase. By applying rule (v) it follows that an Increase on bid price for this trial would constitute a violation. That is to say, the response IL is considered by the Monitor to be a violation. On the right market, however, the Actual Frequency is greater than the Monitor Frequency Since there is No Trend, rule (ii) applies and the response DR is declared

8/ To be significant differences in frequencies must be $\geq 20\%$.

a violation. Clearly, if the Trend value had been Increase, then either of the responses JR or DR would have been permissible.

The model keeps track of these procedures by placing the values of these variables on lists which are part of the Monitor for each S. The relevant values are computed each trial so that during group decision trials each S's Monitor has a Monitor Frequency List, an Actual Frequency List, a Trend List and a Violation List, on which the appropriate values are recorded for the left and right markets. They are the values of the variables which when conjoined with the decision rules define the criteria employed by the Monitor to adjudge the responses produced by its discrimination net.

(c) Learning, Self-Influence, and Changing-One's-Mind

In this model all changes in an individual's decision behavior that are effected to accommodate his own desires are represented by one process -- the Self-Influence Process. It could easily be argued that such alterations might be more accurately broken down into three processes -- namely, learning, self-influence and the phenomenon of changing-one's-mind. To treat these processes separately it would have to be possible to distinguish operationally the observable behavior indicative of each. As yet it is not clear how to do this in the context of this experimental environment. As a result, the model adopts the simplification that all changes induced by an individual upon himself can be represented by one set of procedures.

Self-influence occurs when the response proposed by an S's decision for a particular trial is found on his own Violation List. If on trial n individual A's decision net produces a response which is defined by his Monitor as a violation, then this situation evokes the self-influence process. Such a sequence of events can take place in Stage 2 if the proportion of wins generated by the group's bids are not in keeping with the criteria of A's Monitor.

Consider the situation presented in Figure 7 where subjects A and B are considering what bids to make for the tenth trial. The market state at trial 9 is WL. After processing the information about this trial through the relevant portion of his decision net A produces the response DR -- i.e. decrease the right bid for trial 10 which implies the bid price of $1.85 on both markets. However, the Monitor notices that the response DR is a violation. For on the right market Actual Frequency > Monitor Frequency and Trend is not increasing. Hence, the value Decrease is on the Violation List for the right market. In short, the situation is such that although A's decision rule suggests the response DR, A is represented as being unwilling to make such a move as it would in all likelihood lead to an increase in the frequency of wins on the right market. The situation A is trying to prevent.

Comparison of A's and Group's Responses

Trial	A's Decision		A's Monitor Freq.		Group Decision		Actual Freq. of Group	
.	.	.	.	.	.	.	.	.
.	.	.	.	.	.	.	.	.
.	.	.	.	.	.	.	.	.
8	1.70	2.30	.80	.50	1.70	2.00	.80	1.00
9	1.85	2.00	.80	.50	1.85	2.00	.80	.80
10								

Figure 7

The Monitor notices the violation and proceeds to effect a change by employing the Self-influence procedure. This procedure operates by presenting alternative responses to A's Monitor for its consideration. The alternatives themselves are taken from a list of responses that are appropriate for

each market state.[9] Thus, for trial 10 the alternative response IL would be suggested. The Monitor considers such alternatives in the same way it considers all responses. It examines whether it appears on the Violation List. If the suggested response is also a violation, then no action is taken and the initial response stands as the one to be made for this trial. If it does not appear on the Violation List, then the new response is accepted and Self-influence takes place to make that response a part of A's decision net. A flow chart of this procedure is given in Figure 8.

Self-Influence Decision Procedure

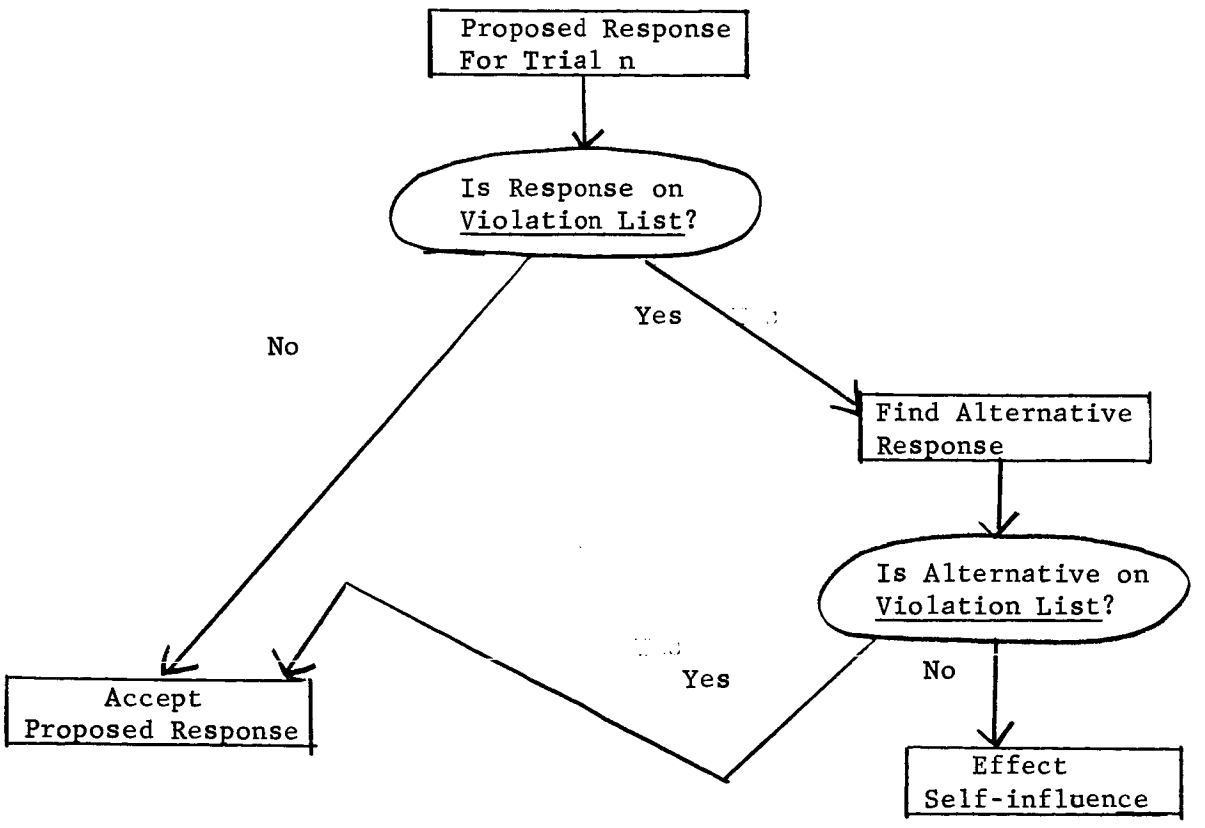

Figure 8

9/ For WW states the alternative responses are IL, IR; for WL states they are IL, DR; for LW states they are DL, JR; and for LL states they are DL, DR.

To effect the Self-influence the new response has to be added to the relevant part of A's decision net. Such alterations in decision nets are made by adding a new node plus the required response to the appropriate place in the net.[10/] To illustrate this procedure consider the decision net of Figure 4. Suppose, for the moment, that this is the net which represents A's decision procedure as of the ninth trial in the situation just described. The response proposed by this net to the market state WL is DR. But A's Monitor notes that DR is a violation and the alternative response IL is proposed. IL does not appear on the Violation List and a change of the net is required. Such a change is illustrated in the two nets shown side by side in Figure 9. Notice that the new node S/L is the first relevant node to appear on the Monitor's attribute list. Notice also that the last group response (shown in Figure 7) was an IL. Hence, the new response is attached to the positive branch of the node S/L, and the old response DR is attached to the negative branch.

It is also worth noting that these procedures only partially circumvent the difficulty which prompted A to change his mind. Although he is represented as wanting to avoid decreasing the right market, it is only an hypothesis of the model that he would rather increase the left than the right. The model's decision leads A, in this situation, to behave as though he prefers to leave the right market alone rather than decrease the bid any further. And, since he has to make a bid of some sort, his attention is caught by the win on the left which is a suitable basis from which to resolve his dilemma in terms of an increase in the bid price. The suitability of

10/ The rules that govern the addition of nodes are described in detail in Section 3.

A's Decision Net Before and After Self-Influence

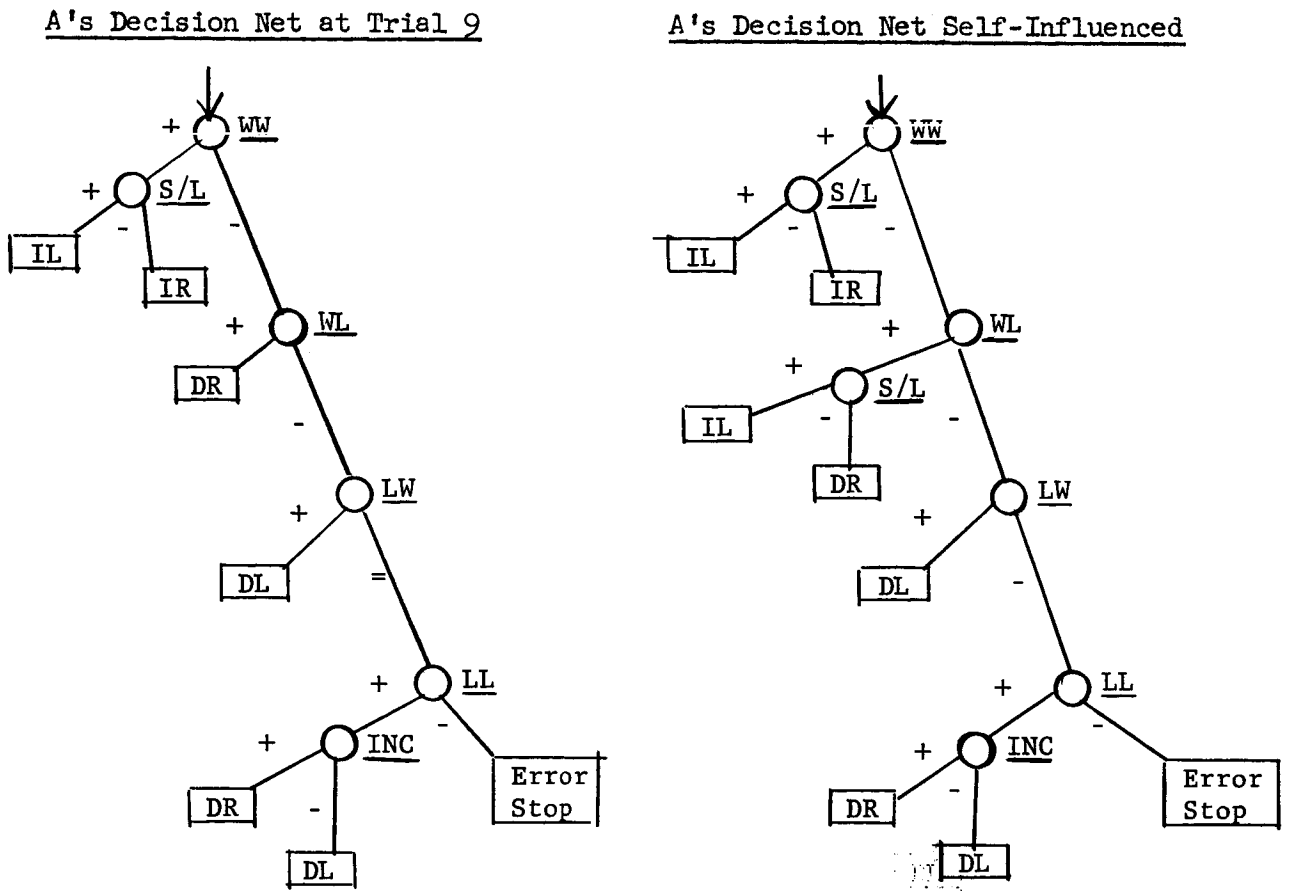

Figure 9

representing both the dilemma and its resolution in this manner is examined in Chapter IV which deals with tests on the model's processes.

(d) Interpersonal Influence and the Dominance Relation

In order to discuss the procedure by which interpersonal influence is hypothesized to occur it is as well to recapitulate briefly the situation faced by each S in Stage 2. On each trial S's are instructed to write down their own decisions before announcing same to their colleague. As was noted above, it is during the process of making their own private decisions that

the hypothesized Self-influence process takes place if required. After S's have written down their bids they tell one another what it is they wish to do. Manifestly, on a particular trial they may both have decided upon the same bids. In this event the model hypothesizes that S's will agree to use these prices for the group's decision. There will be no dispute, and the group's bid will be identical to the private bids written down by both S's.

The more interesting case is when the private decisions of the two S's do not agree. In this circumstance, they can decide to use either one of the proposed bids for some other pair of prices. Whatever the result of the group's deliberations it is inevitable that the proposed bid of at least one S will not be used as the group's bid. If one considers the acceptance or rejection of a proposed bid as that of the group's in terms of rewards or the absence of rewards, then each S can be represented as controlling, in part, the rewards earned by the other. Accordingly, disagreement between S's as to the group decision defines the situation in which interpersonal influence may take place.

It is now necessary to recall the discussion on dominance that was presented in Chapter I. It was noted that research on group decision-making suggests that on the average groups tend to make riskier decisions than those made by the individuals themselves. But it was also pointed out that the risky-conservative nature of group decisions appear to be determined by the social norms prevalent in the decision situation. In addition, it was mentioned that in recent research using an experimental environment similar to that employed here, the relevant norms were conservative in nature -- during disagreements the more conservative decision was usually chosen as the group's.

Riskiness and conservativeness are defined here in terms of responses

to given market situations. An individual who raises the winning bid in a WL or LW situation is making riskier decisions than one who decreases the losing bid. One gross indicator of the risky-conservative nature of a decision net is its level of bid prices, or what amounts to the same thing, the frequency of wins produced in Stage 1. Nets that generate more increases will yield bids with higher prices, which in turn will win less often. Thus, a measure of the conservativeness of a decision net is the frequence of wins it obtains on both markets. Frequency of wins is a useful measure only if the decision behavior is relatively stable. Accordingly, it would appear reasonable to use the latter bids of Stage 1 as the data for the computation of this index.

Since this research is concerned with two person groups, the more conservative decision-making of any pair is readily determinable. For each S the model computes the frequency of wins obtained on the last ten trials of Stage 1 for both markets. This number becomes the value of the Conservativeness Index for that S. Consequently, for any pair of S's the model compares the values of this index.[11/] The S with the greater value is the more conservative. It is he who is hypothesized by the model to be the Dominant member of the group.

The determination of the Dominant S is an important step, as the hypothesized rules which account for interpersonal influence use this characteristic. The interpersonal influence rules are evoked each time S's disagree on what bid to make for the group. Let two such S's be denoted by the names A and B, and let it be understood in the discussion which follows

11/ In the event of a draw the model recomputes the values using the data of one additional trial at a time until the tie is broken.

that A and B disagree on the group bid. The interpersonal influence rules are given by:

(i) If B's proposed response does not appear on A's Violation List, and if B is Dominant, then B's response is chosen as the group's decision, and an entry recording the market state (WW, WL, etc.) on this trial is made on A's Influence List.

If this is the first occurrence of this market state value on A's Influence List no further action is taken. If there already is an identical market state value on A's list, then a new node with B's response attached to it is added to A's net in the appropriate place -- i.e. influence is effected on A. After A's net has been altered the market state values of this trial is removed from A's Influence List.

(ii) If B's proposed response appears on A's Violation List, and if B is Dominant, then A's response is chosen as the group's decision and an entry recording the market state on this trial is made on B's Influence List.

If this is the first occurrence of this market state value on B's Influence List no further action is taken. If there already is an identical market state value on B's list, then a new node with A's response attached to it is added to B's net in the appropriate place -- i.e. influence is effected on B. After B's net has been altered the market state value for this trial is removed from B's Influence List.

(iii) If B's proposed response appears on A's Violation List, and if A's proposed response appears on B's Violation List, and if B is Dominant, then B's response is chosen as the group's and no further action is taken -- i.e. no entries are made on A's Influence List.

To illustrate the behavior of these decision rules consider the following situation: Both S's are considering what bids to make for the tenth trial in the situation presented in Figure 7. Suppose that the decision behavior of A and B are represented by the discrimination nets in Figure 10. The market state at the end of trial nine is WL. And if the information pertinent to this trial is processed by these nets A and B's private responses will be IL and DR respectively. Since they disagree the Monitor commences processing of the Interpersonal Influence rules. If B is the Dominant member of this group (from Figure 10 it is clear that B's net will lead to more conservative bidding behavior) A's Violation List is examined to determine whether A will permit the response DR to stand for the group's decision.

Suppose that DR is acceptable to A. Then the model chooses this response as that of the group's. Since A agreed to go along with B, in this instance, he is represented as making a note of this by remembering the type of market situation. That is to say, the model places the symbol WL on a list attached to A's Monitor called the Influence List. In so doing the model first checks to see whether there already is a WL symbol on this list. If this symbol is not currently on A's Influence List, the model places it there and then goes on to the next trial. However, if a WL symbol is found on this list, then this symbol is removed from the list and interpersonal influence takes place. (Note that this procedure is an implementation of the

S's Decision Nets at beginning of Trial 10 of Figure 7

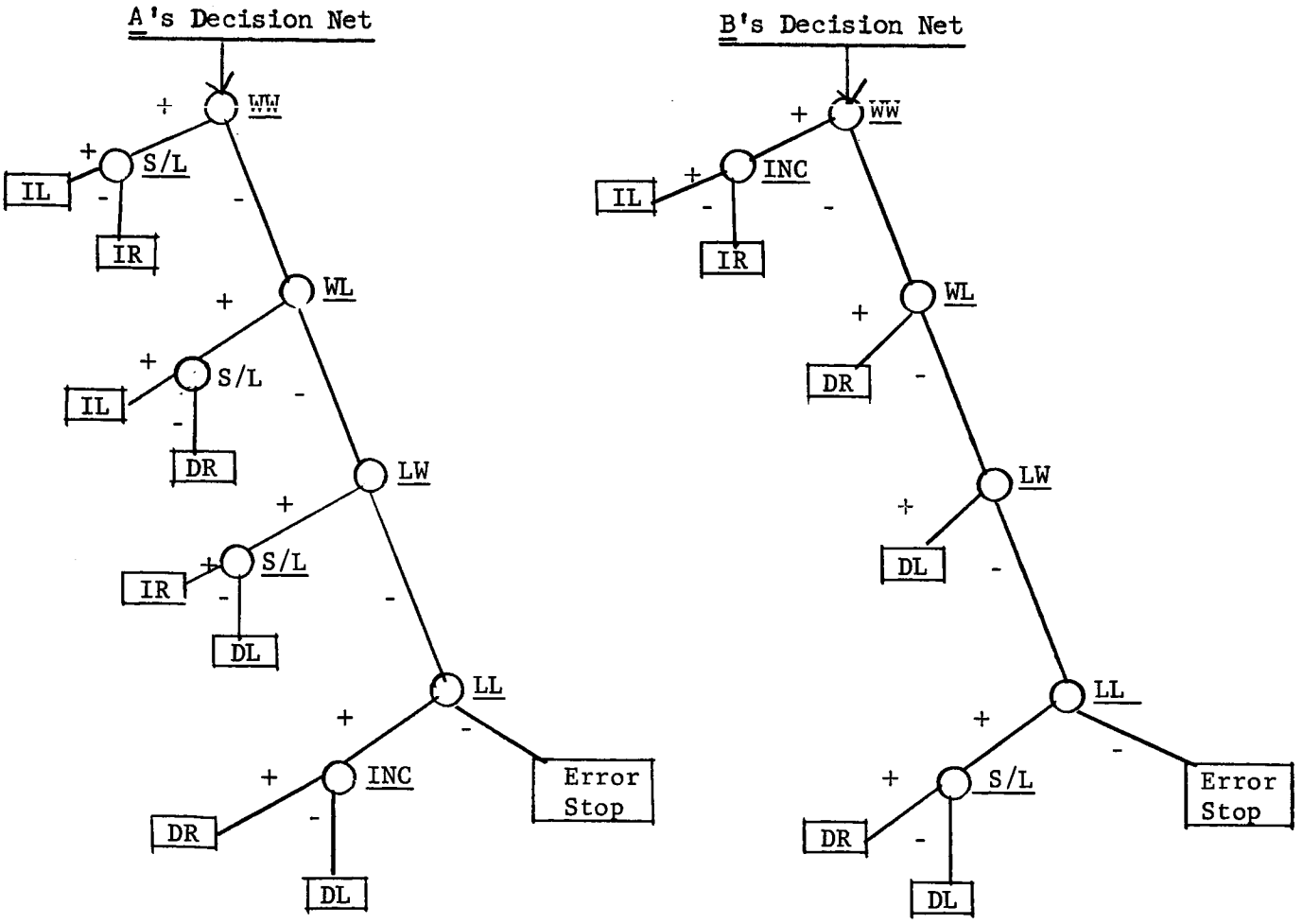

Figure 10

hypothesis: An individual remembers the type of market situation when disagreement occurs and his response does not become the group's. After two such instances occur the individual will alter his behavior with respect to this market situation in an effort to reduce conflict.)

Interpersonal influence is effected by adding a new node to A's decision net under the WL branch. The inappropriate response, IL is placed on the positive branch. What this part of A's net looks like is given in

Figure 11. Throughout this procedure B's net remains unchanged.

A's Decision Net Influenced on WL

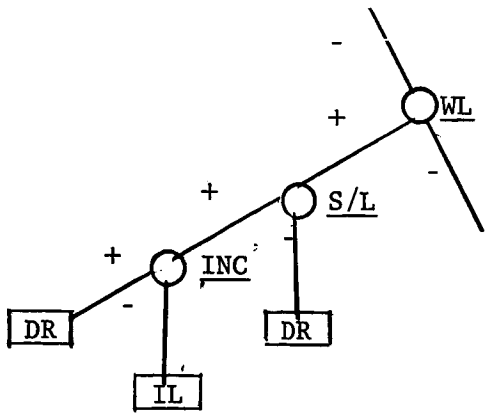

Figure 11

Return, for a moment, to the situation where A and B have just discovered that they want to make different bids on trial ten. Suppose that B's response does appear on A's Violation List. In that case the model examines B's Violation List to see whether A's response can be agreed to by B. If B has IL on his Violation List, the model chooses B's response as the group's, and no changes are made to either A or B's decision nets. However, if B does not have A's response on his Violation List, then A's response is chosen as the group's. In this event, B's Influence List is examined for the entry WL. If such a symbol is already there, B's net is altered as interpersonal influence is presumed to have occurred. If B's List does not have this symbol on it, then it is placed there to record the disagreement and the model proceeds to the next trial.

Interpersonal influence, then, is hypothesized to occur under the

above conditions when there is conflict or disagreement between S's proposed responses. A flow chart of the decision sequence is provided in Figure 12. It should be noted that the model resolves the disagreement, in terms of the group decision, by selecting the group's response from that S whose decision nets and Monitor lists have remained unchanged. One obvious consequence of these procedures is that disagreements tend to make S's decision nets grow to become more like one another. This is a phenomena that is observable in group behavior. Whether the procedures discussed above account for what is observed is examined in Chapter IV.

3. The Structure of the Decision Nets

In the discussion of the Monitor's behavior numerous references were made to the procedures by which new nodes and responses were added to existing decision nets. It was never specified in any detail how these additions were effected. Nor was the origin of these nets accounted for -- i.e., what permits the model to say that a particular decision net represents A's decision behavior?

a) Rules for Altering Decision Nets Used by the Monitor

The Monitor's function, it will be remembered, is to observe the proposed responses of its discrimination net, decide whether the Self-influence and/or Interpersonal Influence processes are to be activated and if so to make the requisite alterations in the net. Each of these influence procedures provides the new response that is to be attached to the new node. Hence, the concern at present is solely with the mechanism by which new nodes get added -- i.e., the mechanisms that control the growth and collapse of the decision nets.

In order to describe the behavior of the addition and collapse rules one further item must be recalled; namely, that the Monitor has a list of

Flow Chart of Group Decision Sequence for B Dominant

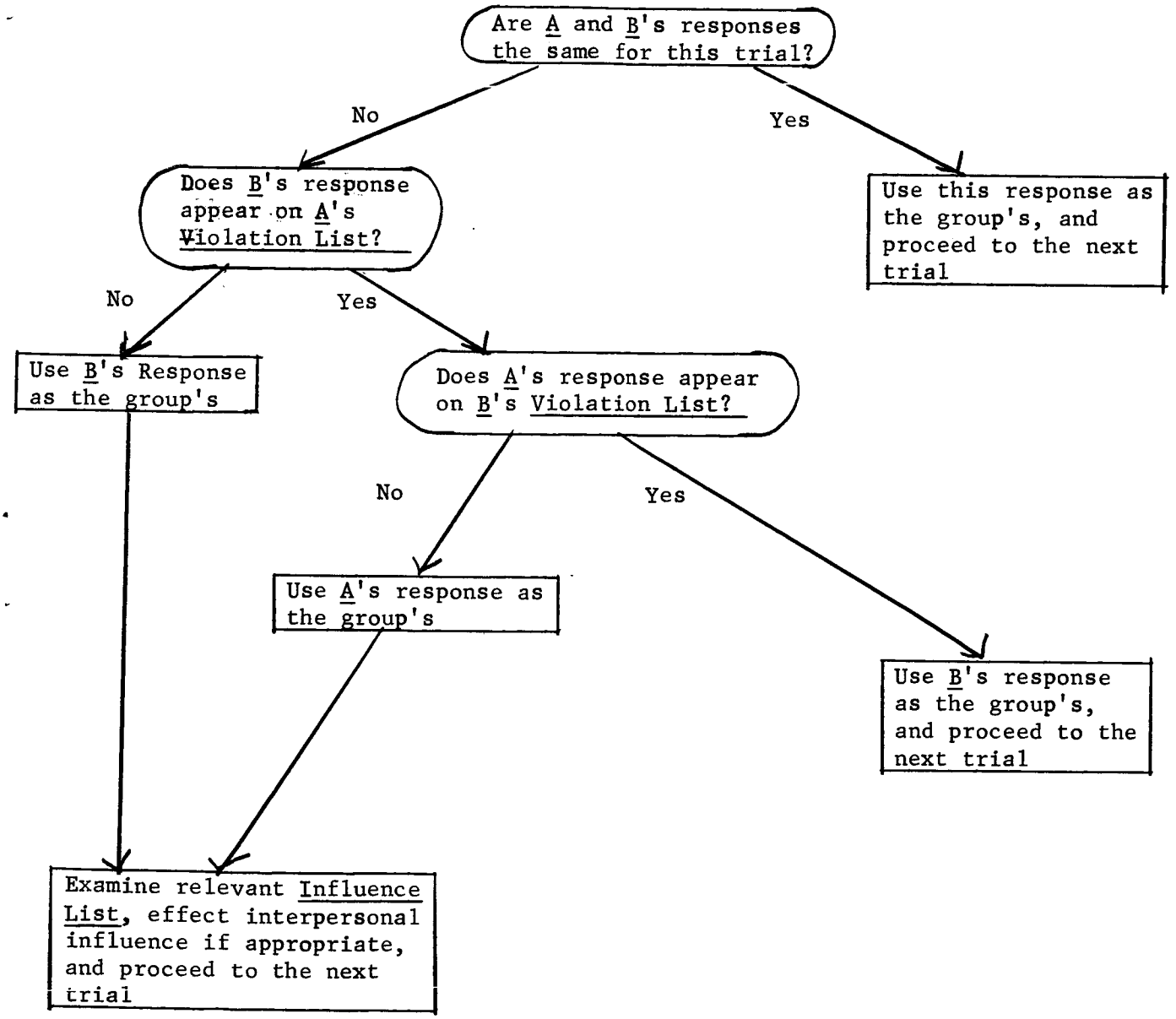

Figure 12

attributes which are provided in an hypothesized noticing order. Suppose that the group is part way through Stage 2 and A's decision behavior can be represented by the net given in Figure 10. Suppose further that during the current trial one of the two influence processes is evoked and an alteration is to be made in A's net. In particular, suppose that the market situation is the same as given in Figure 7, and that we are dealing with one of the influence situations described above.

1) To effect the required change the Monitor examines the list of attributes in order and selects as the new one to be introduced the first on the list that is not already a part of the relevant branch of the net. For example, the relevant part of A's net before the change takes place is:

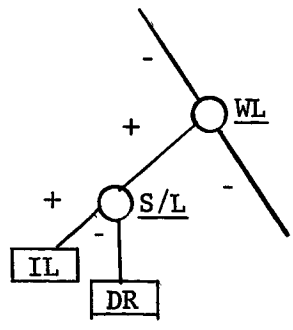

The first node on the Attribute List that has not yet been used on this branch is INC.

2) The new node is then checked against the current market situation to determine its appropriateness. The nodes S/L and INC are always appropriate, since each S is constrained to raise or lower his bid on the left or right market on every trial. However, the nodes R.B.S. and those dealing with consecutive wins and losses may not fit the existing market situation. If the new node is not appropriate it is returned to the Attribute List and the next one in order is tried.

3) Once an appropriate node is selected it is added to the net by replacing the faulty response with the new node. The new response is attached to the relevant branch of the new node -- this branch is defined by the market information at the time -- and the response that led to this change is attached to the other branch.

In the example given above, if the new response is DR and the new node is INC the alteration is given by:

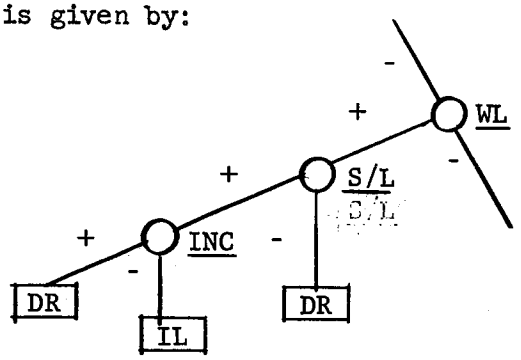

Note that in Figure 7 the group response for the last trial was IL. Hence, the relevant branch for the new response is the positive one. Accordingly, the faulty response is attached to the negative branch and the result is what is shown directly above.

This rule can be called a "Set rule" as it excluded the repeated use of the same member of the attribute set along a given branch of a net. If such a set rule was not employed, there would be no way of preventing the same attribute being introduced over and over again, each time with at least one new response. The nets that would result would exhibit neurotic or plainly ridiculous behavior. (To digress, for a minute, it would be interesting to investigate whether it is a breakdown of such a set rule that would account for the phenomena of fixation and nervous breakdowns which occur in human and animal subjects when learning in a task is made impossibly

difficult.) Since a certain regularity in discrimination nets is required if the individual is to be represented as perceiving regularities in the environment,[12] a rule such as the one described must be included to guide the selection of new nodes.

In the above statement of the rules it is noted that the Attribute List is searched for a node that is appropriate to the current market situation. It is quite possible, however, that this search may be fruitless. That is to say, none of the remaining, unused attributes are appropriate to the situation. Or, alternatively, the branch in the net under consideration may have grown to such an extent that each possible node is already represented. Since an alteration must take place for influence to be effected, the only way it can be accomplished is to reintroduce the first node that appears on the Attribute List. This results in the relevant branch of the net looking something like that shown in Figure 13.

A Branch of a Net Where a Node is Reintroduced

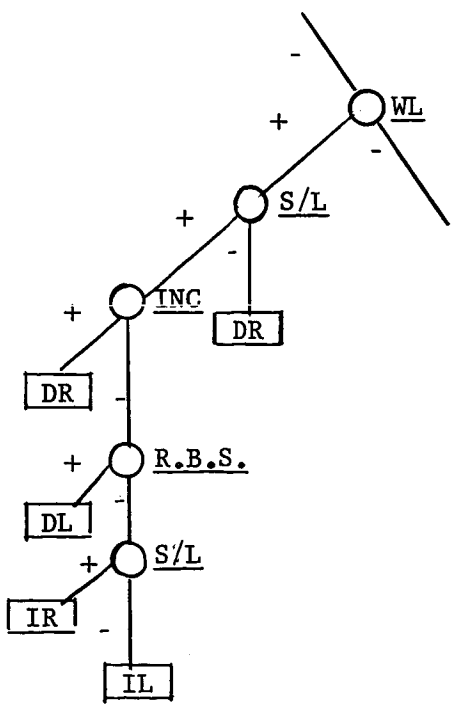

Figure 13

12/ See, for example, J.S. Bruner, "On Perceptual Readiness," op. cit.

The introduction of the second S/L node is a signal to the Monitor to collapse this branch of the net back to the first occurrence of the node. This collapsing procedure represents the rejection of a decision rule or hypothesis when no further attributes can be found to give it empirical support. This collapse rule can be started as follows:

4) On those instances when the Monitor has to reintroduce a node in a branch of the decision net, the branch is collapsed back to the original node in question. The new response which led to the addition causing the collapse is attached to the original node in lieu of the node that was previously there. An example of this collapsing procedure is given in Figure 14.

Example of Collapse Procedure When a Node has been Reintroduced

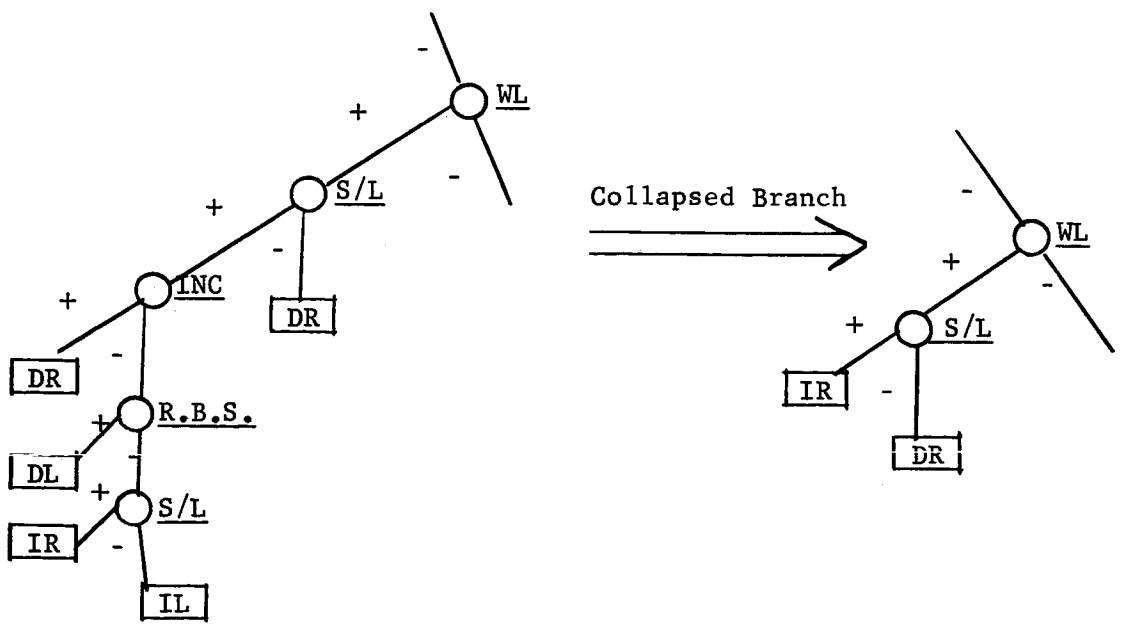

Figure 14

5) An additional difficulty is encountered when through the addition of new nodes and responses a redundant situation is encountered. Such occurs when two nodes representing the same attribute are attached below a third, and when these two nodes have identical responses. In this case, the node at the higher level is logically redundant. The collapse rule used here eliminates this redundancy by replacing the higher level node with either of the two that came after it. The remaining twin is also deleted. An example of this situation is provided in Figure 15.

Example of Collapse Procedure to Eliminate Redundancy

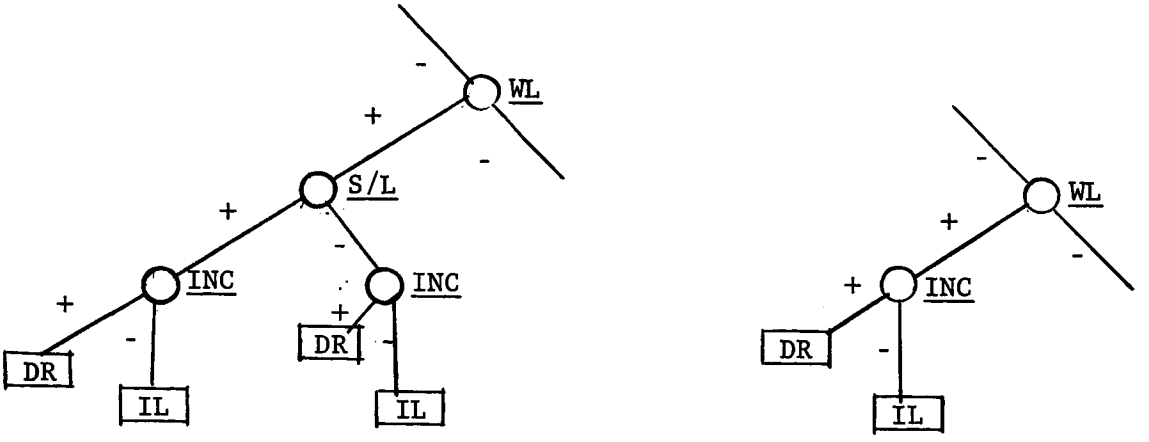

Redundant Branches

Collapsed Branch

Figure 15

These five rules specify the procedures by which the Monitor alters an individual's decision net. It is interesting to note that although the set rules was introduced to permit moderately stable nets to be developed, one consequence of so doing is to introduce a "consonance" effect. At the same time there are obvious similarities between the behavior generated by these rules and that denoted by cognitive "dissonance reduction." In brief, the similarities invite the speculation that it might be possible to demonstrate that these rules, or ones like them, are capable of accounting for much of the behavior presented in research on cognitive dissonance. (e.g. Festinger, 1957, and 1964). Whether such might be the case or not, these rules do appear to implement the main notions underlying hypothesis acceptance-rejection and dissonance reduction behavior.

b) The Origins of S's Discrimination Nets

The principal objective of this research is to demonstrate that group behavior in Stage 2 can be explained by the model from a knowledge of individual behavior in Stage 1. To accomplish this objective an adaptive theory of individual behavior has been proposed which consists for each individual of a Monitor acting upon its discrimination net. If the group decision behavior of a specific pair of S's is to be explained, each Monitor must have under its control a discrimination net that is sufficient to account for a particular S's behavior when he is making decisions by himself. Unless the discrimination nets employed by the model of a specific group can account for the behavior of each S prior to the commencement of Stage 2, the remainder of the model will make scant empirical sense. Thus, it is now necessary to describe the procedures by which the model of a group's decision behavior generates the discrimination nets sufficient to

account for each member's behavior.

The model's task is to develop decision nets that represent the decision behavior of each S. The only data available are those provided by S's during Stage 1. Hence, the model's task can be restated as that of inferring decision nets from the bidding data exhibited on S's data sheets from Stage 1. One way of accomplishing this inference -- the method adopted by the model -- is to give the Monitor the task of learning to mimic the bidding behavior of each S in Stage 1. Since S's are bidding by themselves the Monitor has no need of its Interpersonal and Self-influence mechanisms. Rather, it requires an additional process, the Mimic Procedure, with which it can develop the appropriate decision nets.

The Mimic Procedure used by the model behaves as follows: The model is started at the first trial of the record of an individual's Stage 1 behavior. Its task is to predict the first pair of bids made by the S. But the model has no decision net from which to generate a response. Hence, the Mimic Procedure is activated and it selects the first node of the Monitor's Attribute List that is appropriate to the given market situation. As all S's were presented with a WW on the first trial, the first appropriate attribute is WW. The next step is to attach to this node the correct responses. Since the objective is to behave as S has done, the Mimic Procedure examines S's record and determines what his response was for this trial. Suppose it was IR. Then, this response is attached to the positive branch of the node and the response NO -- which means there is no response -- is attached to the negative branch. Thus, for the first trial the decision net would be given by:

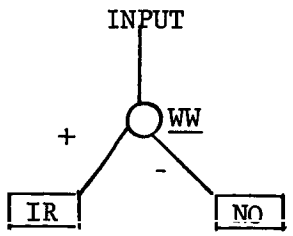

Having completed the first trial the model moves on to the next and attempts once again to predict S's response. Manifestly, unless the outcome of S's first bid is WW, and unless his response is JR, the model will be unable to predict correctly.

Suppose that the outcome on the second trial is WL and that S's response is DR. The model's prediction is, of course, the response NO. As this is not identical to DR, the Mimic Procedure is activated once again. It selects the appropriate attribute and attaches to its positive branch the desired response yielding a decision net:

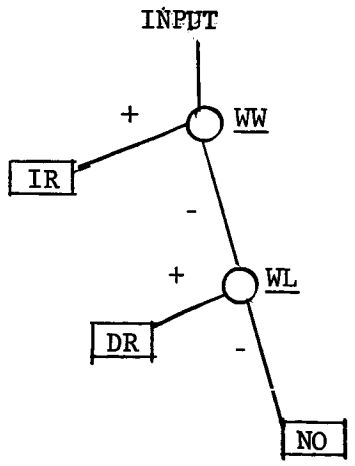

After completing its work, the Mimic Procedure always hands control back to the Monitor which in turn proceeds to the next trial. At the beginning of each new trial the Monitor employs the decision net to predict S's actual response. If the prediction is correct no alterations are made, and the Monitor proceeds immediately to the next trial. However, if the predicted

response is not the same as S's, the Mimic Procedure adds a new node plus S's actual response to the relevant part of the net.

To continue with the example, suppose that the outcome for the third trial is LW and that S's response is DL. Since the net is unable to predict this behavior the following addition is made to the net.

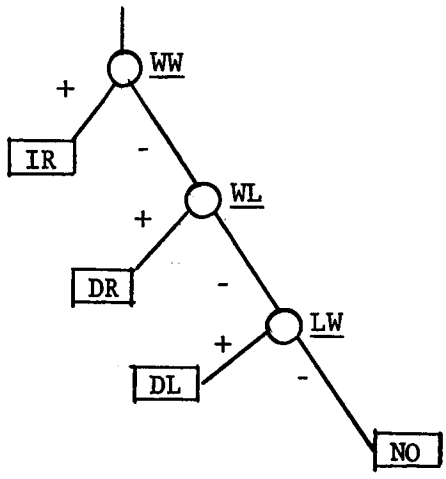

The fourth trial is a WW situation and as S's response is IR the net is able to predict correctly and is left unchanged. Suppose that the fifth trial is also a WW but that this time S responds with IL. Since the net's prediction for this situation is incorrect the Mimic Procedure adds the first appropriate node plus S's actual response is the usual way yielding the following net:

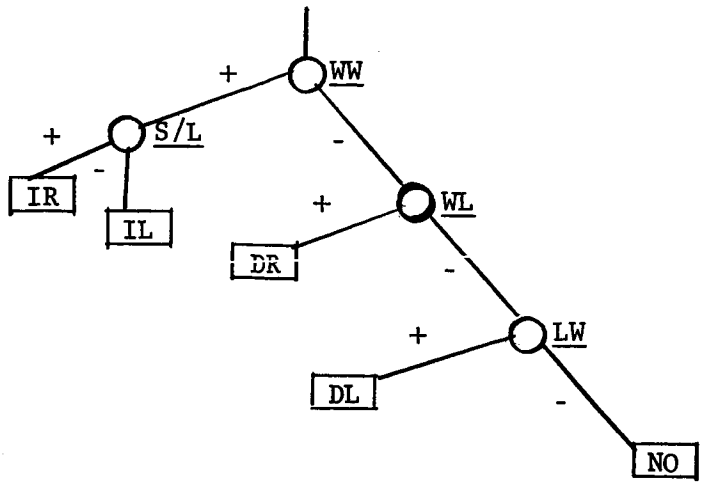

Note that the new response IL is attached to the negative branch of the new node S/L because S's last response was IR. That is to say, the node S/L asks the question: was the last bid on the left market? Since the answer is negative that is the branch on which to place the new response.

As the Monitor proceeds through the entire 35 trials instances may occur which activate the two collapsing rules. In this event the collapsing rules are used as noted above. Once a collapse rule has been used, the decision net will behave as though it had "forgotten" some of its early response patterns. In other words, if the early trials were reprocessed though the net, it would now make a number of incorrect responses instead of the correct ones placed there by the Mimic Procedure. Such forgetting could be eliminated by a number of mechanisms, but the issue at hand is whether S's appear to forget their earlier response patterns as well. A test of this proposition was made (Eglington, 1965), and it was discovered that if one forces the decision net to "remember" all response patterns it becomes unwieldy as well as a poor predictor of S's decision behavior. Accordingly, the collapse rules are permitted to operate and it is merely worth noting that the decision nets generated by the end of the thirty-fifth trial have, as a rule, forgotten a number of earlier response patterns.

By the end of Stage 1 the model has generated a decision net which represents the decision behavior of the S in question. An example of such a net, the one developed from the data of subject J.H., is given in Figure 16. (Note, on the WL branch that the S/L and INC nodes are not in their expected order. For this to have occurred a collapse such as is represented in Figure 15 must have taken place.) Thus, before the model begins the task of explaining the decision behavior of a group it constructs a decision net for each S in this manner. A flow chart of this net building procedure is provided in Figure 17.

One further point about these nets deserves mention. During Stage 1 some S's appear to learn what it is they wish to do more rapidly than other S's. In other words, some S's seem to acquire satisfactory bidding decision rules sooner than others. The Mimic Procedure is able to detect such differences among S's by the simple process of keeping track of the number of additions that have to be made to keep the growing decision net predicting correctly. The greater the stability, once acquired, of an S's decision rules the fewer the number of nodes the net requires to account for the observed behavior. Accordingly, one would expect to be able to test for an S's decree of satisfaction with his decision rules by counting the number of incorrect predictions made by the net over the last fifteen trials of Stage 1, if the Mimic Procedure is stopped at the end of the twentieth trial. Similarly. one might expect to generate more stable nets if one ignored the first few trials and began the net growing procedure at the end of the tenth trial, for example. The object, of course, is to generate decision nets that can account for an individual's decision behavior in Stage 2. How well these nets perform this task is examined in Chapters III and IV.

J. H.'s Discrimination Net at the end of Stage 1

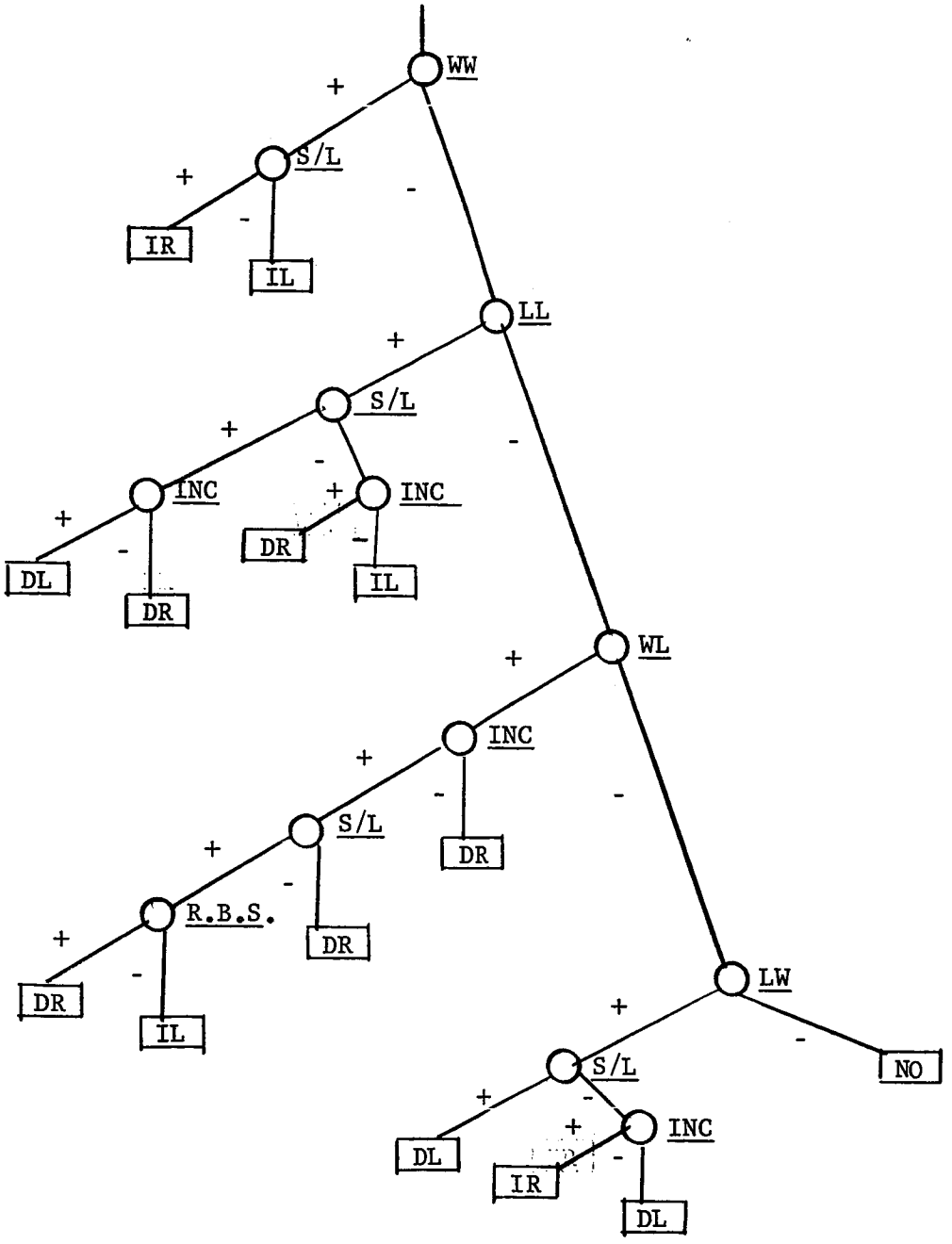

Figure 16

The Mimic Procedure (Used During Stage 1)

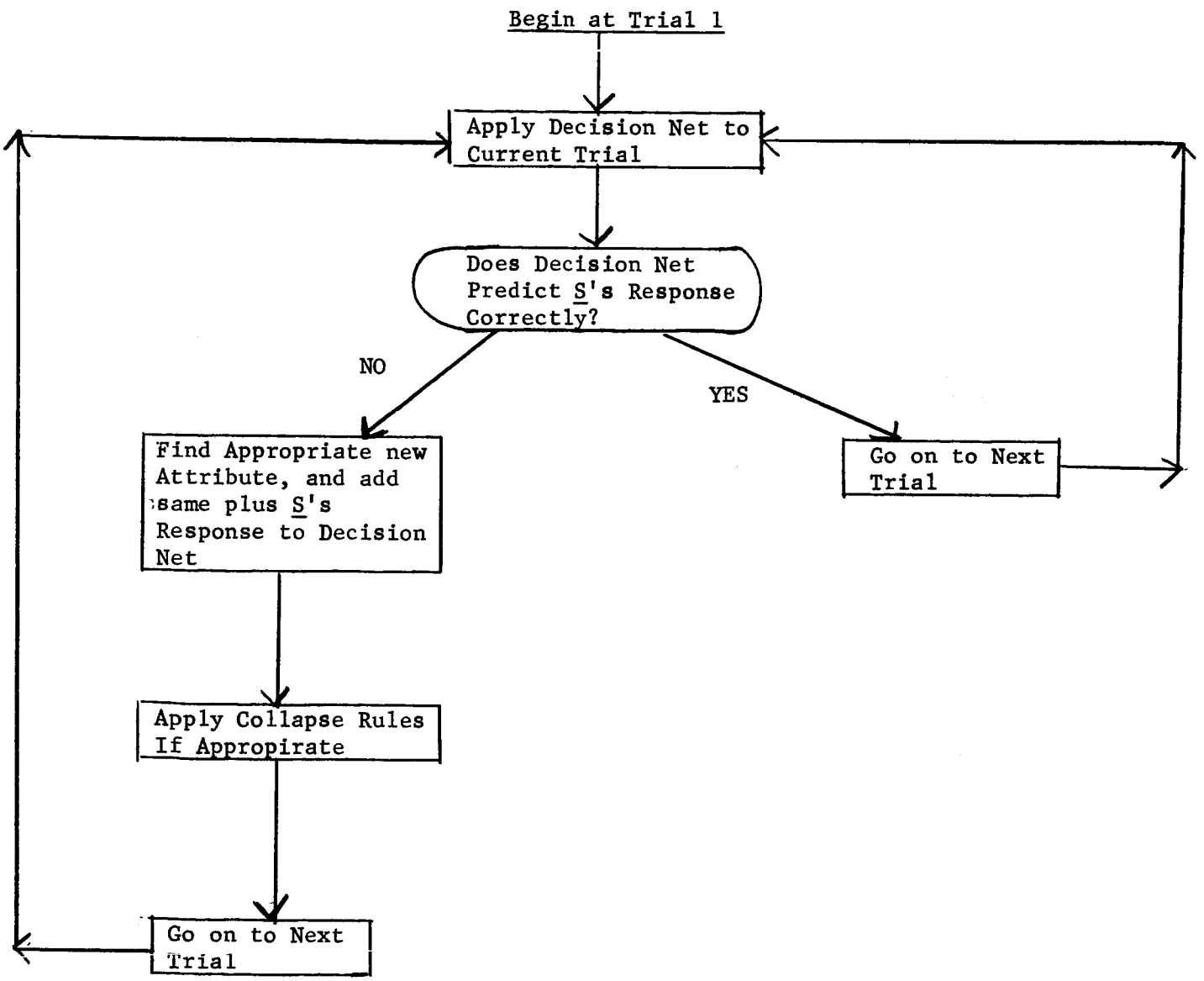

Figure 17

4. Memory and the Search and Selection Procedures

At this point in the discussion of the model the hypotheses concerning the contents of memory should be quite apparent. For, if the model is to behave as specified, then these processes require that certain information be made available to them.

The main assumption is that the memory contains the record of bidding behavior as exhibited on an S's data form as the series of trials unfolds. In Stage 1 these data constitute the bids and outcomes of each S. During Stage 2 it is the behavior of the entire group. These items are placed on lists associated with each S's Monitor.

Manifestly, the Monitor's Attribute List is also a part of the memory. But note that each attribute specifies the quantity of information it requires. That is to say, all but the attributes dealing with consecutive wins and losses only require information from the immediately preceding trial. The Consecutive win and loss attributes can require information from the last five trials. And the Trend value computation uses the seven previous trials. Hence, it is being hypothesized by the model, that most responses are made as a consequence of the immediate stimulus-situation. The exceptions are due to the slightly increased horizon required for the noticing of runs of wins or losses and the continued rise or fall of the bid prices in a particular market. Consequently, although the entire record of bidding behavior is eventually at the model's disposal, it restricts its attention almost exclusively to the immediate stimulus-situation.

The Search and Selection procedures are specified in an analogous manner. For the Monitor has to be able to determine the appropriateness of each new node that is added to a net. To perform this operation a small set

of search and test procedures are required. Moreover, each time a decision net is used to generate a response the nodes in the net have to determine whether they branch positively or negatively given the market state at that trial. Hence, the model contains a set of procedures that permit it to carry out the requisite comparisons and tests.

The only point of note about these procedures is that they are themselves developed from the basic information processes that it is hypothesized each individual has at his command. The theory of individual decision behavior (Newell, Shaw & Simon, 1958) from which this model has evolved posits the existence of such a set of primitive information processes. These processes are given an empirical interpretation in the formal computer language in which the model is stated -- Information Processing Language V (Newell, et al, 1964.) Though the search and selection procedures are not themselves intended to represent the ways in which S's search for and select the information they require, their structure and behavior is a direct consequence of the basic processes with which the theory of individual decision behavior is endowed.

Chapter III

Testing the Group Decision Model: Part I

Once a model has been constructed the next step is to subject it to a series of empirical tests. Unless one can determine how "well" the model behaves under a variety of circumstances one is unable to comment upon either its empirical validity or the explanatory power of its hypotheses. Thus, before the model of group decision-making can claim to represent group behavior it must be demonstrated that it is capable of surviving the process of disconfirmation by empirical test.

To test a model of the sort described in Chapter II is not as straightforward as it might appear. On the one hand there are the data of the subject groups. And on the other there are the data generated by the model for each of these groups. It is the comparison of these two streams of behavior that poses the difficulty. For, it is not at all clear how best to measure such "differences" as exist. Nor are satisfactory measures of "goodness-of-fit" readily available. In short, a set of tests are required that will discriminate between both processes and decisions. And the purpose of the first part of this chapter is to discuss these difficulties and describe the tests that are to be used on the group decision model.

1. The Selection of Alternative Models

The standard procedure to employ when subjecting a model to test is to compare its output with that generated by some alternative or competing model. If the two sets of outputs do not differ significantly, then claims of superiority for the proposed model can be rejected. The chief problem in carrying out such tests lies in selecting an appropriate

alternative model. Unless the alternative produces outputs which are of a similar type to those generated by the proposed model, comparisons between same are not particularly meaningful. The task of selecting an alternative becomes more than usually difficult when one is concerned with information processing models of human decision behavior. The difficulty does not depend upon their structure, or the fact that they are stated as computer programs. Rather it is a function of the range of detail that these models produce about the decision processes themselves. Since information processing models are unique with respect to this level of detail, comparable alternatives whether drawn from standard or statistical decision theory are nowhere to be found.

Consider, for example, the data provided by the group decision model. On each trial of the group stage the model produces three decisions, one for each S and one for the group. Concurrently, the Self or Interpersonal Influence mechanisms may have been activated, and either or both S's decision nets may have been altered. Hence, to be completely comparable an alternative model would also have to specify when and under what conditions interpersonal influence takes place, as well as the characteristics of the stimulus-situation that evoke each S's responses.

One alternative is to hypothesize that human decision behavior can be represented by a random response generator. Such a model is capable of producing the requisite individual and group decisions. Furthermore, if each S is represented by an independent random device, the behavior of one will not be influenced by the behavior of the other. In effect, the model would exclude from consideration all hypotheses concerning interpersonal influence other than that represented by random behavior.

To generate comparable outputs the model must be completely specified.

One way of doing so is to represent each S as choosing his trial by trial responses at random. The group's response would then be chosen by a random draw from S's responses. On each trial there are four possible responses. Thus, this model will, on the average, predict individual and group responses correctly one-quarter of the time. If one were concerned solely with predicting which market will be attended to or whether the response will be an increase or a decrease, one would expect half of the model's outputs to be correct.

As such this is neither a very exciting nor a particularly meaningful alternative. For it makes no assertions about the behavior under investigation other than the claim of complete ignorance. Despite its manifold failings it can serve one purpose. That is to provide a lower limit or bench-mark on the acceptability of the group decision model's behavior. If the group model is unable to predict responses better than one-quarter of the time, a critic would be justified in saying that he could do as well or perhaps better by tossing a coin.

To make such an assertion, even if true of a particular model, does not add much to our knowledge of decision behavior. If human decision-makers can be adequately represented by random devices, then there is little more to be said. Certainly there is no further need to study their decision behavior. All that is required is to select the appropriate random generator and test its goodness-of-fit. If one holds any other view, one is interested in discovering alternative models that contain explicit statements as to the form and structure of the decision processes under investigation. Clearly, the researcher interested in probabilistic models can construct alternatives that are in many respects more sophicticated than the random model described above. But their properties,

despite the refinements, are quite similar. As a source of fruitful hypotheses about human behavior they are to many, myself included, theoretically barren.

The solution that is proposed to this problem of alternative test models proceeds as follows: The group decision model contains a number of hypotheses about interpersonal and individual learning behavior. These hypotheses are represented by specific decision processes which operate in a manner described earlier. One of the objectives in submitting the model to test is to determine whether these processes contribute significantly to the explanation of observed behavior. One way of performing such tests is to construct alternative models in which at least one of these hypothesized mechanisms is deleted. In a similar fashion alternatives can be constructed to determine the sensitivity of the Monitor's parameter values by altering the procedures by which they are computed.

For instance, the group decision model assigns the role of Dominance to the more conservative S, where conservativeness is measured by the frequency of wins obtained during the last ten trials of Stage 1. An alternative model can be constructed by reversing this assignment such that the less conservative S is now Dominant. The behavior of these two models can be compared and significant differences can be computed. This test can be carried out for each of the fifteen test groups. And for this sample of observations it can be determined whether the assignment of Dominance to the more conservative member leads to significantly better predictions. Manifestly, it is also possible to use this approach to examine the effects of using the last fifteen trials of Stage 1, instead of the last ten, as the basis for selecting the Dominant S. In brief, it is possible to create alternative models to test the sensitivity of each parameter as well as the

explanatory value of each decision process.

A. The Test Procedures

Before describing the tests themselves a discussion of the procedures used is in order. The model of group behavior, it will be recalled, is stated in terms of a computer program. This program takes as its input the data produced by S's during the individual decision phase (Stage 1) of the experiment. The program infers decision nets from these data that represent the bidding behavior of each S. It then sets up the parameter values of the Monitor. Once these tasks are completed it permits each decision net to make its response for the first trial and selects one of them as the group's. The actual group's outcome is used for the simulated group so that the simulated group will have an indentical stimulus-situation on each trial. The program then proceeds to the next trial, generates its decision, makes whatever changes are called for in the individual nets, and so on until the thirty trials have been completed.

In order to determine the effects of a change in parameter setting or decision process all that has to be done is to alter the program in the appropriate way. Thus, an alternative is constructed by deleting a certain process from the program or by changing the procedure by which a parameter value is computed. Once an alternative is created it is run on the computer against each of the fifteen test groups in the usual manner. Though there is nothing special about the running of such altered programs, a few facts about the computing time consumed by such procedures may be of interest.

The group decision model is written in Information Processing Language V. In its complete form it contains a slightly more than 5,000

IPLV statements. The program was run on a Control Data Corp., G21 computer. A normal run required the execution of roughly 400,000 cycles, which on this computer took approximately 14 minutes. The total computing time consumed, including all debugging and the running of all alternative models, was roughly 100 hours.

Each time a simulation of a particular group is run it produces 87 test observations -- one response for each S and one for the group for each of 29 trials. These observations can be compared with the corresponding real responses and the errors noted. In this study three types of errors are used. A response can be in error in its choice of Direction (Increase or Decrease), in its choice of Side (Left or Right market), and either or both. Accordingly, simulated responses are compared to their counterparts and the nature of the error is noted. For any group the errors are summed by type to give a set of measures on the performance of the model.

Consider, for example, the data provided in Table 1 on the simulated and real behavior of the group composed of the individuals E.R. and R.F. Note that Direction, Side and Total errors are computed for each S as well as for the group. Furthermore, these totals can be turned into proportions correct by dividing the number correct by the total number of trials. For these data the proportions are shown at the bottom of the table. Note also that the right-most column contains a list of the market situations prevailing at each trial. Thus, when errors occur one can examine whether it is a particular part of an S's decision net that is at fault.

An additional type of analysis can be performed by determining the number of times S's disagreements on bids as well as their group decisions are correctly predicted. One example of same is given on trial 8 in Table 1. Here E.R. responded with an Increase on the Left while R.F. wanted to Increase

Example of Simulated and Real Behavior of Group E.R. and R.F.

D -- Direction
S -- Side

Trial	E.R.	SIM. E.R.	Error D	Error S	R.F.	SIM. R.F.	Error D	Error S	Group	SIM. Group	Error D	Error S	Mkt. Sit.
1	DR	DR			DR	DR			DR	DR			WL
2	DL	DL			DL	DL			DL	DL			LW
3	DL	DL			DL	DL			DL	DL			LW
4	IL	DL	x		IL	IR		x	IL	IR		x	WW
5	IR	IR			IR	IR			IR	IR			WW
6	DL	IR	x	x	DL	DL			DL	DL			LW
7	IR	IR			IR	IR			IR	IR			WW
8	IL	IL			IR	IR			IR	IR			WW
9	DR	DR			DR	DR			DR	DR			WL
10	DR	DR			DR	DR			DR	DR			LL
11	IL	IL			IL	IL			IL	IL			WW
12	DR	DR			DR	DR			DR	DR			WL
13	IL	DR	x	x	DR	DR			DR	DR			WL
14	DL	DL			DL	DL			DL	DL			LW
15	DR	DR			DR	DR			DR	DR			WL
16	IR	IL		x	IL	IL			IR	IL		x	WW
17	IR	DL	x	x	DL	DL			IR	DL	x	x	LW
18	DL	DL			DL	DL			DL	DL			LW
19	IR	IR			IR	IR			IR	IR			WW
20	DR	DR			DR	DR			DR	DR			WL
21	DL	DL			DL	DL			DL	DL			LW
22	IL	IR		x	IR	IR			IR	IR			WW
23	IL	DR	x	x	DR	DR			DR	DR			WL
24	DL	DL			IL	DL	x		DL	DL			LW
25	DR	DR			DR	DR			DR	DR			WL
26	IL	IL			DR	IL	x	x	IL	IL			WW
27	IL	IL			IR	IR			IR	IL		x	WW
28	DR	DR			DR	DR			DR	DR			WL
29	IL	IL			IL	IL			IL	IL			WW

Proportions Correct

	E.R.	R.F.	Group
Direction	.83	.93	.97
Side	.79	.93	.86
Total	.76	.90	.86

Table 1

the bid on the Right. They decided to follow R.F. and Increase the Right market bid. The model correctly simulates both the disagreement and its outcome. Trial 27 provides an example of a situation where the model correctly predicts the disagreement but makes an error in selecting the group's bid. Trial 23, on the other hand, illustrates a case where the model errs in simulating E.R.'s bid but is correct in the remainder of its choices. Since the model is never put "back on track" -- when it errs it is not corrected -- such analyses provide detailed tests of the model's empirical validity.

2. Tests on the Model's Parameters

The first items to check, before carrying out an analysis of the model's decision processes, are the parameter values themselves. Since parameter values of interest are determined by certain computations performed by the model, tests on their values are in effect tests on the methods by which they are derived.

a) The model employs in S's Monitor, it will be recalled, an estimate of the long-run frequency of wins that would be generated by his decision net. A frequency of wins is computed for each market from the last ten trials of Stage 1. These values are S's Monitor Frequencies. It is somewhat difficult, however, to justify why only the last ten trials should be used. Accordingly, it is reasonable to inquire: why not use the last fifteen or twenty trials? Numbers much larger than fifteen can be ruled out as S's do not generally exhibit stable behavior until around the twentieth trial. But all numbers less than or equal to fifteen appear equally defensible choices. The only note of caution is the likelihood that a few events will distort the average value. Hence, to test the model's sensitivity to changes in the values of the Monitor Frequencies two trial numbers, 10 and 15,

are used. That is to say, Model 1 will use the last ten trials of Stage 1 data to compute its Monitor Frequencies, while Model 2 will use the last fifteen of these trials.

b) When one observes the behavior of S's during Stage 1 it is apparent that a number of the early trials are devoted to becoming familiar with the task. Though later behavior is undoubtedly a consequent of earlier endeavors, S's behavior toward the end of the first 35 trials is more stable than at the beginning. This observation raises the question: why should the Mimic Procedure be given the job of growing a decision net to reproduce all thirty-five trials? For, if the first few are concerned with familiarization, then if these trials are ignored, perhaps a more accurate representation of S's behavior will ensue. One possibility is to ignore the first ten trials and commence the Mimic Procedure on the eleventh. Once again there is little reason to suppose that the eleventh trial is a better starting place than the ninth or the twelfth. The objective is to test the model's sensitivity to the choice of starting place. Since a number much greater than ten would not leave sufficient data with which to grow a complete decision net, it is this number that is used.

To start the Mimic Procedure at the eleventh trial defines a new alternative, Model 3. Model 3, in turn, could be classified into two types: (i) where Monitor Frequencies are computed from the last ten trials, and (ii) where the last fifteen trials of Stage 1 are used. The latter alternative, however, is not considered to be worth subjecting to test. As there are only twenty-five trials of data available it seems unreasonable to use fifteen of them as the basis for estimating the long-run frequency of wins. Consequently, Model 3 is tested in one form only -- i.e. where its Monitor Frequencies are derived in a manner identical to Model 1.

c) The last parameter of note is the assignment of the characteristics of Dominance. The model's hypotheses lead it to select the S with the larger Monitor Frequencies as the Dominant member of the group. Not only may these hypotheses be incorrect, but it may also be true that the model's behavior is not sensitive to a reversal of the Dominance role. To answer these questions two tests are required. The first must determine whether the Dominant member is the one with the higher frequencies, while the second is conducted by reversing the Dominance role and examining the effects of this change on the model's behavior. To perform the latter test three more alternative models are needed -- Model 1', Model 2', and Model 3', where the "prime" mark refers to the reversal of the Dominance role.

These three parameters are not the only ones with which the model of group decision behavior is endowed. There is the measure of a significant difference between Monitor and Actual Frequencies (one-fifth); there is the concept of a Trend which hypothesizes a noticing horizon of seven trials; and there is the concept of a consecutive sequence of wins or losses which requires three or more of such items to exist before noticing occurs. The first and the second are a part of the Monitor's procedures for determining which responses, if any, are to be labelled Violations on a given trial. They affect the behavior of the Self and Interpersonal influence processes. The behavior of these processes is to be tested separately. Hence, there is little to be gained at this point by experimenting with their inner workings. For, if either or both processes can be dispensed with without affecting the model's predictive power, then there is little to be gained by bothering about the origins of their parameter values.

The concept of what constitutes a series of wins or losses can indeed be altered. And some of the effects of doing so can be determined by an analysis of the model. For instance, change the concept so that it now requires five or more wins or losses in a row for this attribute to be appropriate. What this will mean in practice is that these attributes will seldom be used in the net growing operation. By increasing the horizon to five, the frequency of such cases will go down, and one will have reduced the number of attributes available for inclusion in the decision nets. As a consequence, decision nets will be collapsed more frequently. In the group phase this will increase the effects of Self and Interpersonal influence upon the respective decision nets, by the collapses these processes initiate. Changing the number of wins that constitute a run will affect behavior. But as this parameter value was chosen with some care from earlier investigations, it was decided not to experiment with it further here.

The tests on parameter values are based, therefore, on six alternative models. Their constituents are displayed in Table 2 for easy reference. However, before these models are tested against one another, it is first necessary to determine whether the Dominant member of the group is the one with the greater Monitor Frequencies.

Alternative Models for Parameter Tests

	Monitor Frequency 10 Trials	15	Mimic Procedure 35 Trials	25	Dominance Assign. Correct	Reverse
Model 1	✓		✓		✓	
Model 2		✓	✓		✓	
Model 3	✓			✓	✓	
Model 1'	✓		✓			✓
Model 2'		✓	✓			✓
Model 3'	✓			✓		✓

Table 2

A. Test on Monitor Frequencies as a Guide to Dominance

a) To test for the importance of the Monitor Frequencies it must first be determined within each group whether one S has higher win frequencies independent of the number of trials used. The relevant data for the fifteen groups are presented in Table 3. For each S the frequencies are given in pairs, one for the left and one for the right market. The Table is constructed so that S's with higher frequencies are placed on the right. The dotted line dividing the sample into two sets identifies those groups which are composed of graduate students (above) from those which are made up of undergraduates (below the line).

To compare frequencies within groups one can either sum the frequencies for both markets or compare the numbers for the respective columns directly. Using the sum of the two frequencies as the measure it can be seen that in all cases S's on the right side have Monitor Frequencies greater than or equal to those of their colleagues on the left. Hence, the use of the last ten or fifteen trials of Stage 1 does not affect the ranking of group members

by Monitor Frequency. If the higher frequency identifies the Dominant member, the same S will be chosen whether Model 1 or Model 2 is used.

It is interesting to note in Table 3 that in all cases the frequencies in the 10 Trials column are greater than or equal to those of the 15 Trials columns. This regularity is in a part a product of the series of random numbers employed by the experimenter to generate market outcomes. However, when combined with the evidence noted above, these data give some indication of the stability of S's decision behavior. For there is nothing in the task itself which prevents S's from changing their bidding behavior during these trials. But these data suggest that there are regularities in each S's behavior, and that certain relative measures between group members remain the same over the last ten or fifteen trials of Stage 1.

b) The next question to examine is whether the S with the higher Monitor Frequencies is the more Dominant member of the group. The term Dominance is defined by the Monitor's processes. It reflects the tendency of that S to have his response chosen as the group's when disagreements occur. To test this hypothesis a record was made of all disagreements on bids by group. These data are presented in Table 4. The groups as well as their members are listed in the same order as in Table 3. The column L.F. (Lower Frequency) contains the number of times the left-hand member of the group had the disagreement resolved in his favor, while the column H.F. (Higher Frequency) reflects the number of times disagreements were resolved in favor of the right-hand member.

An examination of these data reveal that except for groups GB & Ah, RA & CC, AJ & BC, and LH & TMcC, the S with the higher Monitor Frequencies had as many or more disagreements resolved in his favor than did his colleague. If one treats the graduate subjects separately (those groups

Monitor Frequencies on Left and Right Markets

Group Members	Subject	Monitor Frequencies 10 Trials		15		Subject	Monitor Frequencies 10 Trials		15	
JS & JB	JS	.9,	.6	.7,	.6	JB	.9,	.8	.7,	.7
ER & RF	ER	.8,	.8	.7,	.7	RF	1.0,	.7	.9,	.7
JH & RB	JH	.8,	.8	.6,	.7	RB	1.0,	.7	.9,	.7
TR & DA	TR	.6,	.3	.5,	.2	DA	.7,	.5	.6,	.5
DP & JP	DP	.9,	.8	.8,	.8	JP	1.0,	.8	.8,	.8
CR & DS	CR	.8,	.5	.7,	.6	DS	.9,	.8	.8,	.8
GB & AH	GB	.8,	.7	.7,	.7	AH	1.0,	.8	.8,	.8
DB & MG	DB	.9,	.6	.7,	.6	MG	1.0,	.9	.9,	.9
FH & FV	FH	1.0,	.8	.8,	.7	FV	1.0,	.8	.9,	.7
OM & JK	OM	.9,	.6	.7,	.6	JK	1.0,	.7	.8,	.7
JF & LB	JF	.8,	.5	.7,	.5	LB	1.0,	.5	.8,	.5
LZ & EJ	LZ	.9,	.8	.7,	.7	EJ	1.0,	.8	.9,	.7
RA & CC	RA	.6,	.5	.5,	.5	CC	.8,	.7	.7,	.7
AF & BC	AJ	1.0,	.7	.7,	.6	BC	.9,	.8	.8,	.8
LH & TMcC	LH	.9,	.2	.7,	.2	TMcC	.9,	.8	.8,	.7

Table 3

above the line) there is only one exception (GB & AH) to the rule that the S with the higher frequencies is the more dominent. Within the undergraduate sample this rule does not hold. In half the groups the dominant member is the one with the lower Monitor Frequencies. The sample sizes are too small to draw any major conclusions. But it is interesting to note that one would expect a "conservative social norm" to be present in groups of graduate students of industrial administration. The data suggest that such is the case. Undergraduate engineers, however, might be given to a variety of persuasions, and one would not expect their group behavior to be governed by a conservative norm. Though the evidence supports this line of reasoning many more subjects would have to be studied before significant results could be obtained.

Record of Disagreements on Bids and Their Resolution

Group	Total Disagreements	Resolution in Favor of L.F.	H.F.
JS & JB	8	2	6
ER & RF	9	4	5
JH & RB	7	3	4
TR & DA	6	3	3
DP & JP	6	3	3
CR & DS	11	4	7
GB & AH	7	4	3
DB & MG	8	2	6
FH & FV	13	6	7
OM & JK	10	5	5
JF & LB	8	3	5
LZ & EJ	10	1	9
RA & CC	12	7	5
AJ & BC	13	7	6
LH & TMcC	19	10	9

Table 4

The data of Table 4, however, confute the hypothesis that the S with the greater frequencies is always the Dominant member. If S's were taken solely from populations of graduate business students, the hypothesis might be sufficiently close to being correct that one could ignore the exceptions. In this study such a course of action is not possible. To initialize the model two procedures can be used. The first is to accept the hypothesis and assign the Dominance role to the S with the higher frequencies. This approach permits the model to be tested under the assumption that evidence contrary to the hypothesis on conservativeness and dominance should be ignored.

The second procedure is to initialize the model according to the data of Table 4. This implies that in four of the fifteen cases Dominance is assigned to the less conservative member. To use observations from Stage 2 in this manner is admittedly poor practice, as it consumes degrees of freedom in the test data. However, the objective is to test the sensitivity of the model's parameters and processes. Since the test effects are more pronounced if Dominance is assigned correctly, (it should be noted that the results presented in the remainder of this Chapter and that of Chapter IV are similar in direction though smaller in value if the first procedure is used.) it is this method that is employed in all tests. In so doing it is acknowledged that further investigations must be undertaken to account for the emergence of the leader-follower relations in two-person groups.

B. Test on Sensitivity to Monitor Frequency: Model 1 vs. Model 2

To compute significant differences between the behavior of two alternatives, in this case Model 1 and Model 2, a test is required that can accommodate the inter-relatedness of these models' outputs. The parameter tests are to be conducted on a one-change-at-a-time basis. But the effects of a given change may well range throughout the entire model. Hence, it is not sufficient merely to compare the group decisions of both models. One must also include the decisions made for each S. In addition a measure is needed upon which the tests are to be based.

The metric adopted for the analysis of alternative models is the number of correct responses predicted by the model. For all groups there is a record of each S's and the group's decisions for all trials. All models make predictions as to what these decisions will be. Errors are determined, as in Table 1, according to Direction, Side, and Total, for

each S as well as the group. The number of trials to be predicted per group is 29. An example of this calculation, per error type, is provided in Table 5 where the number of correct predictions obtained by Model 1 are displayed. Once again the Dominant member is the right-hand name of the pair identifying the group.

A particular model's performance can be measured by adding up the respective correct predictions and arriving at a total number correct per column. Given this measure a comparison between two models can be made on the basis of the differences between these column scores. To determine the significance of such differences a statistical test is required that is sensitive to changes in these numbers. One that might have the desired properties is the one-way analysis of variance test. Under normal circumstances the one-way analysis of variance is used to test the null hypothesis that the items in the various test classes come from populations which have equal means. Unfortunately, the outputs of the alternative models cannot be described as coming from populations which have equal means. To do so would require being able to specify the populations' density functions -- a feat which, in the case of these simulation models, is not easy to perceive how to perform. Concurrently, although there is one metric by which a model's performance can be judged, it has nine values for each model. To employ an analysis of variance would imply a distribution function relating these nine values, when in fact it is the model's decision processes which determine the relations and as a consequence these values.

A less demanding, and correspondingly weaker, statistic is the Chi-square for n independent samples. The weakness of the Chi-square resides in the fact that it is usually impossible to compute its power. This situation occurs when there is no clear alternative against which it

Number of Correct Predictions Obtained by Model 1

Group	Non-Dominant Member			Dominant Member			Group		
	Dir.	Side	Total	Dir.	Side	Total	Dir.	Side	Total
JS & JB	20	16	13	26	22	21	25	21	21
ER & RF	25	22	22	27	27	26	28	25	25
JH & RB	24	21	20	29	24	24	29	24	24
TR & DA	15	14	12	23	20	20	20	16	16
DP & JP	20	23	16	16	26	14	18	24	14
CR & DS	21	16	15	19	24	18	21	21	17
AH & GB	17	19	13	17	17	12	16	18	12
DB & MG	17	13	8	21	14	13	20	13	11
FH & FV	22	14	12	27	20	18	24	19	15
OM & JK	15	18	12	20	16	16	19	17	16
JF & LB	28	18	18	20	19	11	23	16	12
LZ & EJ	20	13	11	23	19	16	23	18	15
CC & RA	20	14	14	15	14	10	22	16	15
BC & AJ	22	20	16	19	16	12	19	18	12
TMcC & OH	21	15	14	13	13	9	18	16	13
Total	307	256	216	315	291	240	325	282	238

Table 5

is being tested. The Chi-square is used when the test data fall into discrete categories, and when under the null hypothesis the theoretically expected number of cases for each cell can be deduced.

For example, the Chi-square test is applied by employing the formula:

$$\chi^2 = \sum_{i=1}^{r} \sum_{j=1}^{k} \frac{(O_{ij} - E_{ij})^2}{E_{ij}}$$

where O_{ij} = observed number of cases categorized in the ith row of the jth column.

E_{ij} = number of cases expected under Ho to be categorized in the ith row of the jth column.

It is the determination of the E_{ij} that present a problem. One approach would be to compute the E_{ij} on the basis of the simple random model discussed earlier. In this case the E_{ij} would represent the proportion of correct responses obtained by random draw from an urn where the probability of a correct response is either 0.5 or 0.25 as appropriate. A comparison between Model 1 and Model 2 would require one to measure the differences generated by their respective differences between their behavior and that of the random model. Such a testing procedure is unreasonably involved. It is also far too dependent upon a random device as a guide to good model behavior.

The proposed approach is to state the null hypothesis in terms of the behavior of one of the Models. An example of same would be: the number of correct responses obtained by Model 1 is the same (statistically) as those produced by Model 2. In this event the actual number of correct responses generated by Model 1 can now be treated as the expected number under Ho. In short, the behavior of Model 1 defines the values of the E_{ij}. Similarly, the number of correct responses produced by Model 2 become the values of the O_{ij}. Since the O_{ij} and the E_{ij} are drawn from independent samples, the test appears to be a valid application of the Chi-square. Moreover, it has a definite appeal as a method of comparing the behavior of models which produce a vector of interrelated outputs.

To measure the performance of Model 2 against that of Model 1 the following test is carried out:

(i) The null hypothesis is stated as: the number of correct responses obtained by Model 1 is the same as those produced by Model 2.

(ii) The data for the test are provided in Table 6.

	Non-Dominant Member			Dominant Member			Group		
	Dir.	Side	Total	Dir.	Side	Total	Dir.	Side	Total
$\underline{O}_i$(M2)	291	247	201	311	385	243	311	271	223
$\underline{E}_i$(M1)	307	256	216	315	291	240	325	282	238
$\underline{O}_i - \underline{E}_i$	-16	-9	-15	-4	-6	3	-14	-11	-15
$(\underline{O}_i - \underline{E}_i)^2/\underline{E}_i$	.84	.32	1.0	.05	.12	.04	.60	.43	.95

Table 6

(iii) From Table 6, $\chi^2 = 4.35$ with 8 degrees of freedom. This value is not significant at the .05 level. The null hypothesis is not rejected.

(iv) Notice, however, that in all but one case Model 1 produces more correct responses than does Model 2. Though these differences are not statistically significant, one can conclude that a better prediction is not obtained by using the last fifteen trials of Stage 1 to compute the Monitor Frequencies. In this regard it is also worth recalling the data of Table 3. Here it is evident that Monitor Freqencies based on fifteen trials are always less than or equal to those based on ten. One is therefore entitled to conclude that a lowering of Monitor Frequencies does not improve the performance of the group decision model.

C. Test on Sensitivity to Trials used by Mimic Procedure: Model 1 vs. Model 3

(i) The null hypothesis is stated as: the number of correct responses obtained by Model 1 is the same as those produced by Model 3.

(ii) The test data are provided in Table 7.

	Non-Dominant Member			Dominant Member			Group		
	Dir.	Side	Total	Dir.	Side	Total	Dir.	Side	Total
$\underline{O}_i$(M3)	313	260	224	308	293	243	330	284	239
$\underline{E}_i$(M1)	307	256	216	315	291	240	325	282	238
$\underline{O}_i - \underline{E}_i$	6	4	8	-7	2	3	5	2	1
$(\underline{O}_i - \underline{E}_i)^2/\underline{E}_i$	.12	.06	.30	.16	.01	.04	.08	.01	0

Table 7

(iii) From Table 7, $\chi^2 = 0.78$ with 8 degrees of freedom. This value is not significant and the null hypothesis is not rejected.

(iv) Despite the small χ^2 value Model 3 differs from Model 2 in that its behavior is slightly superior to that of Model 1. Except for one instance, Model 3 produces more correct responses than Model 1. These data suggest that there is some advantage in ignoring the first ten trials of an S's Stage 1 behavior. That the advantage is slight suggests that although S's decision behavior may stabilize during the latter trials of Stage 1, early response patterns are seldom abandoned completely. However, it would take a larger sample than that provided here plus a more intensive examination of each individual's behavior to explain in detail the discrepancy between these Models' behavior.

D. Test on Model 3 vs. Model 2

Since Model 3's behavior is slightly superior and Model 2's behavior is somewhat inferior to Model 1, it is worth examining whether the difference between Models 3 and 2 is statistically significant.

(i) The null hypothesis is: the number of correct responses obtained by Model 3 is the same as those produced by Model 2.

(ii) The test data are provided in Table 8.

	Non-Dominant Member			Dominant Member			Group		
	Dir.	Side	Total	Dir.	Side	Total	Dir.	Side	Total
$\underline{O}_i$(M2)	291	247	201	311	285	243	311	271	223
$\underline{E}_i$(M3)	313	260	224	308	293	243	330	284	239
$\underline{O}_i - \underline{E}_i$	-22	-13	-23	3	-8	0	-19	-13	-16
$(\underline{O}_i - \underline{E}_i)^2/E_i$	1.55	.65	2.36	.03	.22	0	1.1	.60	1.07

Table 8

(iii) From Table 8, $\chi^2 = 7.58$. This value is not significant at the .05 level. Hence, the null hypothesis is not rejected.

(iv) Once again the differences between the two Models are not significant. But it should be noted that the difference between Models 3 and 2 is somewhat larger than that between Models 1 and 2. Thus, while the discrepancies are not large, the tests on these parameter values have so far revealed Model 3 to be the best performer.

E. Tests on the Sensitivity to a Reversal of the Dominance Role

So far the parameter tests have been conducted with the dominant member of each group chosen according to the Conservative rule except for the four groups which are based on the data of Table 4. The question currently of interest is whether the behavior of Models 1 - 3 are significantly affected by a reversal of the Dominance role.

(i) The null hypotheses are: the number of correct responses obtained by Model 1 (Model 2, Model 3) is the same as those produced by Model 1' (Model 2', Model 3').

(ii) The test data are provided in Table 9.

(iii) From Table 9:

χ^2 for Model 1 vs. Model 1' = 41.69. This value is significant at the .05 level. The null hypothesis can be rejected.

χ^2 for Model 2 vs. Model 2' = 34.36. This value is significant at the .05 level. The null hypothesis can be rejected.

χ^2 for Model 3 vs. Model 3' = 35.82. This value is significant at the .05 level. The null hypothesis can be rejected.

(iv) It is clear that the effect of reversing the Dominance role is substantial. It can also be seen from Table 9 that very little of this difference is accounted for by the behavior of the Non-Dominant member. In other words, it is the behavior of the Dominant member and the group as a whole that is markedly affected by reversing Dominance. Since a poor simulation of the Dominant member's behavior leads to poor group predictions, the effect can be seen to reside in the behavior of this one member. That all three Models evince a similar effect is further evidence on the importance in the two-person group of the correct assignment of the Dominance role.

F. A. Cross-Check on the Above Results

The results of the tests on Models 1 - 3 are based on a reasonable, but weak statistic. The reason for employing it is that it accommodates the vector of outputs generated by each Model. However, if one considers solely the Total column of group responses (the right-most column in Table 5), then each Model could be represented as producing a sample of size fifteen of these numbers. Two such Models could then be tested by comparing the differences between the means of these two samples. Such a test ignores eight-ninths of the available data. But its compensation lies in its increased rigor.

Model 1 vs. Model 1'

	Non-Dominant Member			Dominant Member			Group		
	Dir.	Side	Total	Dir.	Side	Total	Dir.	Side	Total
$\underline{O}_i$(M1')	287	263	203	281	253	197	263	259	190
$\underline{E}_i$(M1)	307	256	216	315	291	240	325	282	238
$\underline{O}_i - \underline{E}_i$	-20	7	-13	-34	-38	-43	-62	-23	-48
$(\underline{O}_i - \underline{E}_i)^2/\underline{E}_i$	1.31	.19	.78	3.67	4.96	7.70	11.5	1.87	9.71

Model 2 vs. Model 2'

	Non-Dominant Member			Dominant Member			Group		
	Dir.	Side	Total	Dir.	Side	Total	Dir.	Side	Total
$\underline{O}_i$(M2')	283	253	193	270	246	187	272	255	192
$\underline{E}_i$(M2)	291	247	201	311	285	243	311	271	223
$\underline{O}_i - \underline{E}_i$	-8	6	-6	-41	-39	-56	-39	-16	-31
$(\underline{O}_i - \underline{E}_i)^2/\underline{E}_i$	.22	.15	.18	5.42	5.34	12.9	4.9	.94	4.31

Model 3 vs. Model 3'

	Non-Dominant Member			Dominant Member			Group		
	Dir.	Side	Total	Dir.	Side	Total	Dir.	Side	Total
$\underline{O}_i$(M3')	293	260	203	284	251	199	287	253	196
$\underline{E}_i$(M3)	313	260	224	308	293	243	330	284	239
$\underline{O}_i - \underline{E}_i$	-20	0	-21	-24	-42	-44	-43	-31	-43
$(\underline{O}_i - \underline{E}_i)^2/\underline{E}_i$	1.28	0	1.97	1.87	6.02	7.96	5.6	3.38	7.74

Table 9

The statistic that is employed to perform this task is the Randomization Test for Two Independent Samples.[1/] The statistic is the Student *t* and is defined by the formula:

$$t = \frac{\bar{A} - \bar{B}}{\sqrt{\frac{\Sigma(B - \bar{B})^2 + \Sigma(A - \bar{A})^2}{n_a + n_b - 2}\left(\frac{1}{n_a} + \frac{1}{n_b}\right)}}$$

where, $\bar{A}$ and $\bar{B}$ = the respective sample means

n_a and n_b = the respective sample sizes

To test, for example, the Total correct group responses of Model 1 and Model 2 one merely needs to compute the mean number correct for each Model, and the sum of the squares of the differences between each score and the mean. Since $n_a = n_b = 15$ the value of *t* for 28 degrees of freedom can be directly computed and examined for significance. The relevant values of this test are provided in Table 10 alongside those already obtained for the Chi-square.

The results in Table 10 compare moderately well with one another. However, for M(3) vs. M(3') the *t* value is greater than that obtained for M(1) vs. M(1'), while the respective values of χ^2 are in the reverse order. Also the difference between M(2) and M(2') is significant as measured by χ^2 though non-significant as measured by Student *t*. These discrepancies are a result of the *t* statistic being based only on one-ninth of the total data. Presumably, one could compute the *t* value for each of the nine columns. But it is not entirely clear what would be gained by such an undertaking.

1/ See, S. Siegel, Nonparametric Statistics, McGraw-Hill, New York, 1956, pp. 152-58, for a detailed discussion of this test.

A Comparison of χ^2 and Student t Tests

Null Hypothesis	χ^2 Statistic	Signif. at .05 level	Student t Statistic	Signif. at .05 level
M(1)=M(2)	4.35	No	0.56	No
M(1)=M(3)	0.78	No	0.0	No
M(3)=M(2)	7.58	No	0.64	No
M(1)=M(1')	41.69	Yes	1.86	Yes
M(2)=M(2')	34.36	Yes	1.22	No
M(3)=M(3')	35.82	Yes	2.06	Yes
At .05 level χ^2 = 15.51, Student t = 1.70				

Table 10

One would be faced with nine pairs of t values, some significant and some not. The problem would then be to decide upon their significance. As a result, it was decided to avoid this dilemma and accept the hazard of basing the cross-check on a single application of the Student t statistic.

3. Testing the Model Against a Simple Random Alternative

Before proceeding to compare the performance of the group decision model to that of other alternatives, a decision has to be made as to which Model to use. Models 1 and 3 are the obvious contenders. And as Model 3 is slightly superior it is this one that will be employed to represent the group decision theory in all further tests.

The simple random model, Model R, is based on the assumption that on each trial the four possible responses are equally likely events. Hence, one would expect Model R to generate the correct group response one-quarter of the time. Similarly, one would expect it to choose the correct Direction

and Side one-half of the time. To determine the significance of any differences between the behavior of Model 3 and Model R a statistic is required. The one selected as appropriate is the normal approximation to the binomial distribution, since the Models' outputs can be represented in terms of proportions correct instead of the actual numbers themselves. Accordingly, for Total group responses the normal density function (Model R) is defined by the moments $\mu = \hat{p} = .25$ and $\sigma = \sqrt{\hat{p}\hat{q}/n}$. For the Direction and Side responses the density function has the moments $\mu = \hat{p} = .50$ and $\sigma = \sqrt{\hat{p}\hat{q}/n}$.

(i) The null hypothesis is stated as: the proportion of correct responses obtained by Model 3 comes from the same population density functions which represent Model R under the two conditions.

(ii) The test results are presented in Table 11.

(iii) From Table 11 it is evident that in fourteen out of fifteen cases the Total proportion of correct predictions made by Model 3 differ significantly from those one would expect under Model R. For these data one can reject the null hypothesis.

(a) Model 3, however, only predicts a proportion of the Side decisions that are significantly different from Model R's in six out of fifteen cases or 40% of the time. This number is considerably lower than the 93% achieved on Total correct. But it is difficult to determine the significance of these numbers. Though one could treat each Significance column as a sample of binary responses, one would have to produce a theoretically expected number of same before one could apply a binomial test.

One approach would be to argue that since a rejection region of .05 was used in the original test, the expected value to use in the binomial test is P = .05. Using this value for P and x = 6, N = 15.

$$p(x) = \binom{N}{x} p^{x} Q^{N-x}$$

$$= \frac{15!}{6!\ 9!} (.05)^{6} (.95)^{9}$$

$$p(x) = 4.92 \times 10^{-5}$$

Thus, the probability of obtaining six out of fifteen significant differences, if the expected frequency is 0.05, is a very small number. For this test the data for the Side column also reject the null hypothesis.

On the other hand, it could well be argued that a P = .05 is too small, and on the grounds of "reasonableness" a P = .25 would provide a more exacting test. Using this value for P

$$p(x) = \binom{N}{x} p^{x} Q^{N-x}$$

$$= \frac{15!}{6!\ 9!} (.25)^{6} (.75)^{9}$$

$$p(x) = 9.0 \times 10^{-2}$$

Here the probability of obtaining six out of fifteen is nine in a hundred. Under this test one would not reject the null hypothesis. But the choice of a value for P is quite arbitrary. What these tests provide is the knowledge that if the true value of P is less than 0.25, then the data for the Side column can be used to reject the null hypothesis.

(b) From the above discussion it is clear that the data for the Direction column lead one to reject the null hypothesis. For here there are twelve out of fifteen cases where the proportion of correct predictions made by Model 3 differ significantly from those one would expect under Model R. Accordingly, using a value of P = 0.25 one obtains

$$p(x) = \frac{15!}{12!\ 3!} (.25)^{12} (.75)^{3}$$

$$p(x) = 8.1 \times 10^{-4}$$

Results on Test of Model 3 vs. Model R

Group	Proportion of Dir. Chosen Correctly	Signif. at the .05 level (1)	Proportion of Side Chosen Correctly	Signif. at the .05 Lev. (1)	Total Proport. Chosen Correctly	Signif. at the .05 Lev. (2)
JS & JB	.90	Yes	.69	Yes	.66	Yes
ER & RF	.97	Yes	.86	Yes	.86	Yes
JH & RB	1.00	Yes	.83	Yes	.83	Yes
TR & DA	.69	Yes	.59	No	.55	Yes
DP & JP	.72	Yes	.83	Yes	.59	Yes
CR & DS	.69	Yes	.79	Yes	.59	Yes
AH & GB	.59	No	.69	Yes	.48	Yes
DB & MG	.72	Yes	.45	No	.38	No
FH & FV	.83	Yes	.62	No	.48	Yes
OM & JK	.62	No	.62	No	.52	Yes
JF & LB	.76	Yes	.55	No	.41	Yes
LZ & EJ	.76	Yes	.55	No	.45	Yes
CC & RA	.72	Yes	.52	No	.48	Yes
BC & AJ	.66	No	.62	No	.41	Yes
TMcC & LH	.76	Yes	.59	No	.55	Yes

(1) At the .05 level Model 3 differs from Model R if the proportions correct for the former are ≥ 0.68.

(2) At the .05 level Model 3 differs from Model R if the proportions correct for the former are ≥ 0.41.

Table 11

(iv) Though the results listed in Table 11 are sufficient to reject Model R as a viable alternative, it is evident that Model 3 is weakest in correctly predicting a group's Side response. This failing could be a function of the procedures by which the model selects the group decision. But, if one looks at the data for Model 3 in either Table 7 or 8 it is clear that the number of correct predictions for Side are always less than those under Direction for both members of the group. As a result, it appears to be a failure to predict the individual responses that leads to the inferior performance on the group's Side decisions.

Chapter IV

Testing the Group Decision Model: Part II

1. Tests on the Model's Decision Processes

The task of subjecting the major processes of the group decision model to test is quite straightforward. It is carried out by constructing alternative models in which one or more of these processes are deleted. The behavior generated by these alternates is then compared in turn to that produced by the standard model -- Model 3. The objective is to discover whether any or all of the hypothesized processes can be deleted from the group model without impairing its predictive abilities.

(a) The first process to be tested in this manner is the procedure by which a group decision is made when disagreement occurs. From the discussion of these decision rules in Chapter II it will be recalled that one of their effects is to make the group's choice that of the Dominant member unless specific conditions prevail. To test for the absence of this process one cannot just dispense with it. For the model needs some decision rule with which to resolve conflicts. Furthermore, the effect of reversing the Dominance role has already been examined (see Chapter III, sec.2.E.) so that this is not what is required here. Manifestly, one could construct alternative methods for handling disagreements. But these would most likely interfere with the behavior of the Interpersonal Influence process which is interrelated with the Dominance rules for resolving conflicts.

The alternative that seems appropriate is to permit disagreements to be settled on an equally likely basis. That is to say, the decision rule is that of a binary random generator -- a tossed coin will do -- where the

probability of each member's decision being selected is one-half. The model incorporating this random resolution rule, Model DR, is in all other respects identical to Model 3. A comparison of their behavior is a test on the Dominance rules employed by the group decision model in so far as the alternative outputs are produced by a neutral or non-biased decision rule.

(b) The next process of interest is the Self-Influence process. This is the set of rules which allows each individual's Monitor to alter the decision behavior of its decision nets. Such alterations are initialized when a decision net's response on a particular trial appears on its own Violation List. The alternative that is used, Model SI, is constructed by deleting the Self-Influence procedure from the Monitor. Thus, a comparison between the behaviors of Model SI and Model 3 is a test on the contribution this process makes to the explanation of the groups' behavior.

(c) Model SI is devoid of a Self-Influence process. As such it represents a group model that operates solely with an Interpersonal Influence procedure. In order to test for the importance of this latter process one would construct a model in which this process was inactive. However, it must be remembered that the Interpersonal Influence process is only evoked after a number of disagreements have occurred and certain other conditions have been satisfied. As a result, in the simulation of any one group's behavior it may not be employed with any frequency. Clearly, the greater the level of conflict in a group the greater the likelihood of the process being activated. Consequently, there is little point in testing this process by itself unless one had a large enough sample of suitable groups. The test that appears instead to be more appropriate is to construct an alternative, Model AI, in which all influence processes are inoperative. These processes represent the model's adaptive (learning) capabilities,

And a comparison of Model AI and Model 3 will determine the contribution the influence procedures make to the model's explanatory power.

(d) The most parsimonious alternative that can be constructed from the group decision model is one in which the Monitor has no decision processes under its control, and where disagreements are resolved on an equally likely basis. Such a model would be made up out of a combination of Models DR and AI. It would behave as though each individual was unaffected by his own as well as his colleague's decisions. Moreover, it would regard the group's decision as in no way affecting the decisions of its members. In short, each individual would behave throughout the group trials as though he were still performing the experimental task by himself. The parsimonious model is labelled Model P. A comparison between it and Model 3 is a collective test on all the processes employed by the Monitor in the complete group decision model.

The tests on the model's decision processes are based, therefore, on four alternatives whose characteristics are displayed for easy reference in Table 1. Before these tests are conducted one must first make sure that the initial conditions for such tests are satisfied. For unless each group satisfies the model's initial conditions any tests on their subsequent behavior (the process tests) will be empirically vacuous.

The initial conditions which need to be satisfied can be stated as follows: During Stage 2 the inferred discrimination nets for each S must be capable of reproducing his decision behavior to some "satisfactory level." For if the model cannot account for the behavior of each S prior to the deletion of certain processes, how is one to adjudge the effect of such deletions? The only difficulty inherent in the specification of the initial conditions is the notion of what constitutes a "satisfactory

Alternative Models for Process Tests

	Replace Dominance Rule with Random Choice Rule	Delete Self-Influence Process	Delete Interpersonal Influence Process
Model DR	✓		
Model SI		✓	
Model AI		✓	✓
Model P	✓	✓	✓

Table 1

level." The procedure adopted here is to compute the total Direction and side errors made by Model 3 for each troup -- this is a summation of the errors made for each S. The normal approximation to the binomial distribution with $\mu = \hat{p} = .50$ and $\sigma = \sqrt{\hat{p}\hat{q}/n}$ where $n = 4 \times 29 = 116$, is then employed to provide a measure of the total errors permissible for a given group. Since there is an interaction between the decisions of the Dominant and Non-Dominant member a level of significance of 0.01 is used. From these specifications the number of allowable errors per group is 44.2. Thus, the decision rule becomes that of rejecting all groups, as not satisfying the initial conditions, if the sum of the Direction and Side errors for both members is greater than 44.2. The data for this test are provided in Table 2.

The results indicate that five groups do not meet the requisite standards. Manifestly, there are a number of ways in which these error rates can be explained. First, it could be argued that the model is not sufficiently sensitive to accommodate a diversity of behavior - these groups have merely exhibited behavior with which the model is unable to cope. There is some

Goodness-of-Fit of Initial Conditions

Group	Dir. + Side Errors, Non-Dom.	Dir. + Side Errors, Dominant	Total Dir. + Side Errors	Unsatisfactory Groups
JS & JB	24	10	34	
ER & RF	11	4	15	
JH & RB	10	5	15	
TR & DA	27	15	42	
DP & JP	13	13	26	
CR & DS	17	14	31	
AH & GB	22	23	45	✓
DB & MG	28	22	50	✓
FH & FV	21	12	33	
OM & JK	28	22	50	✓
JF & LB	12	19	31	
LZ & EF	24	19	43	
CC & RA	16	29	45	✓
BC & AJ	18	22	40	
TMcC & LH	21	29	50	✓

Table 2

evidence to support this claim, particularly if one looks at Tables 3 and 4 of Chapter III. From these data it is apparent that three of the five recalcitrant groups (AH & GB, CC & RA, and TMcC & LH) are ones in which the less conservative member takes the Dominant role. However, when the Dominant role is reversed, as in the parameter test, Sec. 2,E., the error rate for these

groups increases. Hence, the poor performance is not just a question of the assignment of the Dominant role.

A trial by trial inspection of the behavior during Stages 1 and 2 of these groups reveals that at least one member of each is highly unstable in his decision behavior. In Stage 1 instability is evinced by the number of times the Mimic Procedure has to add new nodes and responses during the last ten trials. During Stage 2 one expects the inferred decision nets to predict each S's decisions correctly for the first few trials. For the model is based upon the assumption that S's will continue to behave in Stage 2 as they did during the latter part of Stage 1. When S's change their bidding procedures at the beginning of Stage 2, this is taken as evidence of an instability in their decision behavior.

Additional evidence of the effects of instability is obtained by correlating measures on the behavior of S's from Stages 1 and 2. For Stage 1 one counts, as above, the number of times the Mimic Procedure added new nodes and responses during the last ten trials. (The Mimic Procedure adds new nodes when it is unable to predict correctly.) For Stage 2 one uses the total trials correctly predicted. One would expect that the greater the number of new nodes added during the last ten trials the poorer the prediction of Individual Stage 2 responses. Correlating these two sets of values for all thirty S's gives an $r = 0.63$.

A more rigorous test would be to ask a sample of S's to take part in Stage 3 immediately after completing Stage 1. This way one would duplicate the experimental conditions and would, at the same time, be able to determine how well the decision nets inferred from Stage 1 are able to explain subsequest individual behavior. In future investigations these data will be collected.

To accuse certain S's of being unstable in their bidding behavior does not excuse the model from being unable to accommodate such behavior. It merely highlights the model's inability to cope with S's who alter their behavior from Stage 1 to Stage 2. It is hoped that further study will identify some of the processes that the model needs if it is to be able to account for such changes. But, for the time being, these S's do not satisfy the model's initial conditions.

The tests on the model's processes, then, are divided into two parts. The first employes the entire sample of groups. The second excludes from the test data the five refractory groups. This procedure is employed in order to provide as strong a test as possible on the processes under consideration. For differences that are detected in the total sample ought to appear with greater significance in the reduced sample.

A. Tests on the Importance of the Dominance Rule: Model 3 vs. Model DR

The effect of replacing the Dominance rule with a random choice mechanism can be observed by comparing, by the Chi-square test, the behaviors of Model 3 and Model DR for the Total and Reduced samples.

(i) The null hypothesis is given by: the number of correct responses obtained by Model 3 is the same as those produced by Model DR.

(ii) The test data for both samples are provided in Table 3. It should be noted that differences will appear between these models only in the group decisions. Thus, data are provided for group columns alone.

(iii) For the Total sample, $\chi^2 = 16.95$ with 2 degrees of freedon (For $\alpha = .05$, $\chi^2 = 5.99$ with 2 d.f.) This value is significant at the .05 level. Hence, the null hypothesis can be rejected.

For the Reduced sample, $\chi^2 = 8.43$ which is significant at the .05 level. Therefore, the null hypothesis can also be rejected for the Reduced

Data of Model 3 vs. Model DR for Total Sample

	Group		
	Dir.	Side	Total
O_i(MDR)	294	248	194
E_i(M3)	330	284	239
$O_i - E_i$	-36	-36	-45
$(O_i - E_i)^2/E_i$	3.92	4.56	8.47

Data of Model 3 vs. Model DR for Reduced Sample

	Group		
	Dir.	Side	Total
O_i(MDR)	211	179	142
E_i(M3)	231	201	169
$O_i - E_i$	-20	-22	-27
$(O_i - E_i)^2/E_i$	1.73	2.4	4.3

Table 3

sample data.

(iv) The results of the two tests indicate that the Dominance rule is an important part of the group decision model. As the Chi-square value for the Total sample is much greater than for the Reduced sample, the Dominance rule contributes significantly to the correct choice of group decisions in the five unstable groups as well. As a result, whether it is the less or more conservative member who takes the Dominance role, it is clear that a model of two-person group behavior must include a process which accommodates the effects of this role on group choices.

B. Tests on the Self-Influence Process: Model 3 vs. Model SI

The importance of the Self-Influence process is determined by comparing the behaviors of Models 3 and SI for the Total and Reduced samples.

(i) The null hypothesis is: the number of correct responses obtained by Model 3 is the same as those produced by Model SI.

(ii) The test data are arrayed in Table 4.

(iii) For the Total sample, $\chi^2 = 11.81$ with 8 degrees of freedom. This value is not significant at the .05 level. The null hypothesis is not rejected.

For the Reduced sample, $\chi^2 = 15.58$ which is significant at the .05 level. The null hypothesis can be rejected for the Reduced sample.

(iv) The results of these tests are quite interesting. The Chi-square values indicate that the presence or absence of the Self-Influence process does not affect the model's predictions of the five recalcitrant groups. This is attested to by a $\chi^2 = 3.28$ for these groups. Though the five groups suggest that one should dispense with the Self-Influence process, the remaining test groups provide strong contrary evidence. Accordingly, it appears that the Self-Influence Process does represent part of the observed behavior. Furthermore, if attention is restricted to the stable decision-makers, Model 3 is a significantly better predictor of each S's as well as the group's decisions.

Data of Model 3 vs. Model SI for Total Sample

	Non-Dominant Member			Dominant Member			Group		
	Dir.	Side	Total	Dir.	Side	Total	Dir.	Side	Total
O_i(MSI)	293	240	203	319	266	225	315	261	231
E_i(M3)	313	260	224	308	293	243	330	284	239
$O_i - E_i$	-20	-20	-21	11	-27	-18	-15	-23	-8
$(O_i - E_i)^2/E_i$	1.28	1.54	1.97	.39	2.49	1.33	.68	1.86	.27

Data of Model 3 vs. Model SI for Reduced Sample

	Non-Dominant Member			Dominant Member			Group		
	Dir.	Side	Total	Dir.	Side	Total	Dir.	Side	Total
O_i(MSI)	200	167	144	221	186	157	213	178	159
E_i(M3)	220	177	159	219	217	179	231	201	169
$O_i - E_i$	-20	-10	-15	2	-31	-22	-18	-23	-10
$(O_i - E_i)^2/E_i$	1.82	.57	1.42	.02	4.43	2.7	1.4	2.63	.59

Table 4

C. Tests on All Influence Processes: Model 3 vs. Model AI

Having determined what happens to the model's behavior when the Self-Influence process is taken out, the next step is to test for the absence of both the Self- and Interpersonal Influence processes for the Total and Reduced samples.

(i) The null hypothesis is given by: the number of correct responses obtained by Model 3 is the same as those produced by Model AI.

(ii) The test data are provided in Table 5.

(iii) For the total sample, $\chi^2 = 18.86$ which is significant at the .05 level. For the total sample one can reject the null hypothesis.

For the Reduced sample, $\chi^2 = 21.0$ which is significant at the .05 level. The Reduced sample also permits one to reject the null hypothesis.

Data of Model 3 vs. Model AI for Total Sample

	Non-Dominant Member			Dominant Member			Group		
	Dir.	Side	Total	Dir.	Side	Total	Dir.	Side	Total
O_i(MAI)	280	234	195	305	272	221	307	259	219
E_i(M3)	313	260	224	308	293	243	330	284	239
$O_i - E_i$	-33	-26	-29	-3	-21	-22	-23	-25	-20
$(O_i - E_i)^2/E_i$	3.48	2.60	3.78	.03	1.51	1.99	1.60	2.20	1.67

Data of Model 3 vs. Model AI for Reduced Sample

	Non-Dominant Member			Dominant Member			Group		
	Dir.	Side	Total	Dir.	Side	Total	Dir.	Side	Total
O_i(MAI)	194	159	134	212	196	155	210	178	150
E_i(M3)	220	177	159	219	217	179	231	201	169
$O_i - E_i$	-26	-18	-25	-7	-21	-24	-21	-23	-19
$(O_i - E_i)^2/E_i$	3.08	1.83	3.92	.22	2.04	3.22	1.91	2.64	2.14

Table 5

(iv) There are three points of note about these data. The first is that once again the Reduced sample provides a greater difference between the models' behavior. This implies that the difference for the other groups is negligible. Indeed, $\chi^2 = 1.88$. Secondly, the value of the Chi-square for the Reduced sample asserts that the deletion of the influence processes from the model has a pronounced effect for these groups. That the Chi-square value is significant for the Total sample is a further indication of the importance of

these processes.

The third point relates to the Interpersonal Influence process itself. If one compares the Chi-square values obtained from the Reduced sample data of Tables 4 and 5, the difference is due to the Interpersonal Influence process. This difference, though modest, is in the right direction. It becomes quite significant, however, if one considers only those groups in which there is a substantial amount of disagreement. In other words, if both members always agree on what to do, the Interpersonal Influence process will not be evoked and its effect on behavior will be nil. To study its effects one requires frequent disagreement. Unfortunately, a number of the groups which generated the greatest disagreement are numbered among those who do not satisfy the model's initial conditions. But an inspection of the remaining, high disagreement groups (see Table 4, Chapter III; and Table 2 above) suggests that an Interpersonal Influence process is required if the model is to account for the observed behavior.

D. Tests on the Parsimonious Model: Model 3 vs. Model P

The final test on the model's processes is an attempt to discover whether as good or better predictions are obtained if all Monitor processes including the Dominance rule are dispensed with.

(i) The null hypothesis is given by: the number of correct responses obtained by Model 3 is the same as those produced by Model P.

(ii) The test data are provided in Table 6.

(iii) For the Total sample, $\chi^2 = 41.73$ which is significant at the .05 level. These data reject the null hypothesis.

For the Reduced sample, $\chi^2 = 39.03$ which also is significant at the .05 level. The Reduced sample rejects the null hypothesis.

Data of Model 3 vs. Model P for Total Sample

	Non-Dominant Member			Dominant Member			Group		
	Dir.	Side	Total	Dir.	Side	Total	Dir.	Side	Total
O_i(MP)	280	234	195	305	272	221	288	231	183
E_i(M3)	313	260	224	308	293	243	330	284	239
$O_i - E_i$	-33	-26	-29	-3	-21	-22	-42	-53	-56
$(O_i - E_i)^2/E_i$	3.48	2.60	2.78	.03	1.51	1.99	5.35	9.9	13.1

Data of Model 3 vs. Model P. for Reduced Sample

	Non-Dominant Member			Dominant Member			Group		
	Dir.	Side	Total	Dir.	Side	Total	Dir.	Side	Total
O_i(MP)	194	159	134	212	196	155	196	161	125
E_i(M3)	220	177	159	219	217	179	231	201	169
$O_i - E_i$	-26	-18	-25	-7	-21	-24	-35	-40	-44
$(O_i - E_i)^2/E_i$	3.08	1.83	3.92	.22	2.04	3.22	5.3	7.95	11.47

Table 6

(iv) The result of these tests is that Model P is a very poor predictor of group behavior. Accordingly, it is clear that the Monitor's decision processes are important contributors to the explanation of the test data. Though each process can, no doubt, be refined and improved, a model that ignores them completely is unable to account in a satisfactory manner for the observed decision-making behavior.

E. A Cross-Check on the Above Results

As in the case of the tests on the model's parameter values it is worth checking the results obtained by the Chi-square with those generated by an application of the Student *t* statistic. The results for both the Total and Reduced samples, including the statistical significance of same, are presented in Table 7.

In all but one case the values of the Student *t* correspond in significance to those of the Chi-square. The exception occurs with the data on the test of the Self-Influence process. The Chi-square value for the Reduced sample is just greater than, while that of the Student *t* is somewhat less than the value required

Summary of Test Results

Null Hypothesis Total S.	Reduced	χ^2 Statistic	Student *t* Statistic
M(3)=M(DR)	M(3)=M(DR)	16.95* (1) 8.43*(1)	2.06* 1.96* (2)
M(3)=M(SI)	M(3)=M(SI)	11.81 15.58*	0.34 0.71 (2)
M(3)=M(AI)	M(3)=M(AI)	18.86* 21.0*	1.78* 1.92* (2)
M(3)=M(P)	M(3)=M(P)	41.73* 39.03*	2.55* 3.29* (2)

* -- Denotes values significant at .05 level
(1) For 2 d.f. at .05 level χ^2 = 5.99
(2) For 18 d.f. at .05 level Student *t* = 1.73
For remaining values, significance level of χ^2 = 15.51, and that of Student *t* = 1.70.

Table 7

for significance at the .05 level. As noted earlier, the Student t uses one-ninth of the data employed by the Chi-square. Thus, this discrepancy is not hard to comprehend.

To summarize, both statistics lead one to reject the hypothesis that a simpler model -- one in which one or more of the Monitor processes are deleted -- will perform as well as or better than the model of group decision behavior as represented by Model 3.

2. Further Examination of the Results

Additional evidence of the model's capacities and shortcomings can be obtained by examining individual and group decisions in more detail. One such approach is to inspect the model's errors in group decisions in terms of the market situation prevailing on those trials. The questions of interest are: can these group errors be attributed to an inability to reproduce group decisions on particular market situations -- Win-Win for example? Or is it the case that these errors are distributed more or less evenly over all decision situations?

To discover the answers to these queries data are presented in Table 8 on the errors made (group decisions only) under each of the four market situations. As can be seen, there are two entries for each market state. The first represents the proportion of group predictions that are correct; the second records the number of occurrences of this market situation for the group.

From the mean values provided at the foot of each column of Total Occurrences it is clear that market situations do not occur on an equally likely basis. (It is necessary to talk in terms of the means as sample sizes are in many cases too small to compute significant differences).

Record of Group Predictions by Market Situation

Group	Win-Win		Win-Loss		Loss-Win		Loss-Loss	
	Prop. Corr.	Total No.	Prop. Corr.	Total No.	Prop. Corr.	Total No.	Prop. Corr.	Total No.
JS & JB	.70	10	.75	8	.75	8	.00	3
ER & RF	.73	11	1.00	9	.88	8	1.00	1
JH & RB	.67	12	1.00	9	1.00	7	.00	1
TR & DA	.67	9	.56	9	.50	10	.00	1
DP & JP	.45	20	1.00	2	1.00	6	.00	1
CR & DS	.40	15	.67	6	1.00	8		
AH & GB	.32	19	1.00	3	.71	7		
DB & MG	.12	17	.25	4	1.00	8		
FH & FV	.23	17	1.00	3	.88	8	.00	1
OM & JK	.50	12	.63	8	.56	9		
JF & LB	.40	10	.25	8	.60	10	.00	1
LZ & EJ	.47	17	.20	5	.67	6	.00	1
CC & RA	.38	8	.67	9	.45	11	.00	1
BC & AJ	.40	15	.80	5	.13	8	.00	1
TMcC & LH	.50	6	.67	9	.50	8	.50	6
Means	.53	13.2	.73	6.5	.72	8.1	.14	1.6

Table 8

each S's decision processes. The effects of S's decision instabilities are discussed above and need not be repeated. However, these errors are also partly a result of the model's failure to predict the resolution of all disagreements correctly. For, if the model predicts each member's response and yet fails to select the right group response, this will show up as an error in the group decision. Similarly, group errors can occur,

There is, as one would expect, a bias in favor of Win-Win and against Loss-Loss situations. The actual number of occurrences of same depends for each group on the processes they use. Conservative (low price) groups enjoy a preponderance of Win-Win outcomes, while less conservative groups obtain a greater proportion of Win-Loss and Loss-Win's.

That this record of market outcomes is dependent on conservativeness as defined by the model is evinced by comparing the Monitor Frequencies (Table 3, Chapter IV) for each group and the data in Table 8. Groups DP & JP, AH & GB, FH & FV, and LZ & EJ have Monitor Frequencies equal to or greater than those of the remainder. These groups generate seventeen or more instances of Win-Win. Groups with more risk-taking members, e.g. TR & DA, CC & RA, and TMcC & LH, have Monitor Frequencies equal to or less than the others and obtained nine or fewer instances of Win-Win. This comparison can be made more explicit by adding up the Monitor Frequencies of each group. The maximum possible value for a group is 4.0. The five conservative groups above have the values 3.5, 3.3, 3.4, 3.6, and 3.5 respectively. The three risky groups have the values 2.3, 2.6, and 2.8. It is evident, therefore, that conservativeness as defined by Monitor Frequencies implies a greater frequency of winning outcomes.

The mean values of the Proportion Correct columns indicate that the model predicts responses to Win-Loss and Loss-Win situations better than either of the two remaining ones. These outcomes comprise approximately half of the total (219 occurrences out of 435), while Win-Win make up virtually all of the rest. Though the model predicts the responses of some groups for Win-Loss and/or Loss-Win situations with great success its record is less impressive on Win-Win's, and very poor on Loss-Loss's. These errors are in part a consequence of the Mimic Procedure's failure to specify correctly

aside from erroneous predictions of responses, because the model predicted agreement when there was none or disagreement when it did not take place.

To inspect the model's capacity to generate agreement and disagreement a record was made of same for all trials. These data are recorded in Table 9. They are presented in much the same manner as used in Table 8. Under each market state there are two categories, Agree and Disagree. The pair of numbers records the proportion of same the model predicts and the total number of cases respectively. It should be noted that these data refer to the agreements and disagreements generated by the model without reference to whether the actual responses themselves are correct. (Data which include the latter condition are presented in Table 10).

A comparison of the Agree and Disagree columns in Table 9 indicates that in most cases the model is better at predicting the former. (Once again the smallness of the sample sizes precludes checking for statistical significance.) It is also apparent that in some groups there is a substantial amount of disagreement which the model is unable to account for. But even when these inadequacies are taken into consideration there is the added difficulty of correctly predicting the resolution of these disagreements. In short, the model can account adequately for individual responses and still have a poor record on group decisions.

In Table 10 the data of Table 9 are recorded to reflect the instances where the model predicts the complete set of individual responses. Comparing the entries of Tables 9 and 10 identifies the extent to which the Model predicts agreements and disagreements with incorrect responses. For example, group JS & JB are shown to have agreed on what to do in WW situations in nine out of the ten times. The model predicts that they will agree six out of nine times (Table 9), but predicts exactly what they did only

Record of Predicted Agreements and Disagreements

Group	Win-Win		Win-Loss		Loss-Win		Loss-Loss	
	Agree	Disagr.	Agree	Disagr.	Agree	Disagr.	Agree	Disagr.
JS & JB	.7; 9	.0; 1	.6; 5	.0; 3	.8; 5	.0; 3	.5; 2	.0; 1
ER & RF	.8; 6	.4; 5	1.0; 7	.0; 2	.8; 6	.0; 2	1.0; 1	
JH & RB	.7; 7	.0; 5	1.0; 8	.0; 1	.9; 7		.0; 1	
TR & DA	.8; 6	.7; 3	.6; 7	.0; 2	.8; 8	.5; 2	.0; 1	
DP & JP	.9;13	.3; 7	1.0; 2		1.0; 6		.0; 1	
CR & DS	1.0; 5	.2;10	.6; 5	.0; 1	.9; 8			
AH & GB	.9;13	.5; 6	.3; 3		.9; 7			
DB & MG	.9;12	.2; 5	.3; 3	1.0; 1	.8; 6	.0; 2		
FH & FV	.9; 7	.1;10	.7; 3		.8; 6	.0; 2		1.0; 1
OM & JK	.6; 5	.1; 7	.7; 7	1.0; 1	.7; 7	.5; 2		
JF & LB	.8; 6	.0; 4	.7; 7	.0; 1	.6; 7	.0; 3	1.0; 1	
LZ & EF	1.0; 9	.1; 8	.6; 5		.8; 4	.0; 2	1.0; 1	
CC & RA	.8; 4	.3; 4	.6; 7	.0; 2	.7; 6	.2; 5		1.0; 1
BC & AJ	.9; 7	.4; 8	.7; 3	.5; 2	.8; 6	1.0; 2		1.0; 1
McC & LH	1.0; 2	.8; 4	.0; 1	.1; 8	1.0; 3	.4; 5	.5; 4	.5; 2

Table 9

three out of nine times (Table 10). For this group half of these errors are due to faulty responses for both S's which just happen to agree with one another. Group ER & RF present, on the other hand, a case where all entries in both Tables are the same. Since the model is never corrected -- put back "on track" -- the result is a tendency to reinforce its own mistakes in cases like JS & JB. This tendency is further strengthened by the effects of the influence processes. If the model does not predict the Dominant member's responses correctly, and if

Record of Predicted Responses

Group	Win-Win		Win-Loss		Loss-Win		Loss-Loss	
	Agree	Disagr.	Agree	Disagr.	Agree	Disagr.	Agree	Disagr.
JS & JB	.3; 9	.0; 1	.6; 5	.0; 3	.8; 5	.0; 3	.0; 2	.0; 1
ER & RF	.8; 6	.4; 5	1.0; 7	.0; 2	.8; 6	.0; 2	1.0; 1	
JH & RB	.6; 7	.0; 5	1.0; 8	.0; 1	.9; 7		.0; 1	
TR & DA	.7; 6	.0; 3	.1; 7	.0; 2	.5; 8	.5; 2	.0; 1	
DP & JP	.5;13	.0; 7	1.0; 2		1.0; 6		.0; 1	
CR & DS	.4; 5	.1;10	.4; 5	.0; 1	.9; 8			
AH & GB	.4;13	.0; 6	.3; 3		.7; 7			
DB & MG	.0;12	.2; 5	.3; 3	.0; 1	.8; 6	.0; 2		
FH & FV	.3; 7	.0;10	.7; 3		.8; 6	.0; 2		1.0; 1
OM & JK	.4; 5	.0; 7	.4; 7	.0; 1	.3; 7	.0; 2		
JF & LB	.3; 6	.0; 4	.3; 7	.0; 1	.4; 7	.0; 3	.0; 1	
LZ & EJ	.4; 9	.1; 8	.2; 5		.5; 4	.0; 2	.0; 1	
CC & RA	.3; 4	.3; 4	.4; 7	.0; 2	.3; 6	.0; 5		.0; 1
BC & AJ	.3; 7	.0; 8	.7; 3	.5; 2	.0; 6	.0; 2		1.0; 1
McC & LH	1.0; 2	.0; 4	.0; 1	.0; 8	.7; 3	.0; 5	.3; 4	.0; 4

Table 10

disagreements are frequent, e.g. CC & RA and BC & AJ, then the other member's behavior will be altered by the inclusion of erroneous responses in his decision net. Though this will lead to less frequent discord, it will also produce less accurate group as well as individual predictions.

Given these many pitfalls and the evidence of the model's defects, it is quite surprising that it performs as well as it does. Although other models of the same processes are not available for comparative testing, it should by now be clear

how one might construct same. One route would be to start from a different and perhaps simpler base, and proceed to demonstrate that the same data can be accounted for by an alternative set of mechanisms. Another route would be to take the model presented here and by further investigation refine and improve upon its hypotheses. One such change which seems to be required is to permit the Dominance role to shift back and forth between members during the group phase. For observations suggest that one member is not always assigned the Dominant position throughout the entire set of trials. To incorporate such a mechanism, however, a procedure would be required by which Dominance can be inferred on a trial by trial basis. This in turn might well require the model to draw upon additional data about S's behavior. Indeed, it might lead to a definition of Dominance in terms of more customary psychological characteristics which are in turn related to and evinced by S's decision behavior.

Manifestly, there are many directions in which research on these processes can proceed. Though such a statement is true of most models of human behavior, the points of particular interest in this case are: (i) there is a simple, replicable experimental task with which sequentially linked behavior of both individuals and groups can be generated; (ii) there is a model that can infer the decision processes of individuals from the data of their behavior; (iii) the model incorporates several hypotheses about learning and interpersonal influence which are central to the study of group behavior; (iv) progress is frequently more rapid when one builds upon the replicable work of others; and (v) until other comparable, process models are constructed, there is no completely satisfactory way of judging the performance of this or any other such decision model.

Chapter V

The Permanence of the Presumed Influence

From the data of the last chapter it is apparent that the two influence processes contribute substantially to the model's predictive capacity. One is entitled to infer from these results that Self as well as Interpersonal Influence takes place, and that the model's processes are one way of representing such behavior. In effect, there are grounds for arguing that when influence takes place it is reflected in a change in decision behavior, and that these changes can be represented by alterations in the relevant discrimination nets.

Given this schema for representing influence, and given that the model accounts, in part, for the observed behavior, a query immediately arises as to the permanence of such alterations in S' decision behavior. During the group decision phase it is clear that S's alter their behavior to be in accord with their colleagues. But it is an open question as to whether S's will continue to exhibit influenced behavior if they are requested after Stage 2 to perform the experimental task by themselves. It will be recalled that the experimental design included a third stage where S's were asked to do the task by themselves for thirty trials. Thus, the data generated during Stage 3 are used as the basis from which to test for the permanence of the influence effected during Stage 2.

Since all S's participate in Stage 3 one can divide the total sample into two classes: those who were the Dominant member in their group and those who were not. The Non-Dominant members were subject to more influence attempts. Hence, one would expect their Stage 3 behavior to provide

clearer evidence as to whether their behavior has been permanently altered.

Before proceeding to describe the tests in detail, it is first necessary to define the null hypotheses. If participation in group decisions has no lasting effect upon an individual's behavior, then one should be able to explain his Stage 3 behavior by using the decision net which represented his behavior at the beginning of Stage 2. In other words, the discrimination net built by the Mimic Procedure will be sufficient to account for S's Stage 3 behavior if the effects of group decision-making can be ignored.

An alternative position would be to argue that the group experience has a lasting effect upon an individual's behavior. In this event, the discrimination nets which represent them at the end of Stage 2 are the ones to be used in explaining the data of Stage 3. A variant of this alternative would be to employ as the explanatory discrimination net the one that results from Model SI. This net will only contain the effects of the Interpersonal Influence process. Its use is rationalized by arguing that such Self influence as takes place during the group phase is a response to the situation at the time and will not carry over to Stage 3.

These alternatives are used to define three models of individual Stage 3 behavior. Model A uses the decision nets generated by the Mimic Procedure at the end of Stage 1. It represents the hypothesis that the effects of group decision-making can be ignored. Model B incorporates the decision nets that result from Model SI at the end of Stage 2. Accordingly, it stands for the case where the effects of interpersonal influence are considered important contributors to the explanation of Stage 3 behavior. The third and last hypothesis, Model C, employs the decision nets that

result from Model 3 at the end of Stage 2. This model represents the claim that the effects of both influence processes must be considered if the data of Stage 3 are to be explained.

Given these models the null hypotheses can then be stated as:

(i) The number of correct responses obtained by Model A is the same as those produced by Model B.

(ii) The number of correct responses obtained by Model A is the same as those produced by Model C.

The tests used are those of the Chi-square and the Student t. Since one is dealing with responses of individuals there are only three columns of scores. Hence, Chi-square has 2 degrees of freedom which is somewhat low for a proper application of this statistic. On the other hand, the Student t now employs one-third of the total data, and as a consequence is a stronger test than it was before.

The Chi-square test data for the Non-Dominant and Dominant members are presented in Tables 1 and 1a.

Data of Model A vs Model B

	Non-Dominant S's			Dominant S's		
	Dir.	Side	Total	Dir.	Side	Total
O_i (MB)	300	249	206	307	254	209
E_i (MA)	315	251	212	310	256	213
$O_i - E_i$	-15	-2	-6	-3	-2	-4
$(O_i - E_i)^2/E_i$	.75	.02	.18	.03	.02	.08

Table 1

Data of Model A vs Model C

	Non-Dominant S's			Dominant S's		
	Dir.	Side	Total	Dir.	Side	Total
O_i (MC)	311	242	208	315	249	204
E_i (MA)	315	251	212	310	256	213
$O_i - E_i$	-4	-9	-4	5	-7	-9
$(O_i - E_i)^2/E_i$	.05	.34	.08	.08	.20	.40

Table 1a

The values of Chi-square from Table 1 are $\chi^2 = 0.95$ and $\chi^2 = 0.13$ for Non-Dominant and Dominant respectively. From Table 1a they are $\chi^2 = 0.47$ and $\chi^2 = 0.68$ respectively. None of these values is significant at the .05 level. Hence, the null hypotheses cannot be rejected for either sample of individuals.

As one might expect, the Chi-square values are slightly larger if one considers those individuals who are members of the Reduced sample groups. The values are given in Table 2, and they are non-significant at the .05 level. This absence of significance is evident in the Student t scores which are also presented in Table 2.

It should be noticed, however, that in both Tables Model A produces the superior results. Thus, one can conclude that these S's were not permanently influenced by their group decision experience. Though this may strike the reader as strange, the data are surprisingly clear. During Stage 3 S's behaved as though they remembered how they played in Stage 1 and preferred this method to that which they participated in during Stage 2.

Summary of Test Results

Null Hypothesis Total Sample Reduced		χ^2 Statistic	Signif. at .05 level	Student t Statistic	Signif. at .05 level
M(A) = M(B)		0.95, 0.13	No, No	0.46(1), 0.24(1)	No, No
	M(A) = M(B)	2.38, 0.01	No, No	1.60, 0.15	No, No
M(A) = M(C)		0.47, 0.68	No, No	0.21(1), 0.58(1)	No, No
	M(A) = M(C)	1.25, 0.15	No, No	1.49, 0.29	No, No

At .05 level with 2 d.f. $\chi^2 = 5.99$

At .05 level with 18 d.f. $t = 1.73$

(1) At .05 level with 28 d.f. $t = 1.70$

Table 2

From the data of Tables 1 and 1a it is apparent that Model A has the best predictive record. Accordingly, the next step is to compare its behavior with that of the random model used earlier (see Chapter III, Sec. 3). Though a comparison with a random response generator is not as neat and tidy as one would like, the data are presented in Table 3 in a manner similar to that used in Table 11, Chapter III.

The results in Table 3 are, in part, surprisingly good. For if one considers the two columns of Total proportion correct, Model A is performing significantly better than one would achieve by rolling appropriately sided die. What these data suggest is that the discrimination nets produced by the Mimic Procedure do represent, to a considerable degree,

Results on Test of Model A vs Model R

	Non-Dominant S's			Dominant S's		
	Prop. of Dir. Chosen Correctly	Prop. of Side Chosen Correctly	Total Prop. Chosen Correctly	Prop. of Dir. Chosen Correctly	Prop. of Side Chosen Correctly	Total Prop. Chosen Correctly
JS & JB	.83*	.59	.59*	.69*	.52	.45*
ER & RF	.69*	.59	.48*	.83*	.66	.59*
JH & RB	.90*	.72*	.69*	.83*	.69*	.55*
TR & DA	.59	.45	.35	.86*	.69*	.66*
DP & JP	.79*	.62	.55*	.69*	.69*	.52*
CR & DS	.83*	.55	.48*	.66	.66	.52*
AH & GB	.69*	.66	.52*	.55	.38	.31
DB & MG	.41	.48	.28	.52	.55	.38
FH & FV	.59	.66	.48*	.86*	.59	.52*
OM & JK	.55	.52	.28	.52	.48	.35
JF & LB	.86*	.66	.62*	.62	.69*	.45*
LZ & EJ	.79	.48	.45*	.69*	.45	.41*
CC & RA	.83*	.62	.59*	.90*	.69*	.69*
BC & AJ	.76*	.48	.45*	.69*	.52	.41*
TMcC & LH	.79*	.59	.52*	.79*	.62	.55*

* -- implies that the value is significant at the .05 level.

Table 3

the decision behavior of these S's. The decision nets not only proved to be viable bases for the explanation of group behavior, but they can also be applied directly to account for each S's subsequent individual behavior.

The record of proportions of Sides chosen correctly is poor. One could subject these data to the binomial test as before, but there is little to be gained by doing so. For the results on Direction and Total columns will pass such tests while those of the Side columns will not.

What is perhaps of greater interest is to note the data of one or two specific groups, in particular ER & RF, and JH & RB. Model A accounts for a substantial amount of their bidding behavior. If one looks back at the data of Table 11, Chapter III, it is apparent that Model 3 accounts for a considerable amount of their Stage 2 behavior. These results suggest that these individuals had stable decision rules. That which is sufficient to account for their Stage 1 behavior is also sufficient to account for their subsequent group and individual behavior. In keeping with this line of reasoning one would therefore expect those groups for which Model 3 was a poor predictor to be unacceptably explained by Model A. Model 3 had considerable difficulty with groups DB & MG, and OM & JK. In Table 3 it is clear that Model A was unable to account for much of their Stage 3 behavior. In effect, these individuals are non-stable. They decided during Stages 1 and 2 to alter their decision rules more rapidly than the model is able to accommodate.

These data point out quite clearly the group decision model's strong as well as weak points, to wit: If individuals maintain a set of decision procedures it is possible both to infer what these rules are and account for their subsequent group or individual behavior. If they continue to alter their decision rules as the experiment progresses the model is not

capable of keeping up with and accounting for their behavior. In brief, the model is much better at accounting for stable rather than unstable decision behavior. A more adaptive model, it is hoped, could encompass that which the current one is unable to. And further research is being conducted to discover the processes which will permit the group decision model to explain the data of recalcitrant individuals and groups.

Chapter VI

Summary and Conclusions

The objective of this research has been to develop the rudiments of a testable theory of group decision-making behavior. At the beginning of the paper five problems were identified. It was felt that answers would have to be provided for same if such a theory was to be constructed. Having presented both the theory and some test data it is now appropriate to assess the merit of the answers that this theory provides.

The first problem concerned the choice of a basic unit for the theory. Ought it to be the group itself or its individual members? The approach chosen was to focus upon the individual. It was hypothesized that if one could develop an adaptive theory of individual behavior, then a group's behavior would be a predictive resultant of the interaction of models of such individuals. The theoretical justification for relying upon a theory of individual behavior forms what was called the second postulate of invariance. It posits the existence of certain invariances between the structure of individual and group decision processes. It permits one to infer the behavior of a group from a knowledge of the decision processes of its participants. In effect, it entitles one to reduce theories of group decision-making to the level of the individual units.

The theory itself is based upon information processing theories of individual behavior. This approach was chosen as it permits the specification of decision processes in greater, testable detail than any other theoretical system. Indeed, it should be noted that the theory of group decision behavior is endowed with no more capabilities than are found in

other theories of human decision-making behavior (Simon & Kotovsky, 1963). For example, the theory postulates that each individual is capable of developing his decision rules in terms of the attributes of the experimental task, e.g. the decision situations WW, WL, LW, LL; previous responses; etc. The theory also posits that once an individual has constructed a rule he is capable of employing it whenever it is called for, i.e., whenever it is activated by the stimulus-situation. In addition, the theory is provided with the ability to notice both differences and similarities between symbols, and is able to keep track of a small number of such symbols in immediate memory at one time. The remaining properties are described in detail in Chapters I and II and need not be repeated. The important point is that a theory composed of these properties is capable of accounting for the decision behavior of both individuals and groups. For the test data indicate that the theory proposed in this paper can be used as the basis for a theory of group behavior. This in turn implies that the second postulate of invariance has empirical merit.

Given a theory of group behavior that is based upon the behavior of its members, the next question to be resolved is how to determine the decision behavior of those individuals. The solution proposed by this research is to give the theory of individual behavior the task of learning to behave like (mimic) the subjects in question. To do this a record must be available of the requisite decision behavior. That such a procedure generates the desired decision rules is evidenced by the theory's ability to predict each S's decision both during and after the group experience. The main failing of the present theory is its inability to accommodate unstable decision behavior. But, if S's maintain their decision rules, the theory is able to generate discrimination nets which in turn can be used to account for their subsequent behavior.

The next two problems are concerned with identifying the leader-follower relation and the effects on decision behavior of the group decision process. The theory resolves the former by assigning as leader the more conservative member of each group. This rule is based upon the supposition that there is a conservative social norm, relevant to behavior in market situations, prevalent in the populations from which subjects were drawn. This supposition turned out to be false for the sample taken from the population of undergraduate engineers. It was supported, however, by the sample of graduate students in industrial administration. In the latter case the more conservative member was the leader in nine out of ten groups. The theory's solution, while adequate for samples drawn from graduate students of business, is not a general solution to the problem. Such a conclusion must not lead one to ignore the importance of selecting the leader correctly. For, if the leadership (Dominance) role is reversed, the theory's predictive ability is much reduced.

The effects of group participation are accounted for in the theory by two procedures: Self and Interpersonal Influence processes. Both processes are a part of each individual's Monitor and are activated by it whenever the appropriate conditions are satisfied. That these processes are only rough approximations is readily admitted. That they contribute substantially to the explanation of the observed behavior is evinced by the empirical tests. Consequently, the behavior they represent cannot be ignored, and processes like them must be included in any such theory of group decision-making.

The final problem posed at the start was that of designing an experimental task and environment which would provide the requisite test data. The experiment used in this research has many attractive features. It

permits both individuals and groups to generate observable, sequentially linked behavior. The task is simple and yet subjects do not arrive with any "ready-made" procedures for dealing with it. As there are no "correct" strategies, subjects develop decision rules based upon attributes and values of the task that come to their attention. In short, subject behavior is task dependent. Such a situation makes the inference of their decision rules somewhat easier. For, if subjects brought decision rules with them into the experiment, their characteristics would not depend principally on the task itself. This would increase the difficulty of inferring their decision rules from their behavior. That the experiment does generate data from which decision rules can be inferred is evident from the test results.

Given a replicable experimental task and a theory that is sufficient to account for the behavior of two person groups, the next important step would appear to be the extension of the theory to include triads. The introduction of a third person raises a number of intriguing questions: Can the theory as stated, or with minor modifications, account for the pattern of coalitions that emerge? Can it also accommodate such bargaining as occurs, and the effects of same on the decision behavior of each individual.

What is being suggested is a further test on the theory's ability to explain group decision-making behavior. For, if it can be shown to be sufficient to account for three person groups, other extensions become easier to foresee. Though the process of adding a third person has just begun there does not appear to be any reason why this theory of group decision behavior will not encompass the behavior of triads as readily as it has that of the dyiads reported here.

BIBLIOGRAPHY

Blake, R.R., and Mouton, J.S., "The Experimental Investigation of Interpersonal Influence," in A.D. Biderman and H. Zimmer, (eds), The Manipulation of Human Behavior, New York: John Wiley & Sons, 1961, pp. 216-276.

Blau, P.M., and Scott, W.R., Formal Organizations, San Francisco: Chandler Press, 1962.

Brodbeck, M., "Models, Meaning, and Theories," in L. Gross, (ed), Symposium on Sociological Theory, Evanston: Row, Peterson & Co., 1959, pp. 373-403.

Bruner, J.S., "On Perceptual Readiness," Psychological Review, 1957, Vol. 64, pp. 123-152.

Bruner, J.S., Goodnow, J.J., and Austin, G.A., A Study of Thinking, New York: John Wiley & Sons, 1957.

Cartwright, D., and Zander, A., (eds), Group Dynamics: Research and Theory, Evanston: Row, Peterson & Co., (2nd ed.) 1960.

Cartwright, D., "Influence, Leadership, Control," in J. G. March, (ed), Handbook of Organizations, Chicago: Rand McNally & Co., 1965, pp. 1-47.

Clarkson, G.P.E., Portfolio Selection: A Simulation of Trust Investment, Englewood Cliffs: Prentice-Hall, 1962.

Clarkson, G.P.E., and Pounds, W.F., "Theory and Method in the Exploration of Human Decision Behavior," Industrial Management Review, 1963, Vol. 5, pp. 17-27.

Clarkson, G.P.E., and Tuggle, F.D., "Toward a Theory of Group Decision Behavior," Behavioral Science, 1966, Vol. 11, pp. 33-42.

Collins, B.E., and Guetzkow, H., A Social Psychology of Group Processes for Decision-Making, New York: John Wiley & Sons, 1964.

Cyert, R.M., and March, J.G., A Behavioral Theory of the Firm, Englewood Cliffs: Prentice-Hall, 1963.

Edwards, W., "Dynamic Decision Theory and Probabilistic Information Processing," Human Factors, 1962, Vol. 2, pp. 59-73.

Eglington, P.C., "The Bid Maker: An Information Processsing Model," Unpublished S.M. thesis, Sloan School of Management, M.I.T., 1965.

Estes, W.K., "The Statistical Approach to Learning Theory," in S. Koch, (ed), Psychology: A Study of a Science, New York: McGraw Hill, 1959, Vol. II, pp. 380-491.

Feigenbaum, E.A., "The Simulation of Verbal Learning Behavior," in E. A. Feigenbaum and J. Feldman, (eds), Computers and Thought, New York: McGraw-Hill, 1963, pp. 297-309.

Feldman, J., Tonge, F.M., and Kanter, H., "Empirical Explorations of a Hypothesis Testing Model of Binary Choice Behavior," Santa Monica: System Development Corp., 1961, No. SP-546.

Festinger, L., A Theory of Cognitive Dissonance, Evanston: Row, Peterson & Co., 1957.

Festinger, L., Conflict, Decision, and Dissonance, Palo Alto: Stanford University Press, 1964.

Gelernter, H.L., Hansen, J.R., and Loveland, D.W., "Empirical Explorations of the Geometry Theory Machine," Proceedings of the Western Joint Computer Conference, 1960, pp. 145-159.

Gullahorn, J., and Gullahorn, J., Homunculus: A Simulation of Social Interaction, East Lansing: Michigan State University Press, 1962.

Hayes, J.R., "Problem Topology and the Solution Process," Journal of Verbal Learning and Verbal Behavior, 1965, Vol. 4, pp. 371-379.

Homans, G.C., Social Behavior: Its Elementary Forms, New York: Harcourt, Brace and World, 1961.

Kogan, N., and Wallach, M.A., Risk Taking: A Study in Cognition and Personality, New York: Holt, Rinehart and Winston, 1964.

March, J.G., "An Introduction to the Theory and Measurement of Influence," American Political Science Review, 1955, Vol. 49, pp. 431-451.

March, J.G., and Simon, H.A., Organizations, New York: John Wiley & Sons, 1958.

Miller, G.A., Galanter, E., and Pribram, H.K., Plans and the Structure of Behavior, New York: Holt, Rinehart and Winston, 1960.

Minsky, M.L., "Steps Towards Artificial Intelligence," in E. A. Feigenbaum and J. Feldman, (eds), Computers and Thought, New York: McGraw-Hill, 1963, pp. 426-450.

Nagel, E., The Structure of Science, New York: Harcourt, Brace and World, 1961.

Newell, A., Shaw, J.C., and Simon, H.A., "Empirical Explorations of the Logic Theory Machine," Proceedings of the Western Joint Computer Conference, 1957, pp. 218-230.

Newell, A., Shaw, J.C., and Simon, H.A., "Elements of a Theory of Human Problem Solving," Psychological Review, 1958, Vol. 65, pp. 151-166.

Newell, A., Shaw, J.C., and Simon, H.A., "Chess-Playing Programs and the Problem of Complexity," I.B.M. Journal of Research and Development, 1958, Vol. 2, pp. 320-325.

Newell, A., et. al. (eds), Information Processing Language V Manual, Englewood Cliffs: Prentice-Hall (2nd ed.), 1964.

Oppenheim, P., and Putnam, H., "Unity of Science as a Working Hypothesis," in H. Feigl, et al (eds), Minnesota Studies in the Philosophy of Science, University of Minnesota Press, 1958, Vol. II, pp. 3-36.

Pounds, W.F., "A Study of Problem Solving Control," Unpublished Ph.D. Dissertation, Carnegie Institute of Technology, 1964.

Rapoport, A., "A Study of Human Control in a Stochastic Multistage Decision Task," Behavioral Science, 1966, Vol. 11, pp. 18-32.

Reitman, W.R., Cognition and Thought, New York: John Wiley & Sons, 1965.

Siegel, S., Nonparametric Statistics, New York: McGraw-Hill, 1956.

Simon, H.A., Models of Man, New York: John Wiley & Sons, 1957.

Simon, H.A., and Kotovsky, K., "Human Acquisition of Concepts for Sequential Patterns," Psychological Review, 1963, Vol. 70, pp. 534-546.

Taylor, D.W., "Decision Making and Problem Solving," in J.G. March, (ed), Handbook of Organizations, Chicago: Rand McNally & Co., 1965, pp. 48-86.

Thibaut, J.W., and Kelley, H.H., The Social Psychology of Groups, New York: John Wiley & Sons, 1959.