https://ntrs.nasa.gov/search.jsp?R=19670021786 2018-05-25T16:23:54+00:00Z

11-110733

SURVEYOR
Project File
File
From

SURVEYOR SPACECRAFT SYSTEM

LRC 65-385

JPL-B00556
LIBRARY COPY
NOV 1 1965
LANGLEY RESEARCH CENTER
LIBRARY, NASA
LANGLEY STATION
HAMPTON, VIRGINIA

JUNE 1963

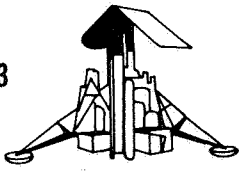

VOLUME I

Final Sterilization Report

GPO PRICE $
CFSTI PRICE(S) $
Hard copy (HC) 3.00
Microfiche (MF) .65
ff 653 July 65

HUGHES

HUGHES AIRCRAFT COMPANY
SPACE SYSTEMS DIVISION

N67-31115
(ACCESSION NUMBER) (THRU)
121 (PAGES) 1 (CODE)
CR-85872 (NASA CR OR TMX OR AD NUMBER) 31 (CATEGORY)
FACILITY FORM 602

SSD 3372R

R. J. VARGA
PROJECT ENGINEER, STERILIZATION

D. O. MARRIAGE
HEAD, SYSTEM TEST ENGINEERING
AND OPERATIONS SECTION

PPROVED:

W. D. NICHOLS
HEAD, SYSTEMS ENGINEERING DEPARTMENT

Surveyor Spacecraft System

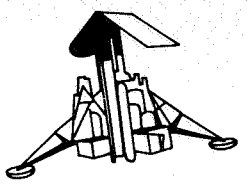

VOLUME I

Final Sterilization Report

•

HUGHES

HUGHES AIRCRAFT COMPANY
SPACE SYSTEMS DIVISION

•

SSD 3372R

PRECEDING PAGE BLANK NOT FILMED.

ACKNOWLEDGMENT

This report represents the coordinated effort of many activities, both internal and external to Hughes Aircraft Company with the main objective of meeting the contractual requirements in an efficient and economical manner. Special recognition to all contributors is not feasible here; however, coordination and implementation of the sterilization program was chiefly the responsibility of the System Engineering Department and the Mission Operations Department of the Surveyor Spacecraft Laboratory. Qualification of components and materials and verification of sterilization process techniques were undertaken by the Materials Technology Department of the Components and Materials Laboratory. Subcontractors who conducted individual experimentation include Thiokol Chemical Corporation, Elkton, Maryland; Reaction Motor Division, Thiokol Chemical Corporation, Denville, New Jersey; and Dynamic Science Corporation, South Pasadena, California. The latter organization, which assisted as a consultant, was represented by Dr. John B. Opfell whose perception added great insight to sterilization and to the solution of some of its problem areas.

Acknowledgment is made to Myra Willard and L. Manning for their assistance in preparing this report.

PRECEDING PAGE BLANK NOT FILMED.

CONTENTS

	Page
1. INTRODUCTION	
Scope	1-1
Establishment of Requirements	1-2
Operational Plans and Procedures	1-3
Test Plans and Procedures	1-5
Reliability	1-7
2. STERILANT COMPATIBILITY STUDIES OF SURVEY OR MATERIALS AND COMPONENTS	
Literature Search	2-1
Experimental Studies	2-22
3. STERILE TECHNIQUE	
Biological Evaluation Studies	3-1
Ethylene Oxide Diffusion Studies	3-37
Subsystem Aseptic Assembly Studies	3-44
4. STERILIZATION ACTIVITY AT ATLANTIC MISSILE RANGE	
General Requirements for Terminal Sterilization Effectiveness	4-1
Sterilization Alternatives at Atlantic Missile Range	4-4

1. INTRODUCTION

This document is Volume 1 of the final report by the Hughes Aircraft Company on the Surveyor Sterilization Program conducted under Contract 950056 for the Jet Propulsion Laboratory, California Institute of Technology. The program includes the period April 1961 through March 1963. Volume 2 contains specifications, detailed sterilization procedures, and vendor contributions to the sterilization studies. Volume 3 is a confidential document consisting of the sterilization studies on the Surveyor main retro-rocket engine.

The responsibility of Surveyor sterilization, as defined in Task 13 of the contract, includes the investigation of sterilization methods and the formulation of a detailed sterilization plan; the following items are included in this responsibility: sterilization in the spacecraft design requirements, continuous monitoring of the spacecraft design, planning and execution of material and component evaluation, establishment of adequate methods and procedures to meet the sterilization objective, and establishment of an overall sterilization operation plan to ensure the integrity of sterility and system operation.

Since the original requirement for sterilization of Surveyor was deleted from the spacecraft program, this report covers the work conducted to the time of redirection. Specifically, it presents the results of experimental and analytical studies conducted in verifying Surveyor component and material compatibility to the sterilization processes and deals with the development of adequate sterile techniques for subsystem and unit aseptic assembly where needed. This report also describes the sterilization requirements and procedures evolved for unit, subsystem, and system test and sterilization execution, and establishment of the proposed overall system sterilization operation plan.

In order to satisfy the sterilization requirements, certain individual subcontractors perform separate studies. The results of these studies are also provided in this report.

SCOPE

The aim of the sterilization effort was to achieve both an internally and externally sterile spacecraft at launch. Under the directive of Jet Propulsion Laboratory, heat sterilization by exposure to 125°C for 24 hours

was chosen as the method to be used for internal sterilization. Exposure of the completed spacecraft in a sealed shroud to 12 percent ethylene oxide - 88 percent Freon 12 gas at 30 to 50 percent relative humidity and 100°F for 11 hours was chosen for terminal (external) sterilization. In case certain vital components could not withstand heat sterilization, special techniques, including aseptic assembly with the aid of liquid sterilants, were added to the sterilization master plan in an effort to retain the philosophy of internal sterilization.

To achieve both a sterile spacecraft and one having maximum reliability required a comprehensive sterilization program involving effects of sterilants on materials and components to be used on the Surveyor, proving sterilization techniques to be used where heat sterilization cannot obtain an internally sterile subsystem, evaluating processes to be followed in heat and ethylene oxide sterilization, preparing procedures documents and handbooks, training personnel in effective sterilization techniques, preparing detailed assembly procedures that incorporate the sterilization requirements, and providing adequate facilities to conduct required tests and achieve and maintain sterility of the Surveyor spacecraft.

ESTABLISHMENT OF REQUIREMENTS

Early in the development of the Surveyor program, the need for documents to define sterilization requirements and operations was identified. The documents were to establish the requirements to minimize the possibility of error in the fabrication assembly, test, and ultimate use of the spacecraft in an economical manner through rigorous and methodical controls and test procedures. These documents would provide uniform and consistent standards for achieving sterility and controlling contamination and would permit convenient review of procedures for consistency.

Specifications

To establish sterilization requirements Detail Specification 224900, Surveyor Spacecraft, Sterilization Requirements, was initiated. This document related the parameters to produce internal sterilization by heating, external sterilization by exposure to ethylene oxide gas, and surface sterilization for mating of components by use of liquid sterilants. It also established the sterilization compatibility requirements of all spacecraft equipment. For type approval test purposes, the Environmental Requirements Specification 224810 established the sterilization test requirements and thereby all subsystems and assemblies were to be qualified by exposure to the sterilization process. Copies of these specifications are contained in Appendix A.

OPERATIONAL PLANS AND PROCEDURES

An overall sterilization plan*,** was established to reflect the operations necessary to deliver a sterile vehicle for launch. This plan itemized the assembly, test, and sterilization operations from contractor plant fabrication to terminal sterilization at the launch site. This plan was also subject to change with changes in vehicle configuration or program redirection.

To maintain control of sterilization operations within the program, it was considered important to establish the sterilization procedures document** to define the objective of each sterilization operation, the procedure to be followed for each operation, and an acceptance criterion to prove that the process performed its intended function. This document was also to describe, in summary, the checkoff list the operator was to follow and all supporting documentation to demonstrate that the items on the checkoff list were actually performed. In addition the procedures were to indicate caution where any hazard might arise.

Because of the interaction of the assembly and test operations on sterilization, a document establishing the integration of fabrication and assembly, test, and sterilization procedures was considered essential. To coordinate this effort, a committee was established with representatives of the above-mentioned areas to determine the necessary steps to assure that the sterilization requirements would be fulfilled. A preliminary set of these integrated procedures is provided in Appendix B.

Detailed System Sterilization Plan

The master sterilization plan as visualized prior to program redirection is illustrated in Figure 1. This plan incorporates the three methods of sterilization: heat, ethylene oxide-Freon 12 gas, and liquid sterilants.

The primary process, heat sterilization, was to be accomplished on the preliminary spacecraft assembly (all components except heat labile or safety hazard items) at the Hughes facility at Culver City. After heat sterilizing, the spacecraft with all subsystems installed would undergo the extensive system functional and environmental tests for complete system checkout. After system integrity was verified, those units sensitive to normal transportation environments were to be removed from the spacecraft and shipped to the Atlantic Missile Range in protective containers. These items are shown in Figure 1. Assembly of these items to the spacecraft at AMR would have then required aseptic techniques using liquid

*Surveyor Spacecraft System Report No. 2250/60, "System Test, Sterilization, and Operations Plan," 23 March 1962.

**Surveyor Spacecraft System Report No. 2250/61, "Sterilization Procedures Documents," 18 April 1962.

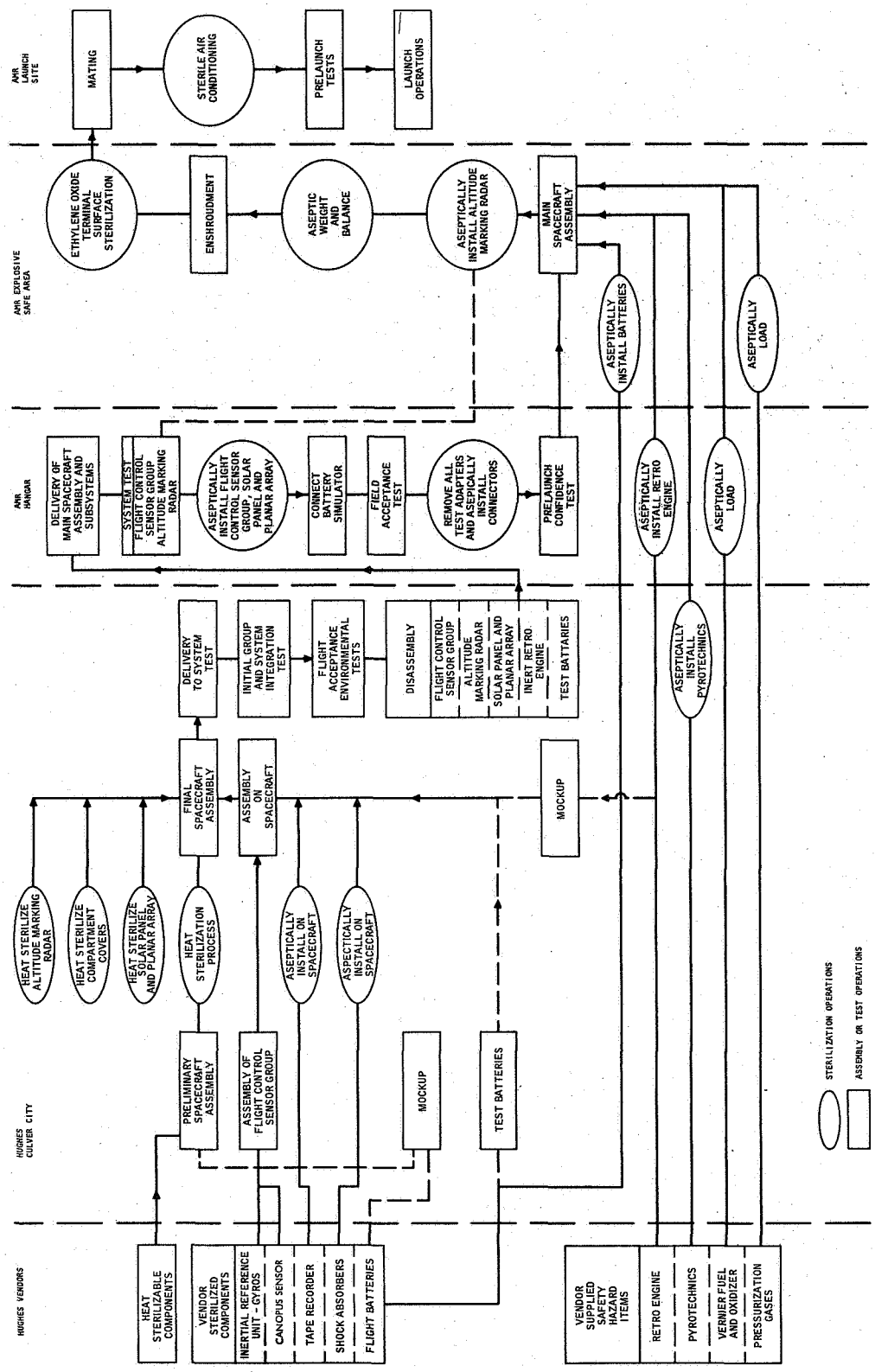

Figure 1. Detailed System Plan for Sterilization Sequence (Heat, Liquid, and Gas sterilization)

sterilants. To assure that the transportation environments were not detrimental to the spacecraft, field acceptance type tests were to be performed on the spacecraft using system test equipment. Once system integrity was verified, the system test adapters were to be removed and the equipment connectors aseptically installed. In the explosive safe area at AMR the safety hazard items, i. e., pyrotechnics, retro-rocket engine and vernier engine fuel, oxidizer, and gases were to be aseptically installed, fueled, and pressurized respectively. Enshroudment of the spacecraft would then take place using the missile clamshell type nose cone. The final ethylene oxide gas terminal surface sterilization process was then to be performed using the mobile sterilization unit.

Detailed Subsystem Sterilization Plans

Through indications from early component compatibility results, complete assemblage of the spacecraft (composed of 20, 000 components) and heat sterilization were not consistent with the state of the art. Hence the master sterilization plan was to include certain subsystem aseptic assembly steps before the subsystems could be integrated to the spacecraft. A more complete coverage on the work conducted on the subsystem level is presented in "Subsystem Aseptic Assembly Studies" in Section 3, and details for the subsystem sterilization procedures are presented in Appendix C. The subsystems that require sterilization processes include: the flight control sensor group (including a separate process for the inertial reference unit), tape recorder (original program), TV cameras, batteries, and shock absorber columns.

TEST PLANS AND PROCEDURES

Sterilization Specification 224900 defines the system test requirements for proving the design adequacy of Surveyor equipment and establishes the general test plan for implementation. All activities supplying units or subsystems had the responsibility of incorporating the sterilization requirements, devising and conducting tests to verify the integrity of the unit and subsystem design.

Unit and Subsystem Type Approval Tests

The type approval tests were devised to verify the integrity of the subsystem and assembly design to the sterilization environments, and a sample of each type of assembly in the Surveyor system was to be subjected to these tests. Because of the nature of the tests, the test parameters were to be extended in duration and severity to assure satisfactory operation in the actual environment. On the basis of these tests assembly designs were to be accepted or rejected.

Since sterilization requirements proposed new environments unusual to the environmental test laboratory, a new piece of equipment was under negotiation for purchase which would allow type approval testing of subsystems and assemblies and provide accessibility to sterilely assemble

spacecraft components. The equipment resembles a glove box with automatic gas generating and purging units with the associated valves, gauges, and flow meters to provide a complete facility. The general design criteria are outlined in the Procurement Specification 224901 in Appendix A.

System Type Approval Test

To verify system integrity after exposure to the sterilization environments, type approval tests for heat and ethylene oxide gas sterilization were devised using the T21 prototype test vehicle.

T21 System Heat Sterilization Type Approval Test

This test was designed to establish adequate procedures for rendering the flight spacecraft internally sterile and to verify the ability of the spacecraft to perform its intended function satisfactorily when heat sterilized. The configuration of the T-21 spacecraft for these tests was to be identical to that planned for flight spacecraft. The temperature stabilization time and temperature fluctuations of the test oven would be ascertained through the test run. Subsequently, thermocouples would be strategically placed at various points in and on the spacecraft; similarly, encapsulated spore samples would be installed within the spacecraft. After being placed in the oven, the spacecraft would be monitored continuously during the heat sterilization process to determine the stabilization time of all equipment to reach 257° F. After all equipment had been exposed to 257° F for 24 hours, the spacecraft would be allowed to cool to room temperature. The encapsulated spores samples would be removed and tested for viability to determine the effectiveness of the sterilization process. The system would not be operated during sterilization but would be given a short confidence checkout at the conclusion of this first 36-hour cycle and at the end of the test (72 hours). Results of thermal tests would include mean temperatures at all thermocouple points, viability results at all spore sample points, time required for each piece of equipment to reach the stabilized temperature level, mean temperature, average deviation from mean temperature, and time required to reach room temperature.

The type approval test procedure is described in Appendix C, and specifies the equipment to be used to conduct the test and also the data to be obtained.

The acceptance criteria for passing the test would be the demonstration through data analysis that the spacecraft had reached equilibrium temperature and was exposed to the heat cycle for the proper period of time. Also the spacecraft systems would have to demonstrate satisfactory operation by a system functional test verification. Lastly, the spore samples distributed throughout the test would have to indicate negative viability.

T21 System Ethylene Oxide Gas Sterilization Type Approval Test

This test was established to verify the ability of the entire spacecraft to perform its intended function satisfactorily when exposed to the ethylene oxide gas sterilization process. It would also be used to establish an adequate procedure for the ethylene oxide process. Since the operation was dependent upon the proper functioning of the mobile sterilization unit, adequate checkout of this unit was a criterion of the test. Competent operation of the mobile sterilization unit was considered an important phase of the test plan. In the development of adequate procedures, separate tests were to be run utilizing the mobile sterilization unit and an empty missile shroud installed with spore samples to evaluate the important parameters of time to full concentration, time to kill, and time to flush. Using this information as a base, a similar test would be repeated with the completely assembled spacecraft and spore samples installed within the spacecraft as well as in the shroud. At full concentration, the gas would be periodically sampled and analyzed (and replenished if necessary) during the full exposure cycle for sterilization. The equipment that would be operating in the shroud prior to launch would be operating during this gas sterilization test. In addition to a bacteriological evaluation, a complete system functional checkout would follow the test. Appendix C provides procedures to be followed and equipment to be used for conducting the gas sterilization type approval test.

RELIABILITY

A set of preliminary quantitative reliability objectives were established for the spacecraft system, equipment groups, and subassemblies. For this purpose, reliability is defined as the probability that the equipment will function within specified performance limits under the operational environments expected and for the length of time required. The environments anticipated included those of the sterilization processes. To predict a probability of successful system operation after sterilization led to an evaluation comparing the operating failure rate versus sterilization failure rate of a sample semiconductor system.

Effect of Heat Sterilization

For purposes of comparison a space system of 20,000 semiconductor parts was utilized to illustrate the effect of heat sterilization on reliability. The following assumptions were made:

1) Average failure rate in operation over intended mission time and environments --- 0.5 percent/1000 hours.

2) Average fail rate in nonoperating condition 0.01 by operating fail rate --- 0.01 by 0.05 = 0.0005 percent/1000 hours. (Refer to Surveyor fail-rate data sheet).

3) Heat sterilization fail rate five times as great as nonoperating storage --- 0.05 by 0.05 = 0.0025 percent/1000 hours.

4) All components have been designed to withstand heat sterilization environment and have passed type approval tests.

5) Failed components are replaced during the course of testing.

6) Exponential fail-rate conditions exist.

Figure 2 shows the reliability curves derived from the above assumptions. The effect of heat sterilization is minimal. The percent of surviving components is shown (not to be confused with system reliability because redundancy has not been accounted for). At the end of 24 hours of heat sterilization 98.8 percent of the parts would survive, and on the average of 1.2 percent of the semiconductors could be expected to be replaced. Note that these are estimates; more accurate failure rates due to sterilization would have been established only when actual test data were available.

The time profile shown at the bottom of Figure 2 illustrates the effect of instantaneous reliability. That is after a system is tested, say for 15 hours, at the factory (point A). Some component failures will be expected. When all these are repaired, the instantaneous number of survivors or good components becomes 1. The first tests up to point A may be considered preliminary subsystem tests. Assuming the final flight acceptance test takes the hours from 15 to 40, additional failures can be expected to a greater extent due to the increase in time. As replacements are made, the instantaneous number of survivors becomes 1 at point B. At this point it might be well to remember that the systems test should be designed to exercise all components particularly those in redundant portions of the system. If this is not done a final acceptance might be indicated because of redundancy, however, failure to detect the failed portion of the redundant system will give a false indication of inherent flight reliability.

Next a heat sterilization may be applied prior to shipment to the Atlantic Missile Range. It will be noted that the degradation is small. This is from point B to C. The time from C to D is final preflight and D to E flight mission. Again, the exact effect on reliability cannot be known until test data could be provided. Some cost effect can also be anticipated i.e., the cost to replace components that may have failed.

Instantaneous Failure Rate Curve

The curves presented in Figure 3 present a time profile that may be expected of a space vehicle system. Note that the average failure rate is composed of the effects of a variety of sources of environments, each of which produces a different effect. The purpose of type approval tests, qualification tests, etc. is to assure that the anticipated environments will not have a detrimental effect when the space vehicle is used for its intended

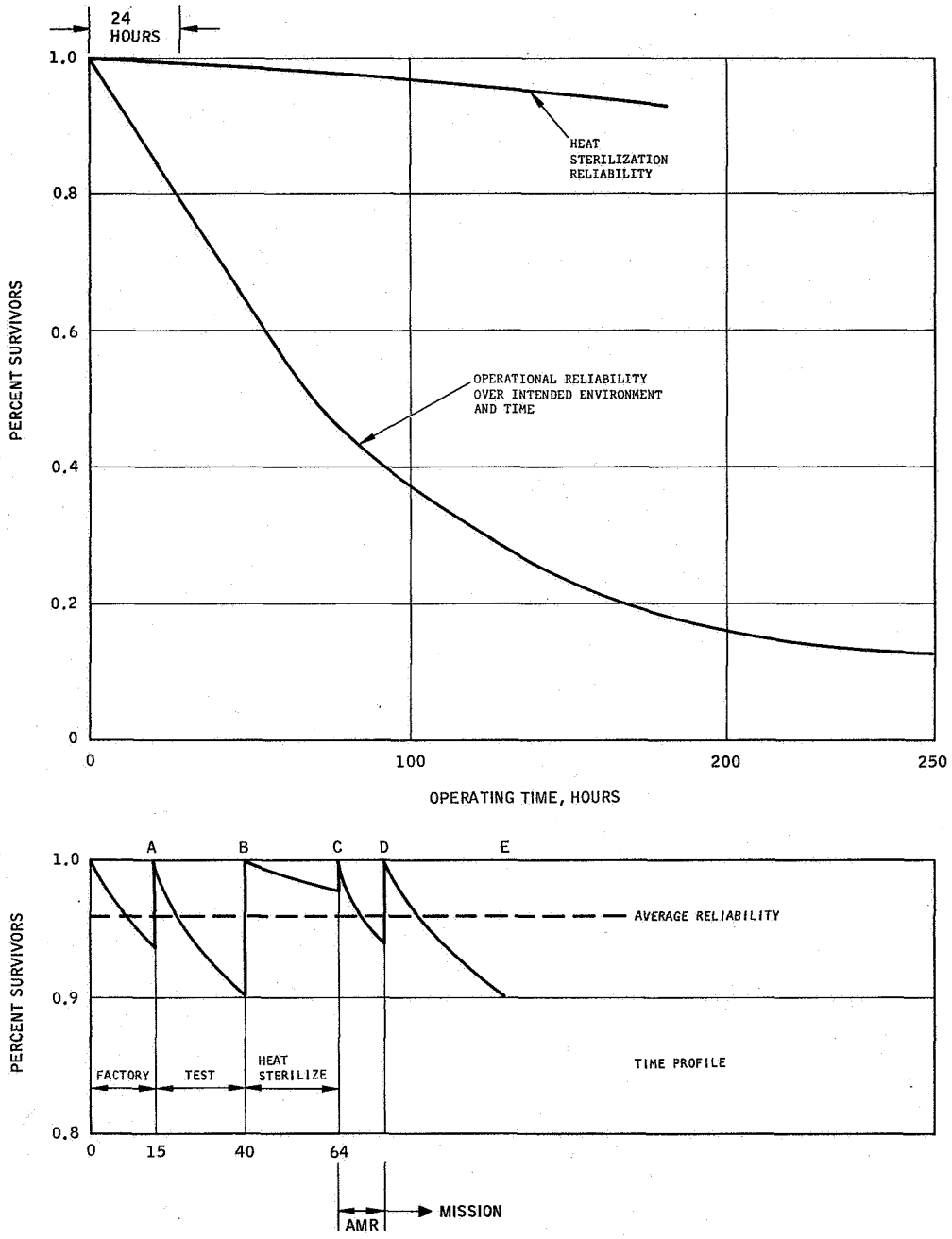

Figure 2. Reliability Curves of Semiconductor System Containing 20,000 Parts (Series)

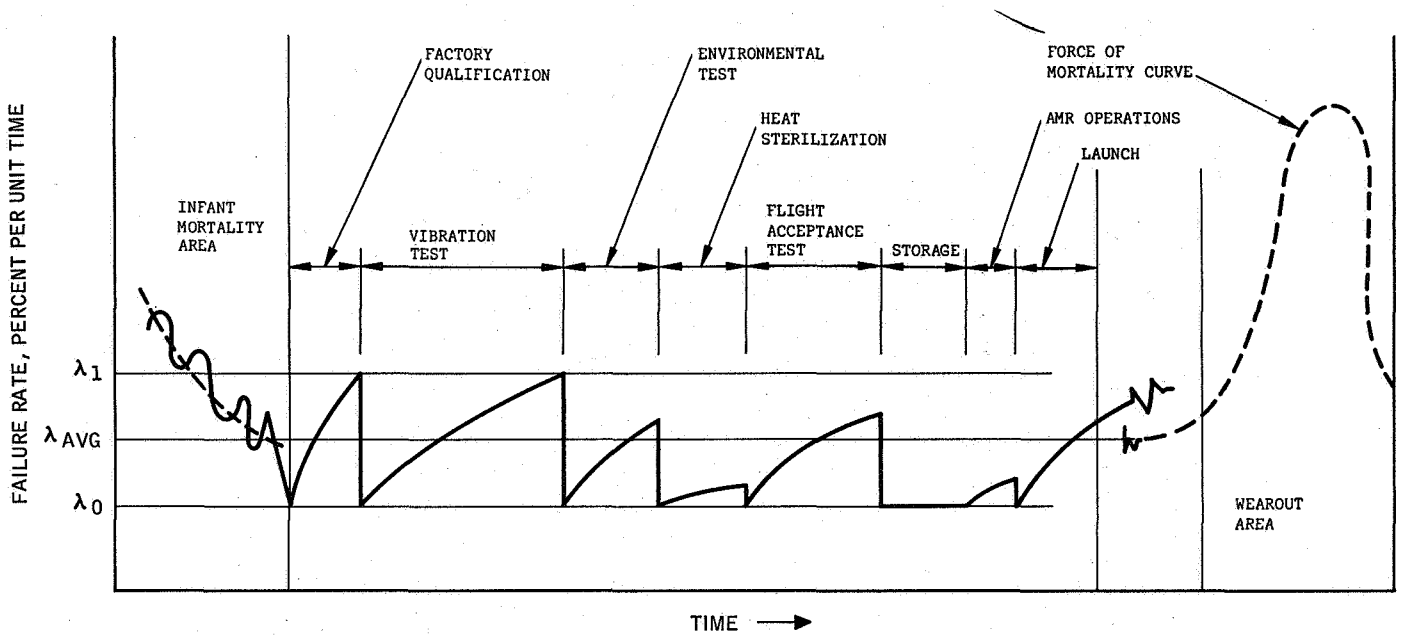

ASSUMPTIONS:

1) ALL TYPE APPROVAL TESTS PASSED.
2) ACCEPTANCE AFTER DEBUGGING HAS OCCURRED.
3) AFTER FAILURES, REPAIRS ARE MADE.
4) EQUIPMENT WILL NOT BE OPERATED BEYOND WEAROUT.

$\lambda = \frac{1}{MTBF}$

Figure 3. Curve of Instantaneous Failure Rate

mission under the specified time and environments. The curve is exaggerated for illustrative purposes. However, if for example a vibration condition in use was encountered that lasted considerably longer than designed for, an aggravated failure rate would occur. In any case some fail rate for this condition exists. One strong reason for safety factors and derating is to assure that the average fail rate will not be degraded, shown by the curve; also, the average fail rate is a figure which accounts for the sum total of a variety of effects. Each time the system is repaired the instantaneous fail rate becomes zero. The small anticipated effect of heat sterilization is shown for illustrative purposes. λ_1 is the calculated system failure rate based on design reviews, data analysis, etc. and is the critical fail rate based on time to first catastrophic failure.

Factors Affecting System Performance

The exact effect of heat sterilization is not known. Through tests the effect on average failure rate would have been calculated. Another factor that cannot be accurately evaluated is the effect of less handling. However, this would serve to enhance reliability since it lessens inherent damage that may occur which is difficult to detect. Another factor to

consider is that many components selected are of the Mil Std types capable of withstanding 257 °F in an operating condition; also that on structural parts a much higher temperature design is necessary to withstand the lunar environment. As a result the effects of heat sterilization on reliability appear to be less than other environments and operating conditions.

Heat sterilization, of the main spacecraft assembly however, results in acceleration of storage random part failure rates giving a predictable average of 17 failed parts for each 24-hour exposure. Time needed for maintenance action will materially increase schedule risk (defined as the probability of accomplishing system sequences without launch delays), as well as complicate the procedures to include aseptic techniques of making repairs.

In evaluating the effects of ethylene oxide gas and liquid sterilant application process, it is assumed that the procedures of application have been tested and verified to be adequate, and in addition that the final choice of liquid sterilant has also been tested and verified to be effective.

With the limited amount of test data available and with the assumptions made it can only be stated that any added sterilization process does not contribute to reliability improvement, but affords additional opportunity for failure by handling. The failure modes which include erosion of insulators, erosion of metal surfaces, and film deposits causing poor contact are associated with time delay, thus discovery of failure cannot be completely assured by final tests. As a result failure attributed to liquid sterilant applications can be associated with types of failures occurring due to humidity, incomplete rinses from plating or other chemical processes, and chemical reactions resulting from incomplete cleaning or drying. Hence there will be a realiability degradation. This degradation may be partially interpreted in the increase in the probability of launching a spacecraft containing marginal or failed components.

2. STERILANT COMPATIBILITY STUDIES OF SURVEYOR COMPONENTS AND MATERIALS

The determination of compatibility of materials and components with sterilants and sterilization processes consisted of two phases: literature search and experimental evaluation. To save valuable testing time, pertinent information describing the effects of the sterilants on materials and components considered for use on the Surveyor was secured from the literature. Those materials and components not definitely established as compatible were considered for testing. Only in a few cases were published results rechecked experimentally.

LITERATURE SEARCH

The heat resistance of many materials and components was readily obtainable from the literature. However, data showing the effects of exposure of materials and components to ethylene oxide-Freon 12 gas mixture and formaldehyde-methanol liquid sterilant were very limited. Information on ethylene oxide gas sterilization dealt primarily with food and medical supplies. Much of the data related to sterilization with "Carboxide"--a 10 percent ethylene oxide-90 percent carbon dioxide mixture. Very little of the literature reported ethylene oxide-Freon 12 compatibility. Some of the reports also dealt with the compatibility of materials with pure ethylene oxide. Although much of this information was not specifically applicable to Surveyor materials and components, all the references were included in the report of the literature survey to complete the bibliography in this field.

The formaldehyde-methanol solution evaluated for this program was developed by Dynamic Science Corporation and all data on this sterilant were obtained from this organization. Data on formaldehyde-water compatibility was also obtained from this source.*

---

*Opfell, J. B., "Surveyor Sterilization Handbook and Other Documents," Dynamic Science Corp., 28 August 1962, Contract No. 4-681981-FF36-6

Opfell, J. B., Miller, C. E.; Hammons, P. N., Final Report #R-6-P-32, "Evaluation of Liquid Sterilants," Dynamic Science Corp. for JPL Contract NI-143452

Heat Resistance of Materials and Components

The resistance of a number of materials and components to exposure to 125° C is given in Table 1. The data is abridged to reflect the decision of initially selecting heat resistant materials and components for Surveyor usage, thus materials which are known to melt below the sterilization temperature are not included. Because of the magnitude of data on this subject the table is necessarily limited to the types of materials and components specifically considered for Surveyor usage.

All metals were found to have adequate heat resistance at 125°C. However, 7075-T6 aluminum loses 5 percent of its tensile strength after 100 hours at 135 C (Reference 7). This loss can be significant if a lightweight structure possessing high strength characteristics is needed.

Among plastics, mylar, teflon, nylon and some irradiated polyethylenes were reported sufficiently resistant to 125° C providing loads did not reach 264 psi (Reference 14). The suitability of polyurethane and epoxy syntactic foams is apparently dependent upon the selection of material (Reference 11). Nopco's Lockfoam A210 and Emerson and Cuming's Stycast 1090, for example, are reportedly resistant to 125° C.

Many elastomers are resistant to 125° C, and their resistance improves if they are heated in a nitrogen atmosphere. It has been reported that neoprene undergoes a 13 percent decrease in tensile strength when heated at 125° C for 50 hours in air (Reference 8).

Most capacitors, resistors, and connectors selected for Surveyor have been rated by the manufacturer at above 125° C, so probably have a high degree of reliability after being heated at that temperature. Silicon semiconductors have operating temperatures up to 180°C and are therefore compatible with heat sterilization. On the other hand, germanium semiconductors are degraded by high temperatures (Reference 18).

References for Heat Resistance of Materials and Components

1. JPL Preferred Parts Lists, Jet Propulsion Laboratory, Pasadena, Calif. 7th ed., 8 Nov. 1960

2. Preferred and Proposed Component Parts for Surveyor, Hughes Aircraft Co., 27 June 1961

3. Correspondence with Electric Storage Battery Co., 18 Aug. 1961

4. Communication with Kearfott Corporation

5. Hughes Material Specifications

TABLE 1. LITERATURE REVIEW OF THE HEAT RESISTANCE OF MATERIALS AND COMPONENTS

Material	Resistance to 125 °C(257° F) for 48 Hours	Remarks
Metals, Treated and Untreated		
All steels	Good	
Iron	Good	May rust in a humid atmosphere
Copper	Good	Will tarnish
Bronze	Good	
Brass	Good	
Aluminum	Good	7075-T6 undergoes 5 percent loss in tensile strength after 100 hours at 135° C(275° F)
Titanium	Good	
Gold	Good	
Platinum	Good	
Tantalum	Good	
Silver	Good	
Nickel	Good	
Magnesium	Good	
Anodized aluminum	Good	
Tin solder	Good	
Lead solder	Good	
Silver solder	Good	
Molybdenium disulfide dry film lubricant on Al	Good	
Plastics and Resins		
Mylar	Good	Yellows upon exposure in air; m. p. 250-255° C
Teflon	Good	Continuous heat resistance to 260° C (500 °F); heat distortion point at 66 psi~ 121° C(250 °F)

TABLE 1. (Continued)

Material	Resistance to 125° C(257° F) for 48 Hours	Remarks
Irradiated polyethylene	Probably good	Temperature resistance depends on quality of material and loading conditions; heat distortion point 121-130 °C (250-265° F)
Nylon	Good	Heat distortion point 149° C(300 °F)
Rigid polyurethane foams	Questionable	Most have continuous heat resistance at 121° C, questionable at 125° C; suitability for this application dependent upon specific material considered.
HMS*16-1085 epoxy glass circuit breadboard	Good	
HMS16-1026 paper base phenolic circuit board resin	Probably good	
HP**16-66 epoxy polyanide coating	Good	
Kel-F	Good	
MIL-P-997 silicone fiberglass	Good	Recommended to 400 °F.
Epoxy syntatic foams	Possibly good	Dependent upon selection of material
Epoxy resins, amine, and anhydride cured	Good	
<u>Adhesives</u>		
Epoxylite 5302 (HP 16-74)	Good	
FM1000 (HP16-80)	Questionable	Recommended to 200° F; may be useful in some applications after heating at 257° F, if no load is applied during heating

*Hughes Material Specification
**Hughes Process Specification

TABLE 1. (Continued)

Material	Resistance to 125°C(257°F) for 48 Hours	Remarks
Epibond 104 catalized with HN-927 (HP16-41)	Good	Recommended to 300°F
RTV731 (HP16-48)	Good	Continuous heat resistance to 400°F
Rubbers and elastomers		
Buna N	Good	
Viton A	Good	
Neoprene	Good	
AMS-3302 silicone rubber	Good	
LS-55 fluorosilicone	Good	
RTV 881 silicone, Dow Corning Corp.	Good	
Silastic 675, Dow Corning Corp.	Good	Recommended to 500°F
Lubricants		
DC4 silicone grease	Good	
MIL-G-3278 grease	Good	
Petroleum based lubricants	Possibly good	Dependent upon selection of material
Fluorinated hydrocarbons	Possibly good	Dependent upon selection of material
Component		
Capacitors		
Mica, 2-10,000 micromicrofarads	Probably good	Known to withstand this temperature; reliability not established
Paper, 0.0012-1 microfarad	Probably good	Known to withstand this temperature; reliability not established

TABLE 1. (Continued)

Component	Resistance to 125°F(257°F) for 48 Hours	Remarks
Paper, mylar, metallized, 0.047-18 microfarads	Probably good	Known to withstand this temperature; reliability not established
Tantalum, solid, 0.0047-330 microfarads	Probably good	Known to withstand this temperature; reliability not established
Tantalum, liquid	Probably good	Known to withstand this temperature; reliability not established
Ceramic, low voltage, 47-10,000 microfarads	Probably good	Known to withstand this temperature; reliability not established
Glass, 5-10 micromicro-farads	Probably good	Known to withstand this temperature; reliability not established
Tantalum, liquid foil, 0.1-3,500 micromicrofarads	Probably good	Known to withstand this temperature; reliability not established
Tantalum, solid, nonpolar, 0.0047-165 microfarads	Probably good	Known to withstand this temperature; reliability not established
Resistors, Fixed		
Carbon composition, 1000 ohms -22,000 ohms	Probably good	High temperature can result in permanent increase in resistance values
Carbon film, 100,000 ohms maximum	Good	Operating temperature > 125°C
Metal film, 1000 ohms -10,000 ohms	Good	Operating temperature > 125°C
Wirewound, power, 550 ohms -175,000 ohms	Good	Operating temperature > 125°C
Metal film, to 100,000 ohms	Good	Operating temperature > 125°C
Transistors		
Silicon, NPN and PNP	Good	Operating temperature reaches 180°C
Germanium	Poor	

TABLE 1. (Continued)

Component	Resistance to 125°F(257°F) for 48 Hours	Remarks
Diodes		
Backward, silicon, glass case	Good	
Fast switching, silicon, glass case	Good	
General purpose, silicon, glass case	Good	
Tunnel, silicon, metal case	Good	
Zener regulator, silicon, glass case	Good	
Connectors		
Miniature power quick disconnect	Probably good	257°F maximum rating for neoprene inserts; with silicone inserts good to 400°F. Diallyl phthalate inserts rated to 450°F.
Printed circuit, glass fiber dithiallate	Good	450°F - 500°F rating
Rack and panel, glass fiber dithiallate	Good	450°F - 500°F rating
Miscellaneous		
Cadmium sulfide cells	Good	
Silver-zinc rechargable battery	Fails	
Silicon solar cell	Good	
235150 (Hughes Aircraft Co.) integrating rate gyro, Kearfott Corp.	Possibly good	Can withstand 125°C but must be re-calibrated after exposure.

6. Hughes Process Specifications

7. MIL-HDBK5, "Strength of Aircraft Elements"

8. Catton, Neil L., The Neoprenes, Rubber Chemical Division, E.I. DuPont de Nemours and Co., Inc., Wilmington, Delaware, 1953

9. Feuchtbaum, R.B., Bahun, C.J., Rust, J.B., "Development of Improved Thermal Shock Resistant Dielectric Materials for Embedding Electronic Components" Final Report NObs-84027, TM-688, 1 June 1961

10. Dow Corning Corporation data sheets

11. Emerson and Cuming Corporation data sheets

12. Minnesota Mining & Manufacturing Corp. data sheets

13. Dow Chemical Corporation data sheets

14. Modern Plastics Encyclopedia, Plastic Catalogue Corp., N.Y., 1961

15. The VanderbiltRubber Handbook, G.C. Winspear, ed., R.T. Vanderbilt Co., Inc., New York, 1958

16. RCA Semiconductor Products Handbook, Radio Corporation of America, Semiconductor and Materials Division, Somerville, N.J., 1959

17. Spangenberg, Karl Ralph, Fundamentals of Electron Devices, N.Y., McGraw-Hill, 1957

18. Bridgers, Scaff and Shive, Transistor Technology, D. Van Nostrand Co., Inc. New York, 1958

Compatibility of Materials and Components with Ethylene Oxide

Compatibility data for materials and components with pure ethylene oxide, carboxide, and 12 percent ethylene oxide-88% Freon 12 are tabulated together in Table 2 for comparison, with appropriate notations.

A number of metals were designated incompatible with ethylene oxide in some literature sources because of their action on acetylene, a contaminant of some diluent gasses, which can react explosively in the presence of these metals (acetylating agents)., See References 7, 14, and 16 following Table 2. Some investigators also found evidence of polymerization of ethylene oxide in the presence of these metals when moisture

TABLE 2. COMPATIBILITY OF ENGINEERING MATERIALS AND COMPONENTS WITH ETHYLENE OXIDE

Material	I Compatibility With Ethylene Oxide	II Compatibility With 12% Ethylene Oxide-88% Freon 12	III Compatibility With Carboxide (10% Ethylene Oxide-90% Carbon Dioxide)	Remarks*		References I	References II	References III
Metals, Treated and Untreated				Corrosion Rate				
Mild steel	+	+	+	<2 mil/yr at 75°F (I)	Should be free of rust	6,7	8	
Cast iron	+	+	+	<20 mil/yr at 75°F (I)	Should be free of rust	6,7	8	
Tin	+	+	+			6		
12-Cr steel	+	+	+	<20 mil/yr at 250°F (I)		6	8	
17-Cr steel	+	+	+	<20 mil/yr at 250°F (I)		6	8	
18-8 stainless steel	+	+	+	<20 mil/yr at 250°F (I)		6,7	8	
316 stainless steel	+	+	+	<20 mil/yr at 250°F (I)		6,7	8	
Durimet 20	+	+	+	<20 mil/yr at 250°F (I)		6		
Worthite	+	+	+	<20 mil/yr at 250°F (I)		6		
Si-iron	+	+	+	<20 mil/yr at 75°F (I)		6		
Copper	Questionable			>50 mil/yr at 75°F (I)	Can catalyze polymerization of ethylene oxide if moisture is present; can cause explosive reaction if acetylene is present (I)	6,7,12,16		
Sn-bronze	Questionable			>50 mil/yr at 75°F (I)	Same as above	6,7,16		
Al-bronze	Questionable			>50 mil/yr at 75°F (I)	Same as above	6,7,16		
Red brass	Questionable	+		>50 mil/yr at 75°F (I)	Same as above	6,7,16	8	
Yellow brass	Questionable	+		>50 mil/yr at 75°F (I)	Same as above	6,7,16	8	
Si-bronze	Questionable			>50 mil/yr at 75°F (I)	Same as above	6		
Monel	+	+	+	<20 mil/yr at 75°F (I)		6		
Nickel	+	+	+	20 mil/yr at 75°F (I)		6		
Inconel	+	+	+	<20 mil/yr at 75°F (I)		6		
Hastelloy B	+	+	+	<2 mil/yr at 75°F (I)		6		
Hastelloy C	+	+	+	<2 mil/yr at 75°F (I)		6		
Hastelloy D	+	+	+	<2 mil/yr at 75°F (I)		6		
Aluminum	+	+	+	<2 mil/yr at 75°F (I)		6,7	8	
Lead	+	+	+	<20 mil/yr at 75°F (I)		6		
Titanium	+	+	+	<2 mil/yr at 75°F		6		
Zirconium	+	+	+	<2 mil/yr at 75°F		6		
Gold	+	+	+	<2 mil/yr at 75°F		6		
Platinum	+	+	+	<2 mil/yr at 75°F	Not compatible with hot platinum coil (I)	6,15		
Tantalum	+	+	+	<2 mil/yr at 75°F		6		
Silver	Questionable			<2 mil/yr at 75°F	Can catalyze polymerization of ethylene oxide if moisture is present (I)	6,7		
Magnesium alloys	Questionable				same as above	6,7		
Nitrite coated steel	+					6		
Phosphate coated steel	-					6		
Anodized aluminum	-				Polymerizes ethylene oxide (I)	6		
Dimetcote No. 3	-				same as above	6		
Sauereisen silicate coating	-				same as above	6		
Mercury alloys	Questionable				Can cause explosive reaction if acetylene is present (I)	16		

*Remarks are annotated I, II, and III to indicate which compatibility column they refer to.

NOTE: + = Compatible
- = Not compatible

TABLE 2. (Continued)

Material	I Compatibility With Ethylene Oxide	II Compatibility With 12% Ethylene Oxide-88% Freon 12	III Compatibility With Carboxide (10% Ethylene Oxide-90% Carbon Dioxide)	Remarks*	References I	References II	References III
Plastics and Resins							
Polyvinyl chloride	+	+	+		7	8, 18	
Saran	+	+	+		6	8	
Teflon	+	+	+		6,7	8,9,18	
Polystyrene	+	Limited +	+	crazed after prolonged exposure (II)		5,8,9	
Polyethylene	+	+	+	little attack (I)	6	8,9	10
Polymethyl methacrylate	-	Limited +	+	crazed after prolonged exposure (II)	6	5,8,9	
Tygon		+	+			8,9,18	10
Kel-F	+	+	+	swells (I)	7		
Nylon	+	+	+		6,7		
Polyvinyl butyral	+	+	+		7		
Cellulose acetate		+	+			10	10
Fluorothane	+				6		
Polybutyl methacrylate	-				6		
Cellulose	-				15		
Polyvinyl alcohol	-				12		
Vinyl, type R-1	+				17		
Rubbers and Elastomers							
Neoprene	+	+	+	attacked by ethylene oxide after prolonged exposure (I)	7	8,9	
Hycar		+	+			8,9	
Buna N	+	+	+		7		
Natural rubber	Some formulations +				6,17		
GRS rubber	+				17		

*Remarks are annotated I, II, and III to indicate which compatibility column they refer to.

NOTE: + = Compatible
- = Not compatible

TABLE 2. (Continued)

Material	I Compatibility With Ethylene Oxide	II Compatibility With 12% Ethylene Oxide-88% Freon 12	III Compatibility With Carboxide (10% Ethylene Oxide-90% Carbon Dioxide)	Remarks*	References I	 II	 III
Non-Elastomeric Packing							
Pyroid style 650	Questionable			9 percent weight loss (I)	6		
Pyroid 10,000	Questionable			2 percent weight loss (I)	6		
Teflon impregnated asbestos, white	-			52 percent volume gain (I)	6		
Teflon impregnated asbestos, black	Questionable			19 percent weight gain (I)	6		
Lubricants							
Fluorinated hydrocarbons	+	+	+		7	8,9	
Silicone grease, thin film	Limited +	+	+	Residue formation after prolonged exposure (I)	8	9	
Petroleum based lubricants	-				15		
Miscellaneous							
Glass	+	+	+		6,13		
Stoneware	+	+	+		6,13		
Asbestos	+	+	+		6,13		
Graphite	+	+	+		6,13		
Concrete	+	+	+		6,13, 14		
Garlock # 7021 and # 734	+	+	+		6,13		
Teflon impregnated string	Questionable			21 percent weight gain (I)	6		
Calcium silicate insulation	+				13		
Magnesia insulators	-				12		
Black foamed glass	-				12		

*Remarks are annotated I, II, and III to indicate which compatibility column they refer to.

NOTE: + = Compatible
- = Not compatible

TABLE 2. (Continued)

Components	II Compatibility 12 Percent Ethylene Oxide-88 Percent Freon 12	Remarks*	References I	References II	References III
Transistors					
Raytheon 2N417	+			19	
Texas Ins. 2N 332	+			19	
Raytheon 2N327	+			19	
ST-401	+			19	
Delco 2N 173	+	Slight decrease in beta after exposure		19	
Delco 2N 278	+	Slight decrease in beta after exposure		19	
Resistors					
Carbon, size 330	+			20	
390	+			20	
3300	+			20	
13K	+			20	
15K	+	No change in resistance or surface conductivity after exposure		20	
150K	+			20	
1M	+			20	
Wirewound, size 0.5M	+			20	
1750	+			20	
Capacitors					
Electrolytic, size 4 MFD	+			20	
10 MFD	+			20	
Mica size 0.0001 MFD	+			20	
0.00026 MFD	+			20	
0.004 MFD	+	No change in capacitance or surface conductivity after exposure		20	
Paper, size 1.0 MFD	+			20	
0.5 MFD	+			20	
0.005 MFD	+			20	
0.004 MFD	+			20	
0.001 MFD	+			20	
0.03 MFD	+			20	
Oscillograph, Dumont Model 304-H	+	No change after exposure in voltage at input signal frequencies from 50-15000 cycles/second		20	

*Remarks are annotated I, II, and III to indicate which compatibility column they refer to.

NOTE: + = Compatible
- = Not compatible

was also present (Reference 6). Other investigators designated some of these metals compatible with ethylene oxide (References 8 and 11). Because the incompatibility of these metals was apparently due to the presence of other substances besides ethylene oxide, their compatibility with ethylene oxide was designated as "questionable" in Table 2 with appropriate annotations. Metals such as mild steel, stainless steel, nickel, and pure aluminum were reported excellent for extended contact with liquid ethylene oxide. Anodized aluminum was found to polymerize liquid ethylene oxide (Reference 6).

Most plastics and resins have been reported compatible with ethylene oxide gas mixtures, although liquid ethylene oxide attacks many plastics such as methacrylates and polyvinyl alcohol (References 6 and 12). Teflon, fluorothene, and polyethylene offer the most resistance to the liquid and gas mixtures.

Some rubbers were found compatible with liquid ethylene oxide for short durations but attacked by the liquid after long exposures (Reference 7). Neoprene and buna N were reported most resistant to the liquid.

Among lubricants, fluorinated compounds are most compatible with ethylene oxide. Silicones in thin films are compatible for limited exposures whereas petroleum-based lubricants are readily attacked by the sterilant (Reference 2).

Specific literature references on component-sterilant compatibility were extremely limited, the bulk of the information being produced by studies conducted at Fort Detrick, Md. Investigators reported practically no changes in appearance or electrical characteristics of components due to sterilant exposure (References 19 and 20). Two transistors showed slight decreases in beta (current gains); resistors and capacitors demonstrated no change in values.

References to Table 2 on Literature Survey of Compatibility of Material and Components to Ethylene Oxide.

1. Phillips, Charles, R., "Gaseous Sterilization," Becton, Dickinson, Lectures on Sterilization, Seton Hall College of Medicine and Dentistry, 1958.

2. Handbook of Toxicology, Vol. III, Insecticides, A Compendium, The Committee on the Handbook of Biological Data, Division of Biology and Agriculture, National Academy of Sciences, National Research Council, WADC TR 55-16, June 1959.

3. Elderfield, Robert C., Heterocyclic Compounds, Vol. I, John Wiley and Sons, Inc., N.Y., 1950.

4. Perkins, John J., Principles and Methods of Sterilization, Charles C. Thomas, Springfield, Ill., 1956.

5. Dupont "Freon" Technical Bulletin B-2, E.I. duPont de Nemours and Co., Wilmington, Del., 1957.

6. Letter from Earl L. White, Battelle Memorial Institute to V.K. Entrekin, Hughes Aircraft Co., October 12, 1961.

7. Liquid Propellant Safety Manual, The Bureau of Ordnance, Dept. of the Navy, Washington 25, D.C., October 1958.

8. Letter from Pensylvania Engineering Co. to V.K. Entrekin, October 20, 1961.

9. Haenni, Edward O., et al. "New Nonflammable Formulations for Sterilizing Sensitive Materials," Industrial and Engineering Chemistry, 51 No. 5, pp. 685-688, May 1959.

10. Lloyd, R.S. and Thompson, E.L., Gaseous Sterilization with Ethylene Oxide, American Sterilizer Co., Erie, Pa., 1958.

11. Letter from Dr. G.B. Elder, Union Carbide Co., Charleston, W.Va. to V.K. Entrekin, October 24, 1961.

12. Union Carbide Technical Bulletin F-6950, "Ethylene Oxide," Union Carbide, N.Y., N.Y.

13. Letter from Jefferson Chemical Co., 1961, and Jefferson Chemical Co., Technical Bulletin on Ethylene Oxide, 1956.

14. Wyandotte Chemical Corp., "Ethylene Oxide," Technical Data Sheet.

15. "Handling Ethylene Oxide," Technical Manual, Wyandotte Chemical Corp., Wyandotte, Mich.

16. "Ethylene Oxide," Chemical Safety Data Sheet, SD-38, MCA, Inc.

17. The Handling and Storage of Liquid Propellants, Office of the Director of Defense Research Engineering, Washington 25, D.C., March 1961.

18. Letter from Paul Sanders, E.I. duPont de Nemours and Co. to S.R. Nusbaum, Pennsylvania Engineering Co., October 19, 1961.

19. Hoffman, Robert K., Decker, Herbert M., and Phillips, Charles R., "A Technique for the Investigation of Bacterial Contamination Inside Electronic Components," Protection Branch Report of Test No. 7-60, Physical Defense Div., Ft. Detrick, Md., March 1960.

20. Carson, John K., "Tests for Effects of Freoxide on Electronic Apparatus," Engineering Section, Safety Division, Ft. Detrick, Md., August 15, 1960.

Bibliography on Ethylene Oxide, Its Chemistry and Its Use in Sterilization

This bibliography covers information available on ethylene oxide and its sterilant mixtures. For the sake of simplicity it has been divided into three categories: 1) reports dealing with chemical and physical properties, and analytical methods for determining ethylene oxide and Freon 12; 2) references on sterilization by ethylene oxide, including reports on methods and equipment, sterilization of food and medical supplies, and fumigation; 3) all remaining references including reports dealing with compatibility studies, and production and sales of ethylene oxide.

I CHEMISTRY OF ETHYLENE OXIDE, FREON 12, ANALYTICAL METHODS, GAS PERMEABILITY, FLAMMABILITY

1. Alkylene Oxides, Technical Bulletin, Union Carbide Co., N.Y. 17, N.Y.

2. Anderson, Stig, "The Reaction Between Ethylene Oxides and Ammonia," CWK Gleerup, Lund University, Sweden, 1955.

3. Associated Factory Mutual Fire Insurance Companies, Ind. Eng. Chem., 32, p. 882, 1940.

4. Coward, H.F., Jones, G.W., U.S. Bureau of Mines, Bulletin 503, 1957.

5. Curme, Johnston, Glycols, ACS Monograph Series, No. 114, Reinhold Publishing Corp., 1952.

6. Dick, M. and Feazel, C.E., "Resistance of Plastics to Ethylene Oxide," Modern Plastics, November 1960.

7. Eastham, A.M., J. Chem. Soc., pp. 1936-1945, May 1952.

8. Elder G.B., Union Carbide Co., Charleston, W. Va., letter to V.K. Entrekin, October 24, 1961.

9. Elderfield, Robert C., Heterocyclic Compounds, Vol. I, John Wiley and Sons, Inc., N.Y., 1950.

10. Ellis, C., The Chemistry of Petroleum Derivatives, Vol. II, Reinhold Publishing Co., N.Y.

11. Emulsions and Detergents, Carbide and Carbon Corp., N.Y., 1949.

12. Ethylene Oxide, Chemical Safety Data Sheet, SD-38, MCA, Inc.

13. Ethylene Oxide, Technical Bulletin, Allied Chemical and Dye Corp., Nitrogen Div., N.Y.

14. Ethylene Oxide, Technical Data Sheet, Wyandotte Chemical Corp.

15. Ethylene Oxide, Union Carbide Technical Bulletin F-6950, Union Carbide, N.Y., N.Y.

16. Ethylene Oxide Autoignition Testing, Technical Bulletin, Jefferson Chemical Co., Houston, Texas.

17. Ethylene Oxide and Propylene Oxide, The Dow Chemical Co., Midland, Michigan.

18. Flory, P.J., J. Am. Chem. Soc., 62, pp. 1561-1565, 1940.

19. Freon, duPont Technical Bulletin B-2, E.I. duPont de Nemours and Co., Wilmington, Del., 1957.

20. Greenspan, F.P. and MacKeller, D.G. Anal. Chem., 20, p. 1061, 1948.

21. Guseva, V., Chem. Abs., 34, p. 3945, 1940.

22. Haenni, Edward O., et. al., "New Nonflammable Formulations for Sterilizing Sensitive Materials," Ind. and Eng. Chem., 51, No. 5, pp. 685-688, May 1959.

23. Handling Ethylene Oxide, Technical Manual, Wyandotte Chemical Corp., Wyandotte, Michigan.

24. Henderson, R., and Wallace, G.A., "A Simple Apparatus for Determining Gas Permeability of Flexible Films," Food Tech., Vol. X (12), pp. 636-638, 1956.

25. James, G.V., Soap, Perfumery and Cosmetics, 23, pp. 709-711, 1950.

26. Jefferson Chemical Co., letter, 1961.

27. Jefferson Chemical Co., Technical Bulletin on Ethylene Oxide, 1956.

28. Jones, G.W., Kennedy, R.E., "Extinction of Ethylene Oxide Flames with Carbon Dioxide," Ind. and Eng. Chem., 22, p.146, 1930.

29. Kimberly. A.E., Chemist, 15, p.236, 1938.

30. Limido, G.E., et.al., "Pyrolysis of Ethylene Oxide," Third World Petroleum Congress Proceedings, Sec. V, pp.40-48, 1951, (French).

31. Liquid Propellant Safety Manual, The Bureau of Ordnance, Dept. of the Navy, Washington 25, D.C., October 1958.

32. Offens, W.A., et.al., "Determination of Freon in Fumigating Mixtures with Ethylene Oxide: By Measurement of Thermal Conductivity," Anal. Chem., 31, pp.1565-1568, September 1959.

33. Oil, Paint and Drug Reporter, 13, p.5, January 1958.

34. Pennsylvania Engineering Co., letter to V.K. Entrekin, October 20, 1961.

35. Perry, S. and Hilbert, H., J. Am. Chem. Soc., 62, pp.2599-2609, 1940.

36. Petroleum Processing, Vol.X, pp.1763-1765, November 1955.

37. Petrov. A.A., J. Gen. Chem., (U.S.S.R.), Vol.X, p.981, 1940.

38. Russ, J.M., Jr., Ind. Eng. Chem., 22, p.328, 1930.

39. Sanders, Paul, E.I. duPont de Nemours and Co., letter to S.R. Nusbaum, Pennsylvania Engineering Co., October 19, 1961.

40. Stewart, P.B., and Starkman, E.S., Chem. Eng. Prog., 53, pp.41J-45J, 1957.

41. The Handling and Storage of Liquid Propellants, Office of the Director of Defense Research Engineering, Washington 25, D.C., March 1961.

42. The Preparation of Non-ionic and Other Surface Active Agents Based on Ethylene Oxide, Jefferson Chemical Co., Houston, Texas.

43. Waak, R., Alex, H.H., et.al., "Permeability of Polymer Films to Gases and Vapors," Ind. and Eng. Chem., 47, pp.2524-2527, December, 1955.

II STERILIZATION

Methods and Equipment

44. Haenni, E.O. and Fulton, R.A., "Aerosol Sterilants," Soap and Chemical Spec., 35, p. 101, September 1959.

45. Hoffman, Robert K., Decker, Herbert M., and Phillips, Charles R., "A Technique for the Investigation of Bacterial Contamination Inside Electronic Components," Protection Branch Report of Test No. 7-60, Physical Defense Div., Ft. Detrick, Md., March 1960.

46. Kaye, S. and Sierkiewicz, B.F., "Methods and Equipment for Sterilization with Ethylene Oxide Vapor." Abstract of papers presented at the 122nd Meeting of the Am. Chem. Soc., Atlantic City, N.J., September 1952.

47. Lloyd, R.S. and Thompson, E.L., Gaseous Sterilization with Ethylene Oxide, American Sterilizer Co., Erie, Pa., 1958.

48. Miklas, Walter J., Development of Ethylene Oxide-Freon Decontaminant in 16 Ounce Disposable Containers, Biological Labs, Ft. Detrick, Md., January 1958.

49. Perkins, J.J., "Gas Sterilization," Drug and Cosmetics Ind., 87, pp. 178-180, August 1960.

50. Phillips, Charles R., "Gaseous Sterilization," Becton, Dickson Lectures on Sterilization, Seton Hall College of Medicine and Dentistry, 1958.

51. Phillips, C.R., "Gas Sterilization," Drug and Cosmetics Ind., 82, p. 802, June 1958.

52. Phillips, C.R., Gaseous Sterilization, Lea and Febiger Publishing Co., Philadelphia, Pa., 1954.

53. Phillips, C.R., "Practical Aspects of Sterilization with Ethylene Oxide Vapor," Bact. Proc., 50th Meeting Soc. Am. Bact., pp. 23-24, 1950.

54. Stryker, W.H., "Gas Sterilization," Hospital Management, pp. 74-77, March 1958.

Medicine

55. Black, Cotton, Ellington, J. Econ. Entomology, 23, p.226, 1930.

56. Brown, E.W., U.S. Naval Medical Bulletin, 31, p.253, 1933.

57. Brown, E.W., U.S. Naval Medical Bulletin, 32, p.294, 1934.

58. Cotton, J. Econ. Entomology, 23, No.1, 1930.

59. Cotton and Roark, J. Econ. Entomology, 20, p.636, 1927.

60. Cotton and Roark, Ind. Eng. Chem., 20, p.805, 1928.

61. Cotton and Young, Proc. Entomology Soc., 31, p.97, Washington, 1929.

62. Diding, Nils and Kjellman, Hans, Svensk Form. Tidskr., 62, pp.221-228, (Survey, 36 references), 1958.

63. Eve, F.C., J. Am. Med. Ass., April 1, 1944.

64. Fulton, J.D. and Mitchell, R.B., U.S. Armed Forces Medical Journal, pp.425-439, 1952.

65. Gasmaske, 5, pp.3-6, 1933.

66. Ginsberg, H.S., and Wilson, A.T., Proc. Soc. Exp. Biol. and Med., 73, pp.614-616, 1950.

67. Grundy, W.E., et.al., "The Sterilization of Plastic Intravenous Injection Equipment by Ethylene Oxide Vapor," J.Am. Pharma. Assn., Sci. Ed., XLVI, pp.439-442, July 1957.

68. Hansen, H.N. and Snyder, W.C., Photopathology, 37, p.369, 1947.

69. Hutner, S.H. and Bjerknes, C.S., Proc. Soc. Exp. Biol. and Med., 67, pp.393-397, 1948.

70. Kaye, Saul, J. of Laboratory and Clinical Medicine, 35, pp.823-828, May 1950.

71. Kaye,S., Irminger, A.B. and Phillips, C.R., The Journal of Laboratory and Clinical Medicine, 40, pp.67-72, 1952.

72. Kersten, H.E., Disinfektian, 7, pp.65-80, 1923.

73. "Literature on Sterilization," Manuf. Chem., 32, p.94, February 1961.

74. Perkins, John J., Principles and Methods of Sterilization, Charles C. Thomas, Springfield, Ill., 1956.

75. Phillips, C.R., and Kaye, Saul, "The Sterilizing Action of Ethylene Oxide, I, II, III, IV.," Am. J. of Hygiene, 50, pp.270-306, November 1949.

76. Phillips, C.R., and Warshowsky, B., Am. Rev. Microb., 12, pp.525-550, 1958.

77. Reddish, George F., Antiseptics, Disinfectants, Fungicides and Chemical and Physical Sterilization, 2nd edition, Lea and Febiger Publishing Co., Philadelphia, Pa., 1957.

78. Rideal, Samuel and Rideal, Eric K., Pharm. J., 107, p.200, 1921.

79. Roberts, J.L., et.al., J. Bact., 45, p.40, 1943.

80. Robertson, O.H., et.al, J. Infect. Diseases, 83, pp.124-137, 1948.

81. Schley, Hoffman, and Phillips, Appl. Microb., 8, p.15, 1961.

82. "Some Physicochemical Aspects of Ethylene Oxide," Antincendo, 9, pp.369-375, 1957.

83. Sroka, K.H., "A Review of Health Hazards Caused by Ethylene Oxide, Ethylene Glycol and Its Esters and Other Polyhydric Alcohols," Seifen-Ole-Fette-Wachse, 80, 1954.

84. "Sterilization of Media for Biochemical Processes," Ind. and Eng. Chem., pp.52-66, January 1960.

85. Sykes, George, Disinfection and Sterilization, D. Van Nostrand Co., N.Y.

86. The U.S. Pharmacopia, 14th edition, 1950.

87. Wilkinson, G.R., "Sterilization of Medical Products," Manuf. Chem., 31, pp.427-433, October 1960.

88. Wilson and Bruno, Journal of Experimental Medicine, 91, pp.449-458, 1950.

Food

89. Ball, C.O. and Olson, F.C.W., Sterilization in Food Technology, McGraw-Hill Book Co., N.Y., 1957.

90. Duval, L., Food Industries, 2, December 1930.

91. Hall, L.A., Food Industries, 10, p.424, 1938.

92. Hall, L.A., Food Packer, 32, No.12, pp.26-28,47, 1951.

93. Hankins, O.G., et.al., Food Technology, 4, pp.33-38, 1950.

94. James, L.H., Food Industries, 10, p.428, 1938.

95. McBride, R.S., Food Industries, 10, p.430, 1938.

96. Prickett, P.S., Process Institute Food Technology, 1941.

97. Smith, H.W., Food Industries, 12, 1940.

98. Whelton, R., et.al., Food Industries, 18, 1946.

99. Whelton, R., Phaff, H.J., Mrak, E.M. and Fisher, C.D., Food Industries, 18, 1946.

100. Yesair, J. and Williams, O.B., Food Research, 7, p.118, 1942.

Miscellaneous

101. Back, E.Z. and Cotton, R.T., Industrial Fumigation Against Insects, U.S. Dept. Agri. Circ. 369.

102. Clark, R.F., Soil Science, 70, pp. 345-349, 1950.

103. Dalton, F.H., and Hurwitz, C., Soil Science, 66, pp. 233-238, 1948.

104. "Efficiency of Carboxide Gas as an Insecticidal Fumigant for Naval and Merchant Vessels," Reprint F-4880, Union Carbide Chemical Co.

105. Feazel and Lang, Soap and Chemical Specialties, Birmingham, Ala., October 1959.

106. Fulton, J.D. and Mitchell, R.B., "Sterilization of Footwear," U.S. Armed Forces Medical Journal, 3, pp. 425-439, 1952.

107. "Fumigation with Ethylene Oxide, "P.B. 103, 785, His Majesty's Stationary Office, February 1951.

108. Kilagre, L.B., Soap Sanitary Chemicals, 22, p. 122, 1946.

109. Lorenz, F.W., et. al., Poultry Science, 29, pp. 545-547, 1950.

III GENERAL

110. Aoki, Kenneth K., An Investigation of the Parameters Affecting Storage Stability of Ethylene Oxide, WADC TR 58-341, July 1 1958, (Confidential).

111. Ashkenaz, D.M., Glass Packer, January 1954.

112. Carson, John K., "Tests for Effects of Freoxide on Electronic Apparatus," Engineering Section, Safety Division, Ft. Detrick, Md., August 15, 1960.

113. Coles, K.F., and Popper, Felix, Ind. Eng. Chem., 42, p. 1434, 1950.

114. "Ethylene Oxide-Big Growth Item," Chem. and Eng. News, 36, pp. 19-21, June 30, 1958.

115. Handbook of Toxicology, Vol. III, Insecticides, A Compendium, The Committee on the Handbook of Biological Data, Div. of Biology and Agriculture, National Academy of Sciences, National Research Council, WADC TR 55-16, June 1959.

116. Hers and Tilton, Ind. Eng. Chem., 42, p. 1251, 1950.

117. Lubatti, J. Soc. Chem. Ind., 63, p. 133, 1944.

118. Skeen, Chemical Engineer, 57, p. 331, 1950.

119. White, Earl L., Battelle Memorial Institute, letter to V.K. Entrekin, Hughes Aircraft Co., October 12, 1961.

EXPERIMENTAL STUDIES

Materials and components for which insufficient data were available in the literature were tested for resistance to 257 °F and for compatibility with ethylene oxide-Freon 12 and with 5 percent formaldehyde in anhydrous methanol. The test conditions for heat resistance and ethylene oxide-Freon 12 compatibility were chosen to evaluate the ability of the materials and components to satisfactorily undergo two sterilization cycles of each process. The formaldehyde-methanol tests were designed to evaluate the effect of the liquid on parts that could remain wet with the liquid sterilant for a period of 4 weeks.

Heat Sterilization Studies

General Material Studies

The following materials expected to be used for the Surveyor, and for which little data were already available, were evaluated for their ability to withstand heat sterilization at 257° F:

Adhesives

RTV 731 silicone, Dow Corning Corp.

FM1000 epoxy polyamide, Bloomingale Rubber Co.

No. 5302 epoxy, Epoxylite Corp.

Epibond 104 (catalyst HN-927) Furane Plastics, Inc.

Plastics

Aluminized mylar film, Minnesota Mining and Manufacturing Co.

Lexan polycarbonate film, General Electric Corp.

Elastomers

Viton A elastomer, 8250-85, Linear Corp.

Buna N, 758-70, Precision Rubber Products Co.

Potting and encapsulating resins

Stycast 1090 epoxy syntatic foam, Emerson and Cumings Co.

Circuit board materials

HMS 16-1085 epoxy glass board

HMS 16-1026 paper base phenolic board

HMS 16-1085 and HMS 16-1026 coated with HP16-66 formula No. 2 epoxy polyamide

Sample Configurations. Adhesives were tested as lap shear specimens in which two strips of 6061-T4 aluminum 1 inch in width and 4 inches in length were bonded with the adhesive over an area of 1 square inch or 0.5 square inch with the free ends extending parallel in opposite directions. PT401 primer was used on the RTV 731 lap shear specimens. Elastomers were formed into 1/8-inch by 1.3-inch O-rings and 1/4-inch by 1-inch

disks. Potting materials were tested as "four-rod" specimens. Circuit board materials were tested as comb pattern samples as described in HMS 16-1026.

Procedure. The specimens were placed in a mechanical circulating oven thermostatically controlled to within ± 4 °F. The temperature was raised to 257° F and maintained for 48 hours. Appropriate properties were determined on a minimum of three test specimens and three control specimens (unaged). The specimens were examined for changes in appearance and the properties listed in Table 3 were determined.

Results. Results of exposure of materials to 257° F for 48 hours are given in Table 4. No appreciable change in appearance of any of the samples was noted except for a slight darkening of the circuit boards and the adhesive, FM1000. Also, the edges of the aluminized mylar curled.

The shear strength of Epibond 104 and Epoxylite 5302 adhesives were not significantly changed by heat aging. The strength of FM1000 increased a small amount, and that of RTV 731 increased substantially -- over 250 percent. This increase indicates that the adhesive, ordinarily a room temperature curing material, underwent a post cure which was obviously beneficial.

Electrical properities of Stycast 1090 were slightly improved by the heat aging. The exposure also slightly improve the electrical properties of the circuit boards.

Aluminized mylar underwent a 3.6-percent decrease in weight after exposure. Lexan suffered a small increase in weight and a small decrease in elastic modulus.

Viton A and buna N were significantly affected by the heat exposure. Viton A underwent a 19-percent decrease in tensile strength and a 19-percent increase in ultimate elongation, whereas buna N underwent a 53-percent increase in tensile strength and a 12-percent decrease in ultimate elongation. Since a considerable variation in tensile strength of buna N control specimens was noticed, the tensile strength increase may not truly indicate the effect of heat upon that material.

Surveyor Compartment Cover Thermal Switch Case

The thermal switches located within the Surveyor thermally controlled electronic compartments presented a serious heat compatibility problem. Polystyrene had been originally chosen for the design of the switch cases because it possessed the desired property of a very low thermal conductivity to elastic modulus ratio. However, polystyrene could not withstand the heat sterilization temperature. This necessitated a search for a material which had comparable elastic modulus and thermal conductivity to polystyrene, but a higher heat distortion temperature.

TABLE 3. PROPERTIES OF MATERIALS MEASURED AFTER EXPOSURE TO 257° F

Material	Property	Test Method*
Adhesives	Adhesion strength in shear	ASTM D816-55 was followed, except that on all specimens but RTV 731, 0.5-inch overlap specimens were used and rate of pull was 0.05 inch per minute at room temperature
Aluminized mylar	Weight change	
Lexan	Weight change elastic modulus	ASTM D1530-58T
Potting and encapsulating resins	Dielectric constant Dissipation factor Insulation resistance Weight change	"Four-rod" test (nonstandard)
Circuit board materials	Insulation resistance	ASTM D618, ASTM D257, HMS 16-1085, HMS 16-1026
Elastomers	Tensile strength and percent elongation	ASTM D1414. Specimens were pulled at rate of 2 inches per minute at room temperature

*Nonstandard test methods are described in "Surveyor Sterilization, Part I: Compatibility of Materials and Components with Heat and Ethylene Oxide-Freon 12," Myra Willard, RS277, January 1962.

TABLE 4. EFFECT OF EXPOSURE TO 257°F FOR 48 HOURS ON MATERIALS

Specimen	Results*	Remarks
Adhesives		
RTV 731	+	269 percent increase in shear strength
FM 1000	+	13 percent increase in shear strength

+ = compatible

TABLE 4. (Continued)

Specimen	Results*	Remarks
Epoxylite 5302	+	
Epibond 104	+	
Plastics		
Aluminized mylar	+	
Lexan	+	
Elastomers		
Viton A, linear 8250-85	+	19 percent decrease in tensile strength
Buna N, precision 758-70	+	53 percent increase in tensile strength
Encapsulating resins		
Stycast 1090	+	Slight improvement in electrical properties after exposure
Circuit board materials		
HMS16-1085	+	
HMS16-1085 with HP16-66 coating	+	
HMS16-1026 with HP16-66 coating	+	
* + = compatible		

Procedure of Material Evaluation. After a survey of the literature was made, three materials were chosen for evaluation: Rexolite 1422, a crosslinked polystyrene; Ablatalite, a polyurethane/epoxy resin (developed by Thiokol RMD); and MIL-P-18177 formica type GEB epoxy glass laminate (mounting ring) plus MIL-P-18177 style #120 glass fabric impregnated with Shell Epon 828 (case wall). A comparison of manufacturers' data on the properties of these materials is shown in Table 5.

TABLE 5. PROPERTIES OF CANDIDATE THERMAL SWITCH CASE MATERIALS (MANUFACTURERS' DATA)

Material	Tensile Strength, psi	Elastic Modules, psi	Thermal Conductivity cal/sec/ cm^2/°C/cm	Heat Distortion Temperature at 264 psi °F
Rexolite 1422	9000	4.0×10^5	3.5×10^{-4}	230
Ablatalite	2200	3.1×10^5	2.5×10^{-4}	*
MIL-P-18177				
Ring material	65200 (flexural ultimate)	1.8×10^6		>300
Wall material	49500	1.8×10^6		
Polystyrene	5000 to 9000	4.5×10^5	3.0×10^{-4}	150-195

*Unknown

Samples of the materials were subjected to tensile and heat distortion tests. Cases were also fabricated to the required 10-mil wall thickness from the materials to test machinability and mechanical properties.

Results. Results of tensile tests on Rexolite and Ablatalite are given in Table 6. Both materials exhibited satisfactory characteristics although the tensile strength of Ablatalite was somewhat low. Tensile tests were not made on the individual MIL-P-18177 materials as it was felt that more meaningful data would be obtained from the composite structure.

Rexolite was readily machinable, but it was found that the cases would distort at 257°F. Therefore this material was eliminated from further consideration as a switch case material.

Some difficulties were experienced with machining Ablatalite. When machined very thin the material was quite brittle. An average of one to two out of every four cases failed either during machining or after slight handling. Failures were exhibited by cracking or by pieces flaking out of

TABLE 6. TENSILE TESTS ON REXOLITE 1422 AND ABLATALITE

Material	Tensile Strength, psi	Elastic Modulus, psi
Rexolite 1422	6200	4.7×10^5
Ablatalite		
Batch 1	2900	4.8×10^5
Batch 2	3600	4.5×10^5
Batch 3	3757	4.7×10^5

the 10-mil walls. This phenomena made Ablatalite unacceptable for this application.

The MIL-P-18177 cases were made by bonding the case wall material to the mounting rings with HP16-41 Class II adhesive. The case wall was made of 4-mil stock to compensate for the higher thermal conductivity of the material. No problems were experienced with this process. Tests have not yet been conducted on the cases but it is expected that tensile failure will occur at 0.125 pound load*. This material seems most acceptable for use in making thermal switches cases but a final decision must await tests on the cases.

Ethylene Oxide-Freon 12 Compatibility Studies.

Materials and Components

The 12 percent ethylene oxide-88 percent Freon 12 gas mixture was obtained in 100-pound cylinders from the Matheson Co., Inc. Analysis of gas samples from the test apparatus gave ethylene oxide concentration averaging around 455 mg/l. The analytical procedure used was a modification of the method by Miklas** based on the following chemical reactions:

---

*Using the equation stress = load/area, 0.004 inch by 6.3 inches wall at 49,500 psi = 0.125 pound load at failure.

**Walter J. Miklas, "Development of Ethylene Oxide-Freon Decontaminant in 16-ounce Disposable Containers," Biological Laboratories, Fort Detrick, Maryland, January 1958.

$$2\,H_2C\text{-}CH_2 \;(\text{O}) + MgCl_2 + 2H_20 \rightarrow 2H_2C\text{-}CH_2\,(\text{OHCl}) + MG(OH)_2$$

ethylene oxide	magnesium chloride	ethylene chlorohydrin	magnesium hydroxide

$$Mg(OH)_2 + H_2SO_4 \rightarrow MgSO_4 + 2H_2O$$

sulfuric acid	magnesium sulfate

Materials and components exposed to the gas mixture are listed below:

Adhesive

RTV 731 silicone, Dow Corning Corporation (HP16-48)

FM1000 epoxy polyamide, Bloomingdale Rubber Co. (HP16-80)

No. 5302 epoxy, Epoxylite Corp. (HP16-74)

Epibond 104 (catalyst HN-927), Furane Plastics, Inc. (HP16-41)

Eccobond 45LV adhesive, cured with catalyst 15 LV using a ratio of 100 pbw adhesive/100 pbw catalyst, Emerson & Cuming Corp.

Plastics

Lexan polycarbonate film, General Electric Corp.

Kel F fluorocarbon, Minnesota Mining and Manufacturing Corp.

Polystyrene film and sheet

Potting and Encapsulating resins

Stycast 2651 epoxy syntactic foam cured with catalyst 11 using a ratio of 100 pbw resin/8 pbw catalyst, Emerson and Cuming Corp.

Eccoseal W19 epoxy casting resin, cured with catalyst 11 using a ratio of 100 pbw resin/16 pbw catalyst 11, Emerson and Cuming Corp.

Stycast 1090 epoxy syntactic foam (12 percent catalyst No. 11), Emerson and Cumings Corp.

Epon 826 epoxy, amine cured*, Shell Chemical Co.

Epon 826 epoxy, anhydride cured*, Shell Chemical Co.

Epon 828 epoxy, amine cured*, Shell Chemical Co.

Epon 828 epoxy, anhydride cured*, Shell Chemical Co.

DC 881 silicone, Dow Corning Corp.

Elastomers

Viton A, 8250-85, Linear Corp.

Neoprene W, No. 363-70, Plastics and Rubber Products Co.

LS-53 fluorosilicone, TH1057, Stillman Rubber Co.

Buna N, 758-70, Precision Rubber Products Co.

AMS 3302 silicone rubber sheet

Metals and metal coatings

MIL-A-8625 Type I anodized aluminum

MIL-A-8625 Type II anodized aluminum

MIL-A-8625 Types I and II anodized aluminum coated with molydenum disulfide dry film lubricant (phenolic binder), Dri-Lube 6, Dri-Lube Corp.

AZ 31B magnesium

Dow 17 lite on AZ 31 B magnesium

Dow 17 heavy on AZ 31 B magnesium

DU lead teflon coating on steel, Garlock Packing Co.

---

*Composition of the curing agents:

Amine - 54 parts by weight m-phynylene diamine, 100 parts by weight 2 aminobenzenethiol.

Anxhydride - nadic methyl anhydride plus an amount of benzyldimethylamine equal to 1 percent of the weight of the anxhydride and resin combined.

The resin and curing agent were combined in a stoichiometric ratio of 1:00.

Rokide, ziroconium oxide coating on 321 stainless steel and on molybdenum, Thiokol Elkton Corp.

B3506-41-3 (HP4-135), white inorganic silicate thermal control coation, Hughes development material.

Crystals

Sodium chloride

Greases

DC 4 silicone grease, Dow Corning Corp.

Circuit board materials

HMS 16-1085 epoxy glass board

HMS 16-1026 Paper base phenolic board

HMS 16-1085 and HMS 16-1026 coated with HP 16-66, formula No. 2 epoxy polyamide

Type 591 (8923) mylar magnetic tape, Minnesota Mining and Manufacturing Corp.

Silicon solar cells, manufactured by Hoffman and by International Rectifier Co.

Bonded to Carpenter 42 alloy with Dow Corning RTV 731

Resistors

Sage S2W, wirewound power

Allen Bradley TR, carbon composition

Allen Bradley CB, carbon composition

Allen Bradley CAH, metal film

Mep Co. R-170N, carbon film

International Rectifier Corp., XLT-A, metal film

Texas Instruments CG 1/4, carbon film

Victoreen RX, high meg. carbon film

Ultronix 205A, Accurate, wirewound

Weston 9849-4, metal film

Weston 9850-2, metal film

Daven RN70C, metal film

Dale ARS-2, power wirewound

International Rectifier Corp, MEC, metal film

Westinghouse 802-05 thermistor

Electra DCM 1/2, carbon film

California resistor SAV, power, wirewound

Sprague RN60B, carbon film

American Components C1, metal film

Texas Instruments TM 1/4, sensitor

Resistance Products WFH, metal film

Victory Engineering thermistor

Capacitors

El Menco DM, mica

Sprague 196P, paper

Sprague 118P, paper-mylar, metallized

Gudeman XHF, paper

Sprague 150D, solid tantalum

Kemet KH50, solid tantalum

Mallory XTM, liquid tantalum

RF Coils

Delevan Series 1537

Essex (Wee-ductor)

Connectors

Microdot Series 43, HAC X988205 and X988206

Microdot Series 43, HAC X988205 and X988206 with silicone grommets removed

Microdot Series 52, HAC X988211 and X988212

General RF Fittings 822, HAC X988213 and X988214

Continental Connector Corp. CS Series, HAC X988202

Cannon D Type (DCM-37P-NMI & DCM-37S-NMI) HAC X922180 (HUG 988201)

Motors

Direct current stepper motor, Induction Motors of California, Specification HUG X988350

Procedure of Compatibility Test

The apparatus used to expose the test specimens to the gas sterilant is shown in Figure 4. To prevent loss of ethylene oxide by absorption, the exposure was conducted in an all-glass system except for Teflon plugs and gaskets. The specimens were placed in the exposure kettles stabilized at 100°F and the pressure in the apparatus reduced to 5 mm Hg; 20 mm Hg of water vapor were then added. The ethylene oxide-Freon 12 gas mixture was introduced into the expansion chamber, allowed to expand into the remainder of the apparatus to a pressure of 780 mm Hg. The specimens were thus exposed for 24 hours. At the end of the exposure period, ethylene oxide-Freon 12 was flushed out of the apparatus with nitrogen through the $MgCl_2 \cdot H_2SO_4$ bubblers to absorb the ethylene oxide, and the specimens were removed.

To determine the effect on anodized aluminum of the gas sterilant, the exposure was conducted in a glass bomb fitted with a needle valve so that the apparatus could be transported and gas samples could be accurately removed for analysis. The exposure period was also lengthened to 90 hours so that any reaction products formed could be present in sufficient concentration to analyze.

The specimens were examined for changes in appearance, and the properties listed in Table 7 were measured. Appropriate properties were determined on a minimum of three test specimens and three control specimens. Gas chromatographic analysis was performed on ethylene oxide-Freon 12 gas samples exposed to anodized aluminum.

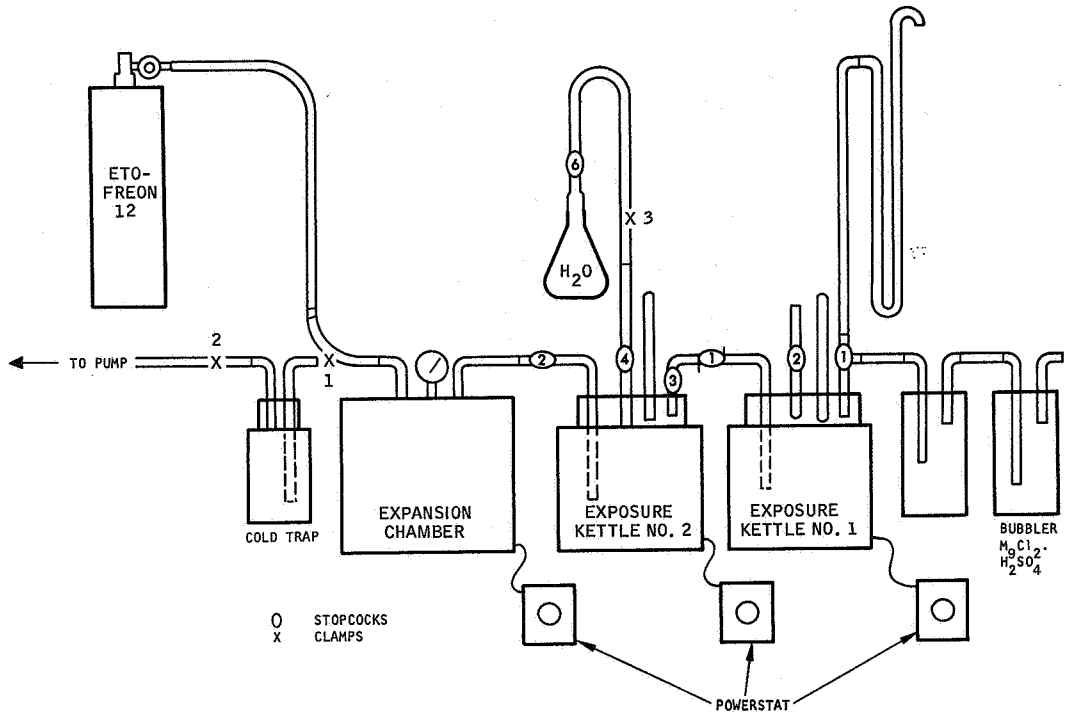

Figure 4. Apparatus for Exposing Materials and Components to 12 Percent Ethylene Oxide -88 Percent Freon 12

Results

The effects of ethylene oxide-Freon 12 on materials are shown in Table 8. Significant property changes are noted in the remarks column.

No change in appearance of any of the exposed specimens was noticed, except for the polystyrene coupons which showed very slight crazing. Crazing was not noticed on the polystyrene film strips. There was also a slight lightening in color of the mylar tape.

Kel-F exhibited no change in weight, volume, or hardness, while Lexan suffered a 3.3 percent weight increase and a slight decrease in elastic modulus. There was no appreciable effect on the weight, volume, or elastic modulus of polystyrene.

Some deterioration in electrical properties of DC881 and Eccoseal W19 followed exposure to the sterilant gas. A small decrease in insulation resistance occurred in Eccoseal W19. Slight increases in dielectric constant of both materials also resulted. Percent dissipation factor of

TABLE 7. PROPERTIES MEASURED ON MATERIALS AND COMPONENTS EXPOSED TO 12 PERCENT ETHYLENE OXIDE-88 PERCENT FREON 12

Specimen	Property	Sample Configuration	Test Method*
Adhesives	Adhesion strength in shear	Lap shear specimens	ASTM D816-55 was followed except that on all specimens but RTV 731, 0.5-inch overlap specimens were used and rate of pull was 0.05 in./min. Samples were pulled at room temperature
Lexan and polystyrene	Elastic modulus	1/2 x 6 x 0.005 inch film	ASTM D1530-58 T. Specimens were pulled at the rate of 0.05 in./min at room temperature
Kel-F	Weight change	3/4 inch diameter x 1/2 t. buttons	
	Volume change	3/4 inch diameter x 1/2 inch t. buttons	Bouyancy method
	Hardness	3/4 inch diameter x 1/2 inch t	ASTM D676
Potting and encapsulating resins	Weight change (DC881 only)	1/4 x 1/2 x 1/2 inch	
	Volume change (DC881 only)	1/4 x 1/2 x 1/2 inch	Bouyancy method
	Dielectric constant	"Four-rod" specimen	"Four-rod" test (nonstandard)
	Dissipation factor	"Four-rod" specimen	
	Insulation resistance	"Four-rod" specimen	
Elastomers	Weight change	1/8 x 1/3 inch diameter O-ring	
	Volume change	1/8 x 1.3 inches diameter O-ring	Bouyancy method
	Tensile strength and percent elongation	1/8 x 1.3 inches diameter O-ring	ASTM D1414
Metals	Weight change	Rectangular coupons	
	Microscopic examination		
B3506-41-3 inorganic silicate coating	Solar absorptivity	Coating on 1/2 inch diameter disc	Measured on Gier-Dunkel instrument
Other metal coatings	Weight change	Coating on 1 x 2 inch coupon	
	Film adhesion	Coating on 1 x 2 inch coupon	Nonstandard

* Nonstandard test methods are described in Surveyor Sterilization, Section 1. (See footnote to Table 3.)

TABLE 7. (Continued)

Specimen	Property	Sample Configuration	Test Method*
Sodium chloride crystal	Change in infrared transmission	1/2 inch diameter x 3/4 inch crystal	Measured on Perkin-Elmer Model 21 infrared spectrophotometer
Grease	Weight change		
Circuit board materials	Insulation resistance	Combined test patterns	ASTM D618, ASTM D257, HMS 16-1085, HMS 16-1026
Magnetic tape	Weight change	Section of tape	
Solar cell	Power degradation		Power degradation of maximum power-point on E versus I curve determined
Resistors	Resistance		Measured with Electro-Instruments Corp. Digital ohmmeter, accurate from 0.01 to 0.02 percent
Capacitors	Capacitance		Measured on Marconi bridge; HAC Specification X988500
	Dissipation factor		
	Leakage current		
RF coils	Inductance		MIL-C-15305. Measured with Q-meter, Boonton Corp.
	Q (quality factor)		Measured with Q-meter
	Capacitance		Measured on RX meter, Boonton Corp.
	Resistance		Measured with resistance bridge
Connectors	Dielectric strength		Hipot test at 100 v rms, HAC specification X988205
	Insulation resistance		MIL-Std-202B, Method 301 MIL-Std-202B, Method 302
Motors	Stall current, stall torque, insulation resistance, dielectric withstanding voltage		**

*Nonstandard test methods are described in Surveyor Sterilization, Section 1. (See footnote to Table 3.)

**Procedures used are described in Component Evaluation Laboratory Test Report A-1388 by K. M. Lyons, "DC Stepper Motor," July 1962.

TABLE 8. EFFECT OF 12 PERCENT ETHYLENE OXIDE-88 PERCENT FREON 12 ON MATERIALS AND COMPONENTS EXPOSED AT ONE ATMOSPHERE AND 30 TO 50 PERCENT RELATIVE HUMIDITY FOR 24 HOURS

Specimen	Results*	Remarks
Adhesives		
RTV731	+	Because of low initial shear strength which decreased 19 percent after exposure, can only be used where leads are low.
FM1000	+	
Epoxylite 5302	+	17 percent decrease in shear strength
Epibond 140	+	12 percent decrease in shear strength
Eccobond 45LV	+	8 percent decrease in shear strength
Plastics		
Lexan	+	3.3 percent weight increase
Kel-F	+	
Polystyrene	+	
Potting and Encapsulating Resins		
Stycast 2651	+	Percent dissipation factor increased from 0.165 to 1.51
Eccoseal W19	+	Dielectric constant increased from 4.50 to 4.65
Stycast 1090	+	
Epon 826, amine cured	+	
Epon 826, anhydride cured	+	
Epon 828, amine cured	+	
Epon 828, anhydride cured	+	
DC881	+	Dielectric constant increased from 2.97 to 3.23

* + = compatible

TABLE 8. (Continued)

Specimen	Results*	Remarks
Elastomers and Rubbers		
Viton A, linear 8250-85	+	Tensile strength decreased 8 percent
Neoprene W, Parco 363-70	+	Tensile strength decreased 16 percent; ultimate elongation decreased 20 percent
LS-53 Stillman TH1057	+	Tensile strength decreased 18 percent; ultimate elongation decreased 18 percent
Buna N, precision 758-70	+	Ultimate elongation decreased 14 percent
AMS 3302	+	
Metals and Metal Coatings		
MIL-A-8625 Type I anodized aluminum	+	
MIL-A-8625 Type II anodized aluminum	+	
Dri-lube 6	+	
AZ31B magnesium	+	
Dow 17 lite	+	
Dow 17 heavy	+	
DU lead teflon coating	+	
Rokide	+	
B3506-41-3 (HP 4-135) coating	+	
Crystals		
Sodium chloride	+	
Grease		
DC4	+	Repeated exposures causes formation of an oily material

* + = compatible

TABLE 8. (Continued)

Specimen	Results*	Remarks
Circuit Board Materials		
HMS 16-1085	+	
HMS 16-1026	+	
HP16-66 coating on HMS16-1085 and HMS-16-1026 boards	+	
Type 591 mylar magnetic tape	?	0.4 percent increase in weight; electrical tests needed to establish compatibility
Hoffman solar cells	+	8 percent degradation of power
International Rectifier solar cells	+	5 percent degradation of power
Resistors		
Sage S2W	+	
Allen Bradley, TR, CB	+	Small increase in resistance
MepCo R-170N	+	
International Rectifier XLT-A	+	
Texas Instruments CG 1/4	+	
Victoreen RX	+	
Ultronix 205A	+	
Weston 9849-4	+	
Weston 9850-2	+	
Daven RN 70C	+	
Dale ARS-2	+	
International Rectifier MEC	+	
Westinghouse 802-05	+	
Electra DCM 1/2	+	
California Resistor SAV	+	
Sprague RN60B	+	
American Components C1	+	
Texas Instruments TM 1/4	+	
Resistance Products WFH	+	
Victory Thermistor	+	

* + = compatible

TABLE 8. (Continued)

Specimen	Results*	Remarks
Capacitors		
El Menco DM	+	
Sprague 196P and 118P	+	
Gudeman XHF	+	
Sprague 150D	+	Very small increase in leakage current
Kemet KH50	+	
Mallory XTM	+	
RF Coils		
Delevan Series 1537	+	
Essex wee-ductor	+	
Connectors		
Microdot Series 43	+	Small decrease in insulation resistance
Microdot Series 43 with silicone grommets removed	+	
Microdot Series 52	+	
General RF Fittings 822	+	
Continental CSM series	+	
Cannon DCM-37P-NMI & DCM-37S-NMI	+	
Motors		
HUG X988350	+	

* + = compatible

Stycast 2651 increased a significant amount, while electrical properties of the remaining resins were unaffected by the gas.

Neither weight nor volume of the neoprene, LS-53, buna N, and Viton A elastomers were significantly changed by exposure to the sterilant. LS-53 exhibited a slight decrease in both weight and volume whereas buna N suffered a slight increase in value of these properties. There was practically no change in either weight or volume of neoprene. Tensile properties of buna N were the least affected by the exposure. Its tensile strength was reduced only 0.7 percent and its elongation reduced 13.9 percent. Tensile strength and ultimate elongation of neoprene and LS-53 decreased between 16 and 20 percent. Viton A showed an appreciable change in tensile strength only--a decrease of only 8 percent.

The sterilant gas apparently had no deleterious effect on silicone rubber and silicone grease, or on the metals and metal coatings tested. MIL-A-8625, Type II, anodized aluminum showed a slight weight increase, and that material coated with molybdenum disulfide showed a slight decrease in weight. It has been reported that highly oxidized surfaces such as this can catalyze polymerization of ethylene oxide*. To what extent this occurred with ethylene oxide diluted with Freon 12 was therefore investigated, using gas chromatorgraphy. Analysis of ethylene oxide-Freon 12, made before and after exposure to MIL-A-8625 Type II anodized aluminum for 90 hours, revealed no change in either the composition or concentration of the gas. Either the exposure was not long enough to produce ethylene oxide polymerization or the presence of Freon 12 effectively retarded the reaction.

Among the adhesives tested, FM 100 was the least affected by the sterilant gas. Its shear strength decreased only 1.9 percent. The shear strengths of RTV731, Epoxylite 5302 and Epibond 104 decreased 17, 17, and 12 percent respectively. These decreases are significant but the values are still within acceptable ranges. The strength of Eccobond 45LV decreased 8 percent.

No change in the infrared transmitting characteristics of a sodium chloride crystal occurred after sterilant gas exposure. It was thought that humidity during exposure would cloud the crystal surface sufficiently to cause some reduction in transmission, but apparently a 24-hour exposure is not long enough. The period of exposure needed to produce such an effect should be determined.

There was no apparent loss of adhesion of any of the bonded parts of the solar cells after exposure. Significant though small power degradations were found for both types.

---

*Letter from Earl L. White, Battelle Memorial Institute, to V. K. Entrekin, Hughes Aircraft Company, 12 October 1961.

Resistor resistance was affected very little by the exposure. Most differences in values were within the reproducibility of the measurements. There were more changes in values of the carbon film and carbon composition resistors than the metal film and wirewound resistors. However, these changes could occur just during shelf aging of the resistors. All values remained within specification limits.

Electrical properties of capacitors and RF coils were also affected very little by the sterilant. The largest changes in values were exhibited by Sprague 150D capacitors rated at 100 micromicrofarads-20 volts dc. After the stepper motors were exposed no significant changes were exhibited in stall current, stall torque, dielectric standing voltage, or insulation resistance.

Microdot Series 43 connectors containing silicone grommets showed no deterioration in dielectric strength but suffered some decrease in insulation resistance after sterilant exposure. The connectors were subjected to two 24-hour exposures to the gas mixture, followed each time by measurement of electrical properties. The decrease in insulation resistance after the second exposure was greater than after the first in many cases, although all values were within specification requirements. This suggests that deterioration rate due to ethylene oxide exposure is not linear but increases with exposure. When the silicone grommets were removed, insulation resistance of the connnectors was unaffected by the exposure. Although slight changes in contact voltage of the other connectors followed sterilant exposure, the values remained within specification limits. Dielectric strength and insulation resistance of the connectors also were relatively unaffected by the exposure.

Formaldehyde-Methanol Liquid Sterilant Compatibility Studies

Materials and Components

The formaldehyde in anhydrous methanol solution, obtained from Dynamic Science Corp., had a nominal formaldehyde concentration of 5 percent. Assay of the solution, according to the procedure described in Section 3, however, yielded a formaldehyde concentration of 3.64 percent.

The following materials and components were tested for compatibility with the liquid sterilant:

MIL-A-8625 Type I anodized aluminum

MIL-A-8625 Type I anodized aluminum coated with molybdenum disulfide dry film lubricant, Drilube Corp.

MIL-P-997 silicone fiberglass

Viton A elastomer, 8251-70, Linear Corp.

HMS 16-1085 epoxy glass circuit board material

HMS 16-1085 epoxy glass circuit board coated with HP16-66, formula No. 2 epoxy polyamide

HMS 16-1026 paper base phenolic circuit board coated with HP16-66, formula No. 2 expoxy polyamide

Stycast 1090 epoxy syntactic foam encapsulating material, Emerson and Cuming Corp.

Epon 826 epoxy encapsulating material, amine cured*, Shell Chemical Corp.

Epon 826 epoxy encapsulating material, anhydride cured*, Shell Chemical Corp.

HAC Specification X988200 printed circuit connectors, Cannon Electric Co. DPZ series

Procedure of Compatibility Tests

Sample configurations are described in Table 9. Three to five specimens of each material were placed in a polyethylene bag. The formaldehyde-methanol solution was poured over the specimens to wet them thoroughly; the bag was sealed and placed in a glass container which was also sealed, then set aside for 4 weeks. At the end of the exposure period the specimens were removed, washed thoroughly with water, and dried. The specimens were examined for changes in appearance, and the properties listed in Table 9 were measured. Appropriate properties were determined on a minimum of three test specimens and three control specimens.

---

*Composition of the curing agents

Amine - 54 parts by weight m-phenylene diamine, 100 parts by weight 2-aminobenzenethiol

Anhydride - nadic methyl anhydride plus an amount of benzyldimethylamine equal to 1 percent of the weight of the anhydride and resin combined

The resin and curing agent were combined in a stiochiometric ratio of 1:00.

TABLE 9. PROPERTIES MEASURED ON MATERIALS AND COMPONENTS EXPOSED TO FORMALDEHYDE-METHANOL

Specimen	Sample Configuration	Property Measured	Test Method*
Anodized aluminum, coated and uncoated	Coupons, 3 x 5 x 0.064 inch	Weight change	
Silicon fiberglass	"Dogbone" tensile specimen	Tensile strength and elastic modulus	ASTM D 638-58T
	Coupons, 3/4 inch square	Weight change Volume change	Buoyancy method
Viton A elastomer	O-rings, 1/8 x 1.3 inch diameter	Weight change Volume change Tensile strength and percent elongation	Buoyancy method ASTM D 1414
Circuit board materials	Comb test pattern as described in HMS16-1026	Insulation resistance	ASTM D 618, D257 HMS16-1085, HMS16-1026
Encapsulating materials	"Four-rod" specimen	Dielectric constant Dissipation factor Insulation resistance	"Four-rod" test (nonstandard)
Connectors	----	Dielectric strength Insulation resistance Contact voltage drop	MIL-STD-202, Method 301 MIL-STD-202, Method 302B MIL-STD-202, Method 307

*Nonstandard test methods are described in Surveyor Sterilization Part I (see footnote to Table 3)

Results

Properties of the samples exposed to formaldehyde-methanol solution are given in Table 10. The appearances of anodized aluminum, plain and molybdenum disulfide coated, were apparently unchanged after the exposure. Both underwent small decreases in weight.

Formaldehyde-methanol had little effect on the properties of MIL-P-997 silicone fiberglass. Weight, tensile strength, and elastic modulus of that material changed less than 1 percent. However, the samples seemed to be slightly less opaque after exposure.

Viton A was considerably affected by the exposure. The material suffered a 28 percent decrease in tensile strength and a 7 percent increase in percent elongation. Its weight and volume increased 4 and 9 percent, respectively. Both the phenolic and epoxy circuit board materials, coated and uncoated, were also significantly affected. The coating lost adhesion, particularly over the copper comb patterns (Figures 5 and 6) and insulation resistance of all the specimens degraded below the specification minimum of 4 by 10^{10} ohms.

Of the encapsulating resins tested, anhydride cured Epon 826 was affected greatest by exposure to the liquid sterilant. Its insulation resistance decreased almost five orders of magnitude, and dissipation factor increased 96 percent. Dielectric constant increased a small amount, from 3.58 to 3.76. Stycast 1090 and amine cured Epon 826 both suffered very small changes in these properties.

The Cannon DPZ printed circuit connectors were not deleteriously affected by the exposure. Dielectric strength, insulation resistance, and contact voltage drop all remained within the specification requirements after sterilant exposure. However, while the connectors were wet with the liquid sterilant, their electrical properties degraded significantly. During the dielectric strength test on the contacts, leakage generally began when the voltage reached 900, and continued for a period of from 7 seconds to throughout the 1 minute test in which the maximum applied voltage was 1800. Leakage did not occur between the shroud and adjacent contact rows of any of the connectors. Insulation resistance measurements of each connector, made between each contact and its adjacent contacts and between the polarizing shroud and each adjacent contact, resulted in readings between 20 and 100 meghohms when the connectors were wet with formaldehyde-methanol. These values are considerably below the specification minimum of 5000 mehohms. Contact voltage of the connectors was not significantly changed by the treatment.

TABLE 10. COMPATIBILITY OF MATERIALS AND COMPONENTS WITH 5 PERCENT FORMALDEHYDE-METHANOL AFTER 4 WEEKS EXPOSURE AT ROOM TEMPERATURE

Specimen	Results*	Remarks
MIL-A-8625, Type I, anodized aluminum	+	
Molybdenum disulfide lubricant on MIL-A-8625, Type I, anodized aluminum	+	
MIL-P-997 silicone fiberglass	+	
Viton A elastomer, linear 8251-70	Limited compatibility	Tensile strength decreased 28 percent Volume swell 9 percent
HMS 16-1085 circuit board	-	Insulation resistance decreased from 9×10^5 megohms to 1×10^3 megohms
HMS 16-1085 circuit board with HP16-66 coating	-	Insulation resistance decreased from 1×10^6 megohms to 1.6×10^2 megohms
HMS 16-1026 circuit board with HP16-66 coating	-	Insulation resistance decreased from 9×10^5 megohms to 2×10^2 megohms
Stycast 1090 encapsulating resin	+	
Epon 826, amine cured, encapsulating resin	+	
Epon 826, anhydride cured, encapsulating resin	-	Insulation resistance decreased from 3×10^{13} ohms to 8×10^8 ohms
HAC Spec X988200 printed circuit connectors	+	Electrical properties are degraded while connectors are wet with sterilant; properties return to normal after drying.

* + = compatible
\- = not compatible

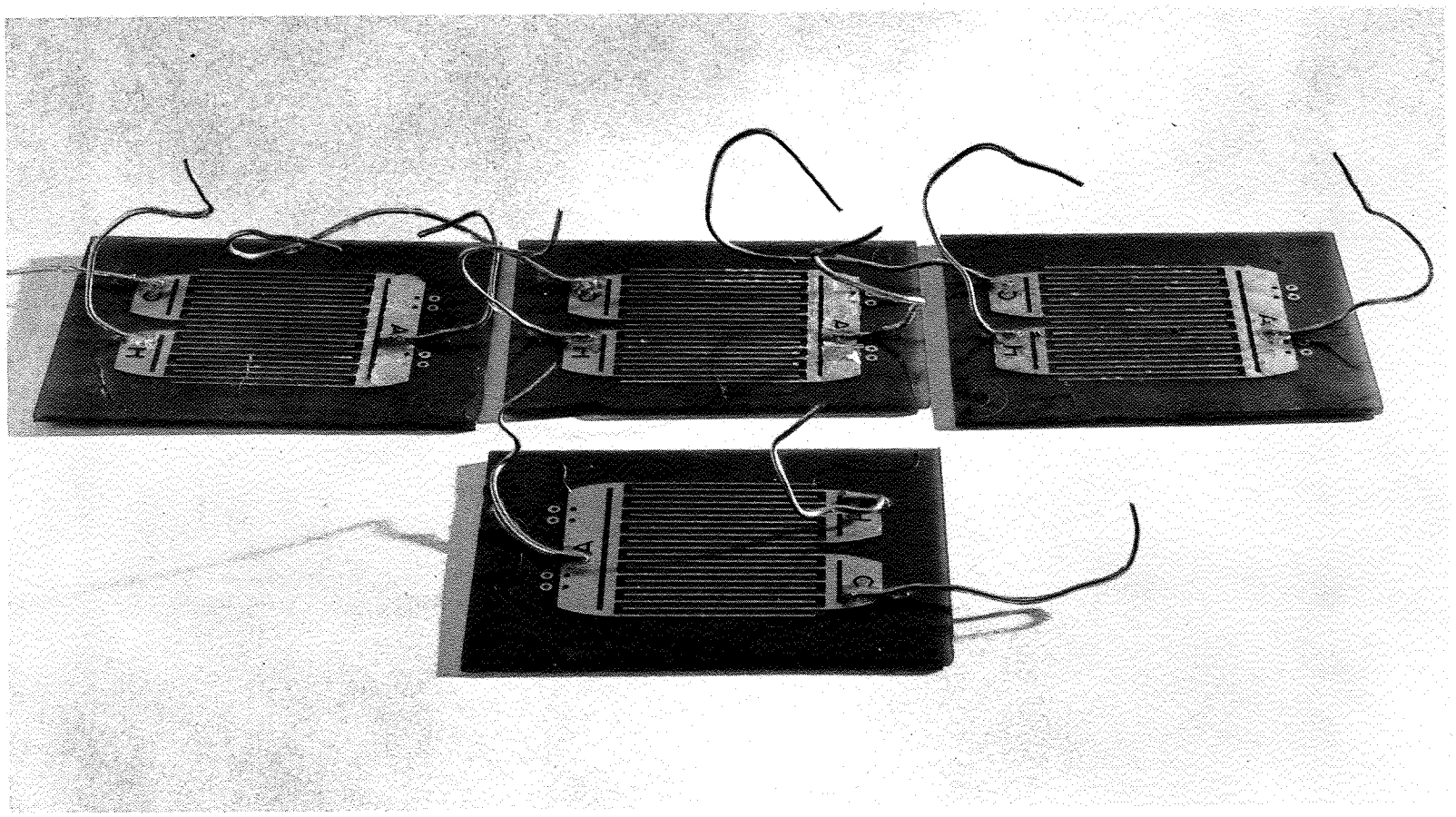

Figure 5. HMS16-1026 Phenolic Circuit Boards Coated with HP16-66 Exposed to Formaldehyde-Methanol

Exposure at room temperature for 4 weeks.

Sample at bottom center not exposed.

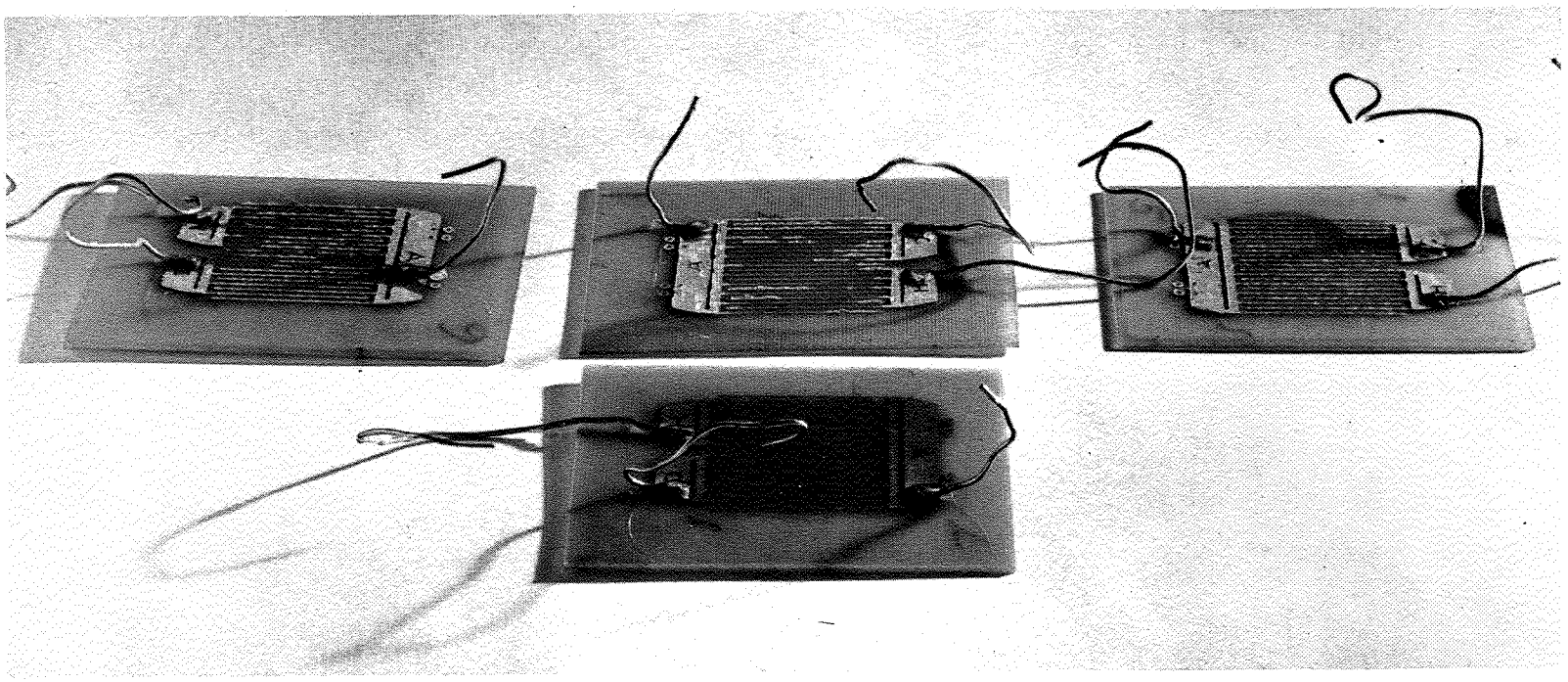

Figure 6. HMS 16-1085 Epoxy Glass Circuit Boards Exposed to Formaldehyde-Methanol Exposure at room temperature for 4 weeks.
Sample at bottom center not exposed.

Conclusions

A 3.6-percent amount of formaldehyde in anhydrous methanol was found to be compatible with anodized aluminum, molybdenum disulfide coating on anodized aluminum, MIL-P-997 silicone fiberglass, Stycast 1090, and amine-cured Epon 826 when these materials were exposed for 4 weeks to the liquid and vapors of the sterilant mixture. The sterilant was not compatible with HM16-1085 epoxy glass circuit board material, plain and coated with HP16-66, HMS16-1026 paper base phenolic circuit board material coated with HP16-66, or anhydride-cured Epon 826 encapsulating resin, all of which suffered deterioration in electrical properties.

Exposure to the liquid sterilant caused a 28-percent decrease in tensile strength of Viton A, but it is probably suitable for limited contact with this material.

The sterilant was found to be compatible with Hughes specification X988200 printed circuit connectors unless the connectors were used electrically while still wet with the formaldehyde-methanol solution.

3. STERILE TECHNIQUE

Items whose interiors were to be sterilized by means other than heat were studied to determine sterilization techniques that would be both reliable in achieving sterility and compatible with the general sterilization scheme for the Surveyor. These studies included the determination of the penetration of ethylene oxide through small openings and through coatings and the evaluation of self-sterilizing formulations. The sterilizing properties of candidate liquid and grease sterilants were also evaluated.

BIOLOGICAL EVALUATION STUDIES

Thermally Controlled Compartment Gas Penetration Studies

The thermally controlled compartments on the Surveyor consist of subsystems enclosed in a double cover that is lined with 100 sheets of aluminized mylar. During installation the aluminized mylar sheets lining the top of the cover are interleaved with the sheets lining the sides of the cover. An aluminum ribbon is then secured around the interface between the top and side cover, thus sealing the compartment except for slits resulting from the mosaic construction of the top cover. About eight hours are required to complete the installation.

The compartment covers cannot be installed until heat sterilization and system tests have been completed for two reasons:

1) There are subsystems in the compartments which cannot withstand the heat sterilization temperature.

2) The interiors of the compartments must be accessible for system tests.

This necessitated a study of sterilization techniques to assure successful decontamination of the aluminized mylar sheets and the interior surfaces of the compartments. A scaled-down mockup of a compartment cover was built and tests were conducted to determine whether ethylene oxide — Freon 12 gas sterilant would diffuse through the slits in the compartment top to sterilize the interior within the 11 hour exposure period chosen for terminal sterilization.

Procedure

Assembly of Compartment Mockup. The bottom and sides of an 8 inch by 12 inch perforated aluminum box were covered with 100 sheets of aluminized mylar. Each sheet was folded and secured with mylar tape to fit the contour of the box. Paper strips containing 10^6 spores of Bacillus subtilis var. globigii each, enclosed in sealed envelopes,* were placed on sheet layers number 1, 25, 50, 75, and 99. They were located on the bottom of the box and at various levels along two sides of the box as the sheets were installed. The actual positions of the strips on the sheets are recorded in Tables 11 and 12. Two spore strips were placed inside the box. Then 100 sheets of aluminized mylar having 4 circular cutouts were placed on the top of the box while spore strips were installed on layers 1, 25, 50, 75, and 99. A total of 28 spore strips were used in the box. The flaps of the top sheets were interleaved with the side flaps and the lined box was placed inside another box of solid sheet aluminum. A top in which slits were cut was placed on the box and the edges sealed with Scotch electrical tape number 33. The finished double box measured 9-7/8 inches by 14 inches. Photographs of the box at various stages of assembly are shown in Figures 7, 8, and 9.

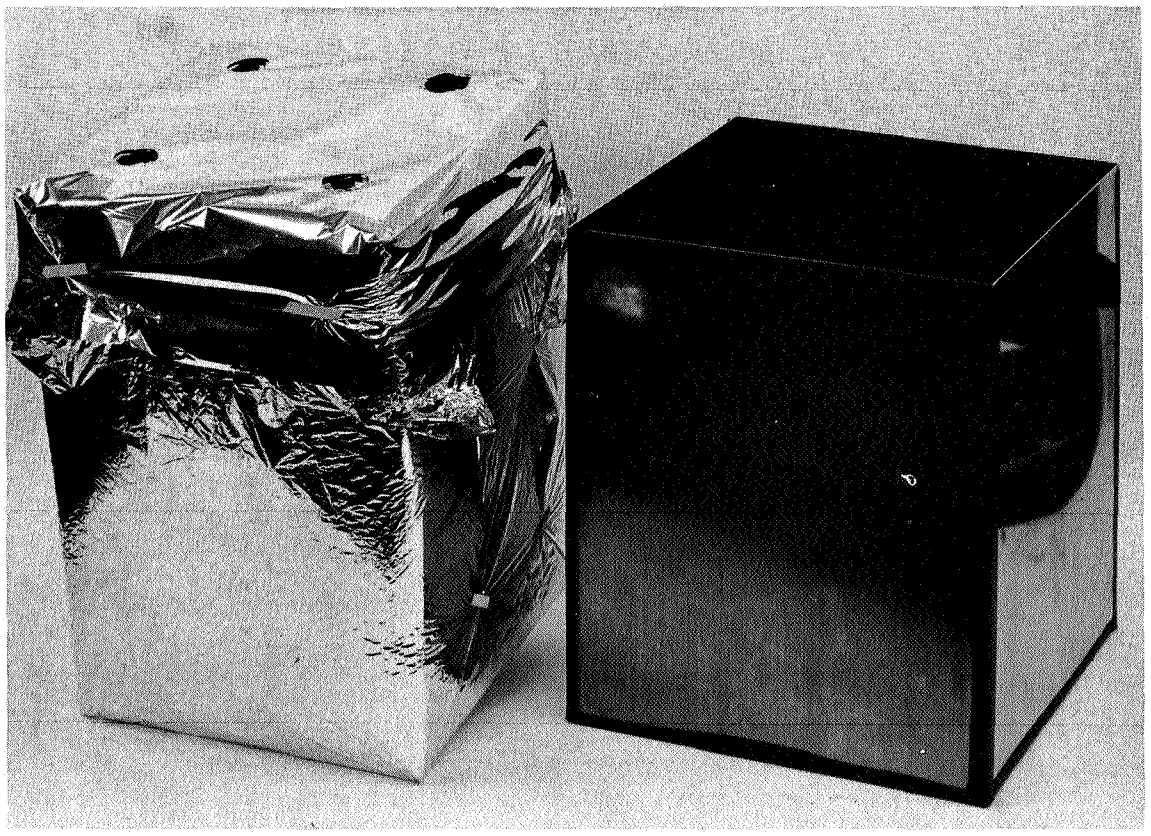

Figure 7. Thermally Controlled Compartment Mockup Inner Box Lined with Aluminized Mylar

*Supplied by American Stèrilizer Company.

TABLE 11. STERILIZATION OF COMPARTMENT COVER MOCKUP PROCEDURE I

Spore Strip			Viability after 14 days Incubation at 37°C
Side*	Sheet No.	Position From Bottom of Inner Box, inches	
B(R)	1		Negative
B(R)	50		Negative
B(R)	75		Negative
B(R)	99		Negative
T	1		Negative
T	25		Negative
T	50		Negative
T	75		Negative
T	99		Negative
R	1	12	Negative
R	25	12	Negative
R	25	6	Negative
R	50	6	Negative
R	75	12	Negative
R	99	6	Negative
L	1	0	Negative
L	1	4	Negative
L	1	12	Negative
L	25	4	Negative
L	25	0	Negative
L	50	0	Negative
L	50	12	Negative
L	75	4	Negative
L	75	0	Negative
L	99	0	Negative
L	99	12	Negative
Inside box, right side			Negative
Inside box, left side			Negative
Positive control			Positive (abundant growth in 24 hours)
Negative control 1			Negative
2			Negative
Media control			Negative

*B - bottom
T - top
R - right side
L - left side

TABLE 12. STERILIZATION OF COMPARTMENT COVER MOCKUP PROCEDURE II

Spore Strip			Viability After 14 days Incubation at 37°C		
Side*	Sheet No.	Position from bottom of box, inches	Test I	Test II	Test III
B(R)	1		Negative	Negative	Negative
B(R)	50		Negative	Negative	Negative
B(R)	75		Negative	Negative	Negative
B(R)	99		Negative	Negative	Negative
T	1		Negative	Negative	Negative
T	25		Negative	Negative	Negative
T	50		Negative	Negative	Negative
T	75		Negative	Negative	Negative
T	99		Negative	Negative	Negative
R	1	12	Growth in 72 hours, anaerobic	Negative	Negative
R	25	12	Negative	Negative	Negative
R	25	6	Negative	Negative	Negative
R	50	6	Negative	Negative	Negative
R	75	12	Negative	Negative	Negative
R	99	6	Negative	Negative	Negative
L	1	0	Negative	Negative	Negative
L	1	4	Growth in 72 hours, anaerobic	Negative	Negative
L	1	12	Negative	Negative	Negative
L	25	4	Positive	Negative	Negative
L	25	0	Negative	Negative	Negative
L	50	0	Negative	Negative	Negative
L	50	12	Negative	Negative	Negative
L	75	4	Negative	Negative	Negative
L	75	0	Negative	Negative	Negative
L	99	0	Negative	Negative	Negative
L	99	12	Growth in 72 hours, anaerobic	Negative	Negative
Inside box, right side			Negative	Negative	Negative
Inside box, left side			Negative	Negative	Negative
Positive control			Positive	Positive	Positive
Negative control, 1			Negative	Negative	Negative
2			Negative	Negative	Negative
Media control			Negative	Negative	Negative

*B - bottom
T - top
R - right side
L - left side

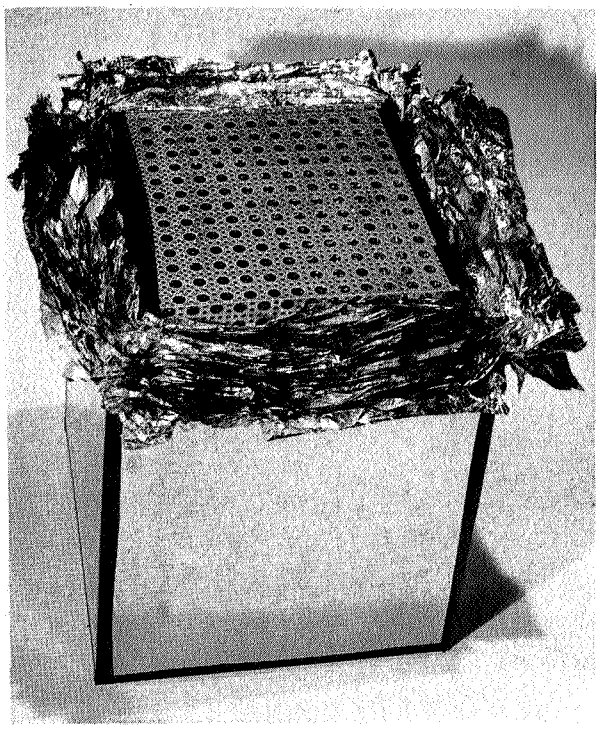

Figure 8. Thermally Controlled Compartment Mockup Aluminized Mylar Lined Box Inside Outer Box

Top sheets of aluminized mylar removed.

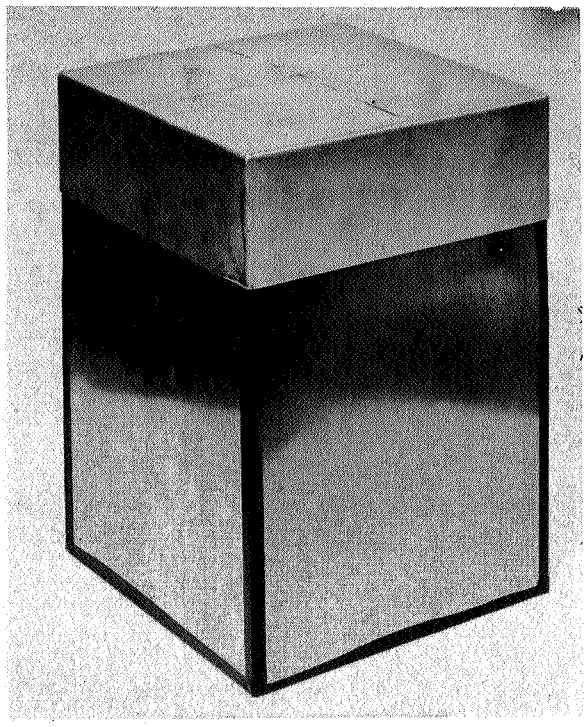

Figure 9. Thermally Controlled Compartment Mockup Finished Double Box

Sterilization Test Number 1. The glove box pictured in Figure 10 was used to expose the compartment cover mockup to the gas sterilant. The mockup was placed in the antechamber of the glove box along with two viable spore strips (negative controls). Two to three grams of water were put in the antechamber to provide the required relative humidity of 30 percent to 50 percent, and the antechamber was sealed.† Internal pressure was reduced to 10.2 Torr and maintained for 30 minutes.* 12 percent ethylene oxide — 88 percent Freon 12 gas mixture** was then allowed to fill the antechamber and flushed through for 20 minutes to replace all of the air. The mockup was exposed to the sterilant atmosphere for 11 hours.

After flushing the antechamber with air for 35 minutes the mockup was removed, disassembled, and the spore strips recovered. The strips were aseptically removed from the envelopes, placed in tubes of sterile

†Quantity of water needed determined by calculation.
*Previous testing had determined that 30 minutes at reduced pressure was required to reduce the air pressure in the compartment cover mockup.
**Supplied by the Matheson Gas Company.

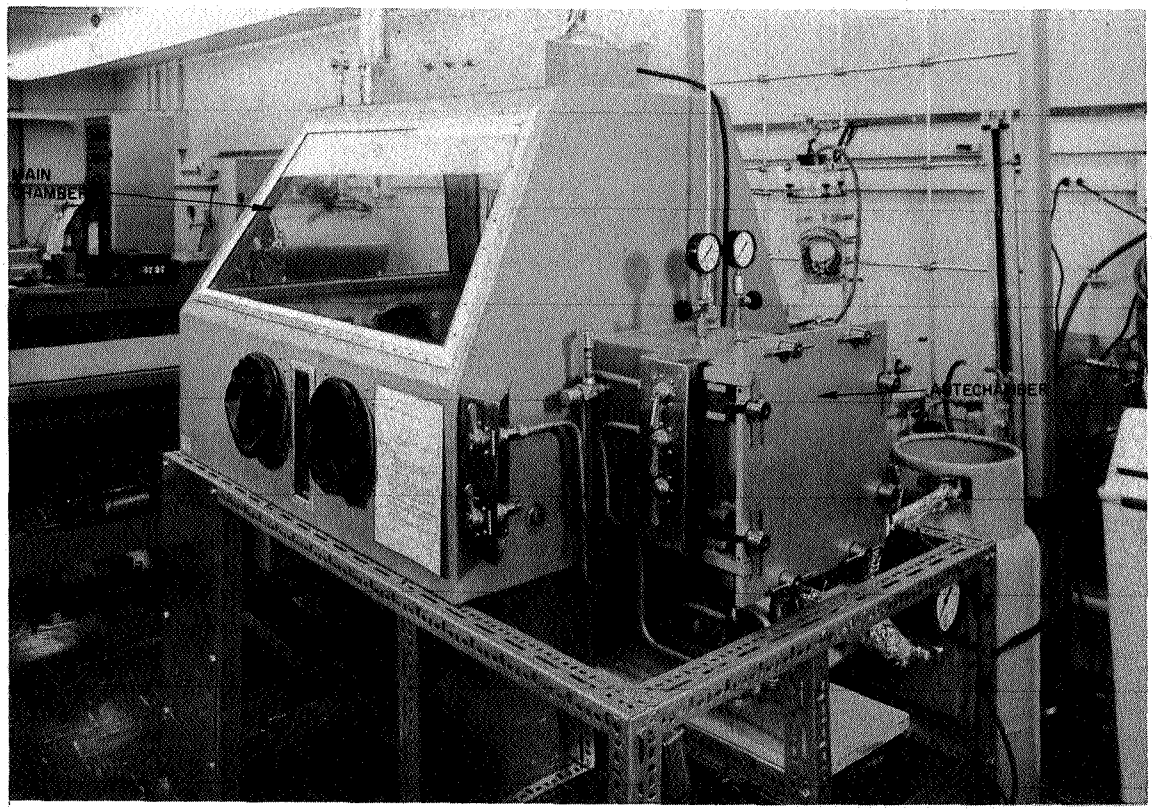

Figure 10. Glove Box

thioglycollate broth, and incubated at 37°C for 14 days along with a positive control (unexposed spore strip) and negative controls (uninoculated media and spore strips from antechamber). Cultures were checked daily for growth.

Sterilization Test Number 2. The assembled compartment mockup was also exposed to ethylene oxide — Freon 12 for 11 hours in the main chamber of the glove box without prior reduction in pressure. In this test the chamber was filled with gas by flushing for 35 minutes. During the exposure period the gas was sampled and analyzed to assure correct concentration.

At the conclusion of the exposure the mockup was again removed, disassembled, and the spore strips cultured in thioglycollate medium.

This test was repeated three times.

Results

Tables 11 and 12 report the results of viability tests on the spore strips used in the sterilization tests.

Following the first test procedure in which the pressure was reduced before admitting the gas sterilant, sterility of all 28 spore strips was produced (2.8 by 10^7 spores total). This was expected since the initial pressure in the chamber was low enough for sufficient ethylene oxide to penetrate the box.

The second procedure actually tested the ability of ethylene oxide to diffuse into the box. This procedure was more compatible with the sterilization plan since it is doubtful whether the pressure can be reduced in the Surveyor flight shroud. Using this procedure sterilization of all spore strips was accomplished in two of the three tests. In the third test one spore strip remained viable. Growth occurred in three other culture tubes (R-1-12, L-1-4, L-99-12) but these were confirmed as anaerobic contaminants.

Conclusions

Exposure to 12 percent ethylene oxide — 88 percent Freon 12 for 11 hours at 30 to 50 percent relative humidity, with or without reducing the ambient pressure before filling the chamber with sterilant gas, was found to sterilize the compartment cover mockup. One spore strip out of 28 remained viable in one exposure test. However, the overwhelming number of spores that were killed justify concluding that the actual compartment linings and interiors will be sterilized by the gas since the number of spores used in these tests greatly exceed the expected contamination of the compartments.

Inertial Reference Unit Aseptic Assembly Study

Ethylene Oxide Penetration Evaluation

The inertial reference unit was to be rendered sterile by a combination of heat sterilization and aseptic assembly in a sterile atmosphere. After this process the gyros were to be aligned in a nonsterile atmosphere. Alignment involves loosening tabs that secure the gyros in the wells of the mounting block, rotating the gyros slightly until they are aligned, then retightening the tabs. It was possible that during this process the tabs would rotate and carry microbiological contaminants between them and the mounting block. Therefore a study was conducted to determine whether ethylene oxide — Freon 12 gas sterilant would penetrate into and sterilize possible contaminated areas.

A photograph of an inertial reference unit mockup and an exploded view of the parts which were used in this study are presented in Figures 11 and 12. These parts consist of a mounting block with three wells in which the gyros are placed. Each gyro is supported on a bearing surface in the well and secured by three tabs.

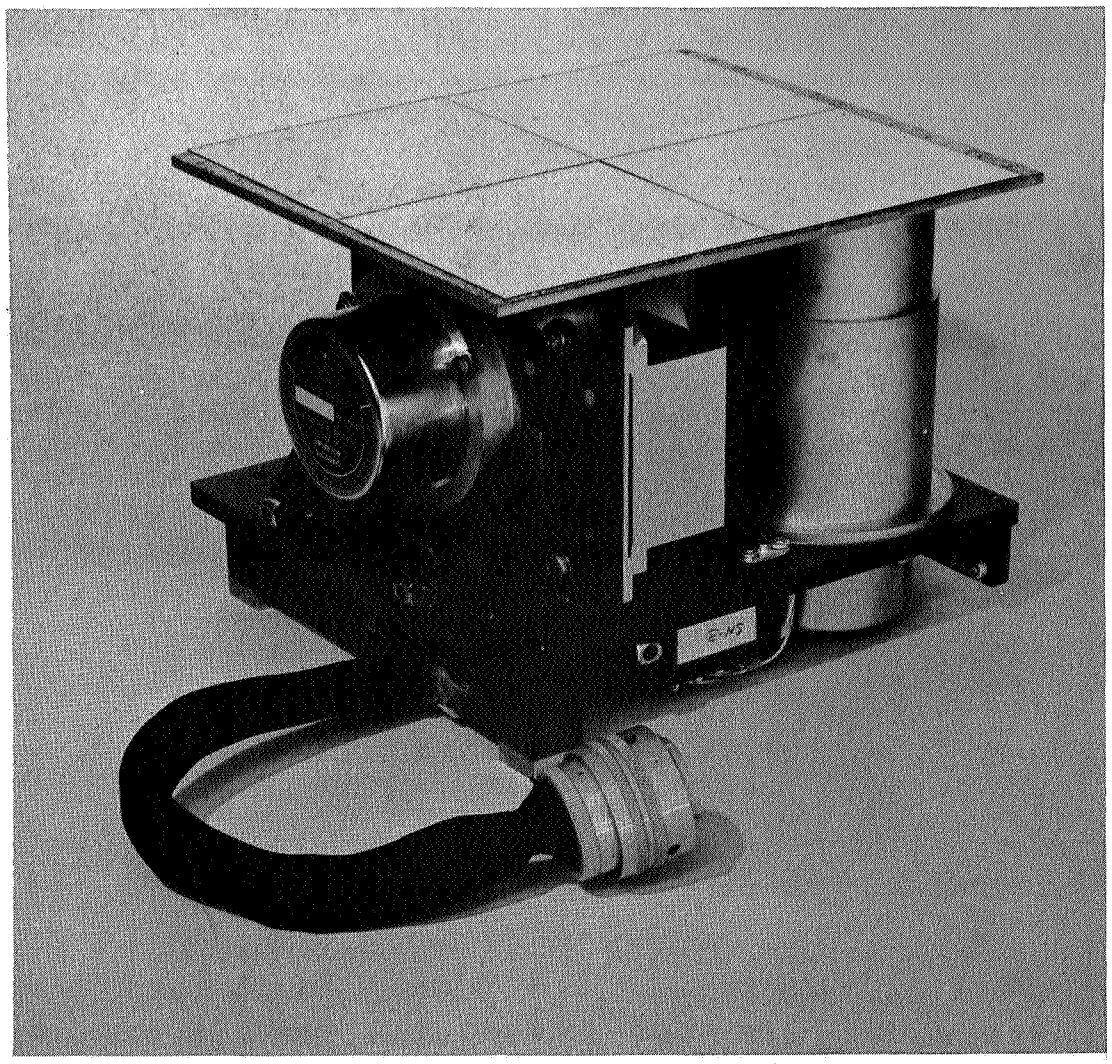

Figure 11. Inertial Reference Unit Mockup

Sterilization Test. The surfaces between the tabs and mounting block, and between the gyro and well bearings were contaminated with a known population of spores of Bacillus subtilis var. niger.

The tabs were flame-sterilized and aseptically placed in sterile petri dishes. Each tab was then inoculated with two drops of a stock spore suspension of Bacillus subtilis, containing 10^8 spores per milliliter, and allowed to dry. The gyro mounting block, gyros, screws and washers were put in the glove box (Figure 10) and sterilized with 12 percent ethylene oxide — 88 percent Freon 12. Each well bearing was then inoculated in the sterile glove box with 0.2 milliliter of 10^8 spores per milliliter stock spore

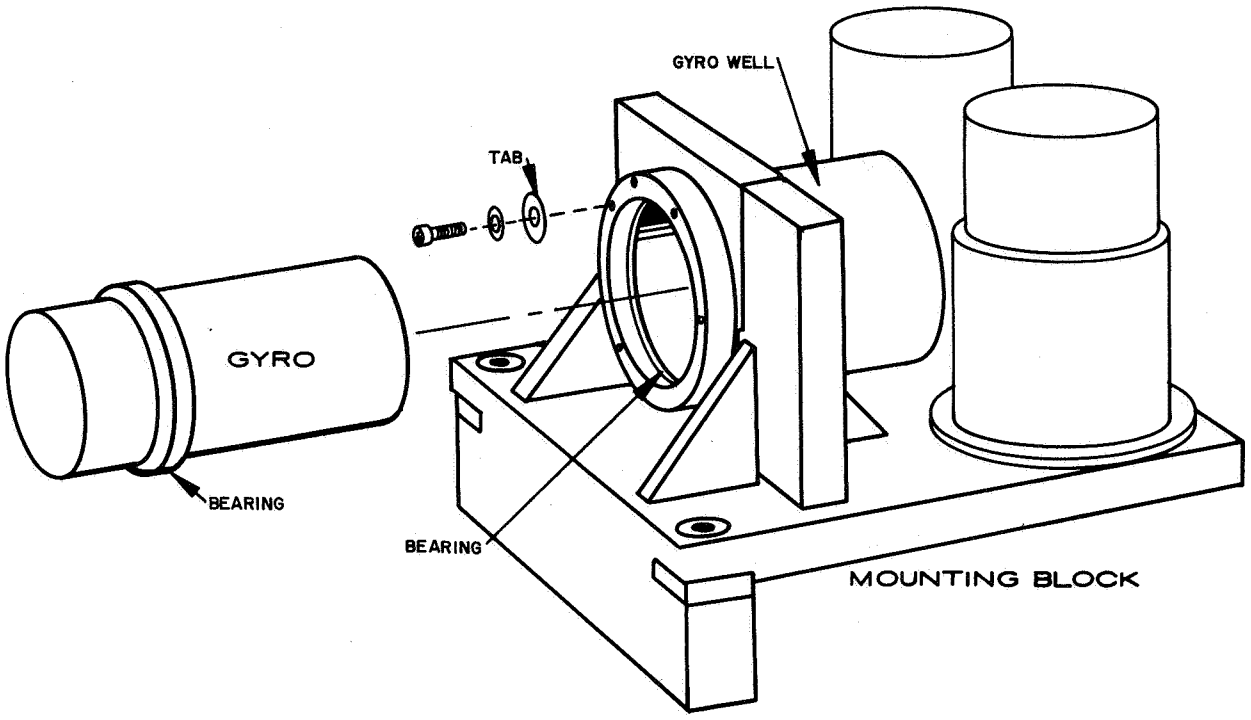

Figure 12. Inertial Reference Unit Mockup Exploded View of Parts Used for Sterilization Studies

suspension and allowed to dry. The gyros were placed in the wells and the inoculated tabs were installed.

The contaminated assembled inertial reference unit mockup was then exposed in the glove box to 12 percent ethylene oxide and 88 percent Freon 12 at 30 to 50 percent relative humidity and ambient pressure for 11 hours. At the end of this period the glove box was flushed with sterile air (sterilized by passing through 0.45 micron millipore filter). The gyros were disassembled in the sterile glove box and the three tabs and screws from each gyro mount were placed in a culture tube containing 10 milliliters of sterile thioglycollate broth. Each well and matching gyro bearing was swabbed with two sterile cotton applicators which were then placed in 10 milliliters of sterile thioglycollate broth.

The number of spores surviving the exposure were determined by making suitable dilutions from the thioglycollate suspensions in sterile distilled water and preparing pour plates on tryptone glucose extract agar with aliquots of the dilutions. The colonies formed after incubating at 37°C for 48 hours were counted with the aid of a Spencer colony counter.

The remaining thioglycollate suspensions were also incubated to determine population that may be too low to appear on the pour plates.

The number of spores that could be recovered from the contaminated assembled inertial reference unit was determined by repeating the inoculation, assembly, and disassembly procedure followed in the sterilization test, but omitting ethylene oxide — Freon 12 exposure.

Results. Populations of recoverable spores and spores remaining viable after gas sterilization exposure are presented in Table 13. The exposure was not able to sterilize the inertial reference unit assembly. The data show that ethylene oxide — Freon 12 was effective in reducing the original recoverable spore population of 10^6 by a factor of 1000 on the tabs and by a factor of over 10^5 on the well-bearing surfaces.

TABLE 13. STERILIZATION OF INERTIAL REFERENCE UNIT WITH 12 PERCENT ETHYLENE OXIDE — 88 PERCENT FREON 12

Specimens	Spore Population After 48 Hours Incubation at 37°C (Colonies by Dilution Factor) x10	x10^2	x10^4	Appearance of Thioglycollate Culture
Spore recovery test				
Tabs G-1	**	**	124	
G-2	**	**	145	
G-3	**	**	113	
Well W_{G_1}	**	**	247	
W_{G_2}	**	**	302	
W_{G_3}	**	**	165	
IRU exposed to ETO - Freon 12				
Tabs G-1	300	38	0	Growth
G-2	419	36	0	Growth
G-3	26	1	0	Growth
Well W_{G_1}	0	0	0	No growth
W_{G_2}	1	0	0	Slight growth
W_{G_3}	1	0	0	Growth

**Too numerous to count.

Evaluation of Self-Sterilizing Properties of IRU Encapsulating Resin

The self-sterilizing properties of an encapsulating resin were also investigated as part of the development of aseptic assembly procedures for the inertial reference unit. The gyros for the unit are heat-sterilizable but require calibration after the heating process. This involves changing external electronic components. For vibration reasons these components must then be encapsulated. Since this area could not be heat-sterilized, a self-sterilizing encapsulating resin was sought.

The encapsulating compound studied was Eccofoam PT syntactic foam (epoxy with amine curing agent), manufactured by Emerson and Cuming Corporation. The microorganisms used to test the sterilizing properties of the resin were spores of Bacillus subtilis, adsorbed on diatomaceous earth, having a viable count of 10^{12} spores per gram.

Procedure. Three grams of resin component B (curing agent) were weighed in a sterile four ounce screw-capped glass jar and seeded with 0.0007 gram of Bacillus subtilis spore mixture (~ 7×10^8 spores). Six 0.7 gram samples of resin component A were weighed in sterile 2 ounce screw-capped glass jars. 0.3 gram of seeded B component was added to each of four of the component A samples* and 0.3 gram of unseeded B component was added to each of the remaining two component A samples. All samples were mixed well and two of each were set aside for 2-1/2 hours.

Thirty milliliters of acetone were added to one seeded sample and the same amount of sterile water was added to another sample immediately after the two components of the sample were mixed. Four 1 milliliter aliquots were removed from each sample and added to test tubes containing 9 milliliter sterile water. The tubes were serially diluted and aliquots plated with Bacto tryptone glucose agar. Colony counts were made after incubating the agar plates for 48 hours at 37°C.

After the seeded samples had been set aside for 2-1/2 hours the procedure described above was followed.

This procedure was again followed after the unseeded samples had set for 2-1/2 hours, except that 10^3 spores of Bacillus subtilis were added to each dilution before plating.

Spore recovery data for the test specimens and spore recovery specimens are presented in Table 14. It can be seen from the data that water was better than acetone for recovering the spores from the resin specimens. The spore recovery from water of 2.6 by 10^7 spores was reasonably close to the number of spores originally added -- 7 by 10^7. No significant differences were noted in the population of spores from the spore recovery controls and from the test specimens.

*Each seeded sample therefore contained ~ 7×10^7 spores of Bacillus subtilis.

TABLE 14. SELF-STERILIZATION TEST OF ECCOFOAM PT

Specimens		Spore Population After 48 Hours Incubation at 37°C (colonies x dilution factor) X300	X3000	X3 x 10^5
Spore recovery specimens (controls)				
Acetone recovery	1	**	438	4
	2	**	646	20
	3	**	**	23
	4	**	**	26
	Average			5.4 x 10^6
Water recovery	1	**	**	87
	2	**	**	94
	3	**	**	90
	4	**	**	74
	Average			2.6 x 10^7
Test Specimens				
Acetone recovery	1	**	822	18
	2	**	889	14
	3	**	619	27
	4	**	**	5
	Average			4.8 x 10^6
Water recovery	1	**	**	99
	2	**	**	77
	3	**	**	92
	4	**	**	72
	Average			2.6 x 10^7

**Too numerous to count

Data obtained from the spore inhibition test are reported in Table 15. This control test was conducted to determine whether the presence of resin in the plated aliquots had any effect on the growth of spores on the agar plates. The data show that the resin had no bacteriostatic effect on the spores in any of the dilutions plated. However, a small amount of inhibition due to the presence of the acetone was observed.

Eccofoam PT encapsulating resin showed no evidence of sporocidal properties when spores of Bacillus subtilis were exposed to it for 2-1/2 hours. It is possible that the resin may have some effect on the viability of the spores if a longer exposure period is used. No attempt was made to test this as the sterilization program was discontinued.

TABLE 15. SPORE INHIBITION TEST OF ECCOFOAM PT (CONTROL)

Specimens	Spore Population After 48 Hours Incubation at 37°C
Original population: 1.3×10^3	
Acetone Recovery	
Resin dilution*	
1	1220
2	1260
3	1010
Water recovery	
Resin dilution*	
1	1440
2	1320
3	1430

*The resin dilutions 1, 2, and 3 correspond to dilutions having the same amount of resin as present in the test specimen dilutions plated which had dilution factors of 300, 3000, and 3×10^5 respectively.

Grease Sterilant Evaluation

A grease sterilant composed of paraformaldehyde dissolved in a Dow Corning silicone grease was developed by Dynamic Science Corporation for use in applications that require a material having a continuous sterilizing action.

It was the purpose of this investigation to evaluate the grease as to its effectiveness in sterilizing objects contaminated with 10^5 to 10^6 bacterial spores.

Test specimens consisted of aluminum and glass coupons, 1.5 inches by 0.4 inch, and glass discs with an 0.25 inch diameter. Aluminum coupons were chosen to simulate flat surfaces that must be sterilized and mated. Glass coupons were used to determine whether or not the nature of the surface material had an effect on the action of the grease sterilant. Glass discs were used to duplicate tests conducted on the grease by Dynamic Science Corporation. Samples of grease from two batches were used.

J. B. Opfell et al., "Evaluation of Liquid Sterilants Phase III, IV, V, VI, and VII," "Semifinal Report on JPL Contract No. N2-150247, Dynamic Science Corp., 16 March 1962.

The specimens were prepared by steam sterilizing them in petri dishes and aseptically inoculating each with approximately 10^6 spores of Bacillus subtilis suspended in water.

After the inoculum had dried, grease sterilant was applied to the inoculated surface with a syringe and lightly spread over the surface with a sterile spatula. The aluminum and glass coupons were then aseptically covered with sterile mating aluminum and glass coupons pressed down to spread the grease evenly between the two surfaces. The mated coupons in petri dishes were then set aside for four days. After applying the grease, each glass disc was aseptically placed in a sterile 2 ounce glass jar. The cap was screwed on and the jar set aside for either 24 hours or 4 days.

At the end of the exposure period, each specimen was aseptically placed in 10 milliliters of acetone and vibrated ultrasonically to dissolve the grease. Serial dilutions were made in water, and pour plates of aliquots of the suspensions were made using Bacto tryptone glucose agar. The plates were incubated at 37°C and colony counts were made every 24 to 48 hours for 14 days.

In the spore recovery test the procedure described in the sterilization test was followed except that the spores were recovered immediately after applying the grease.

Plate counts of samples treated with the grease sterilant are tabulated in Tables 16, 17, and 18. Results varied from test to test in the number of spores recovered from the controls and from the test specimens with all three types of specimens. In the first test on aluminum coupons, viable spores recovered from the test specimens were reduced less than one order of magnitude (from 1.7 by 10^5 (control) to ~ 7 by 10^4) (Table 16) by exposure to the grease sterilant. In the two subsequent tests no viable organisms were recovered from the test specimens. In these two tests spore recoveries from the controls were also lower (7 by 10^4 and 2 by 10^4).

Tests on the glass coupons produced similar results (Table 17). In test I recoverable viable spores were apparently reduced by the grease exposure from 9×10^4 (controls) to 1.8×10^3. In test II they were reduced to 1×10^2. In tests III and IV population of spores recovered from both the controls and the test specimens was low. Only 10^4 viable spores, from an original population of 10^6, were recovered from the controls. Apparent sterilization was achieved on all of the test specimens of these two tests except three. Eighty, 50, and 260 viable spores were recovered from these.

Tests on the glass discs also produced results with poor repeatability, but with less divergence than the aluminum and glass coupon results. Two tests were conducted in which glass discs were exposed to the grease for 24 hours and 4 days. Since the 24-hour tests demonstrated inability of the grease to sterilize within this time, this exposure period was omitted from tests III and IV. (Table 18).

TABLE 16. STERILIZATION TEST OF PARAFORMALDEHYDE-GREASE ON ALUMINUM COUPONS

Original Population: 1.2×10^6

Specimens	Plate Counts (Population = Colonies X Dilution Factor)		
	X10	$X10^2$	$X10^4$
Test I (batch GS5PF)*			
Spore recovery control			
1	--	---	18
			22
2	--	---	14
			15
Average			17
Test specimens			
1	**	~ 368	4
2	**	~ 281	2
3	**	~ 691	15
Average		~ 447	7
Test II (batch GS5PF)*			
Spore recovery control			
1	--	~ 541	7
2	--	~ 322	9
3	--	---	5
Average		~ 432	7
Test specimens			
1	0	0	0
2	0	0	0
3	0	0	0
4	0	0	0
Average	0	0	0
Test III (batch S4C5F)*			
Spore recovery control			
1	--	---	1
2	--	~ 355	0
3	--	---	5
Average	--	---	2
Test specimens			
1	0	---	--
2	0	---	--
3	0	---	--
4	0	---	--
5	0	---	--
Average	0	---	--

*Designation of batch of grease used.
**Too numerous to count.

TABLE 17. STERILIZATION TEST OF PARAFORMALDEHYDE-GREASE ON GLASS COUPONS

Original Population: 1.2×10^6

Specimens	Plate Counts (Population = Colonies X Dilution Factor)		
	X10	$X10^2$	$X10^4$
Test I (batch GS5PF)*			
Spore recovery control			
1	--	**	12
2	--	**	6
Average	--	**	9
Test specimens			
1	266	15	0
2	75	17	0
3	245	21	0
Average	195	18	0
Test II (batch GS5PF)*			
Test specimens			
4	0	0	0
5	28	3	0
6	18	1	0
Average	15	1	0
Test III (batch GS5PF)*			
Spore recovery control			
1	--	~ 416	1
2	--	~ 116	0
3	--	~ 413	7
Average	--	~ 315	3
Test specimens			
1	0	0	0
2	8	1	0
3	0	0	0
4	0	0	0
Test IV (batch S4C5F)*			
Spore recovery control			
1	--	--	1
2	--	--	3
3	--	--	1
Average	--	--	2
Test specimens			
1	5	--	--
2	26	--	--
3	0	--	--
4	0	--	--
5	0	--	--

*Designation of batch of grease used.
**Too numerous to count

TABLE 18. STERILIZATION TEST OF PARAFORMALDEHYDE-GREASE ON GLASS DISCS

Original Population: 3.9×10^5

Specimens	Plate Counts (Population = Colonies X Dilution Factor)		
	X10	$X10^2$	$X10^4$
Test I (batch GS5PF)*			
Spore recovery control			
1	--	***	9
2	--	***	11
3	--	***	8
Average	--	--	9
24-Hour sterilization test			
1	~ 169	6	0
2	7	0	0
3	~ 138	10	0
Average	~ 105	5	
4-Day sterilization test			
1	0	0	0
2	~ 527	18	1
3	2	1	0
Test II (batch GS5PF)*			
24-Hour sterilization test			
1	***	198	5
2	***	216	2
4-Day sterilization test			
1	0	0	0
2	1	0	0
3	34**	1	0
Test III (batch GS5PF)*			
Spore recovery control		~225	3
4-Day sterilization test			
1	32	3	0
2	11	0	0
3	0	0	0
4	9	0	0
Test IV (batch S4C5F)*			
Spore recovery control			
1	--	--	0
2	--	~444	1
3	--	--	2
4-Day sterilization test			
1	138	--	--
2	406	--	--
3	36	--	--
4	320	--	--

*Designation of batch of grease used.
**This specimen contained an original population of $>3.9 \times 10^5$.
***Too numerous to count.

Spore recovery from the controls was poorest in test IV. Approximately 10^4 viable spores were recovered from an original population of 4×10^5.

None of the 4-day exposure tests on the glass discs resulted in total sterilization, but one out of three specimens of test I and II, and one of four specimens of test III were apparently sterilized. None of the four specimens of test IV was sterilized by the grease.

Possible reasons for these results may include the intimacy of contact of the grease with the surface to be sterilized and the amount of grease applied. Since the glass discs were not covered with mating discs, contact was probably not as good as with the other test specimens. Also, since the discs were smaller, not as much grease was applied. A smaller amount of grease was also applied in tests I on the aluminum and glass coupons than in subsequent tests, and the results on these tests showed more viable spores recovered than in the subsequent tests. Larger applications of grease may have affected the results in two ways -- by effecting more surface-grease contact, and by occluding spores and making recovery more difficult (although the grease was soluble in acetone, some of it came out of solution when aliquots of the solution were added to water or to the agar medium).

Tests on paraformaldehyde-silicone grease, developed by Dynamic Science Corporation, demonstrated that the grease would not sterilize objects that were exposed to it for 24 hours, but it did possess germicidal properties when allowed to remain on objects for four days. In the 4-day tests, however, complete sterilization was only accomplished on the aluminum coupons in two tests out of three on that material. Near sterilization was achieved in two of the four tests on glass coupons, but the grease failed to sterilize the glass discs. Results indicate that the grease may have more activity on aluminum than on glass surfaces.

Although the grease was shown to possess germicidal properties, it probably cannot be depended upon to sterilize parts unless very close control of the process is exercised.

Liquid Sterilant Evaluation

The use of liquid sterilants presented a critical area in the overall sterilization plan for the Surveyor. The many variables inherent in this process affect the reliability of sterilization. These variables include the method of application, exposure time, nature of the surface to be sterilized, micro-organism population, micro-organism type, concentration of the active ingredient, vehicle used, and stability of the mixture. Five percent formaldehyde in anhydrous methanol had been originally selected as the most promising candidate liquid sterilant. Initial tests using this mixture, however, indicated that difficulties in sterilizing might be experienced because of limited stability of the mixture and volatility of the vehicle. A test program was therefore set up to compare the sterilizing properties of

formaldehyde-methanol solutions with formaldehyde-water solutions as functions of age of the sterilant, exposure time, and surface conditions of the specimens to be sterilized. Micro-organism type and population were held constant. Short exposure times ranging between 1 and 24 hours were chosen so that differences in sterilizing abilities would be readily discernible.

The formaldehyde-water solutions consisted of 5 and 10 percent formaldehyde in water, prepared by diluting 37 percent formalin solution (Baker Analyzed Reagent).

The following formaldehyde-methanol solutions were evaluated:

1) 3.64 percent formaldehyde in anhydrous methanol, obtained from Dynamic Science Corp.

2) 4.65 percent formaldehyde in anhydrous methanol.

3) 7.50 percent formaldehyde in anhydrous methanol.

All solutions were assayed at the commencement of the test program according to the procedure described later on in this discussion.

Test specimens consisted of rough and smooth aluminum coupons, 2 inches by 1/2 inch by 1/16 inch, stainless steel screws, and stainless steel blocks containing five threaded holes. The smooth coupons were prepared by polishing with number 120C fine emery paper. The rough coupons were roughened with number 60C coarse emery paper.

The test organism used was a stock water suspension of spores of Bacillus subtilis var. niger.

Preparation of Formaldehyde in Methanol. Formaldehyde in anhydrous methanol was prepared by pyrolyzing highly polymerized polyoxymethylenes which contain less than one percent water, and absorbing the vapor formed in anhydrous methanol*.

The following procedure was used:

1) Preparation of alpha polyoxymethylene. Alpha polyoxymethylene, the most suitable polymer because of its low bound water and acid content, was prepared by the action of potassium hydroxide on an uninhibited aqueous solution of formalde.

   1500 grams (4 moles) paraformaldehyde and 1500 milliliters distilled water were heated to almost boiling and adjusted to pH

*J.B. Opfell, C.E. Miller, and A.L. Louderback, "Semi-Final Report: Evaluation of Liquid Sterilants, Phase III, IV, V, VI, and VII", Report No. R-4 of P-44b, Contract N2-150247(JPL), Dynamic Science Corp., 16 March 1962.

7 with dilute potassium hydroxide. Heating was continued for 3 hours, then the solution was filtered hot and allowed to cool. A solution of 2.25 grams (0.04 mole) potassium hydroxide in 50 milliliters water was added to the cold filtrate which was then stored 24 hours at approximately 10°C. The white precipitated alpha polyoxymethylene was separated by filtering, and washed until wash water was neutral. The precipitate was spread out in a thin layer, air-dried for 24 hours, and dried in a vacuum oven at 100°C, 29 in Hg, for 48 hours. This procedure yielded 325 grams (22 percent) of alpha polyoxymethylene.

2) Preparation of monomeric formaldehyde by pyrolysis and absorption in methanol.

The apparatus was thoroughly dried. A mixture of 85 grams alpha-polyoxymethylene, 9 grams P_2O_5 (to absorb water given off during pyrolysis) in 500 milliliters mineral oil was placed in a 2-liter three-neck flask. The flask was connected to a receiving flask by a heated tube as shown in Figure 13. Dry nitrogen was passed through the apparatus for about 30 minutes to flush out air (lower explosive limit for formaldehyde in air is 7 percent).

The oil mixture was heated to 160°C and vapors condensed in the collecting flask immersed in a dry ice-acetone bath. By visual inspection of the oil mixture, pyrolysis was complete in 30 minutes.

The formaldehyde in the collecting flask was vaporized slowly by gradually removing the dry ice-acetone bath and the vapor was carried into a flask containing 500 milliliters anhydrous methanol by the dry nitrogen gas at a flow rate of not more than 2.5 cc/min. The flask containing the methanol was cooled with a salt-ice slurry since the absorption of the formaldehyde in the methanol is moderately exothermic. This procedure yielded 500 milliliters formaldehyde methanol solution.

Assay of Formaldehyde in Methanol. The sodium sulfite method was employed for the quantitative analysis of formaldehyde. It is based on the following reaction: $HCHO\ (aq) + Na_2SO_3 + H_2O \rightarrow NaOH + Na\ (HCHO)\ SO_3$ (a slow reaction)

The procedure used is described below. An excess of a fresh one molar sodium sulfite solution was placed in an Arlenmeyer flask. The solution was then acidified with 1 molar HCl until a pH of 7 was attained. A known volume of formaldehyde sample was added and completely mixed. The mixture was allowed to stand 45 minutes, then titrated with 1 molar HCl to a pH of 7. The endpoint was determined with a pH meter. Formaldehyde concentration in the sample was calculated as follows:

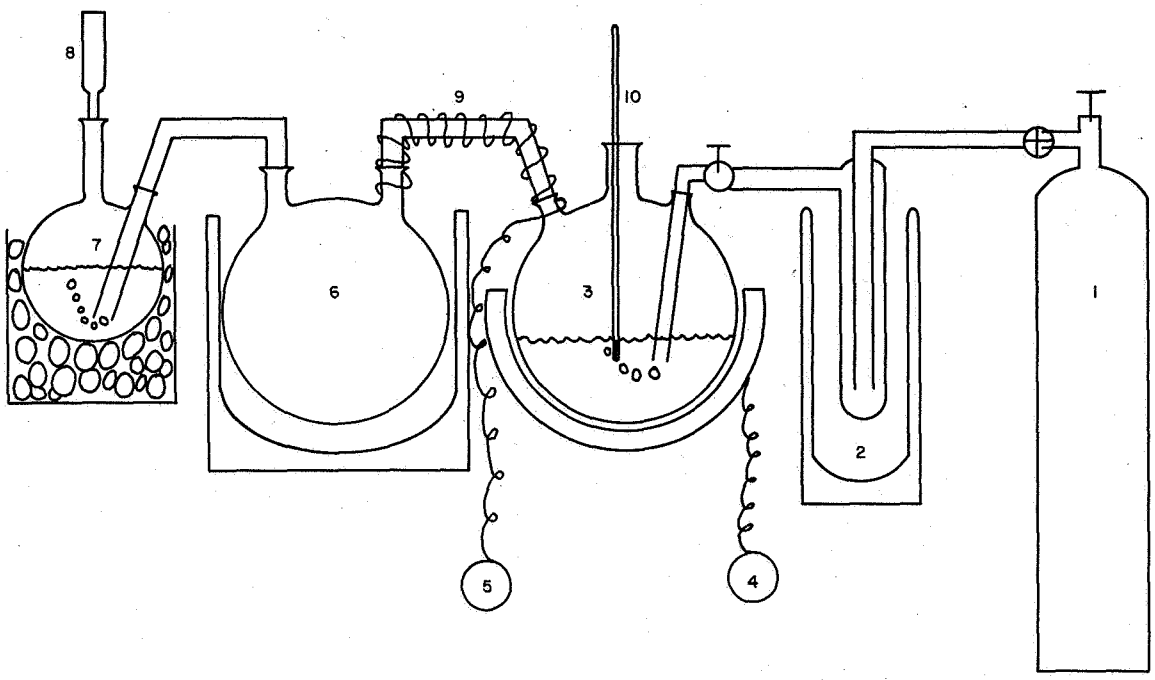

1. Oil pumped nitrogen
2. Liquid nitrogen trap for moisture
3. Pyrolysis flask with heating mantle
4. Powerstat for heating mantle
5. Powerstat for flexible heating strip
6. Formaldehyde collecting flask in dry ice-acetone bath
7. Methanol absorption flask in ice-salt slurry
8. Moisture absorbent in vent
9. Flexible heating strip
10. Thermometer

Figure 13. Apparatus for Preparation of Monomeric Formaldehyde

$$\% \text{ W/V HCHO} = \frac{0.03003 \times Va \times Na \times 100}{Vs}$$

where 0.03003 = meq weight of formaldehyde

Va = volume of acid used, milliliters

Na = normality of acid

Vs = volume of sample, milliliters

The test scheme for the evaluation of liquid sterilants is diagrammed in Figure 14. A description of the procedures used follows.

Previously sterilized screws and coupons in covered petri dishes were inoculated with 10^6 spores of B. subtilis using a sterile syringe. The petri dishes were opened slightly to allow the samples to dry. The test specimens were then thoroughly sprayed with the formaldehyde solution and each coupon was covered with a sterile mating coupon. The screws were threaded into the steel block which had also been sprayed with the sterilant. The dishes were closed and set aside for 1, 4, or 24 hours.

Following exposure, the coupons were aseptically transferred to test tubes containing 10 milliliters sterile distilled water. The screws were removed from the block and also transferred to tubes of water. Each threaded hole was swabbed with sterile cotton. The swabs were placed in the tubes with the respective screws. The samples were scrubbed ultrasonically for 5 minutes, and 1 milliliter aliquots were aseptically removed from each to prepare pour plates with tryptone glucose extract agar. Plates were incubated at 37°C for 14 days after which colony counts were made with the aid of a Spencer counter.

In the spore recovery test, previously sterilized coupons and screws in closed petri dishes were inoculated with 10^6 spores. After drying, each sample was aseptically transferred to tubes of sterile distilled water and the samples were scrubbed ultrasonically. Aliquots were aseptically removed and diluted to 10^2 spores/milliliter.

One milliliter aliquots of each diluted sample were then used to prepare pour plates with tryptone glucose extract agar. Plates were incubated at 37°C for 72 hours after which colony counts were made.

Previously sterilized coupons and screws in petri dishes were sprayed with the liquid sterilant mixtures. The dishes were covered and set aside for 4 hours. Each specimen was then aseptically placed in 10 milliliter sterile distilled water. The specimens were scrubbed ultrasonically and 10^3 or 10^4 spores of B. subtilis were added to each tube. 1 milliliter aliquots were aseptically removed from each tube to prepare pour plates

Figure 14. Test Scheme for Evaluation of Liquid Sterilants

I Sterilization Test	II Spore Recovery Test	III Formaldehyde Inhibition Test
Coupons inoculated with 10^6 spores.	Coupons inoculated with 10^6 spores.	
Coupons sprayed with liquid sterilant.		Sterile coupons sprayed with liquid sterilant.
Test coupon mated with sterile coupon.		Coupon mated with another sterile coupon.
Coupons set aside 1, 4, or 24 hours.		Coupons set aside 4 hours.
Spores collected in water.	Spores collected in water.	Coupons placed in water and 10^3 or 10^4 spores added.
	Aliquots diluted to 10^2 spores/ml.	
1 ml aliquots incubated with growth medium.	1 ml aliquots incubated with growth medium.	1 ml aliquots incubated with growth medium.
Colonies counted.	Colonies counted.	Colonies counted.

with tryptone glucose extract agar. The plates were incubated at 37°C for 48 hours minimum after which colony counts were made.

Spore recovery data are presented in Table 19. The expected number of spores, 10^6, were recovered from the smooth and rough aluminum coupons, but recovery from the screws was a little low in some cases, averaging around 7.5 by 10^5. All recoveries were acceptable for the test, however.

TABLE 19. SPORE RECOVERY FOR SMOOTH, ROUGH AND THREADED SURFACES

Inoculum: ~1 X 10^6 Spores per Sample

Samples	Population
Smooth Al coupon	
1 Plate A	12.3×10^5
Plate B	11.3×10^5
2 Plate A	9.4×10^5
Plate B	9.6×10^5
Average	10.2×10^5
Rough Al coupon	
1 Plate A	15.1×10^5
Plate B	15.6×10^5
2 Plate A	12.3×10^5
Plate B	13.3×10^5
Average	14.1×10^5
Screw	
1 Plate A	13.0×10^5
Plate B	14.8×10^5
2 Plate A	6.0×10^5
Plate B	6.2×10^5
Average	7.5×10^5

Results of the inhibition tests, Table 20, show that inhibiting action of residual formaldehyde possibly transferred to the growth medium with the dilution aliquots was not sufficient to hinder interpretation of the sterilization test results on the 4.65 percent formaldehyde-methanol solution.

TABLE 20. INHIBITION CONTROLS OF FORMALDEHYDE SOLUTIONS

Spores added to sample:	4.65% CH_2O* in Methanol ~ 1 X 10^3 Spores Recovered	7.50% CH_2O* in Methanol		5% CH_2O* in Water		10% CH_2O* in Water		Control (No CH_2O*)	
		~1 X 10^3 Spores Recovered	~1 X 10^4 Spores Recovered	~1 X 10^3 Spores Recovered	~1 X 10^4 Spores Recovered	~1 X 10^3 Spores Recovered	~1 X 10^4 Spores Recovered	~1 X 10^3 Spores Recovered	~1 X 10^4 Spores Recovered
Samples									
Smooth Al Coupon No. 1	1330	110	560	10	1130	0	890	--	--
No. 2	1350	0	--	260	660	0	--	--	--
Average	1340	55	560	135	895	0	890		
Rough Al Coupon No. 1	800	10	20	360	--	0	570	--	--
No. 2	870	0	0	580	--	50	70	--	--
Average	835	5	10	470		25	320		
Screw No. 1	450	0	350	500	--	0	1160	--	--
No. 2	960	0	940	710	--	0	1110	--	--
No. 3	1040	0	450	790	--	0	1070	--	--
No. 4	--	0	860	830	--	30	950	--	--
Average	817	0	650	707		7	1072		
Spore Suspension Controls No. 1	--	--	--	--	--	--	--	1260	12000
No. 2	--	--	--	--	--	--	--	1120	11600
Average								1.2 X 10^3	1.2 X 10^4

*Formaldehyde

However, inhibition was significant with the 7.50 percent formaldehyde-methanol solution and the water solutions. From an original population of 10^4 spores, the 7.50 percent formaldehyde-methanol in the growth medium reduced the recoverable population to 280 using the smooth coupons, 10 using rough coupons, and to 650 using the screws. Five percent formaldehyde-water caused a reduction from 10^3 spores to 135 with smooth coupons, 470 with rough coupons, and 707 using screws. Similar inhibition was observed with the 10 percent formaldehyde-water solution, with 10^4 spore population reduced to 890 using smooth coupons, 320 with rough coupons, and 1072 using screws. These results indicate that in sterilization tests using these solutions the effective original spore populations must be modified to the following:

Sterilant	Effective Spore Population
7.50 percent formaldehyde-methanol	0.1 by 10^4 to 6 by 10^4
5 percent formaldehyde-water	14 by 10^4 to 9 by 10^5
10 percent formaldehyde-water	3 by 10^4 to 1 by 10^5

Results of sterilization tests with 3.64 percent formaldehyde in methanol are presented in Table 21. The solution was already 2 months old when the test was performed. Although the exposure time was only 1 hour, the results indicated very poor sterilizing ability of the solution. As a result, further tests with this solution were cancelled.

TABLE 21. STERILIZING ACTION OF 3.64 PERCENT FORMALDEHYDE IN METHANOL ON SMOOTH, ROUGH, AND THREADED SURFACES (1 HOUR EXPOSURE)

Inoculum: ~ 1 X 10^6 Spores/Sample

Sample	Population After Exposure
Smooth Al coupon	
1	*
2	*
3	1010
Rough Al coupon	
1	~3930
2	~4180
3	0
Screw and swabs	
1	*
2	*
3	*

*Too numerous to count

Initial 1-hour tests using the 4.65 percent formaldehyde in methanol solution gave better results on the smooth coupons, but poor results on the rough coupons and screws (Table 22). Four hours' exposure with this solution initially produced sterility on the rough coupons, a decrease in population to 115 on the smooth coupons (4 logs), and a decrease to 66 on the screws (also 4 logs). After 4 weeks' storage, sterilizing action in one hour was negligible, but still fairly good in 4 hours. Spores recovered after 4-hours' exposure increased a small but significant amount over that recovered in the initial test. After 10 weeks' storage, spores recovered from the rough coupons and screws in the 4-hour exposure test increased still more, but curiously, spares recovered from the smooth coupons were less.

Since the 4-hour exposure tests were generally showing decrease in activity with age of the sterilant, the exposure period was increased to 24 hours after 16 weeks' storage of the 4.65 percent solution. No viable spores were recovered after this exposure.

In the initial 1-hour and 4-hour tests, 7.50 percent formaldehyde in methanol was similar in activity to the 4.65 percent solution (Table 23). The solution was still very effective in 4 hours after 4 weeks' storage, but decrease in activity was generally noted in the 1-hour test. After 9 weeks' storage, the 4-hour exposure test resulted in considerable decrease in lethal action on the screws. 1490 viable spores were recovered in this test, an increase of 1418 over that recovered in the test performed after four weeks' storage. Results on the coupons remained good. No viable spores were recovered from the rough coupons, while 10 spores were recovered from one out of four smooth coupons. A 24-hour exposure test made after 16-weeks' storage resulted in apparent sterility of all test specimens.

The initial, 2-week storage, and 3-week storage tests on the five and ten percent formaldehyde in water solutions employed 4-hour and 24-hour exposure periods. The 1-hour test had been deleted because of the poor results obtained for this exposure with the methanol solutions. However, apparent sterilization was achieved in all cases employing 4-hour and 24-hour exposures (Table 24). It was decided therefore to reduce the exposure in subsequent tests to 1 hour until decreases in sterilizing activity were noted.

After 4 weeks' storage the five and ten percent solutions produced near sterility in all cases (Table 24). From an original recoverable population between 10^4 and 10^5 spores, an average of 2.5 spores were recovered from the smooth coupons, none from the rough coupons, and 13 from the screws after exposure to the five percent solution. After exposure to the ten percent solution no spores were recovered from the smooth coupons, and less than ten were recovered from the rough coupons and screws.

The ten percent solution achieved apparent sterility in a 1-hour exposure after 5 weeks' storage, but not after 8 weeks. An average of 20 spores

TABLE 22. SPOROCIDAL ACTION AND SHELF LIFE OF 4.65% IN METHANOL ON SMOOTH, ROUGH, AND THREADED SURFACES

Inoculum: ~1 X 10^6 Spores/Sample

Inhibition Recovery: ~1 X 10^6 Spores/Sample

Sample	Population After Exposure					
	Initial Tests		4 Week		10 Week	16 Week
	1 Hour Exposure	4 Hour Exposure	1 Hour Exposure	4 Hour Exposure	4 Hour Exposure	24 Hour Exposure
Smooth Al Coupon						
No. 1	70	140	TNC	220	20	0
No. 2	40	90	TNC	190	0	0
No. 3	--	--	TNC	100	40	0
No. 4	--	--	TNC	130	20	0
Average	55	115	TNC	160	20	0
Rough Al Coupon						
No. 1	TNC	0	TNC	50	260	0
No. 2	TNC	0	TNC	80	80	0
No. 3	--	--	TNC	70	390	0
No. 4	--	--	~2260	50	220	0
Average	TNC	0	TNC	62	237	0
Screw & Swab						
No. 1	TNC	150	TNC	130	140	0
No. 2	~2010	50	TNC	20	1360	0
No. 3	TNC	0	TNC	10	60	0
No. 4	--	--	TNC	770	--	0
Average	TNC	66	TNC	230	520	0

TABLE 23. SPOROCIDAL ACTION AND SHELF LIFE OF 7.50 PERCENT FORMALDEHYDE IN METHANOL ON SMOOTH, ROUGH, AND THREADED SURFACES

Inoculum: 10^6 Spores/Sample

Inhibition Recovery: Between 0.1×10^4 & 6×10^4 Spores/Sample

Sample	Population after Exposure					
	Initial Test		4 Week		9 Week	16 Week
	1 Hour Exposure	4 Hour Exposure	1 Hour Exposure	4 Hour Exposure	4 Hour Exposure	24 Hour Exposure
Smooth Al Coupon No. 1	10	360	120	0	0	0
2	0	0	40	0	0	0
3	0	10	100	0	10	0
4	0	10	80	0	0	0
Average	2.5	95	85	0	2.5	0
Rough Al Coupon No. 1	10	0	0	0	0	0
2	60	10	40	0	0	0
3	0	0	140	0	0	0
4	100	--	20	10	0	0
Average	42	3	50	2.5	0	0
Screws & Swabs No. 1	280	100	~ 3880	210	1550	0
2	2120	300	~ 3440	0	670	0
3	170	120	~ 3410	30	1600	0
4	2150	110	220	50	2150	0
Average	1130	157	~ 2740	72	1490	0

TABLE 24. SPOROCIDAL ACTION AND SHELF LIFE OF 5 PERCENT AND 10 PERCENT FORMALDEHYDE IN WATER ON SMOOTH, ROUGH, AND THREADED SURFACES

Inoculum: ~1 x 10^6 spores/sample

Inhibition recovery: 5 percent solution: between 14 x 10^4 and 9 x 10^5 spores/sample

10 percent solution: between 3 x 10^4 and 1 x 10^5 spores/sample

Specimens	Population After Exposure									
	Initial Test		2 weeks	3 weeks	4 weeks	6 weeks	8 weeks		12 weeks	14 weeks
	4 hour Exposure	24 hour Exposure	24 hour Exposure	4 hour Exposure	1 hour Exposure	1 hour Exposure	1 hour Exposure	4 hour Exposure	4 hour Exposure	4 hour Exposure
5 percent formaldehyde in water										
Smooth Al coupons										
1	0	0	0	0	10	0	140	0	0	0
2	0	0	0	0	0	60	80	0	0	0
3	0	0	0	-	-	70	100	0	1 (Contam)	0
4	0	0	-	-	-	20	110	0	0	0
Average	0	0	0	0	2.5	38	107	0	0	0
Rough Al coupons										
1	0	0	0	0	0	80	70	0	0	0
2	0	0	0	0	0	60	50	0	0	0
3	0	0	0	-	-	50	50	0	0	0
4	0	0	-	-	-	90	20	0	0	0
Average	0	0	0	0	0	70	47	0	0	0
Screws and swabs										
1	0	0	0	0	20	0	70	0	0	0
2	0	0	0	0	0	10	40	0	0	0
3	0	0	0	-	20	30	120	0	0	0
4	0	0	-	-	-	0	110	0	0	0
Average	0	0	0	0	13	10	85	0	0	0
10 percent Formaldehyde in water						5 weeks / 1 hour exp				
Smooth Al coupons										
1	0	0	0	-	0	0	0	0	0	0
2	0	0	0	-	0	0	20	2 (Contam)	0	0
3	0	0	-	-	-	0	20	0	0	0
4	-	-	-	-	-	0	40	0	0	0
Average	0	0	0	-	0	0	20	0	0	0
Rough Al coupons										
1	0	0	0	-	10	0	60	0	0	0
2	0	0	0	-	0	0	70	0	0	0
3	0	0	-	-	-	0	20	0	0	0
4	-	-	-	-	-	0	20	0	0	0
Average	0	0	0	-	5	0	42	0	0	0
Screws and swabs										
1	0	0	0	-	0	0	10	0	0	0
2	0	0	0	-	0	0	70	0	0	0
3	0	0	-	-	10	0	20	0	0	0
4	-	-	-	-	-	0	10	0	0	0
Average	0	0	0	-	3	0	27	0	0	0

were recovered from the smooth coupons, 42 from the rough coupons, and 27 from the screws.

In general, a small decrease in activity with sterilant age was found in the one hour tests on the five percent formaldehyde in water solution after 6- and 8-weeks' storage. From 47 to 107 viable spores were recovered from the specimens treated with the 8-week old sterilant mixture.

The 4-hour exposure test on all specimens with five and ten percent formaldehyde-water solutions stored for a maximum of 14 weeks apparently resulted in sterilization in all cases.

Conclusions show that five and ten percent formaldehyde in water solutions were found to be effective in sterilizing smooth and rough aluminum coupons and stainless steel screws in 4 hours. The solutions did not exhibit any reduction in activity after 14 weeks' storage when this exposure period was used. When specimens were exposed to these solutions for 1 hour, near sterility was obtained after 4 weeks' storage of the five percent solution and after 5 weeks' storage of the ten percent solution. The five percent solution exhibited a slight reduction in activity after 6 weeks' storage and the ten percent solution exhibited a slight reduction after 8 weeks' storage. Inhibition of growth due to the presence of residual formaldehyde from these mixtures in the agar medium resulted in an effective original population of between 3×10^4 and 9×10^5 instead of 1×10^6 on the test specimens.

The formaldehyde-methanol solutions failed to completely sterilize in either 1 or 4 hours. Near sterilization was achieved in 4 hours with the 4.65 percent solution initially, and with the 7.50 percent solution stored up to 4 weeks. Thereafter, sterilizing activity of both on the screws decreased significantly. Activity of the 7.50 percent solution on the coupons remained fairly constant for 9 weeks. However, it is difficult to assess the actual effectiveness of the 7.50 percent solution on the rough coupons because of the high inhibiting action of the solution when these test specimens were used. Inhibition due to this solution resulted in an effective original population of 10^3 instead of 10^6. Both the 4.65 and the 7.5 percent solutions sterilized all specimens in a 24-hour exposure after the solutions had been stored for 16 weeks.

Thermal Control Coating

All upper surfaces of the Surveyor spacecraft will be painted with thermal coating B 3506-41-3. Surfaces painted subsequent to heat sterilization would contain microbiological contamination. It was therefore necessary to investigate techniques to sterilize the thermal coating and surfaces on which it is painted. The two techniques evaluated and reported are:

1) Sterilization by diffusion of ethylene gas through the thermal coating.

2) Sterilization by formaldehyde incorporated in the coating formulation.

Diffusion of Ethylene Oxide Gas Through Thermal Coating

Sterile aluminum coupons (1/2 inch by 2 inches) were placed in sterile petri dishes and inoculated with 0.1cc (10^6 spores) of a spore suspension of Bacillus subtilis var. niger. They were allowed to air dry at room temperature. The coupons were then painted with sterile thermal coating and allowed to dry at room temperature. The dried coupons were placed in the main chamber of the glove box and exposed to 12 percent ethylene oxide — 88 percent — Freon 12 for 11 hours. After flushing the box with sterile air the coupons were removed and aseptically placed in sterile distilled water. The paint was removed by ultrasonic cleaning. Suitable dilutions were made from the suspensions for pour plates on tryptone glucose agar. The plates were incubated at 37° C for 48 hours after which plate counts of colonies formed were made.

Spore recovery coupons were prepared by inoculating and painting coupons as described above omitting the exposure to ethylene oxide-Freon 12. The coupons were placed in sterile water and the paint removed by ultrasonic cleaning. Dilutions, pour plates, and plate counts were prepared to determine the spore recovery.

The sterilization and spore recovery tests were performed twice to confirm degree of contamination after exposure to ethylene oxide — Freon 12. A higher initial spore population was used in the second test.

Data are presented in Table 25 which show the effect of ethylene oxide — Freon 12 exposure on the inoculated thermal control coating samples. In the first test, spore population was reduced from approximately 10^6 to 10^4. In the second test, spore population was reduced substantially more but not uniformly. The coating on the samples in the second test and on sample 3 in the first test did not adhere well and was cracked in many places. This probably accounted for better penetration of ethylene oxide with resultant higher kill.

Formaldehyde Incorporated in Thermal Coating Formulation

Three paint samples were prepared by mixing 9 milliliters of thermal coating and 1 milliliter of 37 percent formalin (C. P.). Six sterile aluminum coupons were placed in sterile petri dishes and inoculated with 0.1 milliliter of a stock spore suspension of Bacillus subtilis containing 10^7 spores/milliliter and were allowed to air dry at room temperature. Two coupons were then painted with each of the three samples of formaldehyde — thermal coating mixture and allowed to dry at 37°C for 24 hours with the petri dishes slightly opened. The dried coupons were aseptically placed in 10 milliliter sterile distilled water and the coating removed by ultrasonic cleaning. Suitable dilutions were made for pour plates using tryptone

TABLE 25. EXPOSURE OF INOCULATED THERMAL CONTROL COATING TO 12 PERCENT ETHYLENE OXIDE - 88 PERCENT FREON 12 AT 30-50 PERCENT RELATIVE HUMIDITY FOR 11 HOURS

Specimens	Population of Bacillus Subtilis Spores After 48 Hours Incubation at 37°C (Colonies X Dilution Factor)					
	Test I			Test II		
	x10	$x10^2$	$x10^4$	x10	$x10^3$	$x10^5$
Spore recovery test (control)						
1	*	*	119	*	*	81
2	*	*	41	*	*	75
3	*	*	86	*	*	70
4	*	*	88	*	*	75
Coupons exposed to ETO-Freon 12						
1	1310	259	3	2	0	0
2	1335	248	1	190	2	0
3	86	13	0	17	0	0
4	1640	308	3	14	0	0

*Too numerous to count

glucose extract agar. Plates were incubated at 37°C and counts were made after 48 hours and after 19 days incubation.

Three sterile aluminum coupons were placed in sterile petri dishes and painted with one formaldehyde — thermal coating sample. The coupons were allowed to dry at 37°C for 24 hours with the petri dishes slightly opened. The dried coupons were aseptically placed into 10 milliliter sterile distilled water and the paint removed by ultrasonic cleaning. Aliquots were diluted in the same manner as the sterilization samples. 10^3 spores of Bacillus subtilis were then added to each dilution. The dilutions were mixed aseptically and 1 milliliter aliquots were removed to prepare pour plates with tryptone glucose extract agar. The plates were incubated for 48 hours at 37°C after which plate counts were made.

Effect of formaldehyde on the inoculated aluminum strips is shown in Table 26. The quantity of formaldehyde present in the dilutions apparently had little inhibiting effect on the growth of viable Bacillus subtilis spores on

TABLE 26. SPOROCIDAL ACTION OF FORMALDEHYDE-THERMAL COATING STERILANT

Specimen	Spore Population after 48 Hours Incubation at 37°C (Colonies x Dilution Factor) $x10^2$	$x10^4$
Sterilization test*		
1	0	0
2	0	0
3	0	0
4	0	0
Inhibition control*		
1	-	164
2	-	168
3	-	117
4	-	97
Average		136
Original population		
1	-	137
2	-	142
3	-	153
Average		144

*Concentration of formaldehyde in aliquots used to prepare pour plates would be 3.7×10^{-7} gm/ml if all formaldehyde had remained in the sample.

on the agar plates. The formaldehyde-coating formulation reduced the spore population from 10^6 to at least below 100.

To determine whether the paint-sterilant mixture would kill 10^6 organisms the test was repeated using an inoculum of 10^7 spores on each aluminum coupon, and preparing a pour plate from an aliquot of the undiluted suspensions as well as from the dilutions. Inhibition tests were modified in a like manner. In order to determine how long the mixture was effective as a sterilant this test was repeated weekly for 4 weeks. Results are shown in Tables 27 and 28. Table 27 demonstrates that no inhibition of growth of viable spores on the agar plates due to the presence of formaldehyde occurred in any of the dilutions. Table 28 shows that except for one of the coupons in test I the formaldehyde-paint mixture was effective in killing 10^6 spores of Bacillus subtilis for the 4 weeks.

TABLE 27. SPOROCIDAL ACTION AND SHELF LIFE OF FORMALDEHYDE - THERMAL COATING STERILANT - INHIBITION TESTS

Specimen	Inhibition Tests Spore Population after 48 Hours Incubation at 37°C (Colonies x Dilution Factor)											
	Test I			Test III (2 weeks)			Test IV (3 weeks)			Test V (4 weeks)		
	Dilution* 1	Dilution 2	Dilution 3	Dilution 1	Dilution 2	Dilution 3	Dilution 1	Dilution 2	Dilution 3	Dilution 1	Dilution 2	Dilution 3
	$x10^5$	$x10^5$	$x10^5$	$x10^5$	$x10^5$	$x10^5$	$x10^5$	$x10^5$	$x10^5$	$x10^5$	$x10^5$	$x10^5$
Coupon												
1	129	101	102	157	153	110	119	126	131	149	126	130
2	90	118	112	148	108	168	128	156	97	147	123	125
3	134	105	138	125	148	127	152	103	131	131	114	148
Average	118	108	117	143	136	135	133	128	120	142	121	134
Control**												
1	99×10^5											
2	92×10^5											
3	104×10^5											
Average	98×10^5											

*If all of the formaldehyde had remained in sample, concentration in aliquot used for pour plate would be:

dilution 1 - 3.7×10^{-4} gm/ml

dilution 2 - 3.7×10^{-5} gm/ml

dilution 3 - 3.7×10^{-7} gm/ml

**Stock spore suspension.

TABLE-28. SPOROCIDAL ACTION AND SHELF LIFE OF FORMALDEHYDE—THERMAL COATING STERILANT — STERILIZATION TESTS

Specimen	Sterilization Tests Spore Population after 19 Days Incubation at 37°C (Colonies x Dilution Factor)														
	Test I*			Test II (1 week)*			Test III (2 weeks)*			Test IV (3 weeks)*			Test V (4 weeks)*		
	x10	$x10^2$	$x10^5$	x10	$x10^2$	$x10^5$	x10	$x10^2$	$x10^5$	x10	$x10^2$	$x10^5$	x10	$x10^2$	$x10^5$
Paint Sample No. 1															
Coupon A	1**	0	0	0	0	0	0	0	0	0	0	0	0	0	0
Coupon B	15**	0	0	0	0	0	0	0	0	0	0	0	0	0	0
Paint Sample No. 2															
Coupon A	0	0	0	0	0	0	0	0	0	0	0	0	0	0	0
Coupon B	0	0	0	0	0	0	0	0	0	0	0	0	0	0	0
Paint Sample No. 3															
Coupon A	1**	0	0	0	0	0	0	0	0	0	0	0	0	0	0
Coupon B	4**	0	0	0	0	0	0	0	0	0	0	0	0	0	0

*If all of the formaldehyde had remained in sample, concentration in aliquot used for pour plate would be:

dilution factor	concentration
x10	3.7×10^{-4} gm/ml
$x10^2$	3.7×10^{-5} gm/ml
$x10^5$	3.7×10^{-7} gm/ml

**Colonies began to appear after 14 days incubation.

ETHYLENE OXIDE DIFFUSION STUDIES

During the course of the Surveyor sterilization program it became evident that there was considerable uncertainty as to the length of time required to displace the air inside of the structural aluminum tubes by diffusion of sterilizing gases through small holes.*

The Surveyor design called for the use of six different types of tubes differing widely in dimensions. Although it was obvious that the rate of displacement would be different for each type of tube, there was some question as to how tube geometry would affect the rate.

The analytical and experimental work aimed at estimating the effects of the variables involved is the subject of this portion of the report.

Experimental Procedure

Samples of the aluminum tubes to be used in Surveyor were selected for the experimental work. The dimensions of these tubes are shown in Table 29.

TABLE 29. TUBE DIMENSIONS

Tube	Wall Thickness, inches	Inside Diameter, inches	Length, inches
A	0.065	1.367	36
B	0.124	1.252	36
C	0.050	1.141	36
D	0.064	0.635	25
E	0.068	0.870	18
F	0.031	0.441	11

Each of the tubes had two holes of 3/32 inch diameter.

One hole, 3/32 inch diameter, was drilled 1 inch from each end of each tube. Aluminum caps with holes drilled in the center in which rubber plugs were sealed, were fitted on the ends of the tubes. The edges of the cap were taped with approximately ten turns of mylar tape. The holes in the tubes and the rubber plugs were covered with ten layers of mylar tape. All tubes were taped to the floor of the main chamber of the glove box (Figure 10) so that the holes were on the sides of the tubes and parallel to the chamber floor.

*Refer to Dynamic Science Report No. 1, Appendix D, pp D107 to D118, "Sterilization of Remote Spaces in the Spaceframe and in Compartments A and B".

With the door between the main chamber and antechamber open, the entire glove box was filled with 12 percent ethylene oxide - 88 percent Freon 12 by flushing. Samples of gas were removed from the top and bottom of the box at intervals during the filling and analyzed by gas chromatography. When the gas composition reached 11.5 to 12 percent ethylene oxide flushing was stopped and all valves closed. After 15 minutes, gas samples were again removed and analyzed to assure equilibrium conditions. The tape was then removed from the holes on all tubes except the control tube. After exposure times predetermined for each tube, the tapes were replaced over the holes. The smaller tubes were immediately removed from the box by placing in the antechamber, closing the inner door, and flushing out the antechamber with air. The larger tubes remained in the glove box until the last tube had been retaped.

After the last tube had been retaped, the glove box was flushed with air and all the tubes were removed. The gas in the tubes were sampled through the rubber plugs for gas chromatographic analysis.

Part of the above run was repeated with three of the tubes. The data are shown in Table 30.

Diffusion Model

Development. One part of the sterilization program was the development of an analytical model of the diffusion process in terms of tube geometry and gas concentration. At the start of this development it became evident that the usual diffusion models based on linear flow throughout a volume did not apply. In the present case it was obvious that flow could not be considered linear except in the small hole in the tube walls. Under the circumstances it appeared that the best approach would be to develop the model on the basis of simplifying assumptions concerning three distinct physical subdivisions of the total system volume (the inside of the tube, hole, and outside).

The following assumptions were made:

1) Fick's law of diffusion applies.

2) A quasi-stationary state exists at the hole (i.e., a linear concentration gradient across the hole was assumed).

3) There is an infinite source of sterilizing gas surrounding the tube. That is, the concentration of ethylene oxide remains constant outside of the tube. (The volume of the glove box is much larger than that of the tubes.)

4) The diffusion coefficient is a constant independent of concentration.

TABLE 30

Sample	Exposure Time, seconds	Ethylene Oxide, Percent by volume	Run Number
Glove box, top	45 minutes flush	22.3	1
Glove box, bottom	45 minutes flush	24.6	1
Tube E	2700	23.7	1
Tube E	2700	21.7	1
Tube F	300	21.7	1
Tube D	1800	17.3	1
Tube B	14400	21.8	1
Tube C	7200	17.4	1
Tube A	10800	18.4	1
Glove box, top	45 minutes flush	20.1	2
Glove box, bottom	45 minutes flush	26.4	2
Glove box, bottom	45 minutes flush	23.7	2
Tube E	1050	15.2	2
Tube F	300	22.2	2
Tube E	1050	13.6	2
Tube D	1110	21.4	2

5) Pressure is constant throughout the system and Avogardro's law applies. Thus for every molecule entering the tube another molecule leaves.

6) At any time the concentration of any given type of molecule inside of the tube is uniform throughout the volume. (That is, instantaneous mixing is assumed.)

In view of assumption 5, attention can be concentrated on the flow of ethylene oxide. The rate of flow of ethylene oxide molecules per unit area of the hole at any point, x, in the hole (measured along the wall thickness) at any time, t, will be

$$D \frac{\partial c}{\partial x} \text{ (assumption 1)}$$

where

D = diffusion coefficient-$\overline{cm}^2$/sec (assumption 4)

c = number of molecules of ethylene oxide per $\overline{cm}^3$ at x

Using assumption 2, we can write

$$\frac{\partial c}{\partial x} = \frac{c_\infty - c}{\theta}$$

as the gradient across the hole

where

c_∞ = concentration of ethylene oxide outside of the tube (constant by assumption 3)

c = concentration of ethylene oxide inside of the tube (varies with time but uniform at all points of the tube - assumption 6)

θ = wall thickness of tube-cm.

Let a = area of hole (or holes)

Then the total number of molecules of ethylene oxide per second flowing into the tube is

$$\frac{dN}{dt} = Da\left(\frac{c_\infty - c}{\theta}\right)$$

where

N = total number of molecules of ethylene oxide in the tube at time, t.

Let V = inside volume of tube

Then $N = Vc$ (assumption 6) and by substitution we get

$$\frac{dc}{dt} = \frac{Da}{V\theta}(c_\infty - c)$$

This can be integrated to give

$$\ln\left(1 - \frac{c}{c_\infty}\right) = \frac{-Da}{V\theta}t \text{ (since } c = 0 \text{ at } t = 0)$$

A more convenient form of the equation is

$$\ln\left(1 - \frac{P}{P_\infty}\right) = \frac{-Da}{V\theta}\, t$$

where

P = volume percent of ethylene oxide inside of tube

P_∞ = volume percent of ethylene oxide outside of tube (bottom of glove box)

$(1 - P/P_\infty)$ represents the fraction of steady state remaining unattained at time, t.

Analyses. With the aid of equation derived in the previous section values of the diffusion coefficient were calculated from the laboratory data giving the following:

Tube	$D\text{-}\overline{cm}^2/sec$
E	0.415
E	0.269
F	0.173
D	0.159
B	0.387
C	0.146
A	0.205
E	0.302
F	0.176
E	0.253
D	0.410

The scatter of these values does not appear to be excessive in view of the fact that the $V\theta$ product of the tubes varies from 2.2 to 229 $\overline{cm}^4$. However it was decided to determine whether the scatter was random or associated with tubes.

An analysis of variance of the E-type tubes showed that there was no significant difference between different specimens of tubes of the same geometry.

Since tests had been repeated on Types D and F as well as E, comparisons of tubes of different geometries could be made, provided that random errors were compatible. A Bartlett's test revealed that such was the case and therefore an analysis of variance was performed. This showed no significant difference between tubes. Therefore it was concluded that the scatter was random and that the equation does correct for differences in tube geometry.

It should be emphasized that these remarks should not be construed as implying "proof" of a constant diffusion coefficient. The statistical test simply shows that any fluctuations of diffusion coefficient from one type of tube to another cannot be distinguished from the random error. However, it is obvious that if the error is sufficiently large this might apply equally to the slopes in which case the "correction" would be meaningless. Therefore it was decided to repeat the analysis of variance using the slope data of the same tubes (D, E, F).

The analysis showed a very highly significant difference between tubes (at a significance level of less than .001). Thus, there is little doubt that slopes are associated with tubes while diffusion coefficients are not.

Unfortunately since tests had been repeated on only three tubes the others could not be included in the analysis. Therefore, we can only assume that the above generalization applies to the other three tubes.

There is a way by which data of all of the tubes can be evaluated for consistency with the derived equation. If the derivation is correct then a high degree of correlation would be expected between the slopes of the tubes, $\ln(1 - P/P_\infty)/t$, and the reciprocals of their $V\theta$ products. This was found to be the case because a correlation coefficient of -0.992 was obtained. This is highly significant at a level of .001 and thus the analysis was considered as having yielded a satisfactory verification of the equations.

The mean value of the diffusion coefficient was calculated as 0.263 $\overline{cm}^2$/sec. with a 95 percent confidence interval of 0.194 to 0.332 $\overline{cm}^2$/sec. Thus, the random error gives rise to some doubt as to the location of the universe curve of any given tube. This is shown in the following table of values calculated using the confidence limits of the diffusion coefficient.

Time Required to Attain 95 Percent of Equilibrium, - hours

Tube	Lower Limit of D	Upper Limit of D
A	6.9	4.0
B	11.0	6.4
C	3.7	2.2
D	1.0	0.6
E	1.5	0.8
F	0.10	0.06

These are expected values and represent points of the limiting curves. (That is, the random errors have been reduced by "averaging".)

These expected values can be used for planning sterilizing schedules. Note that in the worst case (Tube B) sterilization should be carried out for at least 11 hours. It should be pointed out that the protection given by the limits is safer than it might appear because the 95 percent lower limit corresponds to a 97.5 percent one-sided limit.

One way of expressing this is as follows: Assume that a very large number of tests was performed on tube B, each test consisting of exposing the tube to sterilizing gas for 11 hours and obtaining its ethylene oxide content as a percentage of the glove box value. Then it can be stated that at the 97.5 percent confidence level the average of these readings will be at least 95 percent. (It could be more accurately expressed as the fraction of a large number of averages exceeding 95 percent.)

Conclusion

If sterilization is carried out for at least 11 hours, it can be stated at the 97.5 percent confidence level, even in the case of the tube of lowest diffusion rate, the expected ethylene oxide content will be 95 percent of the glove box value in which the test took place.

Recommendations

The following recommendations should be considered for any future diffusion work.

1) An effort should be made to reduce the rather large experimental error.

2) Effectiveness of seals should be determined and seal controls used if necessary.

3) Replicate tests on each type of tube should be made.

4) Glove box means are used with every tube value and hence, to avoid inflating the error, should be estimated accurately. If test error cannot be reduced then the only alternative is to take a large number of readings.

5) Measurements of mortality rates of organisms under diffusion conditions should be made.

Alternatives to increasing sterilization time are:

1) Increasing hole area. (The time required to reach any given level of ethylene oxide concentration is inversely proportional to the hole area.)

2) Increasing temperature. (Since diffusion coefficients follow the Arrhenius equation, a moderate increase in temperature should have a pronounced effect in reducing time.)

SUBSYSTEM ASEPTIC ASSEMBLY STUDIES

Those units or subsystems determined to be heat-labile and thus not capable of withstanding the heat sterilization process were investigated for development of alternate processes to achieve sterility. Generally those alternate processes involved complicated procedures of many operations and sterilizing techniques. The procedures developed for the alternate processes are presented in Appendix C. Where necessary, details relating to the aseptic procedures are discussed in the following paragraphs. In the case of gas system pressurization, aseptic methods of pressurizing were investigated. The latter was to include sterile filtering techniques for the pressurization of the nitrogen gas system for the attitude control jets and the helium gas pressurization for the vernier propulsion system.

Vernier Propulsion Subsystem

Since the hardware of the vernier propulsion subsystem is an integral part of the Surveyor spacecraft, the equipment was designed to be compatible with the heat sterilization process conducted at Hughes. The liquid propellant and oxidizer were to be supplied to the spacecraft at the launch site in a sterile condition. Evaluations of the self-sterilizing properties of nitrogen tetroxide (N_2O_4) and monomethylhydrazine (MMH) were undertaken for the subcontractor, Thiokol Chemical Corp., Reaction Motor Division, Denville, New Jersey, by the Food and Drug Research Laboratories, New York, New York. A series of micro-organisms were exposed to the fuel and oxidizer under controlled conditions. The types of cells and the survival of these cells obtained in the study have been summarized in Tables 31 and 32. It is seen that all organisms were destroyed by nitric acid within 10 minutes. Spores of Clostridium Sporogenes survived for 6 hours in monomethylhydrazine, not for 24 hours. Spores of Bacillus Stearothermophilus remained viable after 7 days in contact with MMH although 99.9 percent were inactivated.

With these results the vernier fuel and oxidizer were considered self-sterilizing with a minimum storage time of 30 days within the appropriate shipping containers. In this manner all organisms were considered to be rendered inviable when delivered to the launch site.

Dr. Chiego of Bernard Chiego and Associates, Bloomfield, New Jersey, subcontracted the biological evaluation of MMH & N_2O_4 to the Food and Drug Research Laboratories for Thiokol. In addition, a literature survey was conducted by Dr. Chiego on the bacteriostatic and/or bactericidal activity of MMH and N_2O_4. This survey and the biological report is presented in Appendix D.

TABLE 31. SELF STERILIZING PROPERTIES OF NITRIC ACID†

Microorganism	Number of Cells per Milliliter			
	Original	After 10 Minutes	After 1 Hour	After 6 Hours
		LESS THAN		
Staphylococcus aureus	1,000,000	100	100	100
Escherichia coli	1,000,000	100	100	10
Bacillus subtilis[1]	1,000,000	100	100	10
Bacillus cereus[1]	1,000,000	100	100	10
Bacillus stearothermophilus[1]	1,000,000	100	100	10
Clostridium sporogenes[1]	1,000,000	100	100	10
Saccharomyces cerevisiae	1,000,000	100	100	10
Aspergillus niger[1]	1,000,000	100	100	10
Penicillium notatum[1]	1,000,000	100	100	10

[1]Spores.

†(Bacteriological Report No. 82658, Food and Drug Research Lab, Inc.)

In regard to the helium pressurization system, sterilization of the helium gas was to be accomplished by filtration. A helium sterilization filter assembly was to have been installed on the spacecraft prior to heat sterilization. The filter assembly would have been heat-sterilized with the spacecraft and would have remained intact until pressurization of the helium system was completed. The filter assembly would have then ensured a sterile helium gas supply within the spacecraft helium tanks. After pressurization, the filter assembly would have been removed prior to installation of the Centaur nose fairing.

Main Retro-Rocket Engine

Sterilization of the Surveyor retro-rocket engine by thermal, ETO gas, and irradiation techniques was investigated. Studies to determine the effect of thermal and irradiation techniques as means of producing sterile

TABLE 32. SELF STERILIZING PROPERTIES OF MONOMETHYL HYDRAZINE†

Microorganism	Number of Cells Per Milliliter				
	Original	After 10 Minutes	After 1 Hour	After 6 Hours	After
Staphylococcus aureus	1,000,000	< 100	< 100	< 10	
Escherichia coli	1,000,000	100	< 100	<100	
Bacillus subtilis[1]	1,000,000	>1,000	< 100	<100	
Bacillus cereus[1]	1,000,000	>1,000	< 100	<100	
Bacillus stearothermophilus[1]	1,000,000	>1,000	>1,000	>100	7 days 1,000
Clostridium sporogenes[1]	1,000,000	>1,000	>1,000	>100	24 hours <10
Saccharomyces cerevisiae	1,000,000	100	< 100	<100	
Aspergillus niger[1]	1,000,000	< 100	< 100	<100	
Penicillium netatum[1]	1,000,000	< 100	< 100	<100	

†Bacteriological Report No. 82658, Food and Drug Research Lab, Inc.

[1]Spores.

propellant were conducted with TP-H-3053 B (Ha-imine) and TP-H-3062 (HC-imine-epoxide) propellant, liner, and insulation materials.

Physical property data indicated that the HA-imine system could withstand the conditions necessary to produce sterility. However, the stresses and strains placed upon the propellant, liner, and components during the thermal conditioning were so great that the reliability and performance of the sterilized engine were compromised.

An evaluation of the effects of ETO gas and the effects of exposure to high vacuum conditions was also conducted on the retro-rocket components. No significant changes were experienced in the mechanical properties of the component parts of the main retro-rocket or in the performance of the

igniter materials after 24 hours of exposure to a sterilizing atmosphere of an ethylene oxide-Freon 12 gas mixture.

No changes were observed in Surveyor components exposed to a vacuum of 10^{-5} and g x 10^{-6} Torr for 235 hours.

The detailed information on the investigations conducted on the retro-rocket is provided in detail in Volume 2 of this report.

Since the retro-rocket is to burn out its propellant at extremely high temperature before lunar touchdown and since the heat sterilization process degraded the propellant properties, a waiver to the heat sterilization requirement was deemed necessary. However, methods were to be implemented to negate any microbiological contaminating on areas of the engine that would not be sterilized by the burning propellant nor by the ethylene oxide terminal sterilization process. These areas included the interface between the retrorocket nozzle and case, bolts, other hardware and seals used to secure the nozzle to the case, the pyrogen and associated hardware, and the sheets of aluminized mylar that insulate the case.

To sterilize in these instances required a combination of processes and procedures. The aseptic assembly process was to entail the heat sterilization of the retro shell and liner, the seals and the aluminized mylar sheets. As the components would be installed painting of the mating surfaces with a liquid sterilant such as 5 percent formaldehyde in anhydrous methanol would have provided the sterilizing agent. Figure C-1 in Appendix C illustrates the details of the retro-rocket aseptic assembly procedure.

Tape Recorder

In a study to determine the suitable process of sterilizing the tape recorder originally planned for the Surveyor spacecraft, a problem was uncovered involving the compatibility of the mylar tape used within the recorder.

Heat sterilization of the tape in the taut condition resulted in the transfer of the iron oxide coating of the type to other parts of the tape in contact. Installation of the tape in the loosely wound condition necessitated a design modification in which a mechanism is used to keep the tape loose during the heat sterilization process, then released, allowing the tape to become taut, after completion of the sterilization process. Such a modification was considered feasible but probably unreliable. Investigations by the subcontractor had produced no other tape which could better withstand heat sterilization.

Since the permeability of mylar to ethylene oxide was very low, and since iron oxide is generally incompatible with ethylene oxide, the possibility of sterilizing the tape with ethylene oxide-Freon 12 gas mixture was considered unlikely. Hence, radiation sterilization was considered, but mylar

is degraded by irradiation, and therefore sterilization by this process was not recommended.

Since redirection to the Surveyor program deleted the use of a tape recorder, no additional sterilization work was considered necessary. If efforts were to be expended to provide a sterile tape recorder in a later program, resolution of the problem areas might pursue the following suggestions: continue the investigation of heat sterilizable tapes; investigate possible self-sterilizing properties of the binder material or the possibility that the tape manufacturing process may have produced internal sterility (if either of these cases is true, surface sterilization only may be required); further investigate the feasibility of the tape recorder design modifications.

If it is found that the tape recorder cannot be designed to satisfactorily withstand heat sterilization with the tape installed, an aseptic assembly procedure will be necessary. Two procedures that can be used are described below:

Heat Sterilization and Rigid Glove Box Usage

a. Package tape, loosely wound on reel (use metal, glass, or mylar package which can be sealed).

b. Package remainder of assembled tape recorder plus cover (equipped with valve).

c. Heat sterilize sealed packages.

d. Transfer sealed packages, solder, soldering iron, flexible tubing, and other materials and tools necessary to complete assembly of tape recorder, to glove box equipped with valves and electrical outlets.

e. Sterilize contents of glove box with ethylene oxide-Freon 12 gas mixture.

f. Flush glove box thoroughly with sterile air or nitrogen.

g. Using gloves in glove ports, unseal packages; complete tape recorder assembly, installing tape and solder-sealing cover.

h. Attach valve on cover to glove box valve with flexible tubing.

i. Have helium source and vacuum pump connected to glove box valve through sterile tubing and bacteriological filter.

j. Pull vacuum on tape recorder.

k. Refill tape recorder with 1/2 atmosphere of sterile helium.

l. Close valves.

m. Remove tape recorder from glove box, crimp off valve and seal.

Heat Sterilization and Flexible Film Glove Box Usage

a. Place loosely wound tape, remainder of tape recorder, cover (equipped with valve), and other materials and tools necessary to complete assembly of tape recorder, in flexible glove box equipped with valve.

b. Disconnect box from support frame. Pull vacuum on box.

c. Refill with helium.

d. Place box in oven. Heat sterilize.

e. Remove box from oven and connect to support frame.

f. Using gloves in glove port, complete tape recorder assembly, installing tape and sealing on cover.

g. Connect tape recorder valve to glove box valve with tubing. Connect vacuum pump to glove box valve through bacteriological filter.

h. Start pump. Open valve. Reduce pressure in tape recorder package to 1/2 atmosphere.

i. Close valves.

j. Remove tape recorder from glove box and seal off valve.

Batteries

The possibility of heat sterilizing the battery was negated by the use of a polystyrene battery case construction which could not withstand the required elevated temperature. In addition the electrolite, KOH, being a water solution would boil at the elevated temperature and pressurize the polystyrene case to such an extent that the generated steam would eventually burst the case. Since the basic construction of the battery could not be changed, an alternate method was suggested to render the battery sterile in lieu of heat sterilization. Based on the proposal by Electric Storage Battery Co. in conjunction with JPL to produce a sterile battery by a combination of chemical sterilization and aseptic assembly the heat sterilization requirement was waived. The verification of the proposal rested upon the development of a bactericidal potting compound. Since acceptance of a flight-type battery was contingent upon a successful demonstration of the success of the

potting compound to kill any organism it encountered, attention was focused upon the first demonstration of a suggested compound. All compounds tested failed to produce the desired results of destroying the organisms tested.

Procedure of Proposed Aseptic Assembly Method

a. All internal cell components to be sterilized by contact with the potassium hydroxide electrolyte.

b. Electrical wire, cell connectors, lacing tape, etc., to be sterilized by 24 hour exposure to 270°F.

c. Metals and injection molded plastic parts are inherently internally sterile by virtue of the heat used during manufacture and for fabrication.

d. Potting components and cements not self-sterilizing are made sterile by the addition of 3% by weight of a 37% formaldehyde-63% methyl alcohol solution.

e. All mating surfaces not sterilized by electrolyte or potting compounds to be either heat soaked at 270°F for 24 hours or wiped with formaldehyde-alcohol solution.

f. The assembled cells and/or batteries to be capable of sterilization by exposure to ethylene-oxide - Freon 12 mixture.

4. STERILIZATION ACTIVITY AT ATLANTIC MISSILE RANGE

Since the sterilization requirements imposed restrictive operational constraints on the testing and launching activities at Atlantic Missile Range, efforts were made by the Mission Operations Department to assure compatibility of the AMR activities with the requirements. With the terminal surface sterilization process occurring at AMR as one of the last operations prior to launch, the effectiveness of the process depended on the contamination control prior to the application. Hence any operation subsequent to heat sterilization influenced the control requirements. These post-heat-soak operations as seen in Figure 1 involved assembly, test, disassembly, shipping, assembly, and test of the spacecraft respectively. In evaluating adequate control, methods for AMR operation with the sterilization constraints, Dynamic Science Corp. was contracted to assist the launch operation activity. Copies of the reports prepared by Dynamic Science Corp. are provided in Appendix D.

Studies of alternates available for the AMR spacecraft sterilization activities, together with estimates of the possibilities of achieving initial sterilization program objectives were conducted based on experiments utilizing various types of physical and procedural barriers.

GENERAL REQUIREMENTS FOR TERMINAL STERILIZATION EFFECTIVENESS

Each sterilization process has a success probability function with several independent variables. For example, a high probability of sterilization success could be realized by subjecting an object bearing only a few cells from a growing micro-organism culture to a 4-hour exposure to ethylene oxide of adequate concentration at prescribed temperature limits. The probability of the same process sterilizing a large inoculum of spores deposited on the object from a salt solution or covered by corrosion products is very low.*

---

* Opfell, J.B., "Effect of Encasement of Bacterial Spores on the Sterilization Effectiveness of exposure to Gaseous Sterilant and Application of Liquid Sterilant," Dynamic Science Corp., 19 June, 1962 (Appendix D).

Any estimate of the probability of sterilization effectiveness cannot be given much significance in absolute terms because the ability of ethylene oxide exposure to sterilize protected spores is unknown. In fact, present studies have indicated that unless the complete Surveyor spacecraft is sterilized by thermal exposure while encapsulated in the nose fairing, the probability of launching a sterile vehicle is low. The probability depends on the care exercised to exclude protected spores from access to the spacecraft. Some additional requirements for sterilization process effectiveness are as follows:

1) Presterilization contamination must be controlled. The microorganism presenting the greatest obstacle to terminal ethylene oxide sterilization is the spore which is completely encased in a thick deposit of dry organic material (such as dried food or insects) or in crystalline material (such as concrete, corrosion products, or polishing compound). Data on the rate of rehydration or killing of spores in these environments, resulting from diffusion of moisture and ethylene oxide through the protecting material, is almost nonexistent. Spores which are so protected occur on animals, people, tools, floors, and elsewhere. These spores can be transferred to the spacecraft or nose fairing by handling or by lifting on air currents. Fortunately, the heavier the coating of protective material, the less time the particle containing the spore will be airborne.

2) All surfaces to be sterilized by ethylene oxide must be accessible. Ethylene oxide cannot rapidly penetrate crystalline salts, corrosion products, heavy organic encrustments, or accretions of polishing compound; therefore, contamination by such materials must be minimized.

3) The local concentration of ethylene oxide must be adequate. It is absorbed by many materials in substantial amounts. Absorption changes the concentration of the gas adjacent to the materials and either decreases the concentration of ethylene oxide by absorption or increases it by freon absorption.

4) Desiccated spores cannot be sterilized reliably by exposure to ethylene oxide at process humidity unless they have been rehydrated by direct contact with liquid water. Thus only sterile surfaces may be exposed to vacuum for long periods if they cannot be washed subsequently with water.

5) Documentation of environment adequacy, conformance to written procedures, and statistical control of the contamination rate is essential to demonstration that exposure to the ethylene oxide process has sterilized the spacecraft.

Mobile Sterilization Unit

The design of the mobile sterilization unit was deemed the responsibility of the Launch Operation Section since the terminal surface sterilization was to be administered under the jurisdiction of Launch Operations. This was originally termed the Mobile Sterilization and Temperature Control Unit because gas sterilization and temperature control was to be performed by the same unit. As the two requirements became more divergent in desired versatility, two units were felt necessary. Hence the mobile sterilization unit was to perform terminal surface sterilization on the spacecraft while sealed within the GDA nose fairing.

Mobile Sterilization Unit Design Capability: The mobile sterilization unit would introduce into the sealed nose fairing a sterilant gas supply mixture of 12 percent (by weight) ethylene oxide (ETO) and 88 percent (by weight) Freon 12 gases, blended at a relative humidity of 30 +15 percent, -5 percent. The temperature within the nose fairing would be controlled during the sterilization process in a temperature range of 68 ± 2 to 86 ± 4°F. The gas sterilization unit would create a low-pressure vacuum in the nose-fairing cavity prior to introduction of the sterilizing gas mixture.

A humidity blending chamber would be provided on the Mobile Sterilization Unit to control the humidity throughout the sterilization process. The unit would regulate and maintain the blended sterilizing gases within the nose-fairing cavity for a period of 10 to 24 hours. Pressure gages and indicators were incorporated on the unit for direct readout of pressures, temperatures, humidity blending, gas concentration, gas quantity, and gas flow during the sterilization process. Blending and gas flow operations were to be semiautomatic and would provide for final adjustment and overriding of the automatic system.

The Mobile Sterilization Unit would have had the capability of removing the sterilant gases from the nose-fairing cavity and purging with sterile nitrogen gas for a period of 4 hours. To ensure sterility the nitrogen would pass through 0.3 micron filters. A disposal system was to be incorporated on the unit compatible with the specified sterilant gases, and was to be capable of transporting varying amounts of waste gases from the nose-fairing cavity to the disposal unit for detoxication and disposal. In the event of emergency, the disposal system was capable of detoxicating and disposing of all gases from within the nose-fairing cavity.

The Temperature Control Unit was to be attached to the sterilization unit and was capable of operating independently. After the spacecraft was sterilized, the temperature control unit would be detached from the sterilization unit and would operate from a commercial or mobile power source, depending on the existing conditions. The temperature control unit would maintain the temperature range within the sterilized nose-fairing from 68 ± 2 to 86 ± 4 °F continuously during the sterilization process, storage, and transportation of the spacecraft to the launch pad. The Temperature Control Unit would be capable of automatically regulating the temperature

within the nose-fairing cavity at the required levels. After turn-on, the spacecraft receiver would operate on power of 9 to 100 watts, depending on checkout period duration. During transportation, heat from the sun will create an additional thermal load of 200 to 400 watts. These conditions would create varying thermal levels within the nose-fairing cavity which would have been automatically sensed and regulated by the temperature control unit to remain within the specified temperature range. Procurement Specification 223451 of this unit is provided in Appendix A.

STERILIZATION ALTERNATIVES AT ATLANTIC MISSILE RANGE

Four types of physical barriers were considered for use in the spacecraft sterilization process at Atlantic Missile Range. They are designated Types A, B, C, and D.

The Type A barrier is a form of cover for the spacecraft. While this cover could conceivably be of parachute cloth, preferably it would be of sterilizable polyvinyl chloride film-treated to be dust repellent. This film would be highly transparent. Because of the possibility that a particle of the film could fall loose onto the spacecraft, the film would be compatible for heat sterilization of 24 hours at 125°C. The Type A barrier would fit over the spacecraft and would be supported from the spacecraft mounting device. The barrier was designed so that operators would have access to the spacecraft through doors of restricted opening. Design provided for removal of the entire upper part by hoist, thus permitting access to the spacecraft for retro-rocket engine installation. The barrier floor provides for easy cleaning and for reduced contamination from heavy dust.

At Atlantic Missile Range, the spacecraft was to be transported within the barrier; exterior surfaces would be washed with a sterilant before inside work begins in any new room. The barrier would be supplied continuously with temperature-controlled air which would have been filtered to remove all particles greater than 0.3 micron in diameter; air flow would be of sufficient volume that the movement of air would always be outward from the cover at the access openings. The air supply of the filter would be from the space just outside the barrier. The barrier would confine most of the toxic vapors used in liquid sterilant procedures. (While using liquid sterilants, the air flow from the cover would be vented to keep toxic vapors confined.) The barrier would also reduce the access of heavy particles from the floor, walls, and ceiling, reduce the level of airborne bacteria in the air immediately surrounding the spacecraft, and reduce the number of contaminated objects touching the spacecraft.

The Type B barrier consists of a dust-controlled room, either portable or with a portable roof. Because the spacecraft would be moved several times to different locations, a portable room appeared desirable from a cost standpoint, although two or three separate permanent dust-controlled rooms may prove less expensive than one portable one. The

room would be cleaned and fumigated for use each time a spacecraft was placed in it for work. The room would be supplied with air sterilized by filtration and includes an airlock designed to reduce the amount of dust-borne contamination on the operators and the equipment entering the dust-controlled space.

The Type C barrier is similar to the Type B except it does not include the airlock vestibule. The effectiveness of the Type C barrier was about half that of the Type B.

The Type D barrier consists of a closed space of undefined dimensions designed for spacecraft assembly with limited access provisions. While it was to be air-conditioned, no particular provision was made to control dust and bacteria. Food was excluded from the work spaces. Vermin infestation was prevented by standard industrial methods.

Procedural Barriers

The procedures to be followed to control spacecraft contamination were to be spelled out in a contamination control procedures document and would be monitored. The three types of procedural barriers (A, B, and C) under consideration for the sterilization process were as follows:

Under Type A procedures, only operators assigned specific functions would be permitted access to the physical barrier of lowest effectiveness; in the inner physical barriers, even fewer people would have access. Only the operators would do housekeeping. Only the equipment required at a particular stage of assembly and testing operations would be permitted inside the physical barrier of lowest effectiveness and only after preparation in accordance with the procedures described in the contamination control procedures document.

Under Type B procedures, all assembly operations would be performed inside sterile enclosures, and absolutely no transfer of material would be allowed. All parts to be assembled would be inside the enclosures, and the contents would be heat-soaked at 125 °C for 24 hours. All assembly operations are performed through a sterility barrier (e.g., neoprene gloves).

Under Type C procedures, to the extent possible, all assembly operations would be performed inside sterile enclosures. Exterior package surfaces (enclosing sterile contents) could be exposed to ethylene oxide inside an enclosure under appropriate conditions to create a sterile field. After sterilization of all exterior package surfaces and the inside of the enclosure, the packages could be opened and the contents assembled.

Operations

Terminal surface sterilization of the spacecraft would involve the following operations:

1) Compartments A and B would be assembled in a sterile manner using the Type C procedures.

2) The tape recorder (original program) would be assembled by the vendor in a manner at least as sterile as the Type B procedures.

3) Access to tools and parts would be restricted. Careful planning would be required to supply all those, and only those, parts and tools required for each operation. The tools and parts would be designed especially for minimizing spacecraft contamination.

4) The operators would be in sterile garb and would follow procedures designed to minimize spacecraft contamination.

5) The exterior surfaces of all wrapping materials would be washed with a sterilized solution. The surfaces and items inside all wrapping would have been sterilized.

6) Bearings would be moved only while in a sterile field. Ethylene oxide sterilization would be sufficient.

7) Before a heat-sterilized item is transported, it would be wrapped and the wrapping filled with ethylene oxide gas. Preferably, all items would be wrapped in a sterility barrier before being placed in the oven, in which case introduction of ethylene oxide into the wrapping will not be necessary.

8) Any radioactive materials (if used) must be sterilized on their exterior surfaces before installation in the spacecraft.

9) Sterile handling of pyrotechnics would be the same as other components, including hoses, connections, propellants, confined spaces, and filters. Contamination of propellants with sterilants would be avoided.

Monitoring and Efficacy

The bacterial and dust content of the air, floor surfaces, and clothing would be monitored in a consistent and timely manner. The monitoring system would signal when failure of the contamination control was

detected. The toxic gas content of the air in occupied working spaces would be monitored continuously, and the use of toxic materials would be audited to assure safe handling.

Table 33 presents an estimate of the odds of achieving each of three objectives. These odds are designed to show relative, rather than absolute, efficacy. Estimates of absolute efficacy must take into account the prevalence of protected spores.

TABLE 33. EFFICACY OF VARIOUS PLANS

Plan	Type of Physical Barrier	Objective	Efficacy
1	A	*	A: 0.7
	B	**	B: 0.95
	D	***	C: 0.999
2	B	*	A: 0.4
	D	**	B: 0.6
		***	C: 0.999
3	A	*	A: 0.1
	D	**	B: 0.5
		***	C: 0.999
4	D	*	A: 0.000
	Alone	**	B: 0.10
		***	C: 0.95

* No more than one spacecraft in ten conveying live cells to the moon.

** No more than 100 live cells on any one spacecraft at launch time.

*** No more than 100,000 live cells on any one Surveyor at launch time.