N67-34813
c. 1

NASA CR 65682

N67-34813

ARDE, Inc.

8642-FR

CHEMICAL METHOD OF URINE VOLUME MEASUREMENT

Contract NAS 9-3904

FINAL REPORT

June 1967

Prepared for the

NATIONAL AERONAUTICS AND SPACE ADMINISTRATION
MANNED SPACECRAFT CENTER
HOUSTON, TEXAS

LIBRARY COPY

AUG 4 1967

MANNED SPACECRAFT CENTER
HOUSTON, TEXAS

Prepared by:

ARDE, Inc.
Paramus, New Jersey

ARDÉ, INC.

Report No. 8642-FR

CHEMICAL METHOD OF URINE VOLUME MEASUREMENT

Contract NAS 9-3904

FINAL REPORT

June 1967

Prepared by:

Paul Petrack
Program Manager

Approved by:

J. D. Zeff, Manager
Life Support Systems

Prepared for the

NATIONAL AERONAUTICS AND SPACE ADMINISTRATION
MANNED SPACECRAFT CENTER
HOUSTON, TEXAS

FOREWORD

The work described in this report was performed by ARDE, Incorporated during the period 17 December 1964 through June 1967, under contract NAS 9-3904, for the National Aeronautics and Space Administration, Manned Spacecraft Center, Houston, Texas.

The program was monitored by Richard S. Serpas, Technical Coordinator, and William Huffstetler, of the NASA/MSC, and conducted for ARDE, Inc. under the direction of Paul Petrack, Program Manager.

Among the ARDE, Inc. personnel who made major contributions to the accomplishment of the program objectives were Robert A. Edwards, Chief Design Engineer; Sidney Wayne, Egon Hirshfeld, and Isaac Siskind, Senior Design Engineers; Alex Peters, Manager of Quality Assurance and Reliability; and Robert Bredimus, James Pearson, and Douglas Dick, Engineering Technicians.

ABSTRACT

A system has been developed and qualified as flight hardware for the measurement of micturition volumes voided by crewmen during Gemini missions. This Chemical Urine Volume Measurement System (CUVMS) is used for obtaining samples of each micturition for post-flight volume determination and laboratory analysis for chemical constituents of physiological interest. The system is versatile with respect to volumes measured, with a capacity beyond the largest micturition expected to be encountered, and with respect to mission duration of inherently indefinite length.

The urine sample is used for the measurement of total micturition volume by a tracer dilution technique, in which a fixed, predetermined amount of tritiated water is introduced and mixed into the voided urine, and the resulting concentration of the tracer in the sample is determined with a liquid scintillation spectrometer. The tracer employed does not interfere with the analysis for the chemical constituents of the urine.

The CUVMS hardware consists of a four-way selector valve in which an automatically operated tracer metering pump is incorporated, a collection/mixing bag, and tracer storage accumulators. The assembled system interfaces with a urine receiver at the selector valve inlet, sample bags which connect to the side of the selector valve, and a flexible

hose which carries the excess urine to the overboard drain connection.

Results of testing have demonstrated system volume measurement accuracy within the specification limits of ±5%, and operating reliability suitable for system use aboard the GT-7 mission, in which it was first used.

TABLE OF CONTENTS

Section	Description	Page
1.0	INTRODUCTION	1
1.1	Background	1
1.2	Program Objectives	3
1.3	Program Organization	5
2.0	CHEMICAL URINE VOLUME MEASUREMENT SYSTEM STUDIES, DESIGNS AND RESULTS	8
2.1	Tracer Substance Investigations and Results	9
2.2	Evaluation of Fluorescent Tracers	12
2.3	Fluorescent Tracer Evaluation & Results	14
2.4	Colorimetric Tracer Analysis	18
2.5	Particle Radiation Tracer Analysis	19
2.6	Evaluation and Test of the Tritium Tracer System	21
2.7	Volume Measurements with Prototype CUVMS (Phase III)	29
2.8	Volume Measurement with Flight Hardware CUVMS (Phase IV)	33
3.0	SYSTEM DESIGN	36
3.1	Phase I - Feasibility, Preliminary Design, and Integration Study	36
3.1.1	Specification and Design Criteria	39
3.1.2	Approaches to Component and System Design	42
3.1.3	Preliminary Design of Urine Volume Measurement Systems	46
3.1.3.1	Type I - Single Removable Mixing/Sample Bag with Tracer Chemical Stored in Bag	47
3.1.3.2	Type II - Two Bag System	53
3.1.3.3	Type III - Two Bag System	60
3.1.3.4	Type IV - Two Bag System	62
3.1.3.5	Type V - Two Bag System	68
3.1.3.6	Type VI - Two Bag System	70

TABLE OF CONTENTS (cont'd.)

Section	Description	Page
3.1.4	Systems Comparison	75
3.1.4.1	System Compatibility & Integration . . .	80
3.1.5	Selection of System for Development . .	81
3.2	Phase II - Design and Fabrication of Mockups	83
3.2.1	Drain Line	83
3.3	Phase III & IV - Design & Fabrication of Prototype & Flight Qualified Systems	85
3.3.1	Selector Valve	89
3.3.1.1	Metering Pump & Check Valve System . . .	89
3.3.1.2	Sampling System	103
3.3.1.3	Selector Valve Handle and Detent	109
3.3.1.4	Selector Valve Internal Design & Flow Testing	112
3.3.2	Collection/Mixing Bag	117
3.3.3	Tracer Storage Accumulator	124
3.3.3.1	Alternative Tracer Storage Accumulator Designs	126
3.3.4	System Weight	136
3.3.5	CUVMS - Urine Transport System Interfaces and GFE Components	137
3.4	Conclusions and Recommendations	143
3.4.1	Conclusions	143
3.4.2	Recommendations	144
4.0	RELIABILITY & QUALITY ASSURANCE	147
4.1	Introduction	147
4.2	Documentation	148
4.3	Preliminary Studies	150
4.4	Mockup and Prototype Phase	155
4.5	Qual. Test & Flight Hardware Phase . . .	166
4.6	Final Flight System Hardware Quality Assurance Activities	174
5.0	BIBLIOGRAPHY	178

LIST OF FIGURES

Figure Number	Title	Page
1	Chemical Tracer Screening Chart	11
2	Calibration Curve - Fluorometric Urine Volume Determination	15
SKD 10030	Early Gemini Urine Transport System	38
SKD 1771	CUVMS - Type I	48
3	Oper. Block Diagram - Type I System	49
SKD 1772	CUVMS - Type II	54
4	Oper. Block Diagram - Types II & III Systems	55
SKD 1773	CUVMS - Type III	61
SKD 1774	CUVMS - Type IV	63
5	Oper. Block Diagram - Types IV & V Systems .	64
SKD 1775	CUVMS - Type V	69
SKD 1776	CUVMS - Type VI	71
6	Oper. Block Diagram - Type VI System	72
7	Mockup - Urine Volume Measurement System . .	84
8	Prototype Components	86
9	CUVMS Selector Valve, Prototype	87
10	Prototype CUVMS	88
11	Selector Valve - Exploded View	90
12	Selector Valve - Exploded View	91
13	Selector Valve - Exploded View	92
SKB 10040	Gemini UTMS Schematic	93
14	Check Valve Seat Configuration	101
15	Check Valve Seats and Balls	102
16	Sample Probe - Cam Lever Configuration . . .	105
17	Sample Probe - Cam Lever Configuration . . .	106
18	Flow Test Setup	113
19	CUVMS Collection/Mixing Bag	121
E 3387	P/O UVMS Assembly, Bag, Collection/Mixing . .	122
20	Accumulators, Gas & Spring Operated	128
E 3453	CUVMS - Total Assembly	139
EC 30108	Assembly - CUVMS Roll-on Urine Receiver . . .	141

LIST OF TABLES

Table Number	Title	Page
1	Tracer Screening Criteria Based on Over-all System Requirements	10
2	Volume Measurement Using 9-Aminoacridine . . .	16
3	Compounds & Physical Properties of Urine . . .	17
4	Tritium Tracer Volume Measurement Accuracy Results Initial Studies	23
5	Volume Measurements of Urine Stored for Various Lengths of Time	26
6	Summary of Initial Volume Measurement Accuracy Determinations at ARDE, Inc. . . .	28
7	Calibration Results Using A Typical Prototype Selector Valve	30
8	Calibration Results Using Prototype Selector Valve and Prototype Collection/ Mixing Bag	31
9	Volume Measurements at WPAFB-AML During Simulator Test	32
10	Flight Hardware Systems Volume Measurement Tests	34
11	Weighted Evaluation Point System	78
12	System Evaluation Summary	79

LIST OF APPENDICES

A Methods of Injecting Solid and Liquid Tracer Chemicals

B Analysis of the Number of Cycles Required for Adequate Mixing When Using Tracer in Sample Bag

C Analyses of CUVMS Alternative Preliminary Designs

D Collection/Mixing Bag Drainage Tests

E Tracer Storage Accumulator Front Seal Tests

F CUVMS Operating Procedures

G Procedure for Selector Valve Tracer Metering Pump Calibration and Determination of Unknown Volumes by Liquid Scintillation Spectrometer Counting Technique

H References to Analytical Methods for Urine Chem.Constituents

SECTION 1

INTRODUCTION

1.1 BACKGROUND

One of the most important problems associated with the manned space program is to learn about the physiological effects of prolonged weightlessness and stress in a zero gravity environment. The program described in this report was initiated to enable an evaluation of possible metabolic changes taken place during Gemini missions 7 up to 14 days duration.

It is necessary to know not only the concentration of various chemical constituents of physiological interest in urine, such as calcium, phosphorous, hormones, etc., but the total amounts of these materials excreted during some standard time period (typically 24 hours). This requires the accurate determination of micturition volume, which with other water intake and output analysis, permits material balances and estimation of differences in metabolism in a space mission environment and normal ground activity.

The accurate measurement of voided urine volumes under conditions existing in orbital flight is extremely difficult by conventional means, and of course, impossible by gravity dependent methods, such as direct collection in a calibrated container. Use of

such devices as integrating flowmeters is restricted by space and power limitations, and by inaccuracies introduced by the necessity for electronic curcuiting, presence of gas bubbles in the urine and foaming, zero point reference requirements and variable flow rates, volumes and micturition pressures.

The solution to the volume measurement requirement described above was provided by the use of a tracer dilution technique. Employment of this method also enabled chemical analysis of crewmen urine samples without interference by the particular tracer substance employed.

The mathematical basis for the technique is simply expressed by the following equation:

$$V_u = \frac{T}{C_T}, \text{ where}$$

V_u = Unknown volume to be determined

T = Total, known ambient of tracer introduced into V_u

C_T = Concentration of tracer in V_u

The fundamental concept of the tracer dilution technique for volume determination leads to the following operational sequence:

a. Initial introduction of an accurately known quantity of an identifiable tracer substance into the unknown volume.

b. Uniformly mixing the tracer into the total volume.

c. Taking a sample of the mixture.

d. Measuring the concentration of tracer in the sample.

e. Calculating the original volume from the measured concentration.

1.2 PROGRAM OBJECTIVES

The implementation of the tracer dilution technique required study of the feasibility of the basic approach and of various system concepts, and the design, development, fabrication, evaluation, test and delivery of 2 system mock-ups, 5 prototype systems and 6 flight configuration Chemical Urine Volume Measurement Systems (CUVMS), of which, 2 latter systems were to be subjected to qualification testing, and 4 delivered as flight qualified hardware systems.

The technical objectives for the CUVMS were as follows:

a. Measurement of individual crewman micturition volumes with a system accuracy better than ±5% during use by two men for 14 days.

b. Acquisition of individual crewman urine samples from each micturition of up to 100 ml quantity, for subsequent determination of total volume and analysis of the chemical constituents of physiological interest. The volume determinations and chemical analyses were to be performed post-flight in a ground laboratory.

c. The tracer material used for volume determination should not interfere with the chemical analysis of the urine.

d. Integration of the CUVMS into the Gemini Urine Transport System (UTS) without affecting its overall function.

e. Minimum system volume and weight.

f. Compatible with urine, the spacecraft cabin and orbital space environments.

g. Minimum system complexity.

h. Minimum crewman operations.

i. No electrical power supply requirements.

j. Operable while wearing a Gemini type pressure suit.

k. Fail safe operation in conjunction with Gemini UTS requirements and spacecraft cabin environment.

l. Maximum attainable reliability.

m. Operation at 0-gravity.

n. Operation and accuracy unaffected by entrained gases.

o. No toxic or fire hazards in the 100% O_2 cabin environment.

1.3 PROGRAM ORGANIZATION

Implementation of the program effort was divided into four phases. These phases and their main tasks were as follows:

Phase I - Feasibility, Preliminary Design and Integration Study

1. Tracer system mechanical design concepts.

2. Tracer material evaluation and selection.

3. Tracer systems-Gemini UTS integration studies.

4. Tracer system schematics and preliminary design layouts.

5. Analysis of alternative systems including system reliability studies.

6. Selection of system for continued development.

Phase II - Fabrication of Volume-Shape-Weight System Mock-ups

1. Detail layout of mock-up.

2. Fabrication and delivery of two system mock-ups.

Phase III - Detail Design and Fabrication of Operational Prototype

1. Detail design of prototype CUVMS.

2. Procurement and fabrication of system parts and components.

3. Assembly of systems.

4. System performance tests and design validation.

5. Delivery of prototype systems to NASA-MSC.

Phase IV - Final Design, Fabrication and Qualification Testing of Flight Hardware

1. Final detail design of flight CUVMS hardware.

2. Procurement and fabrication of system parts and components.

3. Assembly of flight systems for qualification tests and mission use.

4. Acceptance testing.

5. Qualification testing.

6. Delivery of flight qualified systems to NASA, including Quality Assurance and Reliability documentation.

7. Final Report

Although each phase had specific goals which logically led to the next portion of the overall program, there was much overlap due to schedule requirements and also resulting from a program acceleration which was initiated during Phase III, in order to meet deadlines imposed by the Gemini flight schedules for the GT-6 and GT-7 missions.

SECTION 2

CHEMICAL URINE VOLUME MEASUREMENT SYSTEM STUDIES, DESIGNS AND RESULTS

The work performed in this program initially required two main avenues of investigation:

1. Study, selection and evaluation of a suitable tracer substance.

2. Preliminary mechanical system design studies for hardware to utilize the tracer substance of choice and fulfill the required functions of the CUVMS in conjunction with the Gemini Urine Transport System.

Advantage was taken from the beginning of the premise that both goals could be pursued simultaneously and relatively independently, as an immediate study led to the conclusion that the tracer substance in liquid form would provide the best combination of properties for storage and metering in the system. A summary of this study is included in Appendix A. With this decision, work was begun to provide preliminary design configurations for evaluation and selection of a suitable basic mechanical system for ultimate refinement into flight hardware. The tracer substance efforts in this program extended into Phase III, and are described in the following section. The mechanical system work is discussed thereafter.

2.1 TRACER SUBSTANCE INVESTIGATIONS AND RESULTS

The technical objectives of the program, the employment of the tracer dilution technique for urine volume measurement and the restraints imposed on the CUVMS by the necessity for integration into the Gemini UTS provided a basis for a tracer screening procedure which considerably narrowed the number of candidate materials and which led to preliminary selection of a few substances for preliminary evaluation. The tracer screening criteria based on over-all system requirements are given in Table 1. The screening criteria and parameters used for assessing the usefulness of various analytical techniques for determining tracer concentration are summarized in Figure 1.

Use of this screening technique led to the elimination of all but the three most promising analytical techniques considered potentially applicable to tracer concentration determination. These were:

1. Color
2. Particle radiation
3. Spectral analysis (absorption or emission)

The use of radiation measurements was discarded initially because of concern about possible health hazard and the question of attainable accuracy.

Colorimetric analysis was considered, but considered questionable with respect to analytical accuracy and interference

TABLE 1

TRACER SCREENING CRITERIA BASED ON OVER-ALL SYSTEM REQUIREMENTS

The Tracer:

(a) Must be completely miscible with urine

(b) Must be uniformly distributed in the urine

(c) Must mix quickly with the total volume voided, with limited agitation

(d) Must not react with urine constituents which are to be analyzed

(e) Must not interfere with the chemical analysis of the urine

(f) Concentration determination must not be interfered with by urine components

(g) Analysis accuracy must meet system requirements

(h) Must be stable during storage and use

(i) Must be non-toxic and safe to handle

(j) Quantity requirement should be small, to minimize weight and volume requirements

(k) Should be dispensable in accurately known quantities

(l) Must be compatible with materials used in the UTS

(m) Must not present a fire hazard

(n) Must not react to form a gas or solid after solution in the urine

(o) Should be readily available

CHEMICAL TRACER SCREENING CHART

DEROGATORY FACTORS / TRACER MEASUREMENT CHARACTERISTICS	COLOR	SPECIFIC GRAVITY	CONDUCTIVITY (ELECTRICAL OR THERMAL)	PH	OSMOTIC PRESSURE	VISCOSITY	PARTICLE RADIATION (BETA)	DIELECTRIC CONSTANT	FREEZING POINT	STABLE ISOTYPE	BOILING POINT	SPECIFIC CHEMICAL REACTION FOR DESIRED COMPONENT	SPECTRAL ABSORPTION	SPECTRAL EMISSION	REFRACTIVE INDEX	ELECTRODE POTENTIAL OR REACTIONS	SURFACE TENSION	MAGNETIC PROPERTY	OTHER OPTICAL PROPERTIES	VAPOR PRESSURE
RINE PROPERTIES INTERFERE	?	●	●	●	●	●		●	●	●	●	?	?	?	●	●	●		●	●
ITERFERES WITH RINE ANALYSIS	?	●		●	●							?	?	?						
NSUFFICIENT NALYSIS ACCURACY	?			●	●	●	?		●	●	●				?		●	●	●	●
ISTRUMENTATION ROBLEMS (INCL. VAILABILITY)					●			●	●	●						●		●	●	●
OMPLICATED NALYTICAL TECH.										●								●		●
ARGE TRACER EQUIREMENT		●		●	●	●		●	●	●	●	●			●		●			●
INDESIRABLE RACER PROPERTIES		●			●		?													

● = NOT DESIRABLE FOR USE IN URINE VOLUME MEASUREMENT SYSTEM

FIGURE 1

with some of the analyses for urine constituents, which are performed with this technique.

The initial choice for the tracer analysis method was a spectral technique, in particular photo-fluorometry. This choice was based on the sensitivity of the method, which can detect certain fluorescent substances at concentrations below 1 part per billion. In addition, the technique lends itself to differential analysis by means of optical filters, thus reducing interference from some urine constituents which are naturally fluorescent.

2.2 EVALUATION OF FLUORESCENT TRACERS

Two substances were selected for laboratory testing to determine their usefulness as tracers with the CUVMS. These materials, quinine and 9-aminoacridine were chosen (from a list of many fluorescent chemicals), because of the following desirable properties:

1. Both chemicals are highly fluorescent. (Quinine in particular has the highest fluorescence known, and can be detected at a concentration of 0.1 part per billion.)

2. Analytical techniques for both substances are well delineated, having been studied for many years, particularly in biological systems, including urine specimens.

3. Both substances are extremely stable over the temperature range to be encountered (65°F-95°F in use, 0-200°F test).

4. Both substances are non-toxic in the maximum quantities required.

5. Both substances are readily available at low cost in high purity.

These materials are both solids in the temperature range of interest, and it was necessary to find a solvent system which would also be compatible with mission environment and objectives.

The Gemini UTS storage space limitations forced restriction of the total amount of tracer solution to a maximum volume of 60 milliliters, which, with a safety factor of 19% (the program specification being 168 micturitions for two men during a 14-day period), allowed the use of 200 tracer quantities of 0.3 ml each, and this tracer volume was used for all tests and final system operation. Distilled water alone could not be used as the tracer carrier solvent, because of limited solubility and below freezing system test temperatures. It was decided to use a mixture of 50% water-50% propylene glycol as the tracer solvent, since this composition had the following desirable properties.

1. Propylene glycol is non-toxic, and in fact, is ingestible and used in many food products.

2. Both tracer substances have a high solubility in the solvent mixture.

3. Water and propylene glycol are miscible in all proportions.

4. The freezing point of the solvent solution is -24°F, well below the minimum test temperature.

5. Propylene glycol has a low vapor pressure, reducing any possible loss of solvent at high test temperatures.

6. Propylene glycol meets the other over-all system tracer screening criteria listed in Table 1.

2.3 FLUORESCENT TRACER EVALUATION AND RESULTS

Based on the established sensitivity of the fluorometric analysis technique, stock tracer solutions were prepared, containing 100 mg of 9-aminoacridine-hydrochloride in 100 ml 50% propylene glycol-50% water (V/V), and 100 mg Quinine Sulphate in 100 ml of solvent.

Preliminary tests for volume measurement accuracy using the fluorometric technique were made by preparing standard curves of intensity versus tracer concentration. A typical calibration curve for 9-aminoacridine is shown in Figure 2. Early volume determinations using these tracers, over a range of 75 ml to 470 ml of urine gave the following results.

FIGURE 2

Calibration Curve

Fluorometric Urine Volume Determination

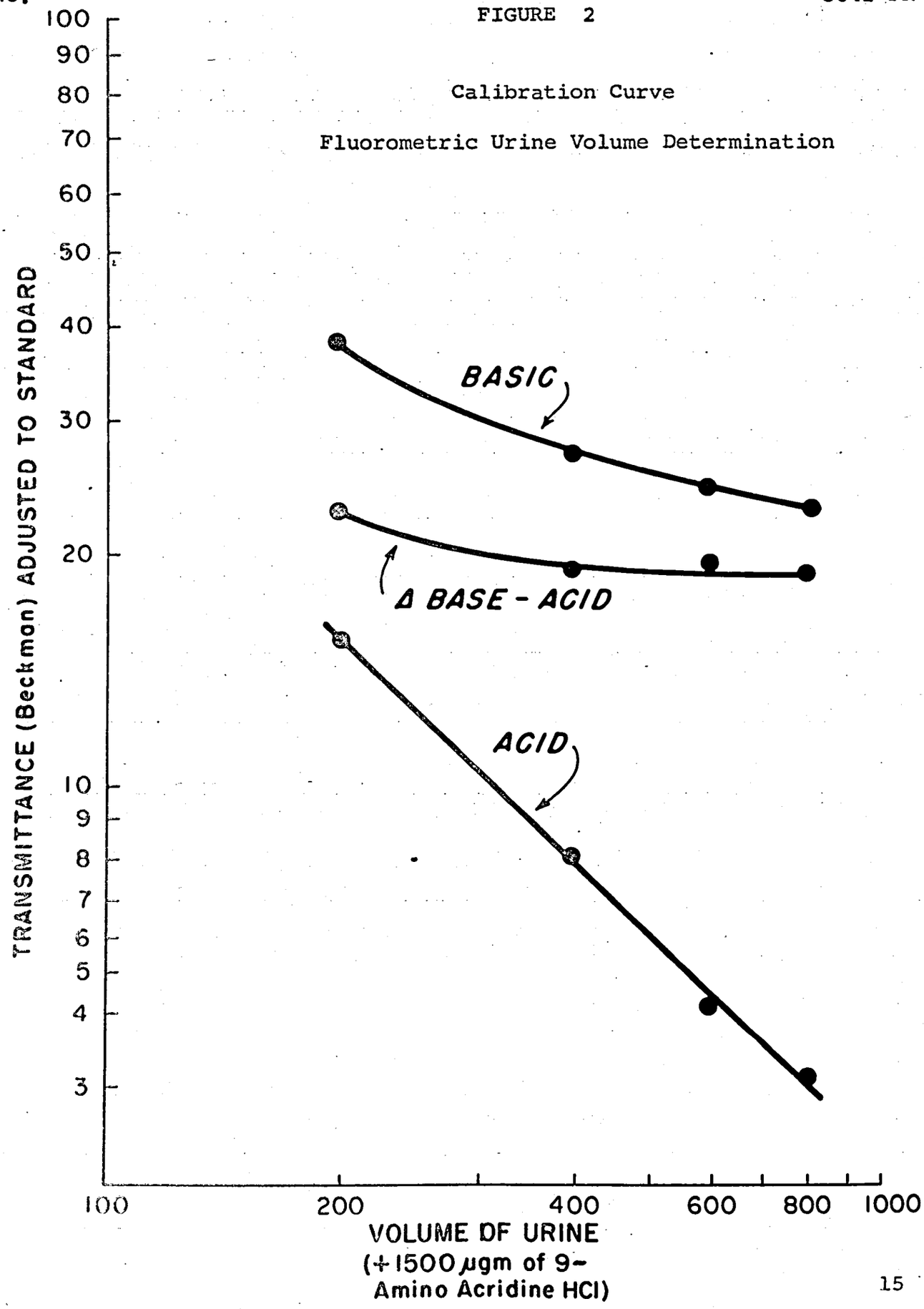

TABLE 2 VOLUME MEASUREMENT USING AMINOACRIDINE

Actual Urine Volume, ml	Measured Volume, ml		% Error	
	9-Amino-acridine (9-a-a)	Quinine (Q)	(9-a-a)	(Q)
59	60	60	+1.7%	+1.7%
75	80.5	75	+7.3	0
78	75	75	-3.8	-3.8
150	150	152	0	+1.3
155	152	155	-1.9	0
210	205	205	-2.4	-2.4
470		475		+1.1

The results shown in Table 2 were very encouraging, although it was apparent that further work was required to refine the analytical technique to reduce the spread of measured values. Since these were laboratory determinations performed under controlled conditions, the errors shown, when combined with the mechanical system errors which could be introduced by tolerances, variations in operating conditions and environment, might become greater than the over-all CUVMS accuracy specification limits of ±5%.

Concurrent with these volume measurement tests, the question of possible tracer interference with the chemical analysis of urine constituents was being investigated. The compounds and physical properties of urine listed in Table 3 were considered by NASA as having physiological significance. These compounds were analyzed in urine, in the presence of (1)

propylene glycol, (2) propylene glycol plus quinine, and (3) propylene glycol plus 9-aminoacridine. Each glycol solution was used in the concentration that would be present as tracer constituents. Table 3 also summarizes the results of these interference tests.

TABLE 3 COMPOUNDS AND PHYSICAL PROPERTIES OF URINE

Component	Concentration			
	Control	Propylene Glycol	Propylene Glycol Quinine	Propylene Glycol 9-Amino-acridine
Calcium (mg %)	15.6	15.8	16.2	15.8
Phosphorus (mg %)	91.5	83.0	84.0	84.5
Magnesium (mg %)	6.2	5.9	6.2	6.3
Sodium (mg %)	267.0	283.0	294.0	281.0
Potassium (mg %)	106.0	110.0	110.0	106.0
Total Nitrogen (g/l)	7.0	6.8	7.3	6.7
Creatinine (mg %)	96.7	96.2	95.3	93.7
17-Hydroxycorticos-teroids (mg/l)	16.6	15.2	14.7	43.0
Chloride (meq/l)	123.0	121.0	123.0	124.0
Bicarbonate (meg/l)	(All too low to report.)			
Epinephrine & Norepinephrine (microg/100 ml)	6.0	7.6	14.4	940.0
Urea (mg %)	425.0	425.0	400.0	350.0
Alpha-Amino Nitrogen (mg/l)	272.0	258.0	246.0	204.0
Hydroxyproline (g/l)	1.07	0.98	1.07	0.98
Uric Acid (mg %)	32.4	30.4	32.7	31.4
Osmolarity (osmols)	574.0	559.0	566.0	601.0
pH	6.0	6.0	5.6	4.5
Specific Gravity	1.018	1.012	1.017	1.017

Examination of the data shown in Table 3 made it apparent that:

A. The use of propylene glycol in the tracer solvent would not interfere with the chemical analysis of the urine constituents. The effect of propylene glycol in all cases is within the limits of accuracy for the clinical analytical methods used.

B. Both quinine and 9-aminoacridine interfere seriously with the analysis for some of the more important urine constituents, in particular, the hormones (17-hydroxycorticosteroids), catecholamines (epinephrine and norepinephrine), and alpha-amino-nitrogen.

2.4 COLORIMETRIC TRACER ANALYSIS

As soon as it became apparent that an extensive and prolonged effort might be required to overcome these analytical difficulties, work on several alternative tracer material approaches was started.

The first was an attempt to find an accurate analytical method for propylene glycol itself, since it would provide a simplified tracer. However, the use of colorimetric, volumetric and gas chromatographic analytical procedures which are available do not provide enough accuracy, and this approach was discarded.

A colorimetric method using Phenolsulfonphthalein indicator was evaluated. Here again, the analytical accuracy was not sufficient to meet the system requirements.

2.5 PARTICLE RADIATION TRACER ANALYSIS

A detailed investigation of the use of a low energy, weak beta particle emitting radioactive isotope, tritium (H^3), in the form of tritiated water, was made, with heavy emphasis on evalutating possible health hazards and effects on crew safety. The possibility of using a C^{14} compound, which is also widely used in biochemical research, was considered as a possible back-up candidate. However, the properties of tritium are such that health and safety hazards are non-existent in the concentrations and conditions of use in the CUVMS. These properties may be outlined as follows:

1. Tritium emits ultrasoft beta particles only, with a maximum energy of 0.018 mev. This is the lowest energy of any isotope.

2. The beta emission from tritium is stopped by materials of a density of about 200 micrograms per square centimeter. As an example, this stopping power is amply provided by ordinary paper 0.003 inch thick.

3. The maximum permissible body burden for tritium is 1 millicurie, and no more than this amount would be required for a complete mission system, so that even

under the very unlikely event of total ingestion of the entire CUVMS tracer quantity, there would be no health hazard.

4. Possession and use of tritium is permissible without AEC license in up to 10 quantities of 250 microcuries each (up to 2.5 millicuries total). This is a larger permissible amount than any other isotope; for example, five times more than for carbon 14.

5. Contact of the skin with tritiated water, in which form the material would be used, poses no hazards, since the emission could not penetrate into the body. Such contact would not occur anyway, since the tracer solution would always be totally enclosed within the CUVMS.

6. Since the beta emission from tritium is so weak, is stopped so easily, (and would be totally enclosed within the CUVMS), it would have no effect on any other mission experiments.

These considerations led to volume measurement accuracy evaluation using tritiated water as the tracer substance. It was believed that the emission level of tritium, even though low in energy and diluted by the urine, could still provide a high accuracy in the determination of volume. For example, 0.3 ml of tracer, containing a nominal activity of 14 microcuries per ml, diluted by 500 ml of urine, would give almost

2,000 counts per minute using a modern Liquid Scintillation Counter. This instrumentation is readily available, and provides counting accuracies within ±1%. Thus, using counting times of ten minutes per sample to provide a statistical accuracy of about ±1%, led to the conclusion that volume measurement, including the CUVMS tolerances, could readily be performed within the required over-all accuracy of ±5%.

Other considerations involved in the use of tritium were the possibliity of induced background radiation in the urine samples during the mission, and naturally occurring background radiation in normal urine. In the first case, available information indicated that this effect is negligible, and in the second, normal urine was known to have background radiation of approximately 7 counts per minute, less than 0.35% of the minimum expected mission sample counts.

Another important advantage of using tritium for the CUVMS tracer was that no possibility existed for interference with the chemical analysis of the urine, since the tracer substance itself would be water.

2.6 EVALUATION AND TEST OF THE TRITIUM TRACER SYSTEM

The suitability of the use of tritiated water as the tracer substance was determined in a two part effort.

1. Laboratory demonstration of the accuracy of volume measurement using tritium - This work involved the

use of established liquid scintillation counting techniques for measuring tritium concentration in samples from known volumes of water (as a completely non-interfering substance, for initial feasibility studies) and urine (as the actual liquid to be measured). As a result of these experiments, it was found necessary to refine standard beta particle counting techniques to develop methods which gave analytical results with accuracy better than ±2%.

2. The use of 50% water-50% propylene glycol tracer solution containing a nominal tritiated water activity of 14 microcuries per ml with the complete CUVMS, to establish an operational over-all system urine volume measurement accuracy better than ±5%.

The initial volume measurement accuracy studies were performed by outside laboratories, while ARDE was waiting for the installation of a Packard Instrument Company Model 3314 Liquid Scintillation Spectrometer in its own facility.

The results obtained by the outside laboratories ranged from encouraging, but not precise enough for the program requirements, to demonstration of volume measurement determination within the ±2% accuracy requirement established for the analytical procedures.

Table 4 summarizes the laboratory volume measurement results

TABLE 4

TRITIUM TRACER VOLUME MEASUREMENT ACCURACY RESULTS INITIAL STUDIES

		Volume Calculated by Tritium Tracer Dilution Method									
	Pre-Measured Volume	Fresh Urine	Percent Error	After 24 hr. Storage	Percent Error	After 48 hr. Storage	Percent Error	After 6 days Storage	Percent Error	After 14 days Storage	Percent Error
Lab #1	100 ml	94.1 ml	-5.9%			92.4 ml	-7.6%			92.5 ml	-7.5%
	100	93.2	-6.8			98.8	-1.2			103.8	+3.8
Lab #2	100	95.8	-4.2	101.6 ml	+1.6%						
	100	97.6	-2.4	101.4	+1.4						
Lab #1	350	338	-3.4			344	-1.7			352	+0.6
	350	341	-2.6			344	-1.7			342	-2.3
Lab #2	350	342	-2.3	368	+5.1			357 ml	+2.0%		
	350	336	-4.0	359	+2.6			335	-4.3		
Lab #1	600	525	-12.5			588	-2.0			590	-1.7
	600	535	-10.8			590	-1.7			612	+2.0
Lab #2	600	600	0	622	+3.7						
	600	575	-4.2	595	-0.8						

obtained from the first two laboratories employed in this feasibility study.

Examination of the results shown in Table 4 indicated that the manipulative techniques involved in measurement of tritium tracer concentration (including the necessary use of pipettes of only 10 lambda (10 microliter) capacity). The data also indicated that the change in urine properties during the 14-day room temperature storage period, including the formation of voluminous precipitate in some samples, did not introduce any systematic error into the volume determination. It was decided to utilize the services of a third laboratory to refine the measurement techniques and investigate other parameters (such as the effect of tritium beta particle counting time) relating to the statistical accuracy of the liquid scintillation counting technique.

This last outside volume measurement accuracy investigation was conducted using 250 ml volumes only, as the installation of ARDE's facility was then underway, and it was found very quickly that there were two extremely impportant techniques required to provide the basis for accurate analysis of tritium concentration. These were:

1. The necessity for precise calibration of the 10 lambda pipettes used for introducing the reference "spike" of tritiated tracer solution into the tracered sample of the unknown urine volume. This calibration was performed by successive deliveries and weighings of the volume delivered by the pipette,

done by the technician who would perform the actual measurements. This was necessary, since the pipettes are of the "blow-out" type, and reproducibility of better than ±0.5% was obtained by one individual using a particular pipette, but greater than ±1% from user to user for a given pipette. The pipettes also required an "absolute" calibration because the actual delivery volume could vary as much as ±5% from the nominal value, as received.

2. The usual sequence in use of radioactive solutions is to pipette the tracer into a counting vial and then add the scintillation fluid. It was determined that this sequence had to be reversed, because evaporation of a small amount (but a significant percentage) of the 10 lambda tracer "spike" took place before the scintillation fluid was added. The addition of the tracer solution to the scintillation fluid prevented this evaporation, since the tracer was immediately diluted by the amount of scintillation fluid used (10 ml).

Table 5 gives volume measurement results obtained using these techniques.

The data presented in Table 5 showed the excellent accuracy and reproducibility of the analytical technique as a method of measuring urine volumes. The urine samples used for these measurements had markedly deteriorated during the test period, with extreme darkening and voluminous precipitation. This

TABLE 5

VOLUME MEASUREMENTS OF URINE

STORED FOR VARIOUS LENGTHS OF TIME

	Calculated Volumes							
Pre-Measured Volume (ml)	Fresh Urine (ml)	Percent Error	After 3 days Storage (ml)	Percent Error	After 7 days Storage (ml)	Percent Error	After 14 days Storage (ml)	Percent Error
250	250.5	+0.2%	256	+2.4%	248	-0.8%		
250	253	+1.2	254	+1.6			245	-2.0%
250	250	0	253	+1.2	247	-1.2%		
250	252.5	+1.0	256	+2.4			251	+0.4

had no effect on the accuracy of volume determination, which is one of the favorable features of this measurement technique.

The next volume measurements were made at ARDE, Inc., in the newly established facility. In order to become familiar with the analytical procedures and techniques, a series of 23 water volumes were measured, each volume measured by averaging results from three sample aliquots. The maximum deviations of the calculated from the actual volumes tested (over a range of 100 ml to 500 ml) were +2.0% and -2.0%. The importance of pipette calibration was demonstrated by the data obtained with three pipettes of 0.5 ml nominal delivery (used for sample aliquots) for which the actual delivered volumes ranged from -1.8% to -1.4% deviation from the nominal, and for 3 ten lambda pipettes, (.010 ml) for which the deviations from nominal were between -5.4% and -1.5%. A summary of these data is presented in Table 6.

TABLE 6

SUMMARY OF INITIAL VOLUME MEASUREMENT ACCURACY DETERMINATIONS AT ARDE, INC.

Actual Volume	Calculated Volume	Per cent Error
250 ml	250.6 ml	+0.2%
250	248.7	-0.5
250	248.8	-0.5
250	251.4	+0.6
250	245.1	-2.0
100	100.3	+0.3
100	100.7	+0.7
100	100.9	+0.9
100	100.6	+0.6
100	100.9	+0.9
100	101.4	+1.4
100	100.7	+0.7
100	101.0	+1.0
500	509.4	+1.8
500	496.2	-0.8
500	500.8	+0.2
500	502.1	+0.4
500	501.6	+0.3
500	501.3	+0.3
500	509.6	+1.9
500	504.1	+0.8

2.7 VOLUME MEASUREMENTS WITH PROTOTYPE CHEMICAL URINE VOLUME MEASUREMENT SYSTEMS (PHASE III)

The tracer metering pump in the selector valve of the CUVMS was designed to inject 0.3 ml (nominal) of tracer solution into the urine flow passage, to be mixed with the urine and transferred to the collection/mixing bag during micturition. The first step therefore necessary to (1) determine the exact amount of tracer injected into the system, since this amount would be affected by design and manufacturing telerances, and (2) determine the reproducibility of the metered tracer volume from operating cycle to cycle, was to calibrate the tracer metering pump.

This was accomplished by introducing a series of different known volumes into the inlet of the selector valve, over the range of anticipated micturition volumes. Subsequent beta counting of samples of each of these volumes would give the actual tracer volume calibration value for that valve, and show the reproducibility of the tracer metering mechanism as well as the effect of the small and constant fluid hold-up in the valve passages between operations. The calibration results for a typical prototype selector valve are given in Table 7.

TABLE 7

CALIBRATION RESULTS

USING A TYPICAL PROTOTYPE SELECTOR VALVE

Test Volume	Calculated Tracer Delivery	Percent Deviation from Average
100 ml	0.308 ml	+3.0%
100	0.295	-1.3
500	0.301	+0.7
500	0.301	+0.7
250	0.291	-3.0
100	0.300	+0.3
500	0.299	0
100	0.296	-1.0
250	0.302	+1.0
Average	0.299 ml	

The reproducibility of the system calibration values is seen to fall well within the requirements of the program, and the average tracer delivery calibration value of 0.299 ml for this selector valve is only 0.3% less than the design figure. The maximum deviation from the design value for any of the five prototypes was -4.7% (0.286 ml).

Table 8 gives the results of a series of volume measurements made with a prototype system, using the tracer calibration value for that system as determined by the method described above. In this case, the calibration value was 0.307; the volume measurements were made with a complete CUVMS, including the prototype collection/mixing bag which introduces an additional system error due to the residue (1-2 ml) left behind after the system was vacuum drained.

TABLE 8

CALIBRATION RESULTS
USING PROTOTYPE SELECTOR VALVE
AND PROTOTYPE COLLECTION/MIXING BAG

Actual Volume	Calculated Volume	Per cent Error
500 ml	510.5 ml	+2.1%
500	499.5	-0.1
500	500.5	+0.1
100	100.2	+0.2
100	99.5	-0.5
250	253.3	+1.3
250	247.3	-1.1
500	499.5	-0.1
100	96.9	-3.1
250	259.3	+3.7
500	486.0	-2.8

During the final phase of the program, a prototype CUVMS was used by two subjects in a space simulator run at Wright Patterson Air Force Base Aerospace Medical Research Laboratories. Prior to this experiment, the CUVMS was checked for volume measurement accuracy by WPAFB personnel, using the analytical techniques developed at ARDE. The results of these system volume measurements are presented in Table 9.

When the system was actually used in the simulated mission, 94 micturition samples were taken before a minor mechanical problem developed with the prototype system. Of the 94 measurements, 86 were within the desired system accuracy of ±5%, and the balance only slightly higher.

TABLE 9

VOLUME MEASUREMENTS AT WPAFB-AML DURING SIMULATOR TEST

Actual Volume	Calculated Volume	Per cent Error
100 ml	100.45 ml	+0.45%
200	205.30	+2.15
300	294.20	-1.90
400	416.0	+4.00
500	513.0	+2.60

2.8 VOLUME MEASUREMENTS WITH FLIGHT HARDWARE CHEMICAL URINE VOLUME MEASUREMENT SYSTEMS (PHASE IV)

During the period that prototype CUVMS hardware was being fabricated, final design and fabrication of flight systems were being implemented. The original flight hardware configuration was essentially that of the prototype systems. However, at NASA request, certain modifications were made which tended to increase the possibility of system accuracy degradation. These modifications included enlarging the urine flow passages in the selector valve and changing the collection/mixing bag configuration, leading to higher system urine holdup residues, with concomitant dilution or increase of tracer concentration in the urine from the next following micturition. As it turned out, however, system accuracy was maintained within the specification. A summary of the Pre-Delivery Acceptance Test volume measurement results for the qualification test systems (S/N 6 and S/N 7), and the final flight hardware delivered and used in the Gemini GT-7 mission (systems S/N 9 and S/N 11), and for use in subsequent missions (systems S/N 8 and S/N 10) are given in Table 10.

Data in Table 10 also shows that over-all CUVMS operation combined with the analytical procedures used for volume determination met the required program objectives.

TABLE 10

FLIGHT HARDWARE SYSTEMS VOLUME MEASUREMENT TESTS

CUVMS Serial Number	Actual Volume	Calculated Volume	Per cent Error
6	284.5 ml	284.8 ml	+0.1%
	477	459.7	-3.6
	206	202.6	-1.7
	642	632.2	-1.5
	155.5	161.9	+4.1
	331	324.7	-1.9
7	740 ml	717.9 ml	-3.0%
	405	408.6	+0.9
	305	309.2	+1.4
	500	494.8	-1.1
	230	235.4	+2.3
	166	171.2	+3.0
8	400 ml	415.2 ml	+3.8%
	600	616.1	+2.7
	350	367.6	+5.0
	150	155.9	+3.9
	100	97.8	-2.2
	500	510.5	+2.1
9	600 ml	573.8 ml	-4.4%
	400	400.4	+0.1
	150	148.5	-1.0
	350	333.9	-4.6
	100	99.8	-0.2
	250	243.4	-2.6

TABLE 10 (Continued)

CUVMS Serial Number	Actual Volume	Calculated Volume	Per cent Error
10	620 ml	606.3 ml	-2.2%
	180	177.9	-1.2
	220	218.9	-0.5
	350	345.6	-1.3
	750	735.7	-1.9
	150	156.9	+4.6
11	600 ml	580.1	-3.3%
	500	490.6	-1.9
	400	399.9	-0.02
	350	342.8	-2.1
	250	252.9	+1.2
	100	99.4	-0.6

SECTION 3

SYSTEM DESIGN

3.1 PHASE I - FEASIBILITY, PRELIMINARY DESIGN, AND INTEGRATION STUDY

The utilization of the tracer dilution technique for measurement of urine volumes required the establishment of a sequence of operations for a hardware system. The steps in this sequence are as follows:

1. Introduction of a fixed, accurately known quantity of the tracer substance into the total unknown volume.

2. Uniform solution of the tracer into the volume.

3. Taking a sample of the mixture.

4. Disposal of the excess urine, leaving the system ready for the next use cycle.

These four requirements had to be incorporated into a system that would be compatible with the existing Gemini Urine Transport System (UTS). The system was to fully integrate into the Gemini UTS without major changes, and permit operation by the crewmen while wearing Gemini type spacesuits with gloved hands.

The existing Gemini UTS with which the ARDE system was to interface is shown in drawing SKD 10030. A brief description of this system is necessary to appreciate the various

alternate designs considered, and the factors resulting in a final design approach.

Referring to drawing SKD 10030, the three basic elements comprising the system are the urine receiver, a urine sampling device, and a combination reservoir and pumping assembly. The urine receiver was designed to receive the penis and provide a seal by means of a small hand pump used to build up pressure in an internal flexible liner. Release was effected by a manually operated relief valve. During micturition, after opening a shut off valve on the down stream end of the urine receiver, the urine flowed directly through the sampling device into the reservoir and bellows. The valve was then closed and the height of the bellows was used as an indication of the volume of the micturation. A sample bag was then attached and a sample taken through a stainless steel probe, which pierced a silicone rubber seal in the neck of the bag. After sampling, the excess urine was dumped into space by opening the main shut-off valve and pumping the urine overboard by use of the bellows. This system allowed severe accuracy limitations in measuring the bellows height, holdup in the line, and air in the system, and ARDE was required to continue to use the bellows, but only for expulsion of the excess liquid. Volume would be measured by the tracer dilution method.

REVISIONS					
E.O. NO.	SYM	ZONE	DESCRIPTION	DATE	APPROVED

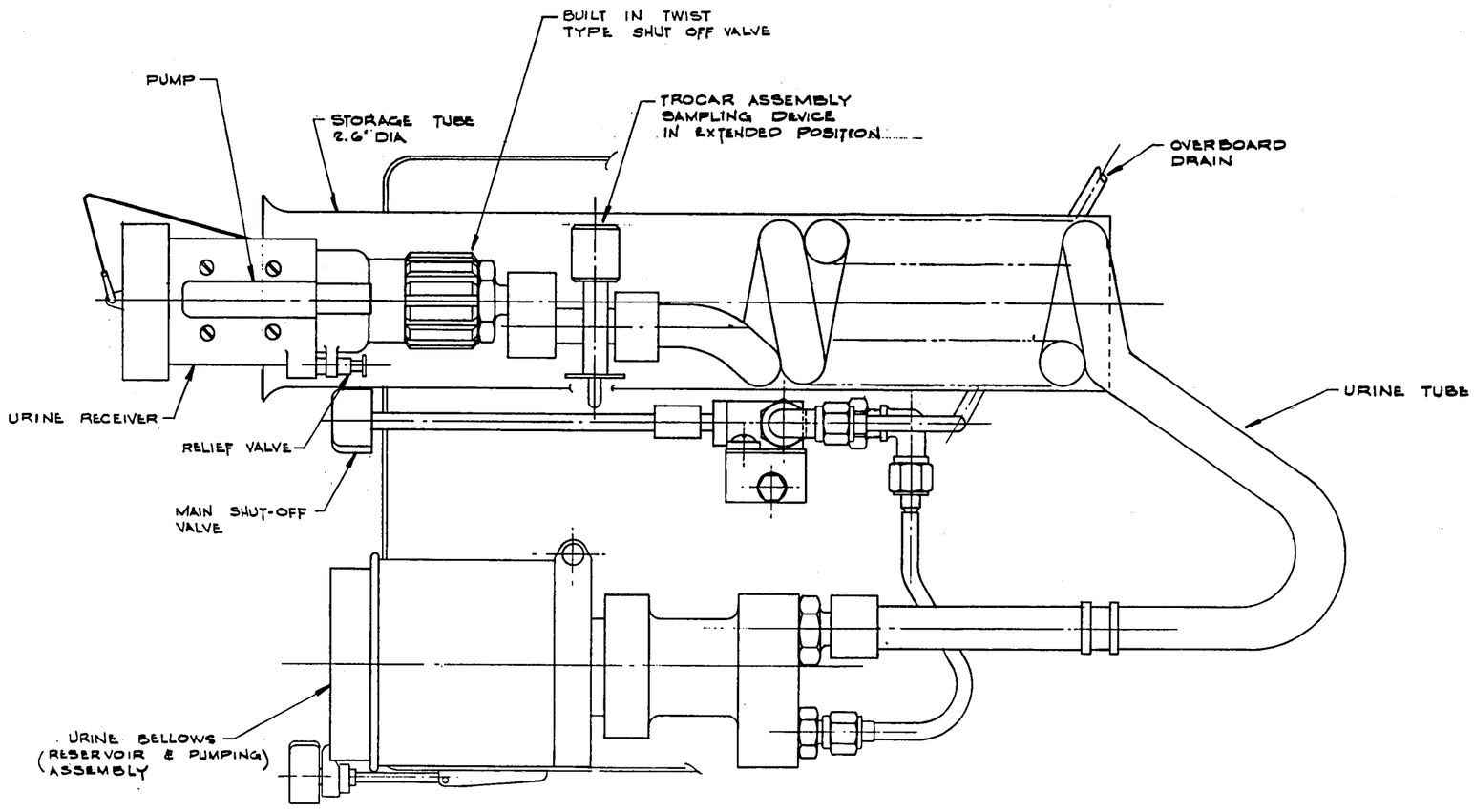

QTY REQD PER DASH NO.				ITEM NO.	CODE IDENT	PART OR IDENTIFYING NO.	NOMENCLATURE OR DESCRIPTION	MATERIAL	SPECIFICATION

LIST OF MATERIAL OR PARTS LIST

UNLESS OTHERWISE SPECIFIED
DIMENSIONS ARE IN INCHES
TOLERANCES
X = ± .030 .XX = ± .010 .XXX = ± .005
ANGULAR ± 30'
BREAK SHARP EDGES .003 .015
ALL SMALL FILLETS .020 DAOR
THREADS PER FED HNDBK H 28 AND SUPPLEMENTS
DIMENSIONING PER MIL STD 8
WELD SYMBOLS PER JAN-STD-19
SURFACE ROUGHNESS SYMBOLS PER MIL STD 10
ALL FINISHED SURFACES 125 ✓

NEXT ASSEMBLY

DRAWN BY	
CHECKER	
STRESS ENG'R	
AERO THERMO	
DES. ENG'R	
PROJ. ENG'R	

ARDÉ, INC.
PARAMUS, N. J.

TITLE EARLY GEMINI URINE TRANSPORT SYSTEM (Mc DONNELL DWG #52-019990)

CODE IDENT NO. 05980 | SIZE D | SKD 10030

SCALE 1 | SHEET

3.1.1 Specifications and Design Criteria

The initial step required for the formulation and evaluation of proposed CUVMS design concepts was the establishment of a set of design criteria. These criteria were intended to be user-oriented and were purposefully generalized in order not to inhibit creative design activity. Some of the criteria were specifically dictated by the Statement of Work, while others were based on logical requisites for good mechanical design and engineering, human factors, and functional and biological considerations to achieve mission objectives.

The design criteria, system requirements and restraints were as follows:

1. Volume of urine: 600 ml maximum
2. Urine flow rate: 45 ml/sec. maximum
3. Minimum number of samples: 168
   (NOTE - Based on 2 men x 14 day mission x 6 micturations/day.)
4. Nominal sample size: 100 ml
5. Volume limitation: Must fit within the 2.6" I.D. UTS storage tube shown on McDonnell Aircraft Co. drawing 52-019990, and interface between the urine receiver and the inlet to the coiled urine tube. (See drawing SKD 10030.)
6. Weight: Minimum consistent with other functions

7. Accuracy: ±5% (over range of 100-600 ml micturition volumes)

8. Reliability: Highest possible for "man-rated" system. Minimum number of active components.

9. All systems must incorporate a by-pass position so that urine can be passed directly to the urine bellows for "fail-safe" operation.

10. Human factors considerations:

    - The operation should be simple so as to require minimal crew manipulation.
    - Operating time should be minimum.
    - Ability for crewman operation with a gloved hand and without visual assistance is required.

11. Use qualified existing components where possible. For example, the sample bag and urine receiver would be GFE.

12. Whenever possible, use the same materials as in the present UTS. When required to use other materials, they should be chosen consistent with Report 6792, dated 1/29/64, "Physical Properties of Non-Metallic Materials for Manned Space Vehicles", McDonnell Aircraft Corp. for NASA, MSC.

13. Materials must be compatible with:

    a) 100% O_2 atmosphere

    b) 10^{-6} Torr

    c) 0°F to 200°F

    d) 14 day exposure to raw urine

14. System operation at 5.0 psia, 100% O_2

15. No outside source of power

16. A "fail-safe" philosophy was to pervade all design decisions, so that in the event of failure, the system could be by-passed, and the probability of solids or liquids escaping into the cabin would be minimized.

3.1.2 Approaches to Component and System Design

Physical Form Considerations for Tracer Chemical

An evaluation of the relative advantages and disadvantages of the physical form in which the tracer substance could be stored and metered led to the selection of the liquid form as most suitable. The main parameters used for this decision included:

1. Stability in storage
2. Ease of metering
3. Accuracy of metering
4. Ease and speed of introduction and uniform solution into urine
5. Storage volume limitations
6. Mechanical design considerations

A discussion of the merits of each form, which led to the selection of liquid as the most desirable form of tracer, is presented below.

A. Gas

It was readily apparent that the tracer in gaseous form would be unsuitable when evaluated by the criteria listed above, and this approach was discarded immediately.

B. Solid

A solid tracer, particularly in pill or pellet shape, offers certain advantages.

1. Preweighed pellets could provide high system accuracy.

2. A suitable solid could be very stable in storage until use.

The disadvantages in the use of a solid form are:

1. Relatively slow disintegration, solution and uniform dispersion.

2. The severe mechanical problems in storing and dispensing pellets into the urine under zero g conditions.

3. The probable necessity for the use of a soluble, chemically inert binder for the tracer material to get it into a desired pellet form, and the possible problems of insuring a uniform and known weight of tracer in each pellet.

A study was made of various concepts for the possible use of tracer in solid form. Design schematics are included in Appendix A. A comparison of the relative merits of this approach with the use of tracer in liquid form (see Item C, next page), led to the final decision to use a liquid tracer, as discussed below.

C. Liquid

The advantages of a liquid tracer material are:

1. High solubility and rapid, uniform dispersion in urine (for an appropriate liquid).

2. If the actual tracer material is a solid, it can be dissolved in an inert liquid. The resulting solution would be of uniform concentration, and if necessary, calibration of a stock tracer solution can be made at any time.

3. Mechanical metering systems for liquids are capable of straightforward design and good reproducibility.

4. Suitable liquids will have sufficient stability in storage and use in the spacecraft environment.

Disadvantages of liquids:

1. Possibility of leakage through seals.

2. Possibility of differential evaporation with resulting change of tracer concentration (for a tracer dissolved in a liquid carrier).

Since the storage and dispensing of a liquid tracer will be accomplished at relatively low pressures, reliable

sealing of the liquid is readily accomplished. Evaporation of the tracer solvent is overcome by storage in a low permeability container, and by using a low vapor pressure liquid. The overall utility of this form led to its selection for use in the volume measuring system. Appendix A includes concept studies performed to select a suitable liquid tracer dispensing and metering system.

D. Gel

The use of a gel form of tracer offers only the possibility of reduced seal pressure during storage, but the added difficulties of preparation of uniform concentration tracers, slower solution and mixing, and difficulty of accurate metering ruled out this form.

3.1.3 Preliminary Design of Urine Volume Measurement Systems

A large number of different system design concepts were evolved and screened with respect to the previously established criteria. For example, a detailed study of various tracer chemical injection techniques is summarized in Appendix A.

Most of the system design concepts which evolved were rejected on grounds of poor reliability, serious fabrication problems, apparent low system accuracy, etc. Six of the system concepts could not, however, be rejected on these grounds, and were carried through the design layout stage. Although some of the systems were better than others with respect to weight, volume, accuracy, operation, convenience, reliability, etc., it was not possible to select one system as the best without knowing the relative importance attached by the user to various system characteristics. A fairly detailed presentation of each of these six designs is, therefore, given in this section.

The last part of this section presents a summary of the rational evaluation process used for selection of the system for detail design and fabrication.

3.1.3.1 Type I - Single Removable Mixing/Sample Bag with Tracer Chemical Stored in Bag

Layout Drawing: SKD 1771

Operational Block Diagram: Figure 3

The unique feature of the Type I system is the incorporation of a dual purpose mixing and sample bag with the bag containing a premeasured amount of tracer chemical.

Description of Components

Mixing/Sample Bag

One mixing/sample bag is required for each urination and a given amount of tracer material is prepackaged within each bag. The bag is "hour-glass" shaped with a 700 ml portion and a 100 ml portion. The bag could be made of .00575" thick Milprint composite plastic, RD-7531, and consists of a four layer laminate, as follows:

1 mil polyethylene
2 mils aclar
0.75 mils M-27 mylar
2 mils polyethylene

This material was being used for the Gemini Food Container Program.

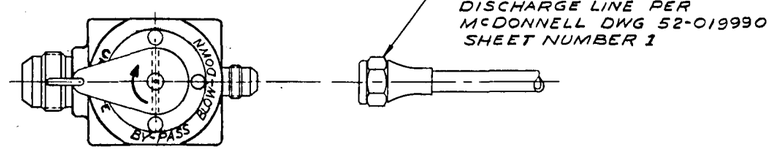

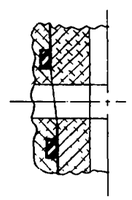

DETAIL C
SCALE 2/1

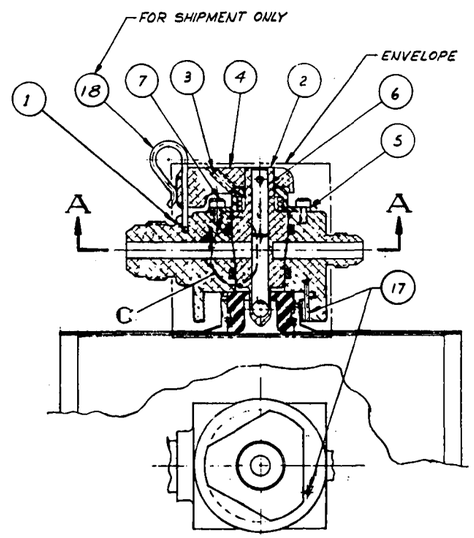

BOTTOM VIEW
(WITH BAG REMOVED)

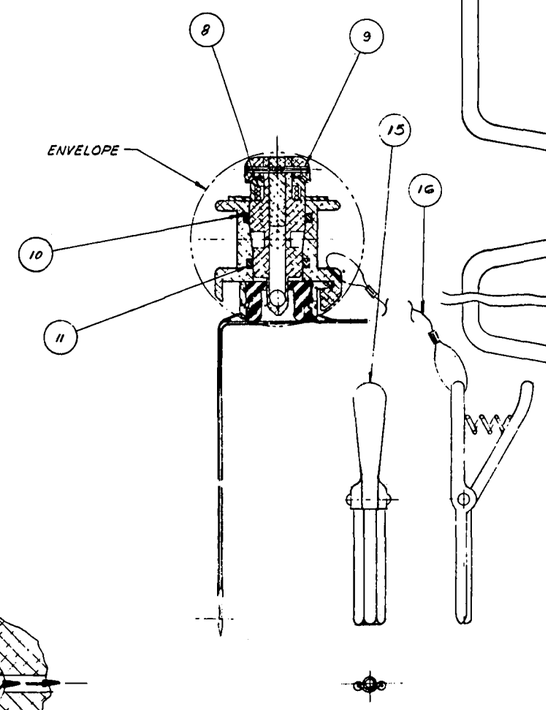

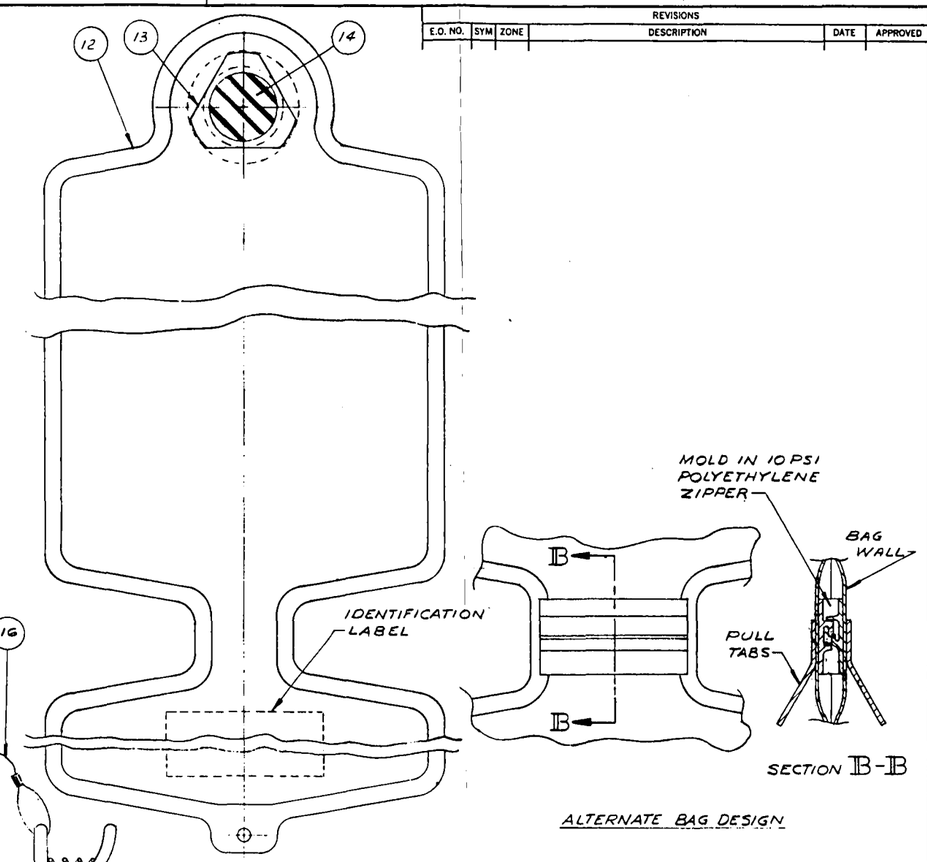

SECTION B-B

ALTERNATE BAG DESIGN

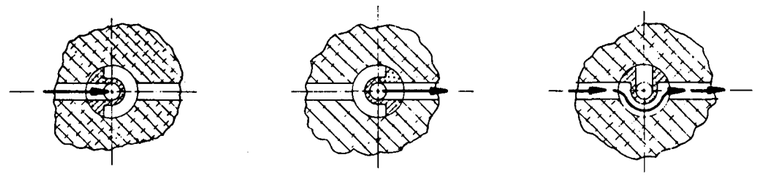

URINATE BLOWDOWN BY-PASS

SECTIONS A A

NOTE:
1 70 TO 80 SHORE "A" DUROMETER

REVISIONS

E.O. NO.	SYM	ZONE	DESCRIPTION	DATE	APPROVED

LIST OF MATERIAL OR PARTS LIST

QTY REQD PER DASH NO.				ITEM NO.	CODE IDENT	PART OR IDENTIFYING NO.	NOMENCLATURE OR DESCRIPTION	MATERIAL	SPECIFICATION
			1	18		AN415-1	PIN-LOCK	CRES	
			1	17		MS171437	PIN-SPRING	CRES	
			1	16			LANYARD-CLAMP	CRES	PLASTIC COATED CABLE
			1	15			CLAMP-BAG	AL6061-T6	
			1	*14			SEAL-BAG	SILICONE RUBBER HARD	DOW-CORNING 9711, 30 ± 5 DUR
			1	13			FITTING-BAG	PLASTIC	
			1	12			BAG-COMB., MIXING-SAMP	MILFRIGHT LAMINANT	RD 7351
			1	11		MS28775-116	SEAL, O-RING	VITON	1
			1	10		MS28775-118	SEAL, O-RING	VITON	1
			1	9		MS171500	PIN, SPRING	CRES	
			1	8		MS24585-437	SPRING	CRES	
			4	7		MS16995-2	SCREW, CAP, SOC. HD.		*6-32UNC-3A × 1/4 LG.
			1	6			PLUG -	AL6061-T6	TEFLON COATED
			1	5			CAP	CRES	
			1	4			KNOB - SELECTOR	AL6061-T6	
			1	3			DETENT-ASSY	CRES	VLIER # S-48A
			1	2			SYRINGE VALVE	AL6061-T6	TEFLON COATED
			1	1			HOUSING	AL6061-T6	

SKD-1771

UNLESS OTHERWISE SPECIFIED
DIMENSIONS ARE IN INCHES
TOLERANCES
.X = ±.030, .XX = ±.010, .XXX = ±.005
ANGULAR ±30'
BREAK SHARP EDGES .005-.015
ALL SMALL FILLETS .020-.040R
THREADS PER FED. HNDBK H-28 AND SUPPLEMENTS.
DIMENSIONING PER MIL-STD-8
WELD SYMBOLS PER JAN-STD-19
SURFACE ROUGHNESS SYMBOLS PER MIL-STD-10
ALL FINISHED SURFACES 125√

NEXT ASSEMBLY

DRAWN BY	T.P. Young	2-1-65
CHECKER		
STRESS ENG'R		
AERO THERMO		
DES. ENG'R	J. Lobyns	2-1-65
PROJ. ENG'R	" "	" "
MATERIALS		

CHEMICAL URINE VOLUME
MEASURING SYSTEM-TYPE I
SINGLE REMOVABLE MIXING/SAMPLE BAG
WITH TRACER CHEMICAL STORED IN BAG

D SKD-1771

1/1

OPERATIONAL BLOCK DIAGRAM

CHEMICAL URINE VOLUME MEASURING SYSTEM

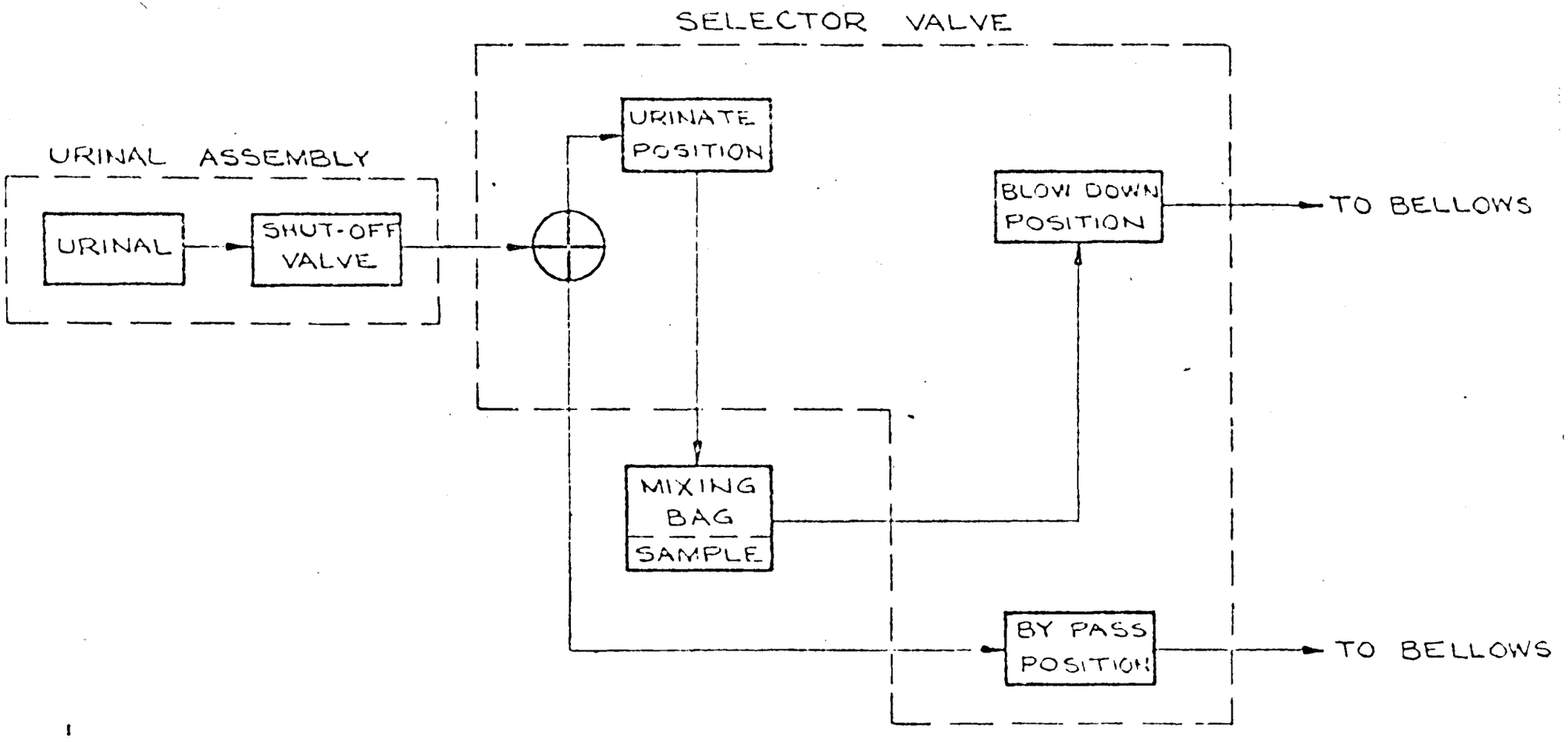

TYPE I - SINGLE BAG SYSTEM - TRACER IN MIXING BAG

FIGURE 3.

The neck of the bag has a silicone rubber stopper preslit to accept the end of a syringe probe in the same manner as the GFE sample bag. This stopper closes upon the extraction of the syringe needle and provides a seal for the combination mixing/sample bag. The stopper fits into a polyethylene plastic neck and faces against the male fitting for the 1/6 turn breach block connector used to attach the bag to the function selector valve.

An external CRES hose clamp is provided to create a temporary seal at the narrow neck of the bag between the 700 ml and 100 ml portions of the bag. This temporary seal will prevent the loss of the 100 ml sample during the dumping of the excess urine from the larger portion of the bag. An alternate bag design includes a built-in plastic zipper to provide the temporary seal between the two sections of the bag.

Function Selector Valve

The function selector valve for this configuration is the simplest of the six proposed designs. The valve consists of an 6061-T6 aluminum body with Viton "O" rings to seal

a 6061-T4 Teflon coated tapered plug. The tapered plug is lapped to fit the valve body and is loaded by a CRES spring to give a 100 psi face pressure to insure a very high order of sealing between the individual flow passages. During operation of the valve, the differential pressure across the plug seals will be very low, normally less than 1 psi with less than 6 psi maximum possible.

The valve has three detented positions - urinate, dump, and bypass. The bypass position is provided so that the urine receiver can be used without a mixing/sample bag. In this position, the urine will go directly to the bellows reservoir. This bypass will add greatly to the overall system reliability by providing a direct unobstructed path during micturition. The valve also incorporates a fixed flow probe, similar to the design of the existing sample bag probe, but larger in diameter, which provides the passage for the urine into the mixing/sample bag.

Method of Operation

The bag is attached to the function selector valve, and with the valve in the urinate position, the

crewman urinates. The bag is then manipulated to mix the urine with the tracer chemical and the 100 ml sample portion of the bag is sealed off. The valve is then turned to the blowdown position to discharge the excess fluid. The bag is then removed from the valve and stored.

System Evaluation

A number of important characteristics of the system have been determined. Accuracy and reliability are discussed in subsequent sections of this report. Detailed information concerning numbers of parts, operating steps, weight, and volume is given in Appendix C, pages C-2 thru C-5. and is summarized in Table 12 of this section.

From Table 12, System Evaluation Summary, it can be noted that the Type I system has the highest reliability, .99968; the lowest number of parts, 24; the fewest operations, 27; the lowest per cent error, ± 1.79%; but the highest weight (11.76 lbs.), and the highest external storage volume (457 cubic inches).

The existing urine volume measuring system requires 133 cubic inches of external storage volume (for the 202 sample bags) (See Table 12), and weighs 3.83 lbs. (3.58 lbs. for bags plus .25 lb. for injector, fittings and hose). Therefore,

the additional weight is 7.93 lbs. and the additional external storage volume is 324 cubic inches.

3.1.3.2 Type II - Two Bag System - Fixed Mixing Bag with Tracer Chemical Injection and Storage

Layout Drawing: SKD 1772

Operational Block Diagram: Figure 4

The unique feature of this system is the storage of the tracer material in a cylindrical container extending into the coiled urine exhaust line. It also provides a metering system to inject a given amount of tracer chemical into the urine.

Description of Components

Mixing and Sample Bags

The mixing bag has an 800 ml capacity and is made of neoprene-impregnated nylon. It is permanently attached to the main body of the function selector valve and folded around the valve assembly when not in use.

The sample bag used will be the one presently in use and would be attached to the valve by a sixth turn bayonet connector as presently used.

REVISIONS					
E.O. NO.	SYM	ZONE	DESCRIPTION	DATE	APPROVED

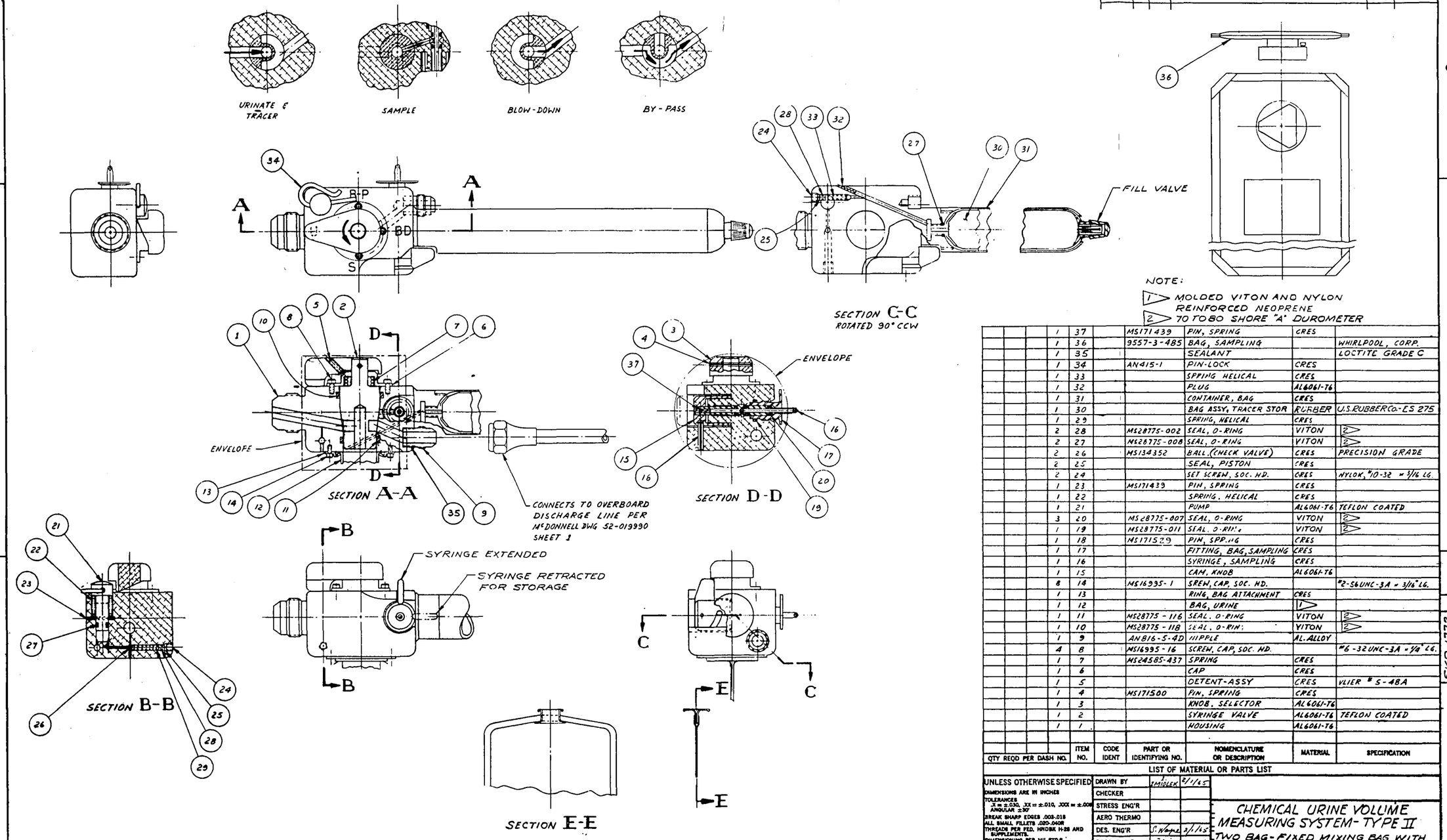

NOTE:

1. MOLDED VITON AND NYLON REINFORCED NEOPRENE
2. 70 TO 80 SHORE "A" DUROMETER

QTY REQD PER DASH NO.					ITEM NO.	CODE IDENT	PART OR IDENTIFYING NO.	NOMENCLATURE OR DESCRIPTION	MATERIAL	SPECIFICATION
			1	37			MS171439	PIN, SPRING	CRES	
			1	36			9557-3-485	BAG, SAMPLING		WHIRLPOOL, CORP.
			1	35				SEALANT		LOCTITE GRADE C
			1	34			AN415-1	PIN-LOCK	CRES	
			1	33				SPRING HELICAL	CRES	
			1	32				PLUG	AL6061-T6	
			1	31				CONTAINER, BAG	CRES	
			1	30				BAG ASSY, TRACER STOR	RUBBER	U.S.RUBBER Co.-ES 275
			1	29				SPRING, HELICAL	CRES	
			2	28			MS28775-002	SEAL, O-RING	VITON	2
			2	27			MS28775-008	SEAL, O-RING	VITON	2
			2	26			MS134352	BALL (CHECK VALVE)	CRES	PRECISION GRADE
			2	25				SEAL, PISTON	CRES	
			2	24				SET SCREW, SOC. HD.	CRES	NYLOK, #10-32 × 3/16 LG.
			1	23			MS171439	PIN, SPRING	CRES	
			1	22				SPRING, HELICAL	CRES	
			1	21				PUMP	AL6061-T6	TEFLON COATED
			3	20			MS28775-007	SEAL, O-RING	VITON	2
			1	19			MS28775-011	SEAL, O-RING	VITON	2
			1	18			MS171529	PIN, SPRING	CRES	
			1	17				FITTING, BAG, SAMPLING	CRES	
			1	16				SYRINGE, SAMPLING	CRES	
			1	15				CAM, KNOB	AL6061-T6	
			8	14			MS16995-1	SREW, CAP, SOC. HD.		#2-56UNC-3A × 3/16" LG.
			1	13				RING, BAG ATTACHMENT	CRES	
			1	12				BAG, URINE	1	
			1	11			MS28775-116	SEAL, O-RING	VITON	2
			1	10			MS28775-118	SEAL, O-RING	VITON	2
			1	9			AN816-5-4D	NIPPLE	AL. ALLOY	
			4	8			MS16995-16	SCREW, CAP, SOC. HD.		#6-32UNC-3A × 1/4" LG.
			1	7			MS24585-437	SPRING	CRES	
			1	6				CAP	CRES	
			1	5				DETENT-ASSY	CRES	VLIER # S-48A
			1	4			MS171500	PIN, SPRING	CRES	
			1	3				KNOB, SELECTOR	AL6061-T6	
			1	2				SYRINGE VALVE	AL6061-T6	TEFLON COATED
			1	1				HOUSING	AL6061-T6	

LIST OF MATERIAL OR PARTS LIST

SKD-1772

UNLESS OTHERWISE SPECIFIED
DIMENSIONS ARE IN INCHES
TOLERANCES
.X = ±.030, .XX = ±.010, .XXX = ±.005
ANGULAR ±30'
BREAK SHARP EDGES .003-.015
ALL SMALL FILLETS .020-.040R
THREADS PER FED. HNDBK H-28 AND SUPPLEMENTS.
DIMENSIONING PER MIL-STD-8
WELD SYMBOLS PER JAN-STD-19
SURFACE ROUGHNESS SYMBOLS PER MIL-STD-10
ALL FINISHED SURFACES 125/√

NEXT ASSEMBLY

DRAWN BY	J. MIGLER	2/1/65
CHECKER		
STRESS ENG'R		
AERO THERMO		
DES. ENG'R	S. Wagner	2/1/65
PROJ. ENG'R		
MATERIALS		

CHEMICAL URINE VOLUME MEASURING SYSTEM- TYPE II
TWO BAG-FIXED MIXING BAG WITH TRACER CHEM INJECTOR AND STORAGE

D SKD-1772

1/1

OPERATIONAL BLOCK DIAGRAM

CHEMICAL URINE VOLUME MEASURING SYSTEM

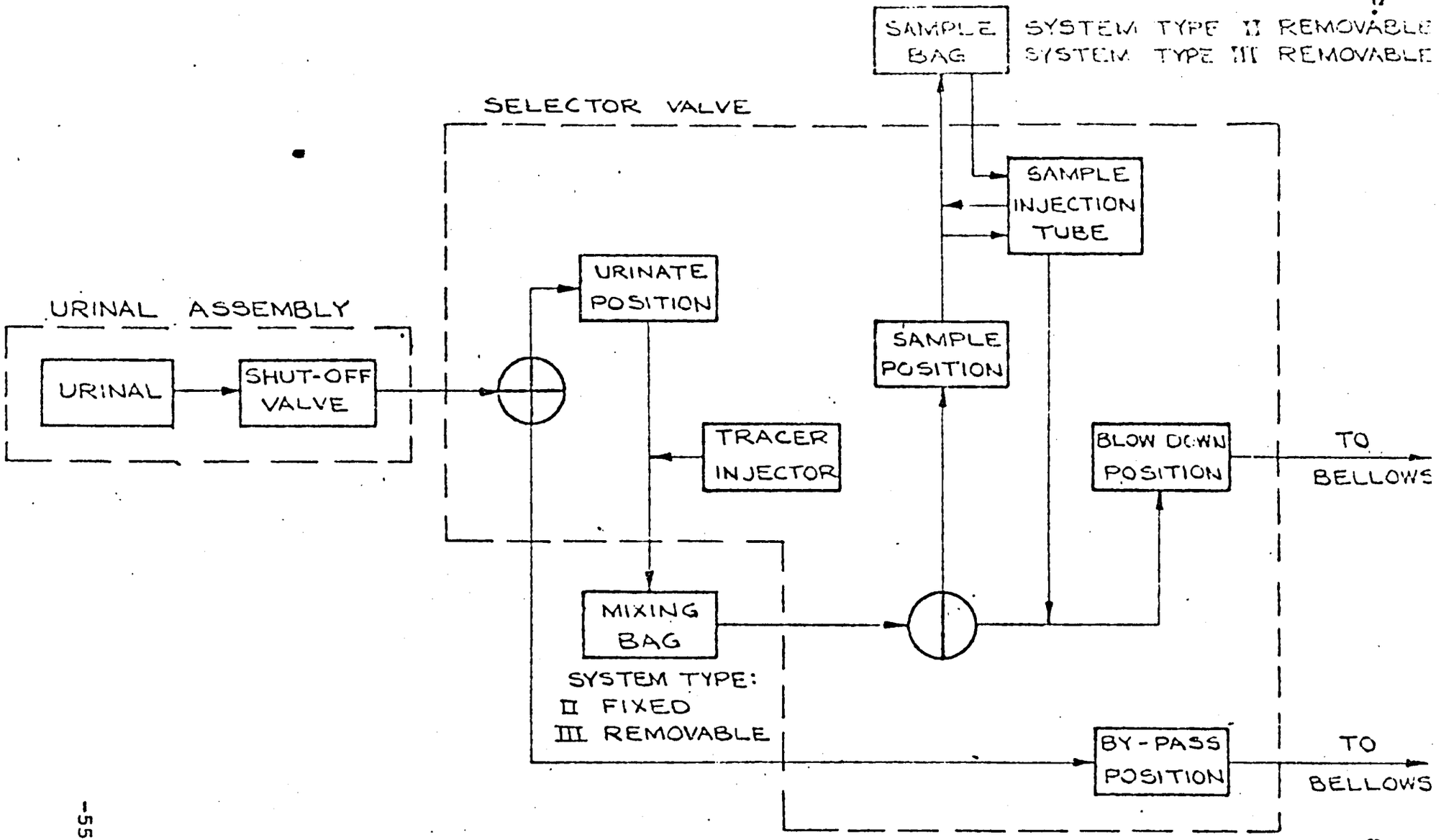

TYPE II AND III - TWO BAG, TRACER INJECTOR SYSTEMS

FIGURE 4.

Function Selector Valve

The function selector valve has four positions: blowdown, sample, urinate, and bypass. Detents are provided to aid in proper location of these positions. The detent arrangement also prevents the valve from being rotated in the opposite direction. The sealing of the valve is accomplished by a Teflon coated tapered plug which has additional "O" ring seals, top and bottom, to insure zero leakage from the selector valve.

A cam actuated sample flow probe is provided to complete the flow passage through the valve to the sample bag from the collection/mixing bag.

A tracer chemical metering pump, built into the main body of the valve, is actuated by the movement of the valve selector knob. This delivers a fixed volume of tracer chemical to the urine inlet passage just before the start of urination.

Rotation of the valve selector knob from the bypass position to the urinate position will cause the knob cam surface to make contact with the tracer chemical metering pump piston. The cam surface will force the piston down

to expel the tracer chemical past the outlet check valve and into the urine inlet line. The stroke of the metering pump is controlled by a cross pin which limits the travel of the piston in both directions, and therefore, fixes the volume of tracer.

When the valve handle cam has completely passed the pump piston, a built-in spring will raise the piston drawing a fresh charge of tracer chemical into the metering cavity through the tracer storage container check valve. The driving force for the movement of the tracer chemical from its reservoir, through the check valve and into the metering cavity, is obtained by a combination of the 5 psi cabin pressure and the 5 to 10 psi tracer chemical storage bladder pressure.

A bypass position is provided on the valve assembly to permit the use of the present Urine Transport System (UTS), without interference by the urine volume measuring system. This feature is included in all designs for crewman safety and mission reliability.

Tracer Chemical Storage and Metering

The tracer chemical is stored in a long cylindrical rubber balloon enclosed in an

aluminum protective housing and extending from the main body of the selector valve into the center of the coiled urine exhaust line.

The balloon storage system is used to provide relatively uniform tracer feed pressure for more reliable operation of the two check valves of the tracer chemical pumping and metering system. A description of the balloon type tracer storage component is presented in the section describing the particular system selected for full development and fabrication.

Method of Operation

The Chemical Urine Volume Measuring System, Type II, is stored with the selector valve in the blowdown position. After the crewman has attached the urine receiver to his penis, the selector valve is rotated counterclockwise 180° past the bypass position to the urinate position. The selector knob now points directly at the crewman.

The flow of urine from the crewman will wash the tracer chemical from the urine inlet line, where it was injected by the metering pump, into the mixing bag. The tracer

chemical and the urine are thoroughly mixed by manipulation of the mixing bag.

The sample bag is attached to the sample bag fitting on the main body of the valve and the sampling probe cam knob rotated 90°. This action causes the syringe needle to move out of its housing and to pierce the silicone rubber seal on the sample bag. This action also uncovers an additional port in the syringe to complete a passage from the selector valve plug to the sample bag.

When the selector valve is rotated 90°, it will line up the collection/mixing bag passage in the selector valve plug and the sample probe line. The crewman now squeezes the mixing bag and transfers 100 ml of the urine tracer chemical mixture to the sample bag.

Rotating the sample syringe knob back 90°, the sample probe is withdrawn from the sample bag and the inlet passage at the base of the syringe is closed. The sample bag seal automatically closes and seals at the same time.

The selector valve plug is turned to the

blowdown position (90° turn) where the excess urine is blown overboard, using the existing UTS bellows and valving system.

The fixed mixing bag is folded axially in half and then wrapped around the valve assembly, and the whole system stored in the 2.6" I.D. storage tube.

System Evaluation

Accuracy, reliability, numbers of parts and operations, weight, and volume data for this system are given in Appendix C, pg.C-2 thru C-5 and is summarized in Table 12 of this section.

This system weighs only slightly more (.843 lbs.) than the existing system and has the same external storage volume (202 sample bags) as the present system.

3.1.3.3 Type III - Two Bag System - Removable Bag with Tracer Chemical Injection and Storage

Layout Drawing: SKD 1773

Operational Block Diagram: Figure 4

The Type III system is basically the same as the Type II system, except that the 800 ml mixing bag has been made removable. This has been done

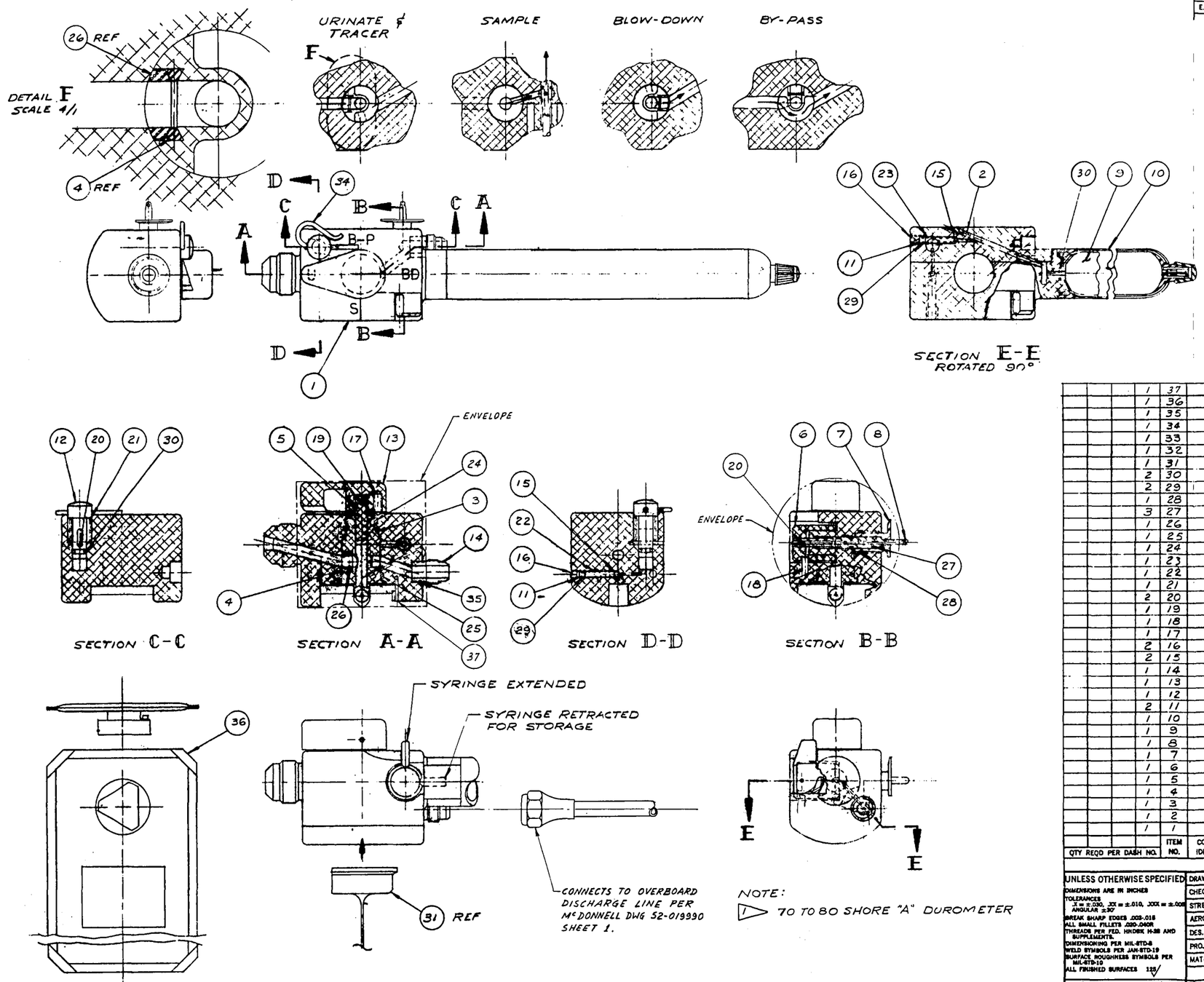

REVISIONS

E.O. NO.	SYM	ZONE	DESCRIPTION	DATE	APPROVED

QTY REQD PER DASH NO.				ITEM NO.	CODE IDENT	PART OR IDENTIFYING NO.	NOMENCLATURE OR DESCRIPTION	MATERIAL	SPECIFICATION
			1	37		MS171436	PIN, SPRING	CRES	
			1	36		9557-3-485	BAG, SAMPLING		WHIRLPOOL CORP.
			1	35			SEALANT		LOCTITE-GRADE C
			1	34		AN415-1	PIN, LOCK	CRES	
			1	33			SEAL-BAG	SILICONE RUBBER	DOW-CORNING-9711, 90±5 DURO
			1	32			FITTING, BAG	HARD PLASTIC	
			1	31			BAG, URINE	NYLON REIN: NEOPRENE	
			2	30		MS28775-008	SEAL, O-RING	VITON	7
			2	29		MS28775-002	SEAL, O-RING	VITON	7
			1	28		MS28775-011	SEAL, O-RING	VITON	7
			3	27		MS28775-007	SEAL, O-RING	VITON	7
			1	26		MS28775-010	SEAL, O-RING	VITON	7
			1	25		MS28775-118	SEAL, O-RING	VITON	7
			1	24		MS28775-116	SEAL, O-RING	VITON	7
			1	23			SPRING, HELICAL	CRES	
			1	22			SPRING, HELICAL	CRES	
			1	21			SPRING, HELICAL	CRES	
			2	20		MS171499	PIN, SPRING	CRES	
			1	19		MS171500	PIN, SPRING	CRES	
			1	18		MS171527	PIN, SPRING	CRES	
			1	17			DENTENT ASSY	CRES	VLIER # S-48A
			2	16			SET SCREW, SOCKET HD	CRES	NYLOK, 10-32 x 3/16
			2	15		MS134352	BALL, (CHECK VALVE)	CRES	PRECISION GRADE
			1	14		AN816-54D	NIPPLE	AL. ALLOY	
			1	13			KNOB, SELECTOR	ALGOG1-T6	
			1	12			PUMP	ALGOG1-T6	TEFLON COATED
			2	11			SEAL, PISTON	CRES	
			1	10			CONTAINER, BAG	CRES	
			1	9			BAG ASSY, TRACER STOR	F	U.S.RUBBER Co. ES275
			1	8			SYRINGE, SAMPLING	CRES	
			1	7			FITTING, BAG SAMP	CRES	
			1	6			CAM, KNOB	ALGOG1-T6	
			1	5			PLUG	ALGOG1-T6	TEFLON COATED
			1	4			SEAL, SYRINGE VALVE	TEFLON	
			1	3			SYRINGE VALVE	ALGOG1-T6	TEFLON COATED
			1	2			PLUG	ALGOG1-T6	
			1	1			HOUSING	ALGOG1-T6	

LIST OF MATERIAL OR PARTS LIST

UNLESS OTHERWISE SPECIFIED
DIMENSIONS ARE IN INCHES
TOLERANCES
X = ±.030, XX = ±.010, XXX = ±.005
ANGULAR ±30'
BREAK SHARP EDGES .005-.018
ALL SMALL FILLETS .020-.040R
THREADS PER FED. HNDBK H-28 AND SUPPLEMENTS.
DIMENSIONING PER MIL-STD-8
WELD SYMBOLS PER JAN-STD-19
SURFACE ROUGHNESS SYMBOLS PER MIL-STD-10
ALL FINISHED SURFACES 125√

NEXT ASSEMBLY

DRAWN BY	J.R. Young	2-1-65
CHECKER		
STRESS ENG'R		
AERO THERMO		
DES. ENG'R	J. Hayes	2-1-65
PROJ. ENG'R		
MATERIALS		

CHEMICAL URINE VOLUME MEASURING SYSTEM-TYPE III
TWO BAG - REMOVABLE BAG WITH TRACER CHEMICAL INJECTOR AND STORAGE

D SKD-1773

1/1

SKD-1773

to reduce the difficulty of storing the valve assembly in the 2.6" I.D. tube. It also improves the over-all reliability of the system because a spare mixing bag will be carried to replace the original mixing bag in case of damage.

The added reliability of this system comes at the expense of a slight loss in accuracy, and an increase in the number of operations, weight and external storage volume (see Appendix C, pages C-2 thru C-5 and Table 12 in this section).

3.1.3.4 Type IV - Two Bag System - Fixed Mixing Bag with Tracer Chemical Stored in Sample Bag

Layout Drawing: SKD 1774

Operational Block Diagram: Figure 5

This system provides for storage of the tracer chemical in the sample bag. For thorough mixing of the tracer chemical with the total quantity of urine, it is required to transfer the fluid back and forth between the mixing and sample bags.

Description of Components

Mixing and Sample Bags

The mixing bag is permanently attached

REVISIONS					
E.O. NO.	SYM	ZONE	DESCRIPTION	DATE	APPROVED

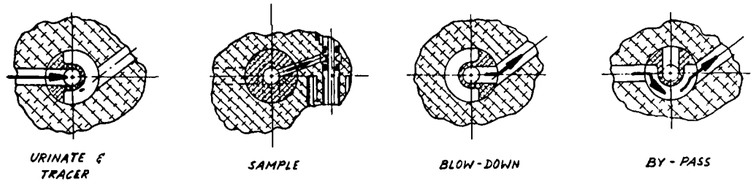

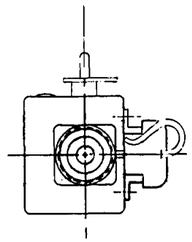

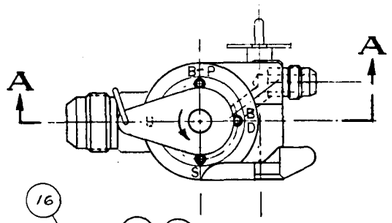

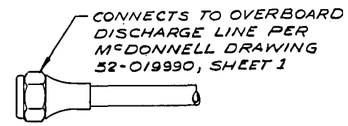

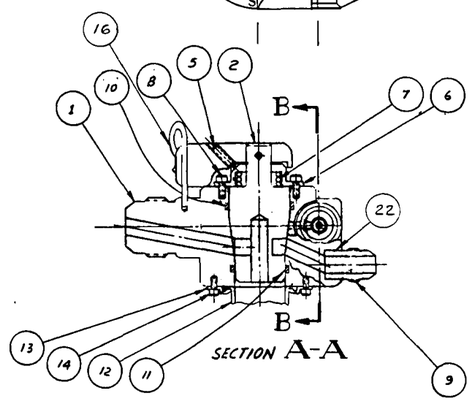

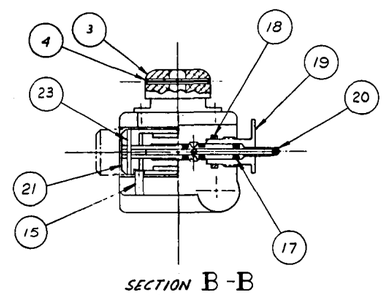

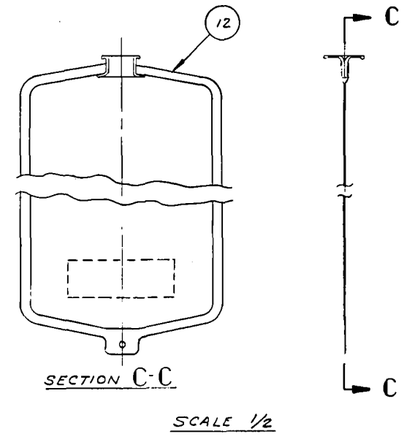

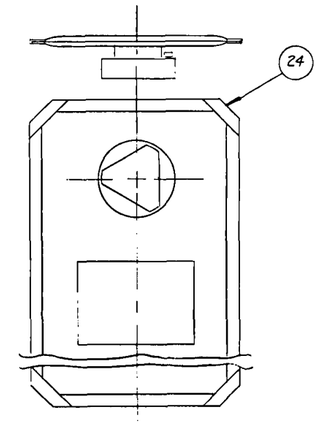

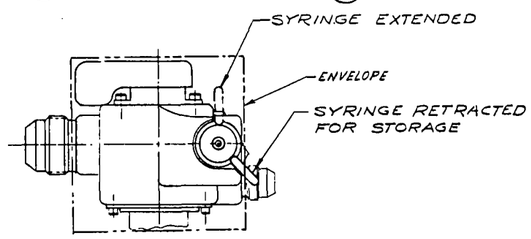

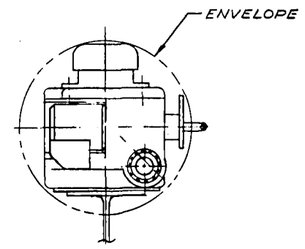

NOTE:

1. MOLDED VITON AND NYLON REINFORCED NEOPRENE.
2. 70 TO 80 SHORE "A" DUROMETER

QTY REQD PER DASH NO.				ITEM NO.	CODE IDENT	PART OR IDENTIFYING NO.	NOMENCLATURE OR DESCRIPTION	MATERIAL	SPECIFICATION
			1	24		9557-3-485	BAG, SAMPLING		WHIRLPOOL CORP.
			1	23		MS171439	PIN, SPRING	CRES	
			1	22			SEALANT		LOCTITE, GRADE C
			1	21			CAM, KNOB	AL6061-T6	
			1	20			SYRINGE, SAMPLING	CRES	
			1	19			FITTING, BAG SAMP	AL6061-T6	
			1	18		MS28775-011	SEAL, "O" RING	VITON	2
			3	17		MS28775-007	SEAL, "O" RING	VITON	2
			1	16		AN415-1	PIN, LOCK	CRES	
			1	15		MS171524	PIN, SPRING	CRES	
			8	14		MS16995-1	SCREW, CAP, SOC. HD.		#2-56UNC-3A x 3/16" LG.
			1	13			RING, BAG ATTACHMENT	CRES	
			1	12			BAG, URINE	1	
			1	11		MS28775-116	SEAL, O-RING	VITON	2
			1	10		MS28775-118	SEAL, O-RING	VITON	2
			1	9		AN816-5-4D	NIPPLE	AL.ALLOY	
			4	8		MS16995-16	SCREW, CAP, SOC. HD.		#6-32UNC-3A x 1/4" LG.
			1	7		MS24585-437	SPRING	CRES	
			1	6			CAP	CRES	
			1	5			DETENT ASSY	CRES	VLIER # S-48A
			1	4		MS171500	PIN, SPRING	CRES	
			1	3			KNOB SELECTOR	AL6061-T6	
			1	2			SYRINGE VALVE	AL6061-T6	TEFLON COATED
			1	1			HOUSING	AL6061-T6	

LIST OF MATERIAL OR PARTS LIST

UNLESS OTHERWISE SPECIFIED
DIMENSIONS ARE IN INCHES
TOLERANCES
X = ±.030, .XX = ±.010, .XXX = ±.005
ANGULAR ±30'
BREAK SHARP EDGES .003-.015
ALL SMALL FILLETS .020-.040R
THREADS PER FED. HANDBK H-28 AND SUPPLEMENTS.
DIMENSIONING PER MIL-STD-8
WELD SYMBOLS PER JAN-STD-19
SURFACE ROUGHNESS SYMBOLS PER MIL-STD-10
ALL FINISHED SURFACES 125√

NEXT ASSEMBLY

DRAWN BY	J. SHIDLEY	2/1/65
CHECKER		
STRESS ENG'R		
AERO THERMO		
DES. ENG'R	J. Vaupa	2/1/65
PROJ. ENG'R		
MATERIALS		

TITLE CHEMICAL URINE VOLUME MEASURING SYSTEM-TYPE IV
TWO BAG-FIXED MIXING BAG WITH TRACER CHEM STORED IN SAMPLE BAG

D SKD-1774

1/1

63

OPERATIONAL BLOCK DIAGRAM

CHEMICAL URINE VOLUME MEASURING SYSTEM

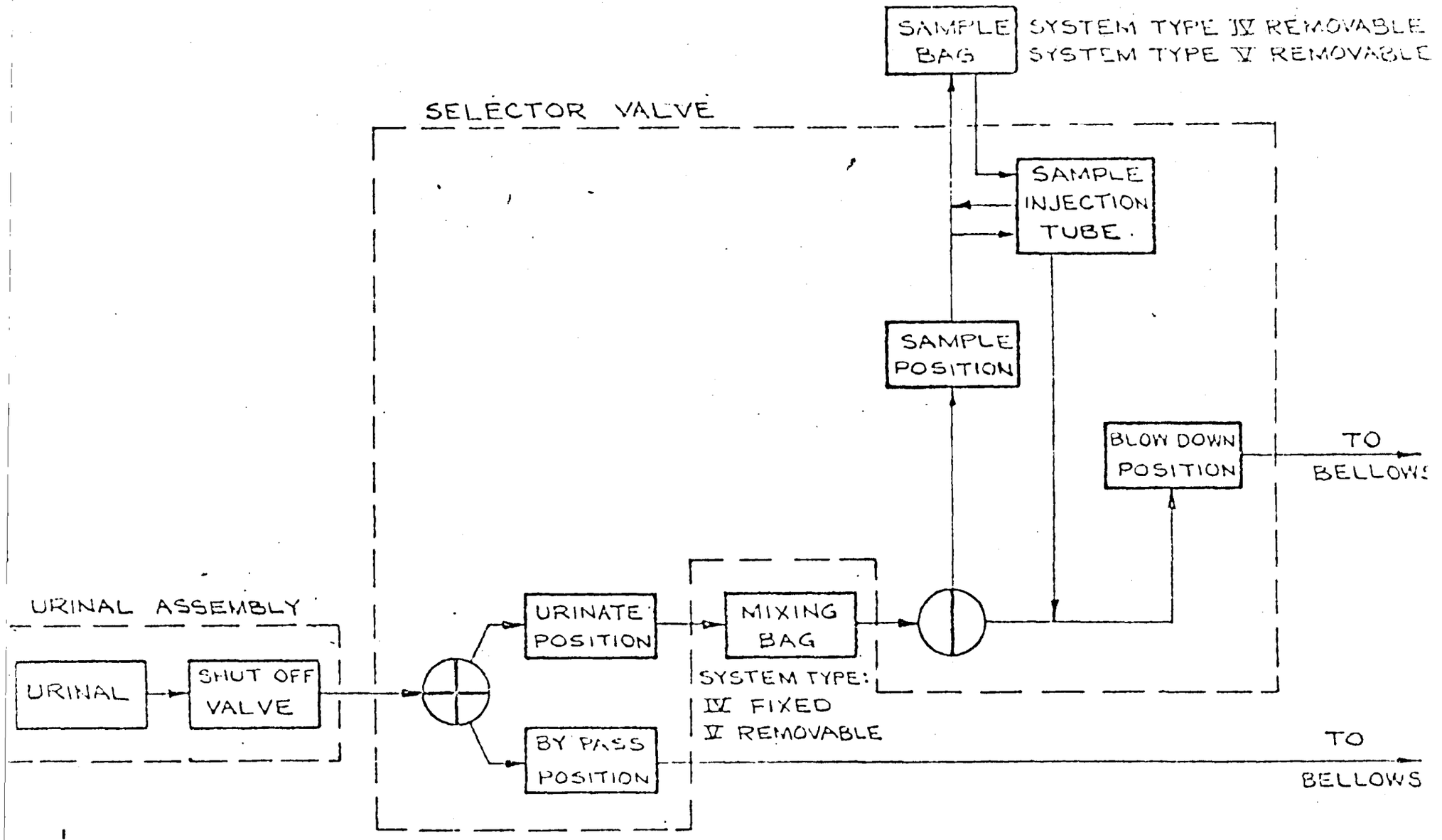

TYPES IV & V TWO BAG SYSTEMS - TRACER IN SAMPLE BAG

FIGURE 5

to the main valve body similar to the Type II system.

The sample bags used are of the same type previously described and are attached to the valve as for the Type II system. A fixed amount of tracer chemical will be stored in each bag on the ground prior to flight.

Function Selector Valve

The materials and technique of construction of the valve are identical to the Type II assembly. The main body of the valve is 6061-T6 aluminum. The taper plug is Teflon coated to provide low friction (thereby low operating torque) and good sealing for the urine passages. A corrosion resistant steel cap and spring keep the taper plug in contact with the close fitting bore in the main valve body. A cam operated sample bag syringe is provided as previously described.

The valve has four detented positions: blowdown, bypass, urinate, and sample.

The valve will be stored in the blow-down position with the fixed urine collection/mixing bag wrapped around it as in the Type II system.

Method of Operation

Operation of the system starts like the Type II; that is, the unit will be removed, the fixed mixing bag unwrapped, and the urine receiver attached to the penis of the crewman.

The selector valve will be turned to the urinate position, and when the crewman has completed voiding, the selector valve is turned to the sample position. The sample bag is attached to its fitting and the sample bag probe extended to pierce the bag seal.

A direct passage between the mixing bag and the sample bag now exists so that squeezing the mixing bag will cause some urine (about 100 ml) to flow into the sample bag and there it is mixed (by manipulating the sample bag) with the prestored tracer chemical.

When the 100 ml of urine is well mixed with

the tracer chemical, the sample bag is squeezed, forcing as much of the mixture as possible back into the mixing bag. Then the tracer-rich urine is mixed with the raw urine in the mixing bag and forms a tracer deficient mixture.

This mixing/transferring process is repeated a sufficient number of times to obtain satisfactory mixing of the tracer chemical with the total quantity of urine. The number of repeat cycles required is a function of: (1) degree of uniformity in concentration required; (2) the efficiency with which the urine can be transferred from the sample bag back into the mixing bag; and (3) the volume of urine and size of the sample bag. An analytical method for determining the required number of cycles is given in Appendix B. Analysis permitted an allowable trade-off to be made between accuracy and number of cycles for a 300 ml total quantity of urine and a 100 ml sample bag. For example, assuming that the sample bag can be emptied with a 90% efficiency, the urine must be transferred to the sample bag four times to obtain a uniformity in tracer chemical concentration within 0.1%.

After the mixing process is completed, and a sample obtained, the excess urine is dumped overboard using the existing UTS. The sample syringe is extracted, the filled sample bag is removed and stored, and the valve-mixing bag assembly returned to its storage tube.

System Evaluation

Detailed system characteristics are given in Appendix C, pages C-2 thru C-5.

The system evaluation summary (Table 12) shows that this system accuracy is high; weight is lowest of all systems and volume is near minimum. However, the number of operations is the highest and the total time for completing one cycle is the longest.

3.1.3.5 Type V - Two Bag System - Removable Mixing Bag with Tracer Chemical Stored in Sample Bag

Layout Drawing: SKD 1775

Operational Block Diagram: Figure 5

The Type V tracer chemical urine measuring system is identical to the Type IV except that the 800 ml mixing bag has been made removable.

REVISIONS					
E.O. NO.	SYM	ZONE	DESCRIPTION	DATE	APPROVED

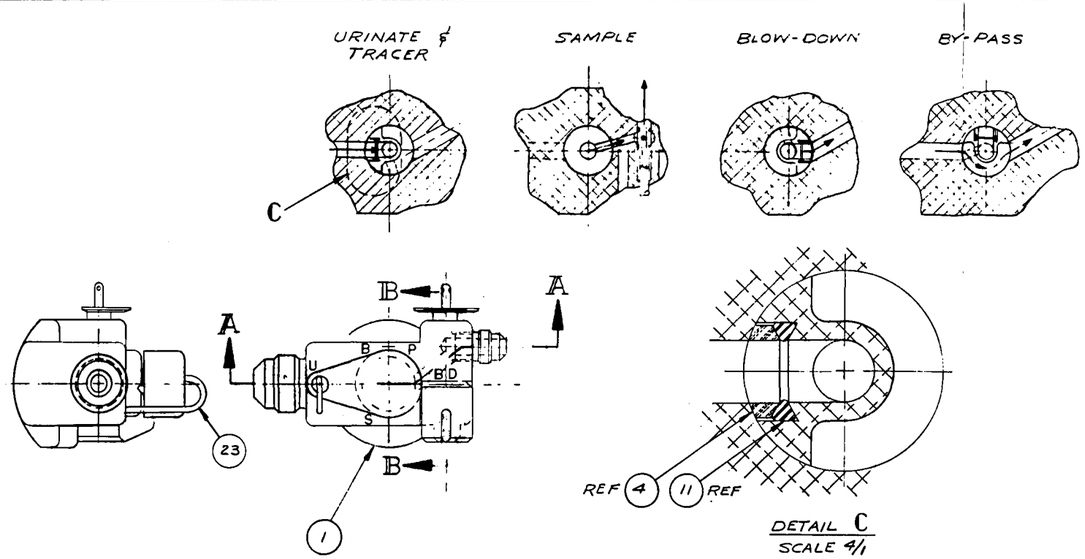

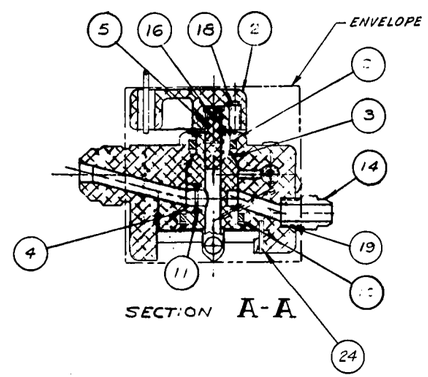

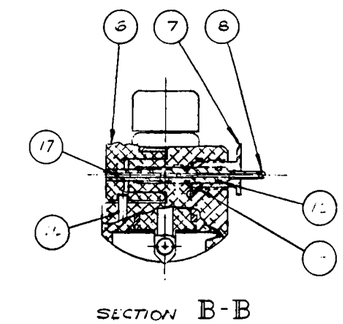

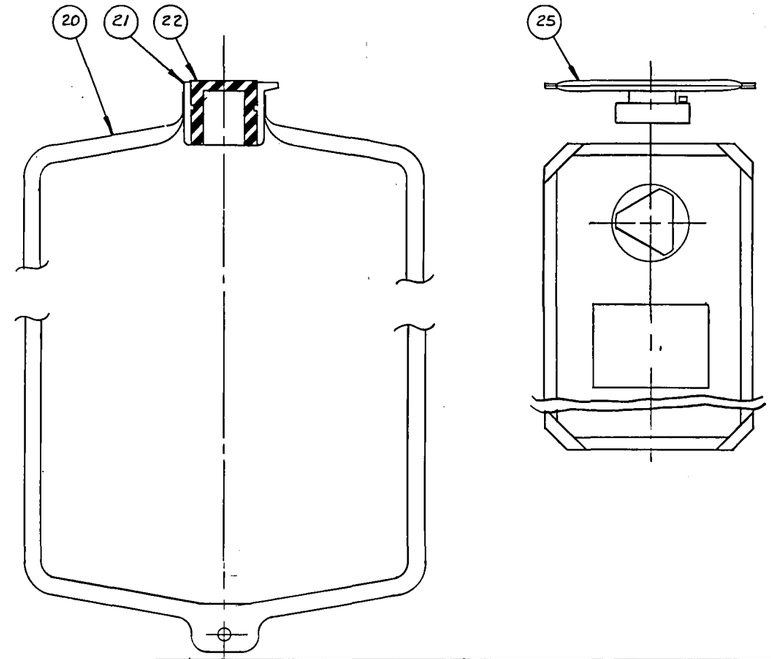

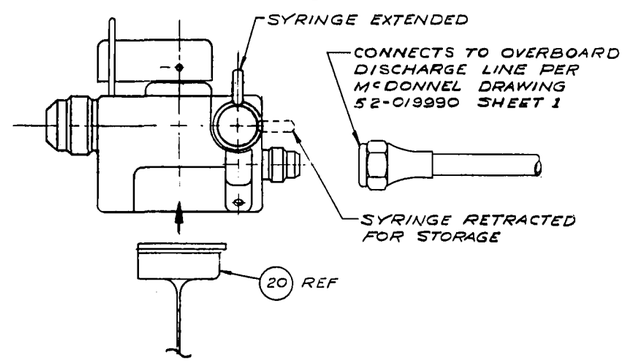

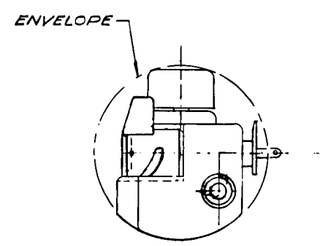

NOTE:
1 ▷ 70 TO 80 SHORE 'A' DUROMETER.

QTY REQD PER DASH NO.				ITEM NO.	CODE IDENT	PART OR IDENTIFYING NO.	NOMENCLATURE OR DESCRIPTION	MATERIAL	SPECIFICATION
			1	25		9557-3-485	BAG, SAMPLING		WHIRLPOOL CORP.
			1	24		MS171436	PIN, SPRING	CRES	
			1	23		AN415-2	PIN, LOCK	CRES	
			1	22			SEAL-BAG	SILICONE RUBBER	DOW-CORNING-9711, 30±5 DURO
			1	21			FITTING, URINE BAG	GLASS PLASTIC	
			1	20			BAG, URINE	NEOPRENE	
			1	19			SEALANT		LOCKTITE GRADE C
			1	18			DETENT, ASSY	CRES	VLIER #S-48A
			1	17		MS171439	PIN, SPRING	CRES	
			1	16		MS171500	PIN, SPRING	CRES	
			1	15		MS171527	PIN, SPRING	CRES	
			1	14		AN816-54D	NIPPLE	AL ALLOY	
			1	13		MS28775-011	SEAL O RING	VITON	1▷
			3	12		MS28775-007	SEAL O RING	VITON	1▷
			1	11		MS28775-010	SEAL O RING	VITON	1▷
			1	10		MS28775-118	SEAL O RING	VITON	1▷
			1	9		MS28775-116	SEAL O RING	VITON	1▷
			1	8			SYRINGE, SAMPLING	CRES	
			1	7			FITTING, BAG SAMP	CRES	
			1	6			CAM, KNOB	ALCOCI-T6	
			1	5			PLUG	ALCOCI-T6	TEFLON COATED
			1	4			SEAL, SYRINGE VALVE	TEFLON	
			1	3			SYRINGE VALVE	ALCOCI-T6	TEFLON COATED
			1	2			KNOB, SELECTOR	ALCOCI-T6	
			1	1			HOUSING	ALCOCI-T6	

LIST OF MATERIAL OR PARTS LIST

SKD-1775

UNLESS OTHERWISE SPECIFIED
DIMENSIONS ARE IN INCHES
TOLERANCES
.X = ±.030, .XX = ±.010, .XXX = ±.005
ANGULAR ±30'
BREAK SHARP EDGES .005-.015
ALL SMALL FILLETS .020-.040R
THREADS PER FED. HNDBK H-28 AND SUPPLEMENTS.
DIMENSIONING PER MIL-STD-8
WELD SYMBOLS PER AN-STD-19
SURFACE ROUGHNESS SYMBOLS PER MIL-STD-10
ALL FINISHED SURFACES 125√

NEXT ASSEMBLY

DRAWN BY	J.P. Evans	2-1-65
CHECKER		
STRESS ENG'R		
AERO THERMO		
DES. ENG'R	M. Wagner	2-1-65
PROJ. ENG'R	[illegible]	2-2-65
MATERIALS		

ARDE, INC.
100 A KENTUCKY RD PARAMUS, N.J.

CHEMICAL URINE VOLUME MEASURING SYSTEM-TYPE V
TWO BAG-REMOVABLE MIXING BAG WITH TRACER CHEMICAL STORED IN SAMPLE BAG

CODE IDENT 05980 | SIZE D | SKD-1775
1/1

This variation has been proposed for the same reasons that the Type III differs from the Type II. They are: ease of storing the system when not in use, and improved reliability (replaceable mixing bag in case of damage). There is, of course, the penalty of increased weight (.208 lb.) and external storage volume (7.42 cu.in.).

The operation of the system will be the same as the Type IV, except that the mixing bag has to be attached at the beginning of the cycle and removed at the end.

3.1.3.6 Type VI - Two Bag System - Removable Mixing Bag with Tracer Injector and Storage Assembly

Layout Drawing: SKD 1776

Operational Block Diagram: Figure 6

The Type VI chemical tracer urine volume measuring system is a two bag system with a 100 ml sample bag and a removable 800 ml mixing bag. This system is similar to the Type II/Type III system, except that the tracer chemical storage and metering pump assembly have been removed from the main body of the valve and attached to the neck of the removable mixing bag.

This arrangement makes the valve assembly more easily stored in the 2.6" I.D. tube shown on the

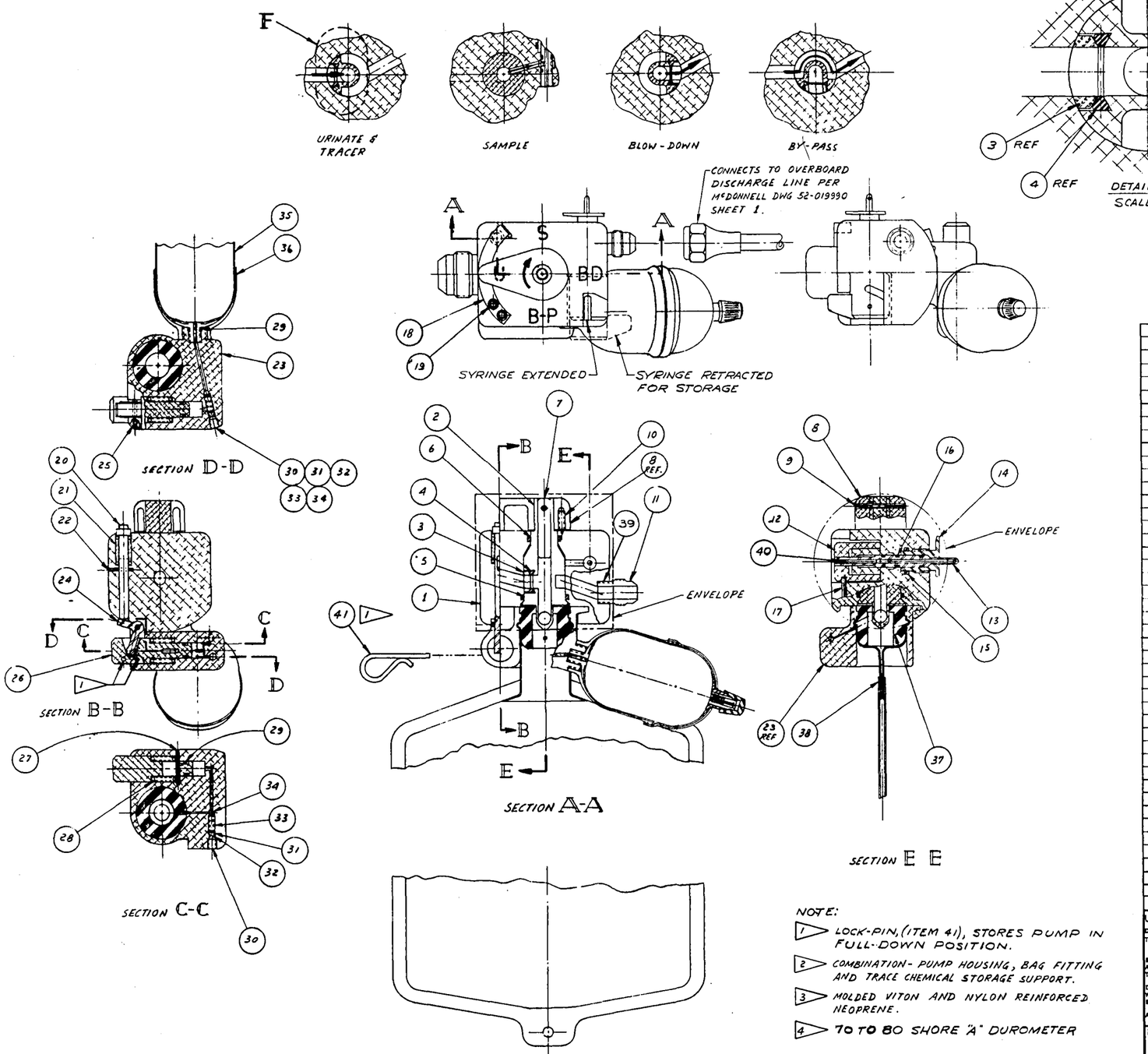

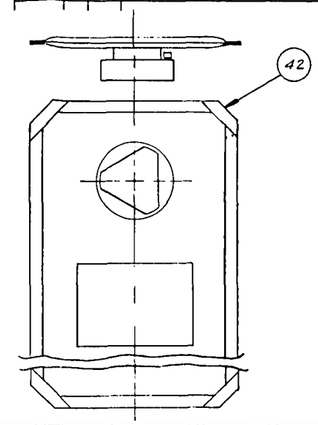

REVISIONS					
E.O. NO.	SYM	ZONE	DESCRIPTION	DATE	APPROVED

QTY REQD PER DASH NO.				ITEM NO.	CODE IDENT	PART OR IDENTIFYING NO.	NOMENCLATURE OR DESCRIPTION	MATERIAL	SPECIFICATION
			1	42		9557-3-485	BAG, SAMPLING		WHIRLPOOL CORP.
			1	41		AN415-1	PIN, LOCK	CRES	1
			1	40		MS171439	PIN, SPRING	CRES	
			1	39			SEALANT		LOCTITE, GRADE C
			1	38			BAG, URINE	3	
			1	37			SEAL, URINE BAG	SILICONE RUBBER	DOW-CORNING 9711 35-45 DURO
			1	36			CONTAINER, BAG	CRES	
			1	35			BAG ASSY, TRACER STOR.		U.S. RUBBER CO.-ES 275
			2	34		MS134352	BALL, (CHECK VALVE)	CRES	PRECISION GRADE
			2	33		MS24585-	SPRING, HELICAL	CRES	
			2	32		MS28775-002	SEAL, O-RING	VITON	4
			2	31			SEAL, PISTON	CRES	
			2	30			SET SCREW, SOC. HD.	CRES	NYLOK, 10-32 × 3/16 LG.
			2	29		MS28775-008	SEAL, O-RING	VITON	4
			1	28		MS24585-	SPRING, HELICAL	CRES	
			1	27		MS171439	PIN, SPRING	CRES	
			1	26			PUMP	AL6061-T6	TEFLON COATED 1
			1	25		MS171434	PIN, SPRING	CRES	
			1	24			PISTON-ACTUATING LEVER	CRES	
			1	23			HSG. 2	AS SHOWN	
			1	22		MS171436	PIN, SPRING	CRES	
			1	21		MS24585-	SPRING, HELICAL	CRES	
			1	20			PUMP ACTUATING PIN	CRES	TEFLON COATED
			2	19		MS16995-3	SCREW, CAP, SOC. HD.		#4-40UNC-3A × 1/4 LG.
			1	18			SPRING-LEAF (PUMP ACTR)	CRES	
			1	17		MS171527	PIN, SPRING	CRES	
			3	16		MS28775-007	SEAL, O-RING	VITON	4
			1	15		MS28775-011	SEAL, O-RING	VITON	4
			1	14			FITTING-BAG, SAMP.	CRES	
			1	13			SYRINGE, SAMPLING	CRES	
			1	12			CAM KNOB	AL6061-T6	
			1	11		AN816-5-4D	NIPPLE	AL. ALLOY	
			1	10			DETENT ASSY	CRES	VLIER #S-48A
			1	9		MS171500	PIN, SPRING	CRES	
			1	8			KNOB, SELECTOR	AL6061-T6	
			1	7			PLUG	AL6061-T6	TEFLON COATED
			1	6		MS28775-016	SEAL, O-RING	VITON	4
			1	5		MS28775-018	SEAL, O-RING	VITON	4
			1	4		MS28775-010	SEAL, O-RING	VITON	4
			1	3			SEAL, SYRINGE VALVE	TEFLON	
			1	2			SYRINGE VALVE	AL6061-T6	TEFLON COATED
			1	1			HOUSING	AL6061-T6	

LIST OF MATERIAL OR PARTS LIST

NOTE:

1. LOCK-PIN, (ITEM 41), STORES PUMP IN FULL-DOWN POSITION.
2. COMBINATION-PUMP HOUSING, BAG FITTING AND TRACE CHEMICAL STORAGE SUPPORT.
3. MOLDED VITON AND NYLON REINFORCED NEOPRENE.
4. 70 TO 80 SHORE "A" DUROMETER

UNLESS OTHERWISE SPECIFIED
DIMENSIONS ARE IN INCHES
TOLERANCES
.X = ±.030, .XX = ±.010, .XXX = ±.005
ANGULAR ±30'
BREAK SHARP EDGES .003-.015
ALL SMALL FILLETS .020-.040R
THREADS PER FED. HNDBK H-28 AND SUPPLEMENTS
DIMENSIONING PER MIL-STD-8
WELD SYMBOLS PER JAN-STD-19
SURFACE ROUGHNESS SYMBOLS PER MIL-STD-10
ALL FINISHED SURFACES 125√

NEXT ASSEMBLY

DRAWN BY	J. MILLER	1/10/65
CHECKER		
STRESS ENG'R		
AERO THERMO		
DES. ENG'R	J. Wagner	1-10-65
PROJ. ENG'R		
MATERIALS		

CHEMICAL URINE VOLUME MEASURING SYSTEM - TYPE VI
TWO BAG - REMOVABLE MIXING BAG AND TRACER INJECTOR AND STORAGE ASSEMBLY

D SKD-1776

1/1

SKD-1776

71

OPERATIONAL BLOCK DIAGRAM

CHEMICAL URINE VOLUME MEASURING SYSTEM

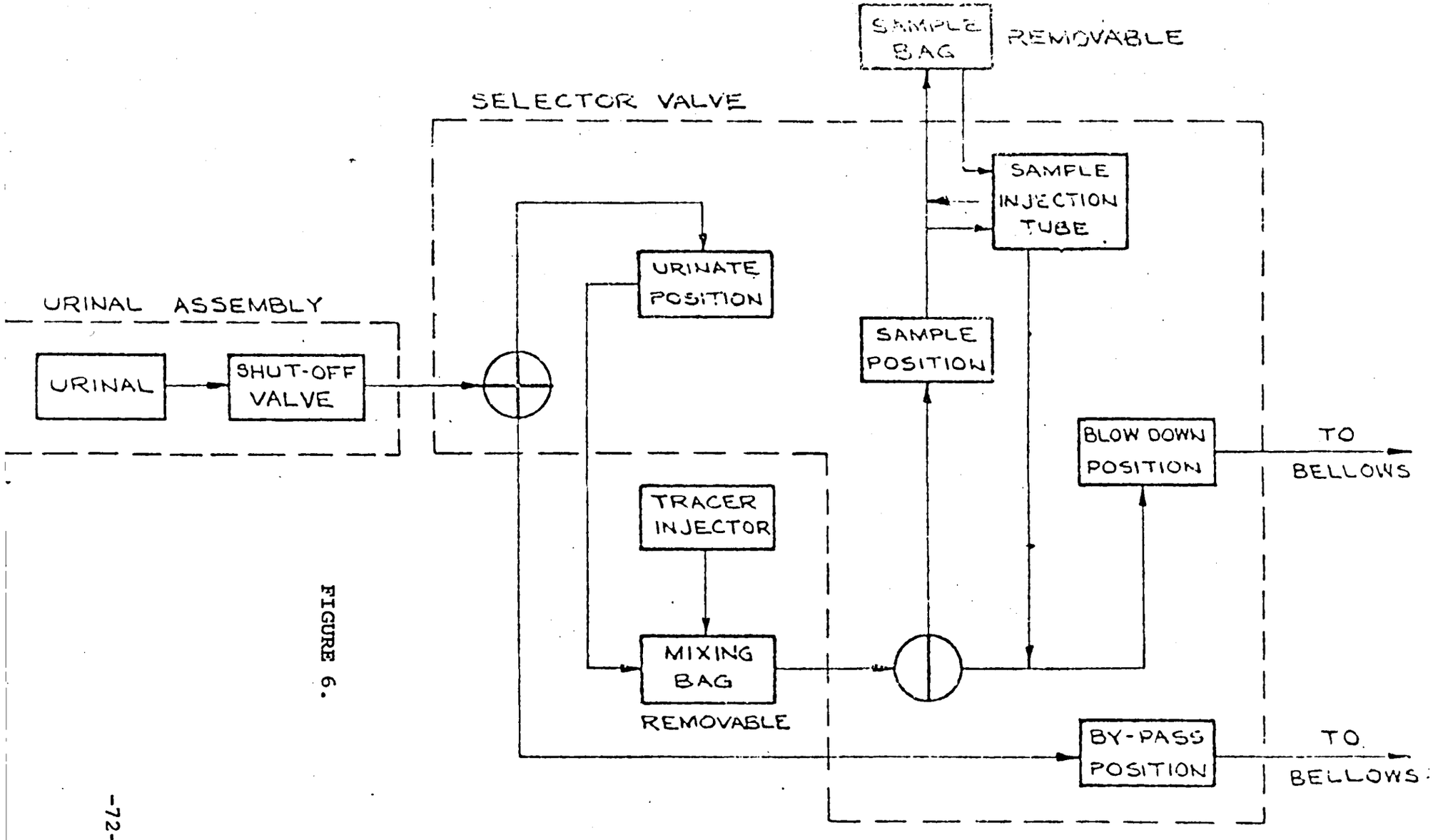

FIGURE 6.

TYPE VI - TWO BAG SYSTEM - TRACER INJECTOR AND MIXING BAG COMBINED.

McDonnell drawing 52-019990. The removal of the long tracer chemical storage tube from the center of the urine exhaust line will eliminate possible interference between the line and the tube.

Description of Components

Mixing and Sample Bags

The removable mixing bag is of special design incorporating a tracer chemical storage container and a metering pump similar to those used in the Type II and Type III systems. The breach block type mixing bag attachment will be made in an isosceles triangle instead of an equilateral triangle so that there is only one way that the bag assembly can be attached. This is required to insure that the tracer chemical metering pump connecting pin will line up with the right angle lever which moves the pump piston.

The sample bag and sample bag attachment method would be the same as previously described.

Function Selector Valve

The Type VI function selector valve is

identical to that used in the Type III valve, except that the metering pump system and check valve assembly are removed from the main body of the valve and incorporated into the removable bag assembly. The metering pump is actuated by a spring loaded pin in the main body of the valve through a 90° bell crank. This pin is in turn actuated by the valve function selector knob as was the piston in the Type III valve.

Method of Operation

The method of operation of the Type VI system is virtually identical to that of the Type III system.

System Evaluation

Detailed information concerning performance characteristics of this system is given in Appendix C, pages C-2 thru C-5, and is summarized in Table 12 of this section.

The over-all accuracy and reliability of this system are the least satisfactory of the six types discussed. The weight and volume are the highest of the Types II through VI, but are still much better than the Type I.

3.1.4 Systems Comparison

There are a number of interesting observations that can be made concerning the various systems.

1. The Type I dual purpose bag system is attractive because of its simplicity both in construction and operation. This simplicity results in high reliability and high accuracy. Weight and volume characteristics of this system do, however, penalize it heavily with respect to the other systems.

2. The Type II and Type III systems differ from each other only with respect to handling of the sample bag. Although their weight and volume characteristics compare in a satisfactory manner with the other systems, they compare less favorably based on reliability and accuracy. These two systems do have the significant advantage of simplified operation. An important consideration with respect to these systems is the fact that the long cylindrical tracer chemical storage container must be withdrawn from the coiled urine transport hose simultaneously with the extension (uncoiling) of the hose itself. This may result in a "binding" between the storage container and the hose, the so-called "Chinese finger" condition. The crewman may be forced to uncoil

the container/hose to ease withdrawal. This may be awkward and time consuming. However, in order to extend the hose sufficiently to place the urine reservoir in position, the hose must be manually uncoiled; thus, this penalty may not be applicable to the Type II and Type III systems.

3. The Type IV and Type V systems also differ from each other only with respect to handling of the sample bag. These systems both compare favorably with the others with respect to accuracy, reliability, weight, and volume. They suffer only with respect to increased complexity and duration of operation.

4. The Type VI system was designed specifically to obviate the possible "Chinese finger" problem of the Type II/Type III systems. This is accomplished with only a small weight or volume sacrifice but with reliability and accuracy penalties.

A comparison was made of these systems on a semi-quantitative basis. The first step was to establish the relative importance or "weight" of the various system performance parameters. For example, the following weighting table was postulated.

Performance Parameter	Relative Weight Factor
Reliability	10
Weight	8
Volume	7
Number of Operations	5
Accuracy	4

It was then possible to determine ratios of the actual values of the performance parameters for various systems. For example, call the system with the lowest weight (1) and ratio the actual weights to the lowest weight. Similarly for volume, accuracy, and number of operations. For reliability use the lowest value of (1-R) as unity. The product of the "relative weight factor" for each performance parameter times the unitized performance value of each system gives the weighted evaluation points. That system having the lowest sum of these evaluation points is the system of choice. The results of these calculations are listed in Table 11.

This tabulation indicates that system Types IV and V would be preferred with Type VI the least desirable.

The following points must be made, however:

1. If different "relative weight factors" were used, different systems would appear more desirable.

TABLE 11

WEIGHTED EVALUATION POINT SYSTEM

TYPE	WEIGHT** (8)	EXTERNAL STORAGE VOLUME* (7)	ACCURACY (4)	RELIABILITY (10)	NO. OF OPERATIONS (5)	TOTAL POINTS
I	8 (2.430)	7 (3.24)	4 (1.000)	10 (1.000)	5 (1.000)	61
II	8 (1.058)	7 (1.00)	4 (2.065)	10 (2.910)	5 (1.074)	58
III	8 (1.084)	7 (1.056)	4 (2.300)	10 (2.690)	5 (1.111)	58
IV	8 (1.000)	7 (1.019)	4 (1.314)	10 (1.750)	5 (1.677)	46
V	8 (1.045)	7 (1.075)	4 (1.553)	10 (1.310)	5 (1.630)	43
VI	8 (1.197)	7 (1.127)	4 (2.400)	10 (3.44)	5 (1.111)	67

* Storage volume required in excess of 133 cubic inches required for 202 sample bags for present Gemini U.T.S.

** Numbers in brackets refer to arbitrarily assigned relative importance of various system performance parameters. Numbers in each column are the unitized ratios of system performance parameter values for each system type.

TABLE 12

SYSTEM EVALUATION SUMMARY

	Collection/Mixing BAG TYPES	TRACER	No. Operations In Use	Number Of Parts	Number Of Bags (Including 20% spares sample bags)	Estimated Accuracy % Error	Reliability (Estimated) End of Mission 336 Hours	Weight Pounds	Volume External Cu.In.
TYPE I	1- Two Compartment, removable	In Mixing Bag	27	24	202 Comb.	Max.±1.79 Min.±1.15	.99968	11.81	457.
TYPE II	1- 100 ml, Removable(sample) 1- 600 ml, Fixed	Injected	29	53	202 Sample 1 Mixing	Max.±3.70 Min.±2.49	.99907	4.69	133.
TYPE III	1- 100 ml, Removable (") 1- 600 ml, Removable	Injected	30	44	202 Sample 2 Mixing	Max.±4.12 Min.±2.49	.99914	4.82	140.42
TYPE IV	1- 100 ml, Removable (") 1- 600 ml, Fixed	In Sample Bag	45	36	202 Sample 1 Mixing	Max.±2.36 Min.±1.15	.99944	4.43	137.
TYPE V	1- 100 ml, Removable (") 1- 800 ml, Removable	In Sample Bag	44	29	202 Sample 2 Mixing	Max.±2.73 Min.±1.15	.99958	4.64	144.42
TYPE VI	1- 100 ml, Removable (") 1- 800 ml, Removable	Injected	30	52	202 Sample 2 Mixing	Max.±4.29 Min.±2.49	.99890	5.31	149.90
PRESENT SYSTEM	None	None	28	--	0	Spec.± 10		3.58 Bag .25 Injector 3.83 Total	133.

2. This evaluation did not consider certain factors not yet quantified, i.e., the "Chinese finger binding" of Types II and III, or the long operating times of Systems IV and V.

3.1.4.1 System Compatibility and Integration

The six proposed systems are fully compatible with the UTS as delineated on McDonnell Aircraft drawing 52-019990. The only changes required in the existing system are the deletion of: (1) the 7/8 - 14 fitting at the urine receiver end of the coiled urine transport line, and (2) the sampling assembly and its fittings. The coiled urine transport line is now terminated in a 1/2 - 20 "B" nut flared fitting as shown on the back of the valve assembly drawings SKD 1771 through SKD 1776. This nut will attach directly to a male fitting on the valve body while the urine receiver assembly will screw directly on to the 7/8 - 14 threaded male fitting on the inlet end of each valve body.

3.1.5 SELECTION OF SYSTEM FOR DEVELOPMENT

After presentation of the six (6) design feasibility studies to NASA, a meeting was held between NASA/MSC/CSD and ARDE, INC. and the basic Type III CUVMS was jointly selected for development, fabrication and test in Phases II and III. Major considerations in this selection were the low number of crewman manipulations required and changes in evaluation weighting factors resulting from the NASA-ARDE discussions.

NASA requested that some features of this system be redesigned to provide more flexibility of utilization for missions of varying duration. These design changes include:

a. The tracer storage component is to be redesigned for replaceability.

b. The tracer storage component capacity will be reduced from 60 ml to approximately 20 ml. This will enable one, two, and three components to be used as required for missions ranging from two days to 14 days, rather than one tracer storage component to cover the maximum mission duration.

c. The selector valve design is to be modified to utilize the replaceable tracer storage component.

d. The sampling probe diameter is to be increased from .125 dia. to .187 dia. Early testing with

the Gemini UTS indicated that flow passages were too small to adequately handle the required flow rates into the sample bag.

It was also recognized that one of the main problems would be in providing a connection between the valve and the replaceable tracer storage component to minimize leakage, holdup volumes, and the possibility of introducing a gas bubble during replacement. In addition, the connection should be mechanically rugged to withstand the shock and vibration environment and also provide reliable and convenient operation by the crewman. Some of these considerations also led to the desirability of the basic Type III system in preference to the alternatives that had been evaluated.

3.2 PHASE II - DESIGN AND FABRICATION OF MOCK-UPS

During this phase of the program, two (2) mock-ups were fabricated to establish weight, shape, and volume relationships and configurations. Another purpose of the mock-ups was to determine and prove the interface compatibility of the ARDE system with the Gemini UTS. The configuration of the mock-up was substantially the same as that depicted in drawing SKD 1773 of system alternate III, except for two obvious external features. These were the change in form factor of the tracer storage accumulator as determined by the agreed upon new design requirements, and also the elimination of the lock pin through the metering pump. See figure 7 for a picture of the final mock-up.

3.2.1 Drain Line

Early in the mock-up fabrication an immediate problem of mechanical interference arose between the tracer storage accumulator and the coiled drain line. To permit stowage in the launch tube, the exhaust line connection from the valve had to be offset. Instead of the axis of the connection being parallel to the accumulator axis, a 10° offset was necessary. See figure 7.

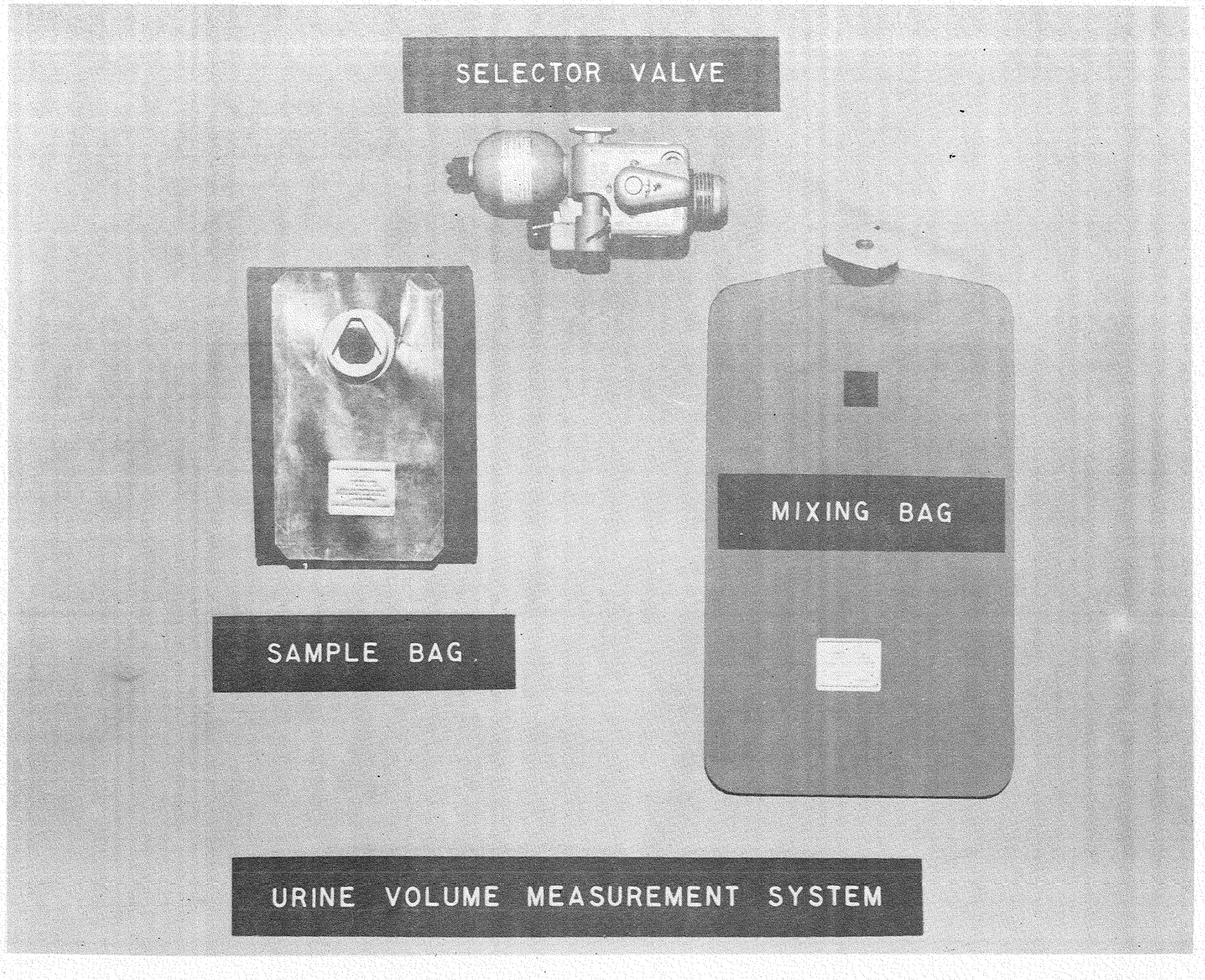
SELECTOR VALVE
MIXING BAG
SAMPLE BAG
URINE VOLUME MEASUREMENT SYSTEM

FIGURE 7

3.3 PHASES III AND IV - DESIGN AND FABRICATION OF PROTOTYPE AND FLIGHT QUALIFIED SYSTEMS

During the detail design and fabrication of the Phase III prototypes in accordance with the concepts of Phases I and II, certain changes and improvements were incorporated. These changes were a result of both NASA evaluations of the mock-ups, plus some specific problems encountered in system component fabrication. Where feasible, the modifications were immediately introduced; however, in some areas, because of schedule impact, it was jointly decided between NASA and ARDE to wait until the flight units of Phase IV were to be built, since final design of the flight hardware was also proceeding while prototype fabrication testing was still under way.

The photographs of figures 8 through 9 show the salient features of the prototype components. Figure 10 shows the complete system. For clarity of discussion, the evolution of the design will be described chronologically on a component or sub-system basis.

Numerous tests were performed during this phase of the program to gain experience prior to final flight hardware manufacture and qualification testing. These tests will be described under the appropriate sub-system heading.

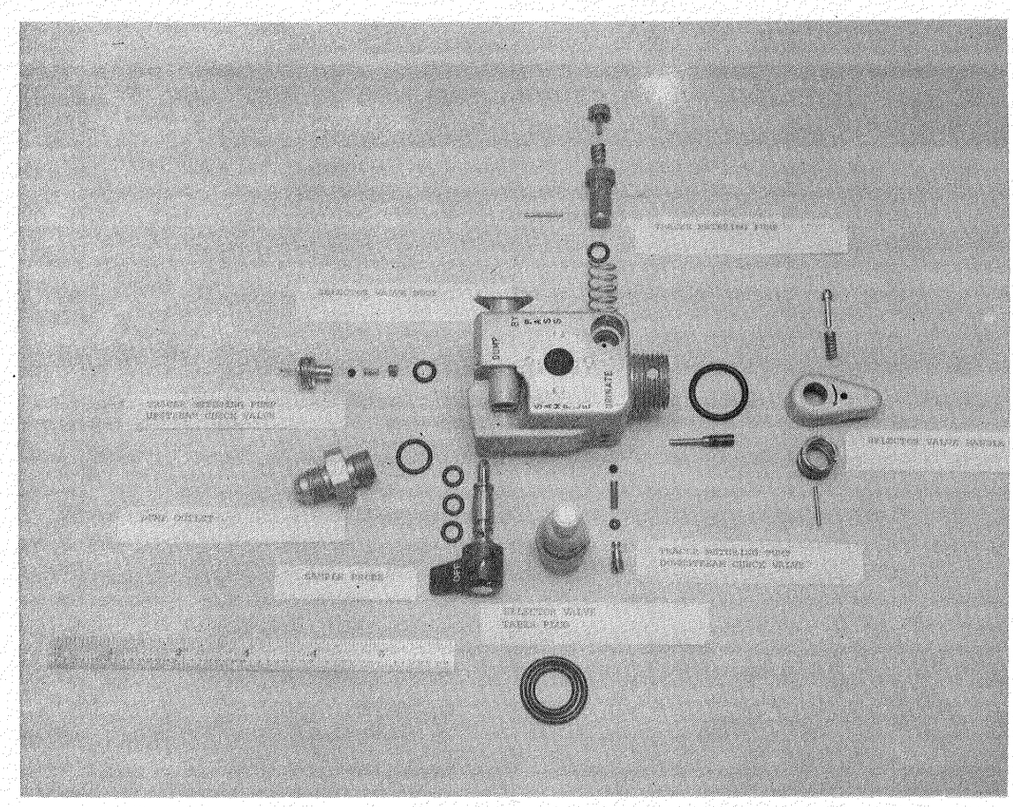

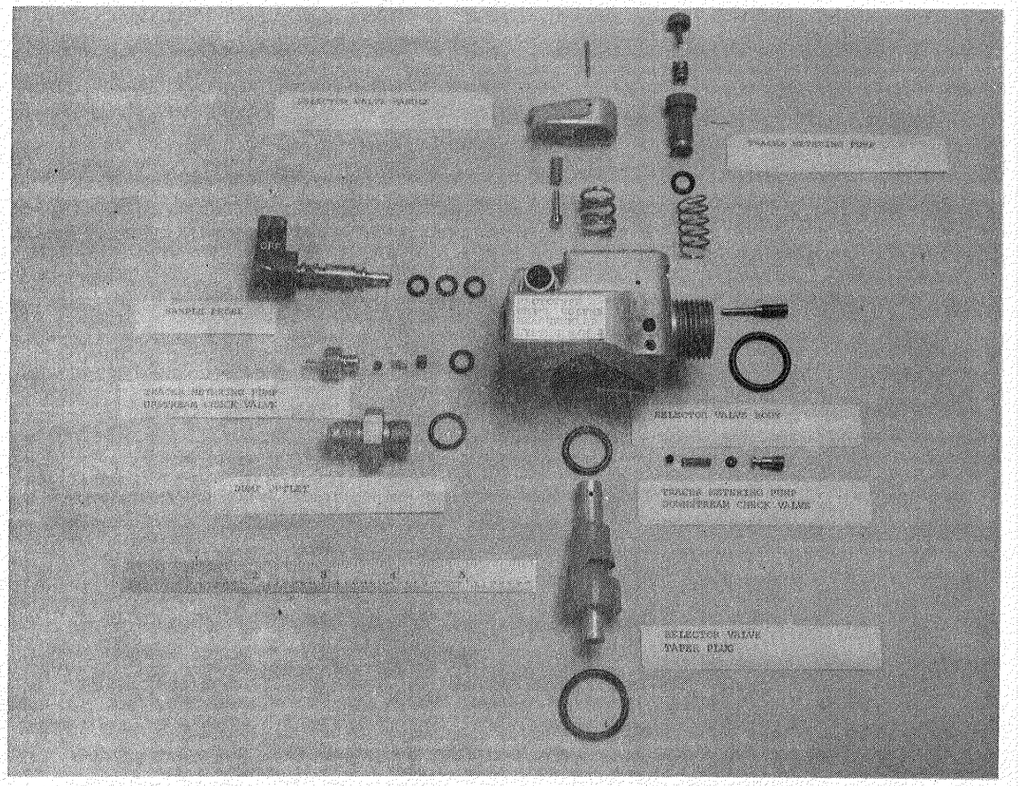

Prototype Components

FIGURE 8

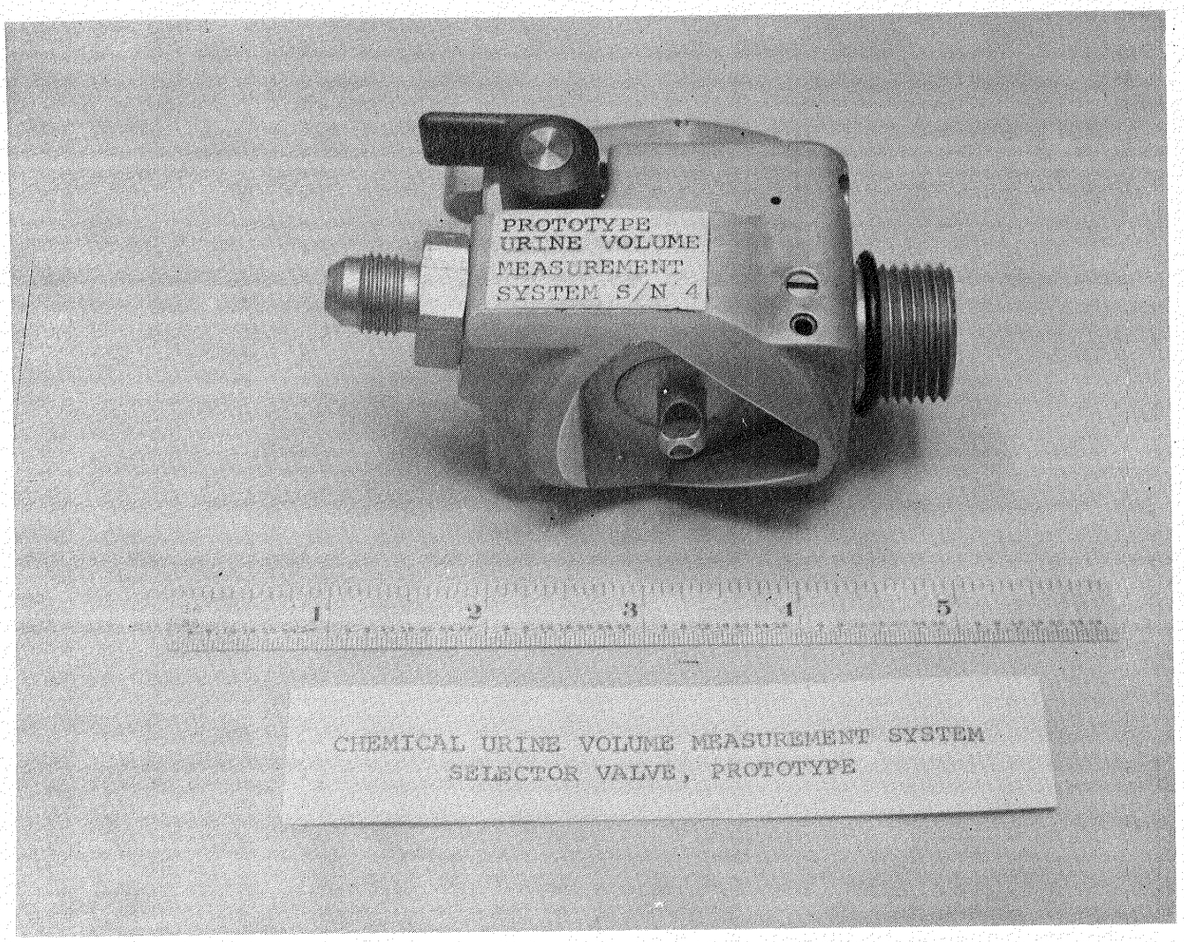
PROTOTYPE
URINE VOLUME
MEASUREMENT
SYSTEM S/N 4
1 2 3 4 5
CHEMICAL URINE VOLUME MEASUREMENT SYSTEM
SELECTOR VALVE, PROTOTYPE

FIGURE 9

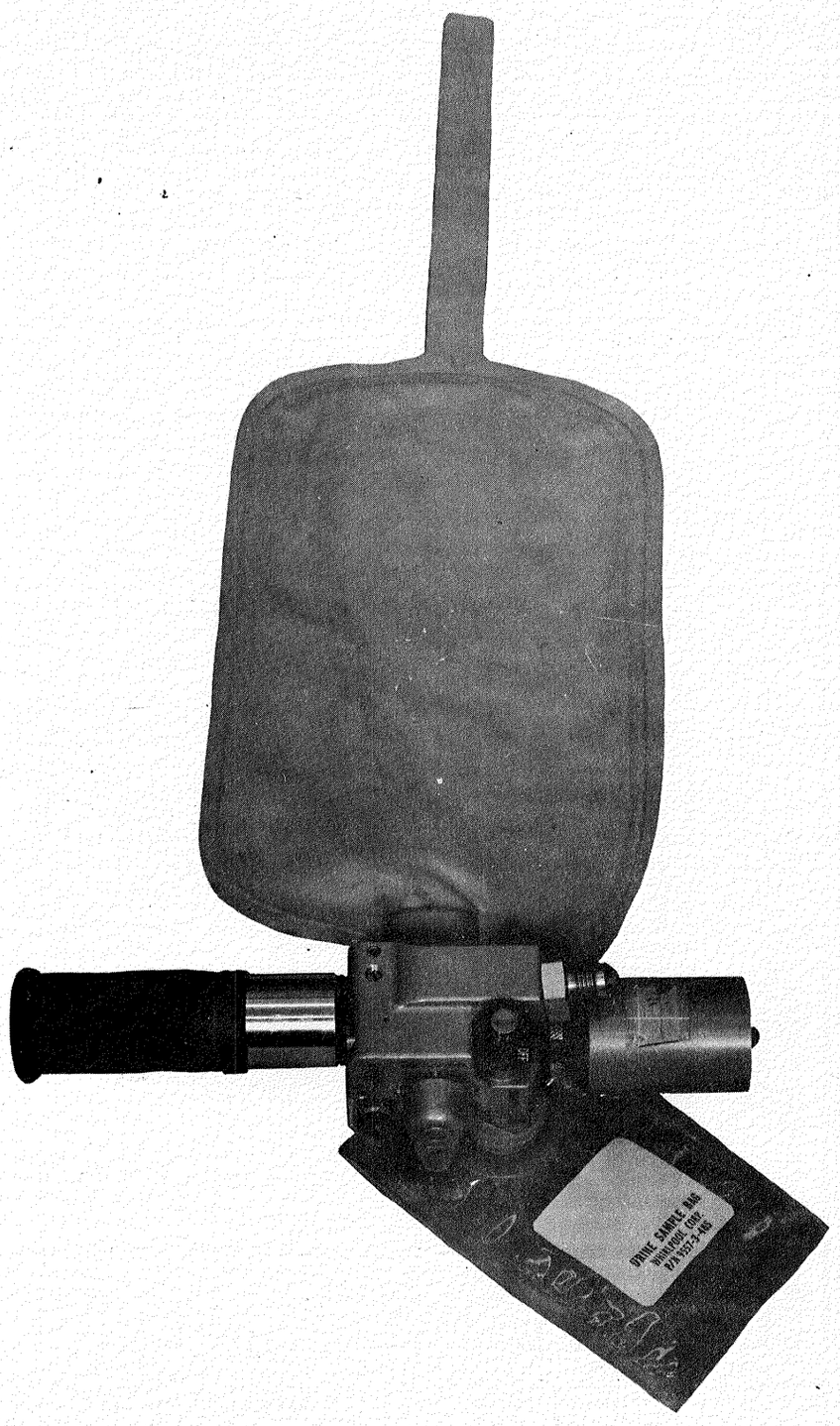

Prototype CUVMS

FIGURE 10

3.3.1 Selector Valve

3.3.1.1 Metering Pump and Check Valve System

An early design recommendation by NASA, based on review of the mock-ups, led to the inclusion of a tracer metering pump actuating button shield to prevent accidental manual injection of tracer into the system. The photographs of figures 11, 12 and 13 show the configuration of this shield.

Subsequent to completion of the prototype units which enabled system testing, several problems arose with the tracer metering pump system. See drawing SKB 10040 for a schematic representation of the entire valve including the check valves and metering system. Early tests showed that the reliable feeding of a constant amount of tracer to the urine passage was unsatisfactory due to slight leakage of the check valves. The original design of the check valves used spring loaded stainless steel balls, and the very stringent requirement of zero leakage was essential when the check valves closed.

Leakage of tracer through the upstream check valve back into the tracer storage accumulator when the metering pump plunger was depressed, caused an inadequate and/or unreproducible amount of tracer to be introduced into the urine passage. The seating of the ball in its seat in the reverse (non-flow) direction

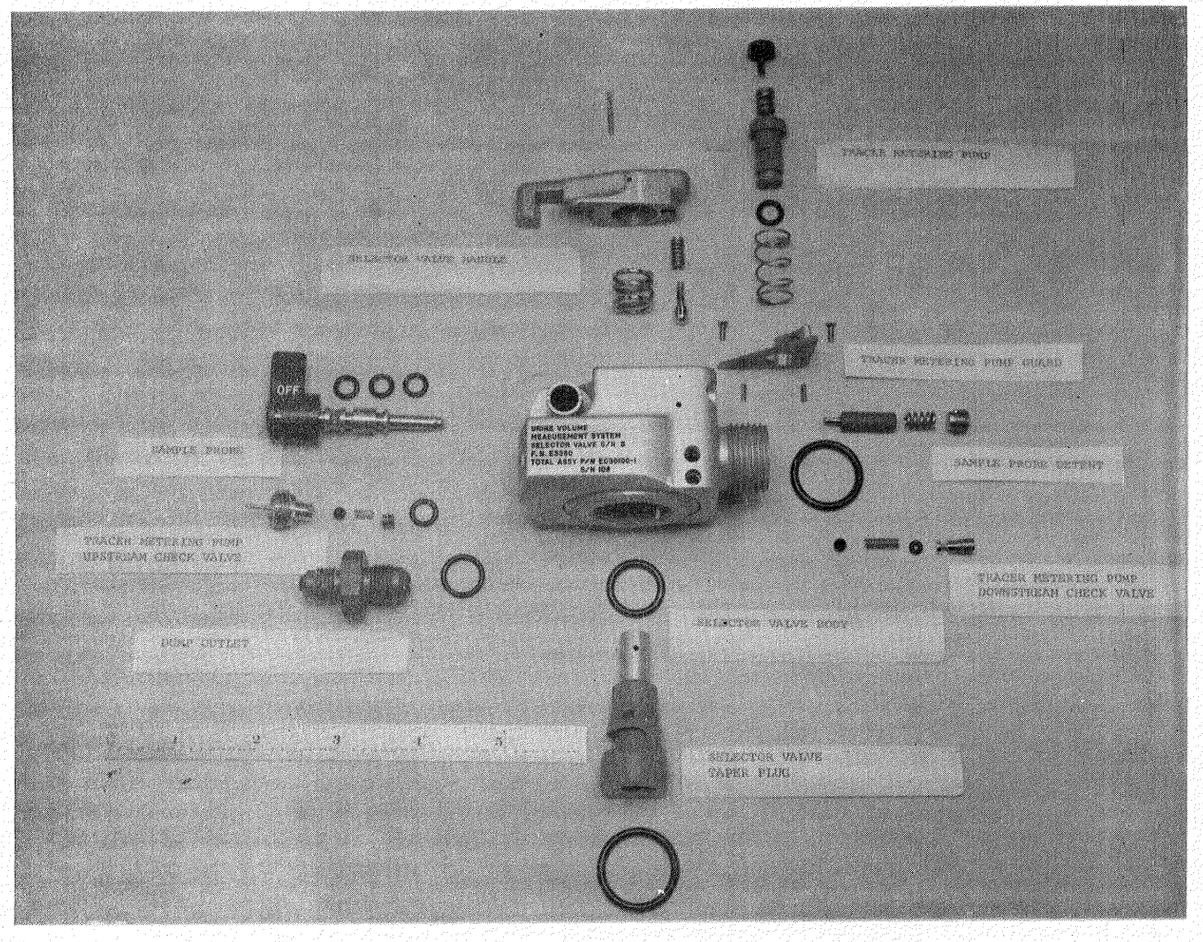

SELECTOR VALVE - EXPLODED VIEW

FIGURE 11

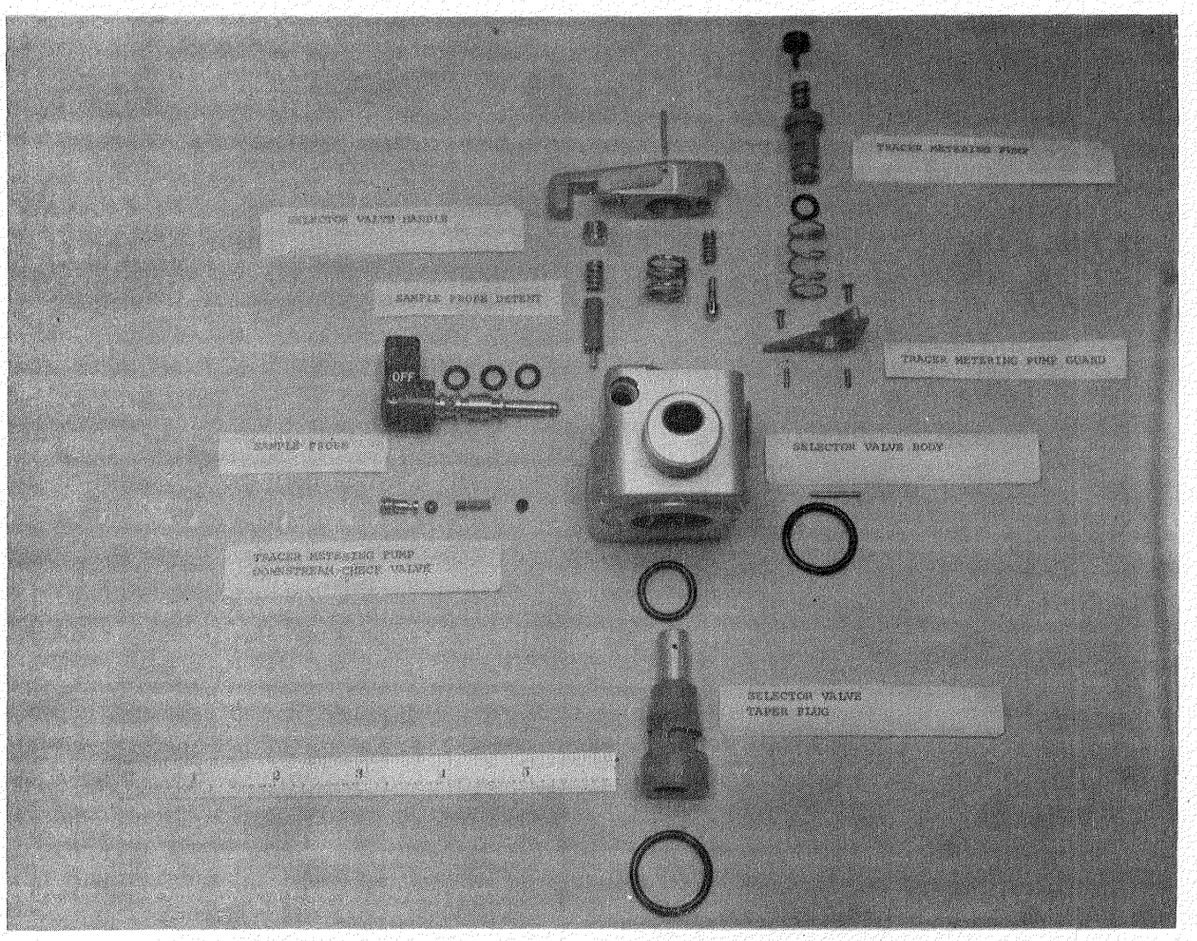

SELECTOR VALVE - EXPLODED VIEW

FIGURE 12

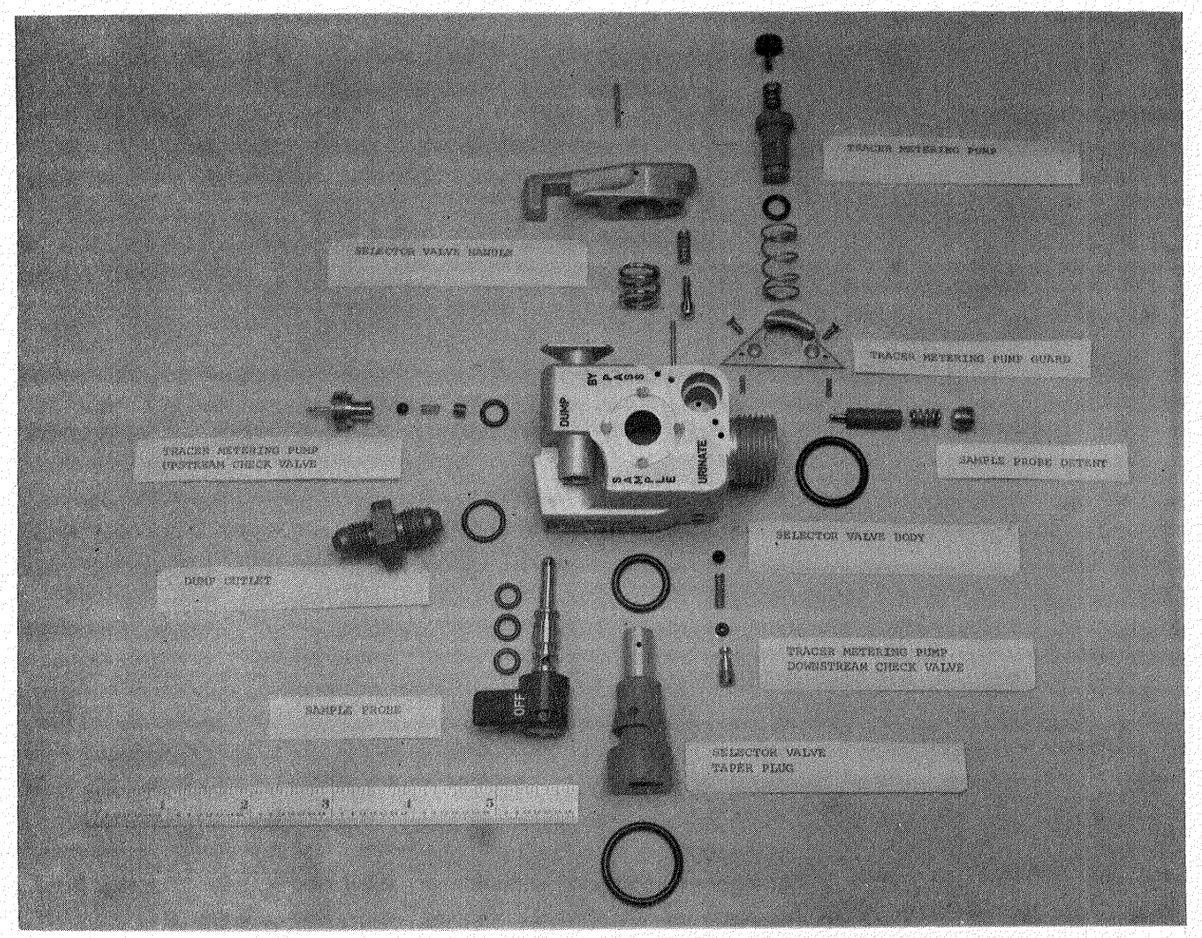

SELECTOR VALVE - EXPLODED VIEW

FIGURE 13

GEMINI URINE TRANSFER MEASUREMENT SYSTEM SCHEMATIC
NASA CONTRACT NAS 9-3904

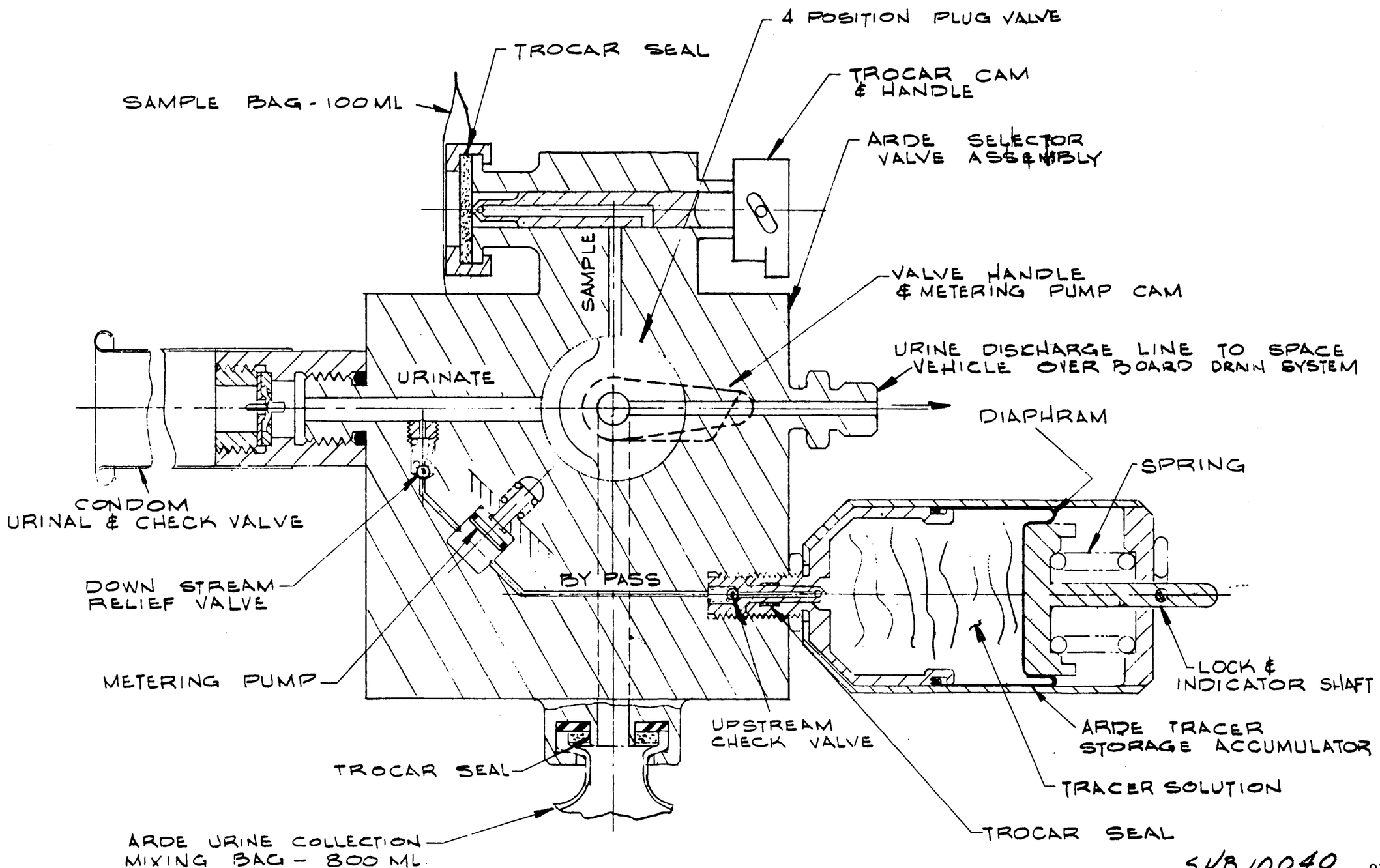

SKB 10040

was not consistent. The volume measurement accuracy specification demanded that no leakage take place in the check direction from 5 psig to 35 psig. The testing was done outside the valve in a fixture using compressed dry nitrogen throttled down to the necessary pressures by means of a regulator. Leakage was monitored by observing bubbles issuing from an outlet hose submerged in a beaker of distilled water.

Leakage was also troublesome with the downstream check valve (actually a pressure relief valve) which must remain fully closed until the metering piston is actuated. Then the valve opens to permit the tracer to flow into the urine passage when the metering piston is depressed. The pressure requirements were for no leakage below 25 psig minimum and for full flow at 35 psig. This represents a safety margin above the approximately 16 psig maximum delivery pressure of the accumulator. The leakage test procedure is similar to that for the upstream valve except that the downstream valve is integral with the selector valve body and the testing was done while installed in the selector valve. These tests showed leakage at pressures slightly below that of the fully charged accumulators.

Efforts to correct the tracer leakage problem revolved around three different approaches. These were a change in seat configuration, a change in ball material, and a change in valve design. The various design

combinations are discussed below in their evaluated sequence to present a logical development of the design.

a. As previously mentioned, the first design consisted of a stainless steel ball on a sharp edge machined seat, with the resulting flow deficiencies already noted.

b. A second approach to the problem was to coin the sharp edges of the seat with a hardened ball shapped tool. This formed a spherical beveled seat to match the contour of the sealing ball. Though there was a slight improvement in sealing, this method did not provide zero leakage.

c. Substitution of precision nylon and Teflon balls on the coined seat did not remedy the operation of the upstream valve. The downstream relief valve showed slight additional improvement.

d. A flapper type closure (duck bill check valve) was tried for the upstream valve, but this configuration permitted too great and non-reproducible variation in pressure between the sealed position and the open flow position.

e. A flat disc type of seal was tried for the upstream check valve and tests showed that it did seal adequately. However, there was non-reproducibility in closing pressures because of uncontrollable non-reproducibility in the disc orientation in the open position.

f. Experiments were then tried with soft elastomeric valve seats. A viton insert was fabricated to act as a soft seat in the downstream relief valve in conjunction with a stainless steel ball. The results were not wholly satisfactory. However, this arrangement, which functioned best up to that point of experimentation, together with a flapper seal in the upstream valve, enabled a first evaluation of the tracer metering function.

In order to get a reasonable degree of tracer metering volume accuracy, the tracer metering piston was actuated a number of times in succession by rotating the selector valve handle, and the total tracer collected in a graduate was measured. This procedure was repeated until the tracer storage accumulator was fully discharged. A typical run gave results as follows:

Cumulative Volume Delivered	Net Volume Delivered for Successive Metering
3.1 ml	3.1 ml
6.0	2.9
8.8	2.8
11.7	2.9
14.4	2.7
17.4	3.0
20.3	2.9

Average delivered volume: 2.9 ml

The variation in delivered volume may have been due to variable holdup on the passage walls inside the selector valve, to a variation in opening time for the downstream relief valve, or to slowness of response of sealing of the upstream check valve. It may be noted that the design figure for tracer volume is 3.0 ml, and the average actual delivery deviates only 3.3% from this figure. The important criterion of successful operation is, of course, the reproducibility can only be fully demonstrated with actual volume measurements using tracer, since the use of laboratory graduates for measuring the delivered tracer volume will only give an approximation of the actual value.

g. Precision viton and ethylene-propylene elastomer check valve balls were then tried on coined metal seats with indications of marked improvement on sealing. For confirmation of the use of these materials, tracer metering tests were performed using both materials in the check and relief valves, with hard seats lapped smooth to provide a seating surface conforming to the check valve ball diameter. The results indicated that the e-p ball gave slightly more consistent metering volume than viton balls. In addition, the viton balls seem to take a slightly higher compression set than the e-p balls, and it was decided that the testing would be continued with the e-p balls. Approximately three hundred cycles of 360 degrees rotation of the selector valve handle (through all operating positions) with a charged and recharged tracer storage accumulator attached, resulted in a tracer delivery of 2.8 to 2.9 ml for each 10 rotations. The variation of ± 1.8% from the average measurement was probably due to variable hold-up on the passage walls inside the valve. This measuring method is not sensitive enough to determine the volume of individual tracer injections which had to be done by actual calibration of the CUVMS using tritiated tracer. Part of the variation is also probably due to

the precision in reading these volumes in the collection graduate. It may be noted that the reproducibility is much better than noted previously for the stainless ball and soft valve seat (see paragraph f).

Compatibility tests were performed with viton and e-p balls immersed in 50% propylene glycol-50% water solution at room temperature, and at 210°F. Soaking for several days showed no weight change within the limits of sensitivity of the analytical balance used to determine any effect of the tracer solution on the check valve ball material (±0.0002 gm). Both materials could probably serve satisfactorily, but as noted above, the decision was made to continue further tests with the e-p balls as the final design solution because of the lower compression set observed.

h. Repeated tests with the use of a soft seal insert in the selection metering valves and a precision metal ball, using both viton and silicone rubber of different durometers showed that this approach was not as good as the use of the elastomer balls on the hard seat.

i. The use of viton and e-p balls with a soft seat (viton) in the check and relief valves was also tested, but low tracer volumes and

higher variability of metered tracer were encountered, and this approach was dropped in favor of the combination described in para. g.

j. Prototype selector valve (S/N 3) of the Chemical Urine Volume Measurement System was subjected to 1100 tracer metering cycles, involving the same number of complete 360° rotations of the selector valve handle. The volume of tracer delivered for repeated sets of ten (10) rotations remained at 2.8 to 2.9 ml throughout the test, indicating a high degree of reliability of the metering mechanism and the selector valve assembly. This testing also involved recharging of the tracer storage accumulator approximately 18 times, and no difficulty or seal leakage was encountered with this component.

k. For an increased margin of reliability, and to allow easier adjustment of the valve settings, the choice of either .125 diameter or .156 diameter e-p balls was permitted. Due to local irregularities in the balls and/or the seats, the selection of the balls on an "as required" basis greatly facilitated the calibration prodecure and reproducibility.

Some of the experimental hardware can be seen in figures 14 & 15. Figure 14 shows a check

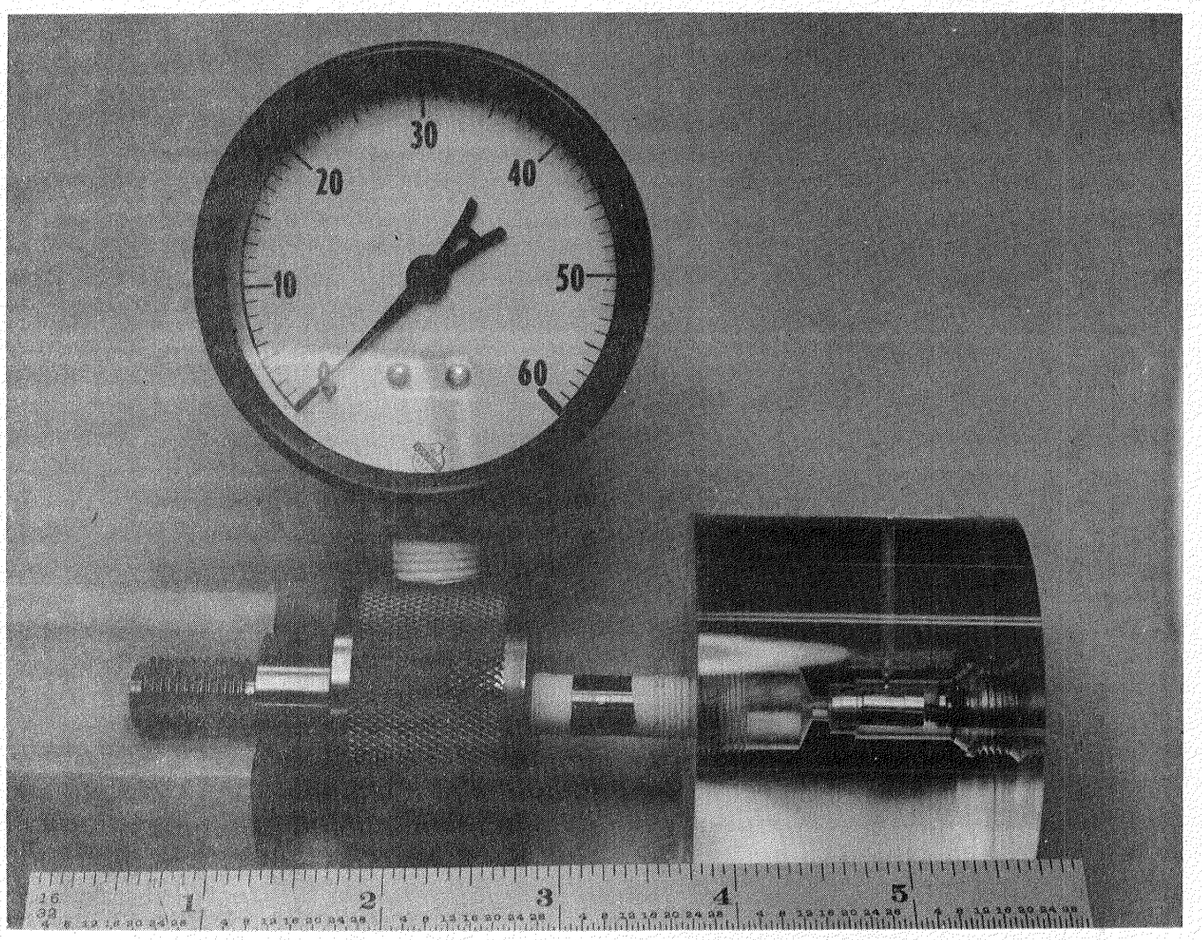

Check Valve Seat Configurations

FIGURE 14

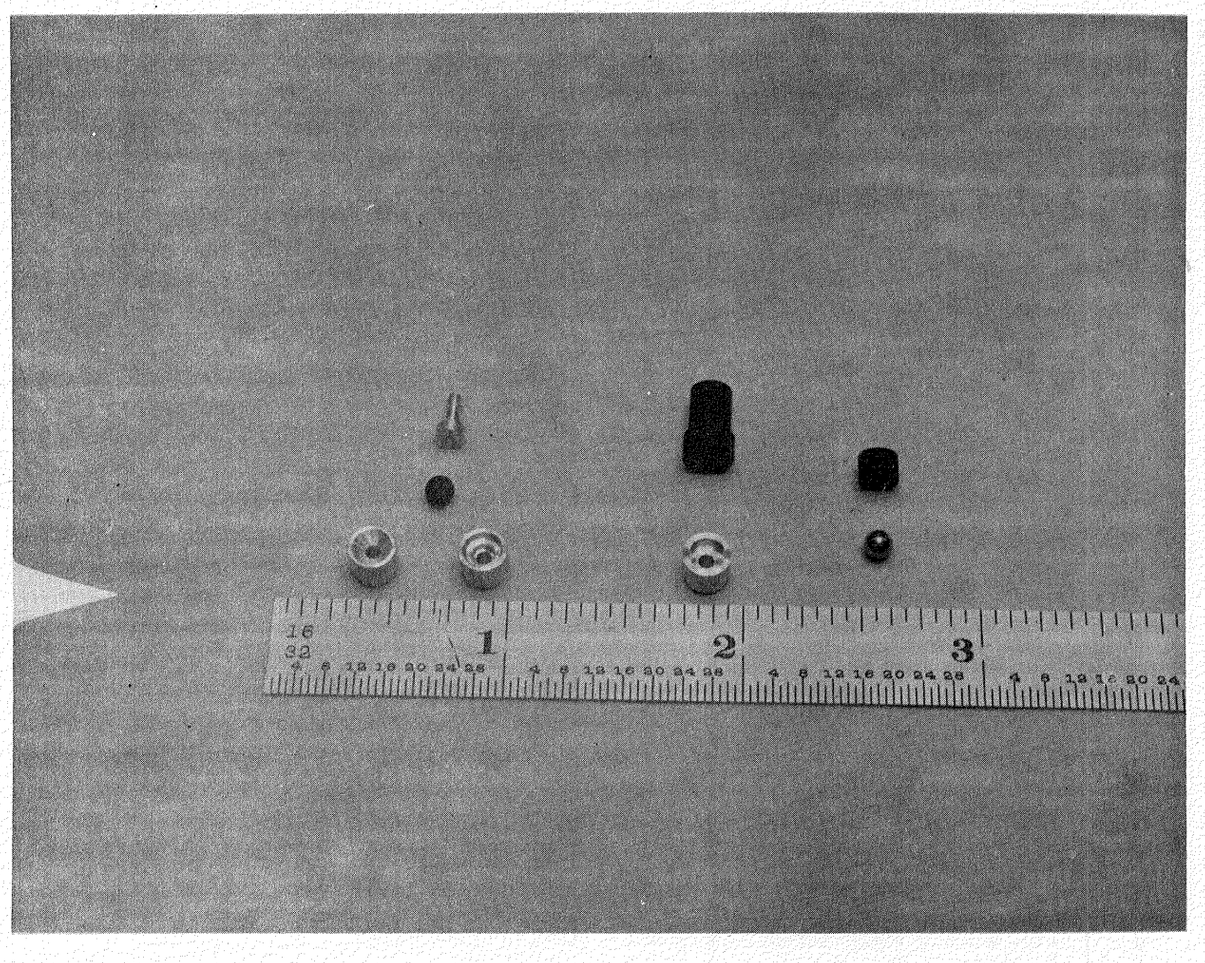

Check Valve Seats and Balls

FIGURE 15

valve seat configuration that was machined in a clear acrylic plastic, through which the action of the check valve was observed. Figure 15 shows some of the various balls and check valve seats that were tested.

3.3.1.2 Sampling System

The concept of the sampling device was developed from the one used on the early Gemini system and was incorporated with minor modifications as an integral part of the selector valve. The interface was to remain compatible with the GFE sample bag, while the design principle of a probe piercing a serum-bottle type seal was maintained. See drawing SKB 10040 for a functional schematic.

Three major areas requiring design changes and improvements became apparent during prototype system testing. These were the sample probe operating lever, the probe flow passage exit ports, and the attaching flange on the valve body.

a. Because of resistance of the sample bag seal to penetration by the sample injector needle, a detent was designed for the extreme positions of the sample probe operating lever. This provided more positive holding action and minimized accidental dislodgement of the lever.

In addition, the detent also provided a more positive feel for the crewman in the operation of the lever with his gloved hand. The detent consisted of a Teflon coated plunger with a polished ball end, loaded by a spring into a machined depression on the probe shaft. The load on the spring was adjustable to give the desired detent action. Once the proper setting was achieved, Loctite was used to maintain the adjustment position. The detent was applied to both the retracted and extended positions of the probe. After prolonged use with the detent, some binding was observed. This was caused by the wear of the detent plunger against the steep helical cam surface in the operating lever. To completely eliminate this wear, the cam surface (figure 16) was changed to a right angle "Z" shaped guide slot. The probe then had to be manually pushed in or pulled out, instead of being forced into position by the cam slot. (See figures 16 and 17 of the flight hardware for the final configuration of the knob.) An additional feature of this design is that at the start and finish of the probe motion, there is in effect, a length of dead band before the probe is actually moved. This dead band serves to prevent accidental probe motion should the knob inadvertently receive a sharp blow that might force

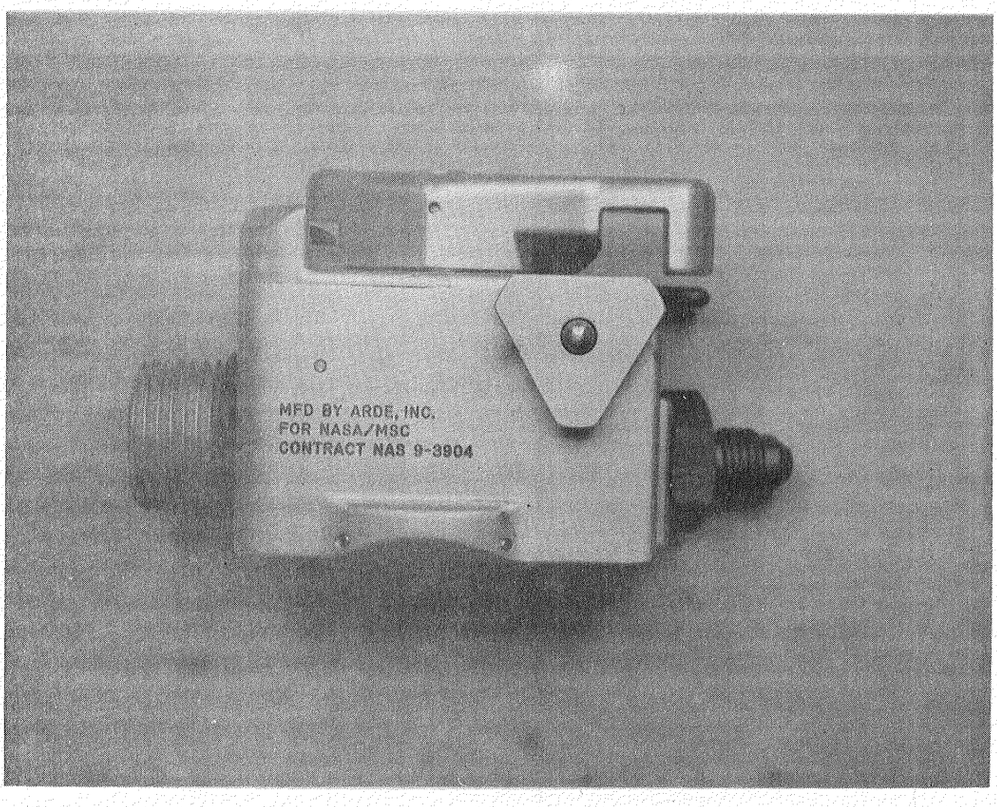

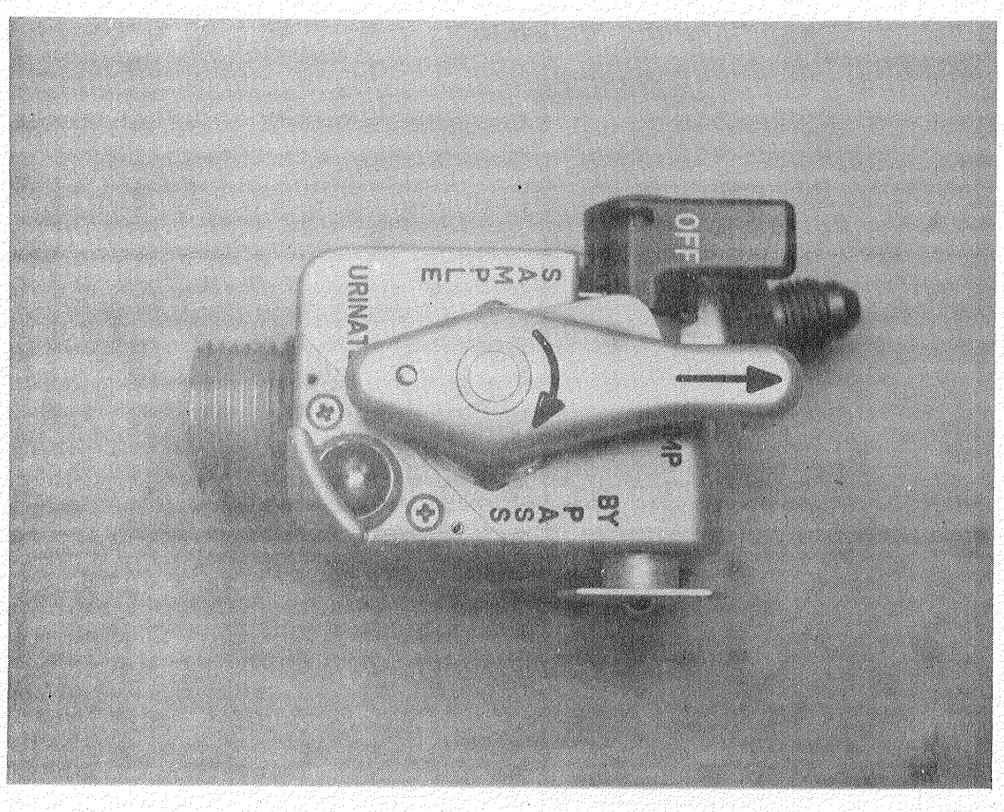

SAMPLE PROBE - CAM LEVER CONFIGURATION

FIGURE 16

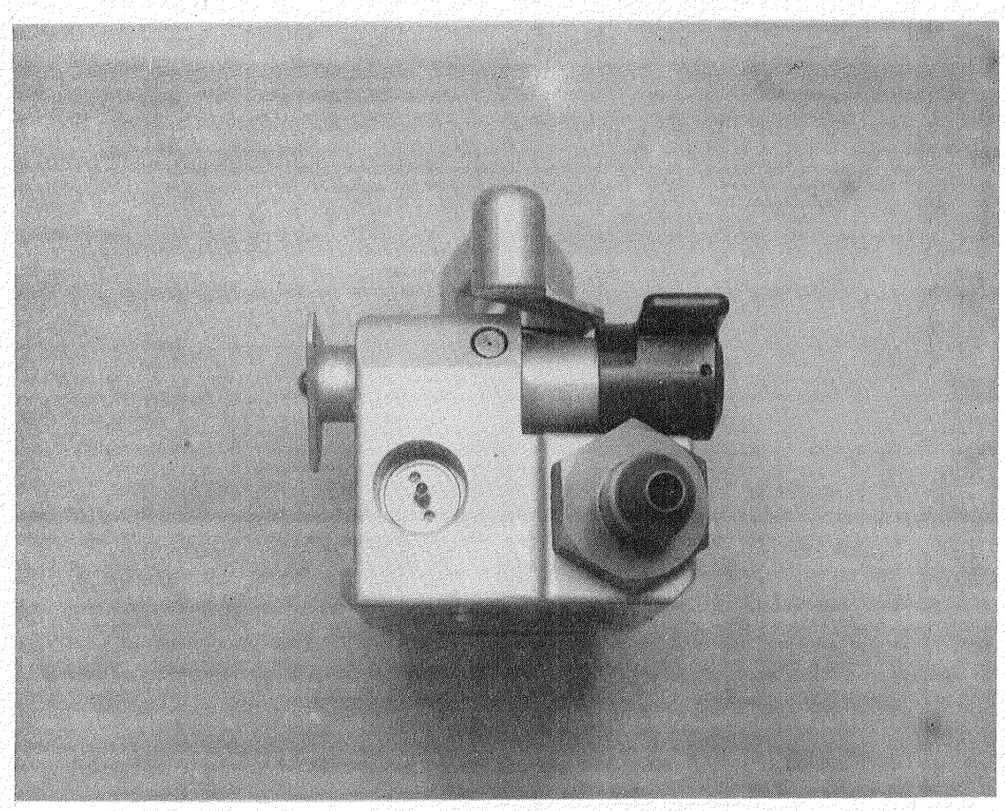

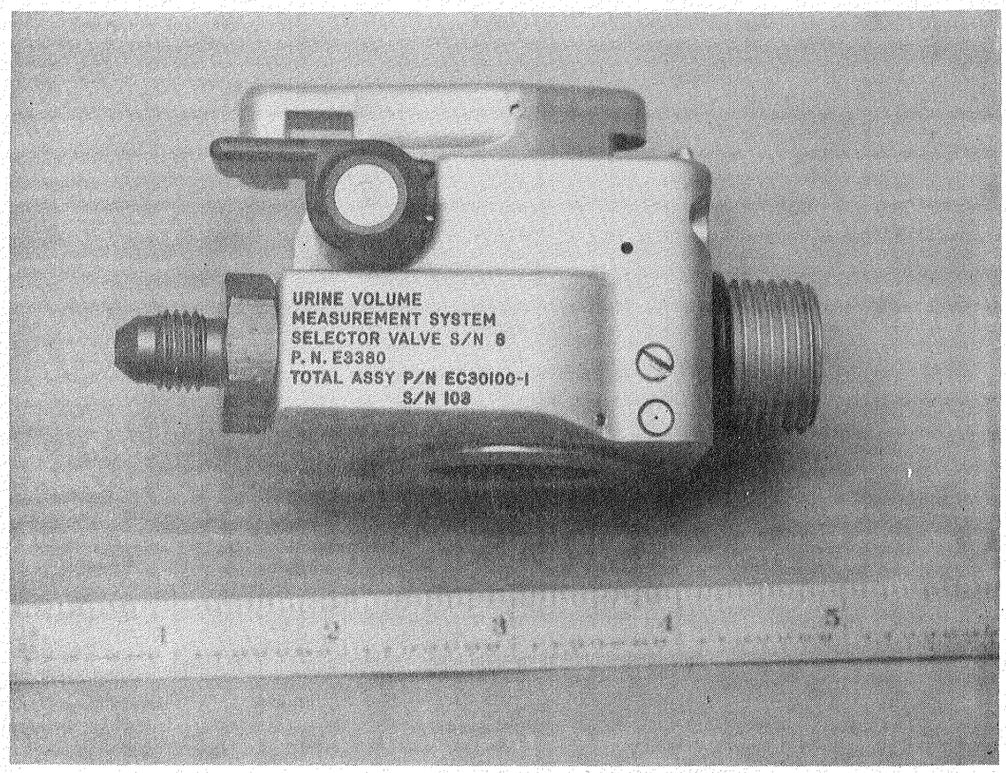

SAMPLE PROBE - CAM LEVER CONFIGURATION

FIGURE 17

the operating lever out of the detent. In the initial design, the probe would start to move the moment the mechanism was out of the detent.

b. As previously mentioned in section 3.1.5, paragraph d, the probe diameter was increased from 1/8" dia. to 3/16" dia. to permit a larger flow passage. When this was tested, it was found that because of the snug fit of the sample bag on the connector, and the subsequent movement of the sample bag seal, the side exit ports of the sampling probe were obstructed by the seal material, thereby causing a flow restriction. The addition of an axial hole solved the problem of slow sample bag filling. With only very moderate pressure on the collection/mixing bag, transfer of 100 ml of sample takes an average of 22 seconds. While the axial hole did permit full flow, there was some concern that there could be some urine drop leakage from the probe tip, particularly since the probe tip was well inside the valve body in the retracted position, leaving a clearance space.

Because of this concern regarding possible leakage, the probe was changed to bring the tip up to the opening in the valve body when

in the retracted position. At the same time the design reverted back to side holes only, and the side holes (1/8" dia.) were moved closer to the tip of the probe to fully clear the seal of the sample bag when in the extended position. Again this arrangement met the design criteria, but during pre-installation tests at Cape Kennedy (on the flight system), it was found that the sample probe outlet ports were removing particles of silicone rubber from the GFE sample bag seals during withdrawal from the seal. The ARDE probe design, although conforming to the configuration used in previous Urine Transport Systems hardware, was apparently not compatible with the changed silicone rubber used in later supplied sample bag seals. To overcome the shearing of particles from the seal, the probe tip was immediately changed from two (2) 1/8" dia. side holes to eight (8) .043" dia. holes with a small 5° taper at the tip. By making the holes smaller, the rubber of the seal was prevented from bulging into the probe tip openings and being sheared or pinched while the probe tip was retracted. There was no restriction of flow, since the holes were now completely clear of the seal, and flow measurements showed that only 11 to 15 seconds were necessary to take a 100 ml sample. The final probe design can be seen

in the pictures of the flight hardware in figures 11, 12 and 13.

c. The attaching flange of the sample bag was slightly modified from the original Gemini UTS hardware by adding a bevel all around the edges. This was provided to reduce the attachment force required to secure the sample bag. This force was found to be excessively great with the GFE sample bags supplied to ARDE for test purposes.

3.3.1.3 Selector Valve Handle and Detent

The desirability of a positive detent in the selector valve handle was recognized early in the design stage, and accordingly, a Vlier screw (screw body with integral internal spring loaded plunger) was designed into the handle. The plunger of the Vlier screw was to ride across the top of the valve body as the handle was rotated, and then match a machined depression in the valve body at the appropriate detent location. It was also felt that the detent depression should be shaped so as to allow only unidirectional motion. However, this concept was discarded after trial in prototype No. 1, since a situation might arise where it would be desirable to reverse the handle direction in the event of binding or seizure.

Another immediate modification was a slight change in the ramp angle and length dimensions on the underside of the selector valve handle to provide more positive location of the handle on the piston override button to positively insure full depression of the metering piston.

During cycling of the valve, the handle detent was found to be unsatisfactory because of excessive wear on the valve top surface and unreliable detent action. Attempts were made to substitute different loading springs to correct these problems but without any success. A redesign was instituted within the limits of available space to eliminate the small Vlier plunger and substitute a larger and more reliable locating mechanism.

Numerous arrangements of balls, plungers, and springs were tried until the detent configuration was changed to a plunger designed to ride in the handle, with a 3/16" dia. hemispherical lower end. The use of a 3/16" diameter ball backed up by a spring, was found to be unreliable, causing binding of the handle after a limited number of cycles. A 1/8" ball design was discarded because of the probability of insufficiently firm feeling detent action, and because the ball would be riding on its diameter in the detented position; also resulting in the possibility of binding action when starting rotation of the handle to the next position.

Different detent depression shapes (in the valve body) were also tried, such as spherical and conical seats with and without entrance and exit ramps. The optimum solution with the 3/16" dia. plunger was a conical seat, .070 inches deep with 90° included angle. These factors provided a smooth and positive detent, and held wear to a minimum. An additional feature was obtained by adjusting the length of the plunger stem, so that it protrudes through a hole in the handle when the handle is between detents, and will appear flush with the handle in the detent position. In this manner, the crewman can either see or feel when the handle is not in its exact detented position. The detail parts of the handle can be seen in the photographs in figures 16 and 17.

The design of the handle further developed when, in the course of operability tests of a flight type CUVMS, it was recommended that the handle be made larger to improve operability and "feel" in moving the handle over the metering pump into the "Urinate" position. The force required to move the handle over the metering pump was great enough to cause occasional overriding of the handle past the "Urinate" detent position. A larger, longer handle was promptly fabricated to improve ease of operation. This larger handle also had the detent relocated, such that the detent was now on the opposite side of the turning axis from the metering pump, thereby balancing the moment. Previously, the detent spring force and the metering pump

spring force combined to create an overturning moment on the handle which caused some handle play. An arrow was engraved on the handle to add another visual reference mark. This final design handle can be seen in figure 17 of the flight type hardware. A final recommendation to completely eliminate wear on the top surface of the valve body due to the detent, was to install a hardened wear plate; however, program commitments to have a flight system ready for the GT-6 flight, did not allow time for the change to be incorporated. Satisfactory handle and detent operation of the configuration shown was amply demonstrated with well over 1000 cycles without any deleterious effect during the qualification tests.

3.3.1.4 Selector Valve Internal Design and Flow Testing

One of the prime requirements for "man-rated" safe and reliable actual mission use of the CUVMS was that the selector valve passages be sized to adequately handle conditions of full flow. The first valves were designed with 1/4" dia. passages, which calculations showed would adequately accommodate the maximum expected flow rate and provide a system envelope which would fit within the very tight space limitations. As soon as the first prototype was built, a completely assembled Urine Volume Measurement System was tested with human subjects, and under controlled pressure and flow conditions. (See figure 18 for the flow test setup used for quantitative system evaluation.)

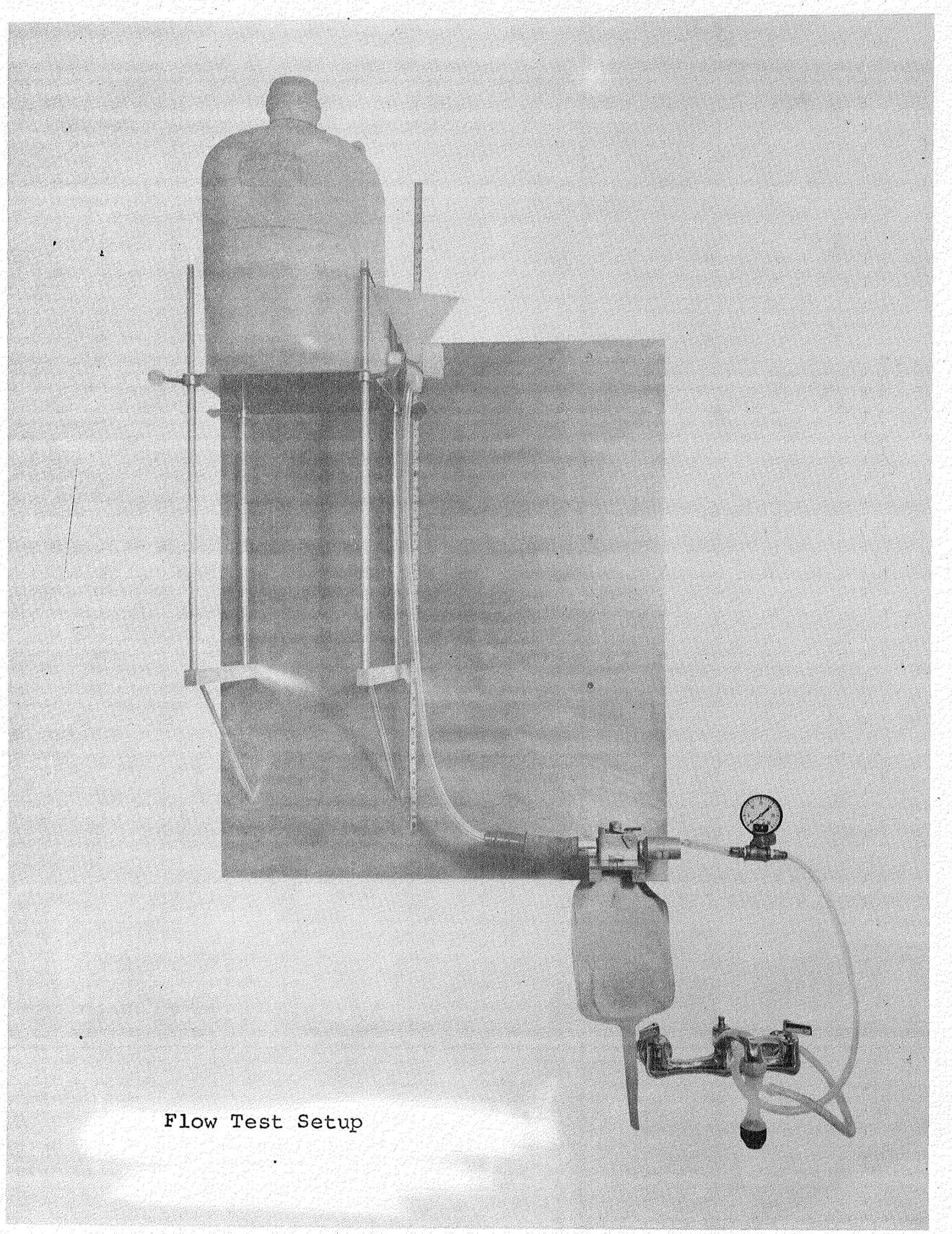

Flow Test Setup

FIGURE 16

After the first human use of the system, it was obvious that ARDE modification of the GFE urine receiver was necessary to enable the use of this component alone without encountering back leakage, even when the penis seal was inflated to the point where urination was slightly restricted and somewhat uncomfortable. After modification, the system was used by several men to evaluate ease and convenience of operation, and to perform all the CUVMS functions. Details of the urine receiver modification effort are described in section 3.3.5, paragraph 4.

In the selector valve "Urinate" position, resistance to flow was encountered, which caused a slight back leakage from the urine receiver during micturition. When the selector valve was placed in the "Dump" position, resistance to flow was encountered in expelling the urine from the collection/mixing bag through the outlet port. This indicated that there was a restriction in the selector valve connection to the collection/mixing bag where it penetrates the collection/mixing bag seal. Corrective action was taken as described in the discussion of the collection/mixing bag (Section 3.3.2).

In the "By-Pass" position, no difficulty was encountered, and in several tests made under conditions of urgent urination, no back leakage from the urine receiver was encountered, and no apparent resistance to flow through the selector valve was encountered.

Subsequent to the above tests, the CUVMS, with urine receiver attached, was installed in the flow test fixture. With a water head of 36 inches in all tests (which is equivalent to the maximum expected micturition pressure), flow measurements were made in each of the selector valve operating positions. The 36 inch head was maintained by the use of a large polyethylene bottle supported above the CUVMS and connected to the CUVMS through tygon tubing, and an artificial penis fabricated by ARDE. The initial prototype system data are reported below.

	System Components	Flow Rate
1)	Artificial penis only	44.1 ml/sec.
2)	Artificial penis plus urine receiver only	42.4 ml/sec.
3)	Penis plus urine receiver plus selector valve in "Urinate" position, no collection/mixing bag attached	41.1 ml/sec.
4)	Penis plus urine receiver with collection/mixing bag attached	20.8 ml/sec.
5)	Penis plus urine receiver with selector valve in "By-Pass" position, 5/16" I.D. tubing on selector valve outlet	38.4 ml/sec.

It may be noted that while the urine receiver functioned sufficiently well to obtain needed data under the conditions mentioned above, back leakage from the receiver

could not be eliminated in the flow rate fixture tests. This was probably due to the 36 inch head, which is approximately the highest bladder pressure reported in medical reports which were investigated. Under severe straining conditions, bladder pressures of 100 cm of water (approximately 40 inches of water head) have occasionally been encountered. For a discussion of the urine receiver design see section 3.3.5, paragraph 4.

The above indicated that flows through the CUVMS should be satisfactory except for operation in the collection mode. However, because of the great emphasis placed on crew comfort and safety, it was felt that a greater margin of safety should be incorporated. Therefore, a review of the selector valve design was initiated to determine if the flow passages utilized in the "Urinate" mode could be increased in area to the equivalent of a 3/8" diameter hole.

In response to this new requirement, it was determined that to achieve the equivalent of a 3/8" dia. opening, the existing passages of the selector valve body and plug would have to be reworked into an oblong shape. In this way sufficient material between adjacent passages would exist to reliably prevent internal leakage under maximum test pressures. As an intermediate approach for testing one prototype unit, the most direct method for enlarging the flow passages would be to simply drill out the passages from 1/4" dia. to

5/16" diameter. Consequently, prototype S/N 1 was immediately modified while the oblong slot was scheduled for the flight hardware.

The modified prototype system (5/16" dia. passages) was tested with a human subject; and, with a volume of 320 ml, no detectable resistance to flow was observed during micturition through the system. 600 ml of water passed through the system with an initial head of 36 inches of water, and took 16 seconds to completely flow into the collection/mixing bag. This compares with approximately 20 seconds prior to the opening of the urinate flow passages.

3.3.2 Collection/Mixing Bag

After the first prototype collection/mixing bags were fabricated (see figure 10), preliminary flow tests showed that the bag seal restricted the flow into the bag during the "Urinate" operating mode. The urinate outlet tube of the selector valve was designed with side ports which were partially obstructed by the collection/mixing bag seal. The outlet tube was then changed to use a "straight through port" (see taper plug in figures 8 and 9), and the flow rate increased from 20.8 ml/sec. to 37.8 ml/sec. under the standardized head of 36 inches of water. When the collection/mixing

bag neck was held open during a subsequent flow test, the flow rate into the collection/mixing bag increased to 40.6 ml/sec. This compares favorably with the 42.4 ml/sec. for the flow through a wide open urine receiver without the valve.

Excess urine drainage tests indicated the necessity of a separation device in the collection/mixing bag to prevent premature collapse during the "dump" operation. Extensive tests were performed with many materials and configurations inserted into the bag. The draining time for 600 ml of water from the collection/mixing bag (to the UTS overboard drain line) and the residual liquid remaining in the bag were both monitored. A one-inch strip of Trilock fabric was inserted in the bag and the drainage time was reduced from 93 seconds to 43 seconds. However, the residual liquid increased from 2 ml to 25 ml. This large residue, due to the holdup in the open space of the Trilock, was unacceptable for accurate volume measurement. A reduction in width of the insert to 0.5 inches resulted in fabric shredding, which made its use impractical.

The use of nylon monofilament of various diameters, nylon mesh screening, and round viton extruded rod were tried, but none were satisfactory. Another approach which was then tried, was to insert a longitudinally slit tube of polyvinyl chloride into the bottom of the bag, with a length providing a curvature so that the tube was about half-way to the side of the bag at its center. This method provided consistent and reliable emptying of the bag under a differential

pressure of only 2 psi. Using 600 ml of water, the emptying time was approximately 33 seconds, leaving a residual of 3 ml or less in the collection/mixing bag. Since PVC did not have the necessary temperature characteristics for the qualification tests, the same approach was tried with fiberglass tubing and silicone rubber impregnated fiberglass tubing. The former did not work, but the latter provided full drainage of 600 ml (to 2 ml or less) in under 30 seconds with the collection/mixing bag hanging straight down, thus working against 1 g conditions. This solution was to be implemented into the flight components and a number of bags for flight use were fabricated (see figure 10).

In addition to a tubing insert, another modification found desirable as a result of prototype system testing, was the reinforcement of the neoprene neck molding which is held by the crewman while attaching and removing the bag from the selector valve. The function of the reinforcement was to enable an easier grasp of the bag neck with a gloved hand. In addition, less strain on the material would enhance the bag's reliability.

Further prototype system testing and evaluation by ARDE and NASA resulted in additional changes and improvements in the bag design. The desire to have available an external urine flow by-pass accessory for the CUVMS lead to the consideration of a screw type bag fitting to replace the triangular bayonet twist connector. The intended mode of use in the event of a valve malfunction was to attach the urine receiver

to the bag and urinate directly into the collection/mixing bag without using the valve. Then the bag contents could be voided through a threaded fitting attached to the overboard dump line. Added benefits of this approach were the elimination of the serum-bottle type seal in the collection/mixing bag with the substitution of an "O" ring face seal, plus increased ease of fabrication of the bag. Having the connection fitting installed on the top edge of the bag through the seam introduced manufacturing difficulties and detracted from the bag strength. Though ARDE designed the new flight configuration collection/mixing bag, NASA undertook the responsibility of fabrication of the final flight component. The side entry port configuration can be seen in the photograph in figure 19 and assembly drawing E 3387.

The side entry port permitted the bag to wrap conveniently around the valve with little or no stress on the fabric thereby making a neater package for handling, shipping, or stowage in the spacecraft.

Tests were then initiated with a new screw-type side opening collection/mixing bag furnished by NASA/MSC for calibration and test of the CUVMS flight hardware. Tests were also performed to determine if this new flight configuration had any effect on volume measurement accuracy due to changed quantity or reproducibility of holdup of urine in the bag after the dump operation is performed. These tests showed that the residue in this screw-type, side opening bag was considerably higher (7.3 to 10 ml) than in the original flight configuration (1 to 2 ml) when the bag was emptied under

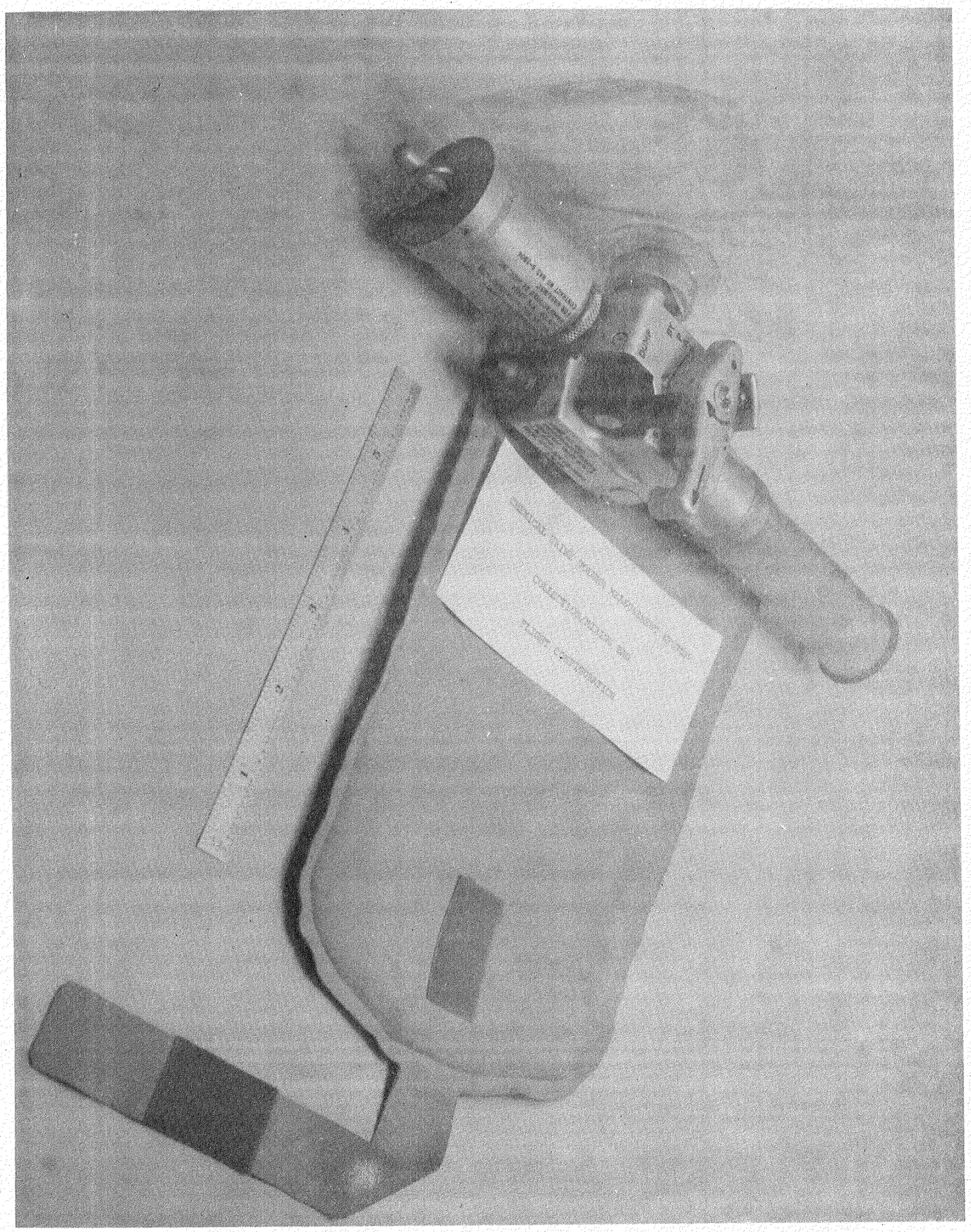

FIGURE 19

REVISIONS					
E.O. NO.	SYM	ZONE	DESCRIPTION	DATE	APPROVED
	G		REVISED & REDESIGNED	10-18-66 J.M.	A.S.

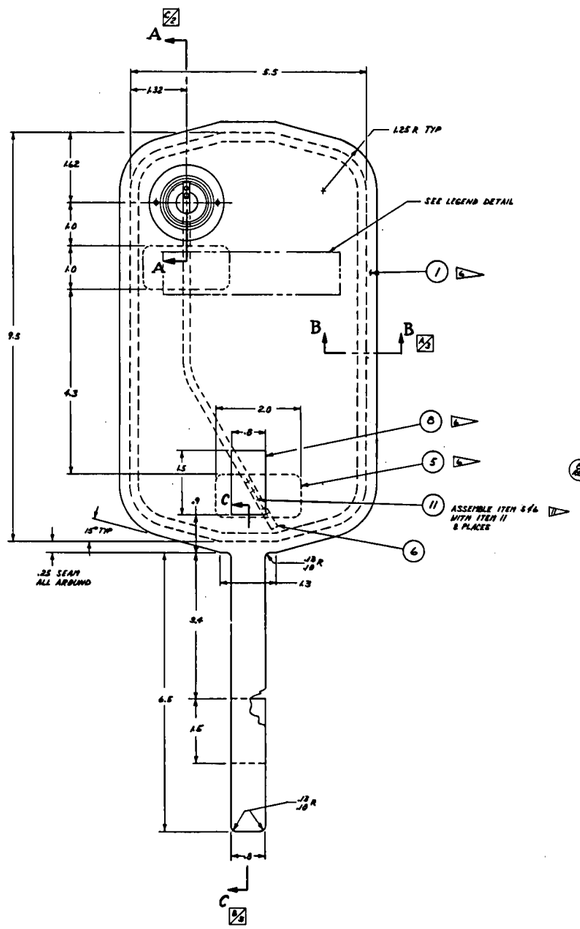

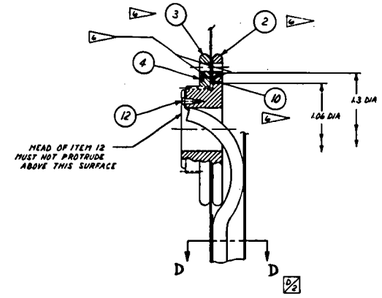

SECTION A-A
SCALE 2:1

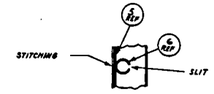

SECTION D-D
SCALE 2:1

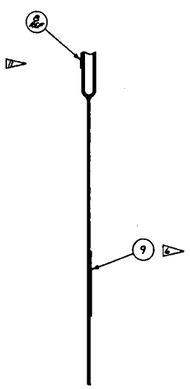

SECTION C-C

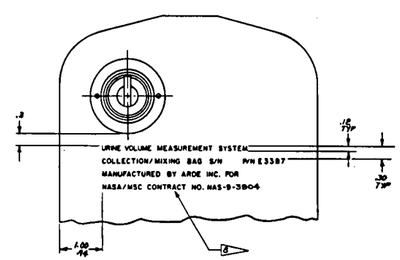

LEGEND DETAIL

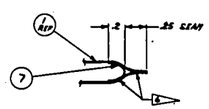

SECTION B-B
SCALE 2:1

NOTES:

1. SPANISH YELLOW OR MOLTEN ORANGE COLORED NEOPRENE COATED NYLON TWILL .020± THICK PER MIL-C-19032.
2. VELCRO CORP. 681 FIFTH AVE, NEW YORK, N.Y. 10022 VELCRO PILE (NAPPED), ORANGE COLOR.
3. VELCRO CORP. 681 FIFTH AVE, NEW YORK, N.Y. 10022 VELCRO HOOK #66 ORANGE COLOR.
4. BOSTIK, B.B. CHEM. DIV. OF UNITED SHOE MACHINERY CORP. CAMBRIDGE, MASS. METAL PRIMER #1007-A.
5. UBS CHEMICAL CO, CAMBRIDGE, MASS. N 136 & AND A, UBS GRIP PER MIL-C-5540A TYPES I & III MIX THOROUGHLY 1 PART N 136 A (ACCELERATOR) TO 32 PARTS N136 B (ADHESIVE). POT LIFE 8 HOURS.
6. APPLICATION OF ITEM 14:
   a) APPLY PRIMER (ITEM 13) TO CONTACTING SURFACES OF ITEMS 2 & 3 AT CONTACT INTERFACE WITH ITEMS 1 & 10 AND LET DRY FOR 20-30 MINUTES.
   b) APPLY ITEM 14 TO CONTACTING SURFACES OF ITEMS: 1 & 7, 1 & 5, 1 & 10, 1 & 9, 1 & 9 AND ALLOW TO DRY FOR 20 TO 30 MINUTES.
   c) APPLY STEP b) TWO TIMES TO RUBBER COATED SURFACES & THREE TIMES TO FABRIC (POROUS) SURFACES.
   d) JOIN SURFACES & CURE AT ROOM TEMP. FOR 24 HRS MIN.
7. THE BANNER STAMP & SEAL CO., ST. LOUIS 2, MO. INK, RUBBER STAMP #1966 BLACK.
8. RUBBER STAMP OR STENCIL LEGEND WITH ITEM 15 AS SHOWN.
9. NO AIR LEAKS PERMISSIBLE AT 5 PSIG
10. WHEN ATTACHED TO SELECTOR VALVE LONGITUDINAL AXIS OF BAG MUST BE POSITIONED 90° ±5° TO LONGITUDINAL AXIS OF VALVE.
11. STITCHING - 6 TO 8 STITCHES PER INCH.

QTY REQD PER DASH NO.				ITEM NO.	CODE IDENT	PART OR IDENTIFYING NO.	NOMENCLATURE OR DESCRIPTION	MATERIAL	SPECIFICATION
			AR	15		E3387-15	INK	11	11
			AR	14		E3387-14	ADHESIVE	10	10 2
			AR	13		E3387-13	PRIMER-METAL	10	10 2
			1	12		E3387-12	SCREW-DRIVE-RD HD	18-8 S.S.	SIMILAR TO AN525-00-2
			AR	11		E3387-11	THREAD-SIZE E	NYLON	MIL-T-7807B
			1	10		E3387-10	DOUBLE RING	1	1
			1	9		E3387-9	CLOSURE-HOOK PORTION	3	3
			1	8		E3387-8	CLOSURE-PILE PORTION	3	3
			1	7		E3387-7	REINFORCING STRIP	1	1
			1	6		B104-180	TUBING		
			2	5		E3387-5	HOLD DOWN TAPE	1	1
			1	4		MS15303-024	"D" RING		
			1	3		C104211	NUT, ADAPTER		
			1	2		C104210	ADAPTER		
			2	1		E3387-1	BAG, BODY HALF	1	1
						E3387	ASSEMBLY BAG COLLECTING		

LIST OF MATERIAL OR PARTS LIST

UNLESS OTHERWISE SPECIFIED			
DIMENSIONS ARE IN INCHES	DRAWN BY	J.M.	10-18-66
TOLERANCES	CHECKER	JL	11-8-66
X = ±.005, .XX = ±.010, .XXX = ±.005 ANGULARITY ±1°	STRESS ENG'R		
BREAK SHARP EDGES .005-.010	AERO THERMO		
ALL SMALL FILLETS .005-.0005	DES. ENG'R	J.S.	10-14-66
THREADS PER FED. HANDBK H-28 AND MIL-STD-8	PROJ. ENG'R		
DIMENSIONS PER MIL-STD-8			
HOLD SYMBOLS PER JAN-STD-15			
PACKAGE DIMENSIONS SYMBOLS PER MIL-STD-30			
ALL FINISHED SURFACES 125			
NEXT ASSEMBLY	CONTRACT NAS 9-3904		

ARDE, INC.
PASADENA, N.J.

TITLE P/O URINE VOLUME MEASUREMENT SYSTEM - ASSEMBLY, BAG COLLECTION/MIXING

CODE IDENT NO 05980 | SIZE E | E3387

SCALE 1/1 | SHEET

E3387

standardized conditions of 2 psi vacuum differential and 40 seconds drainage time. At 80 seconds and 5 psi differential, the residue was reduced to less than 2 ml. The higher residue would cause problems in volume measurement accuracy, particularly if it is not reproducible for each cycle of use, and long emptying times to reduce holdup in the bag were not desirable.

Further experimentation was performed with numerous types of tube inserts in the new side port collection/mixing bags. Some of the materials used were similar to the earlier tests, but many new materials and arrangements were tried. See the data of Appendix D for a summary of the test procedure and data for these drainage tests. During the test period some advantage was indicated by the introduction of radial slots into the back face of the flange nut of the screw connector inside the collection/mixing bag. This modification was described to NASA for possible use in flight bags to be fabricated at NASA/MSC. The best results were obtained from the use of a roll-up technique for the collection/mixing bag during the last 20 seconds of the dump period. This technique consistently reduced the residue in the bag to an amount comparable with the low residues obtained with the original top opening collection/mixing bag. This technique was recommended to NASA/MSC/CSD for use in the Gemini missions.

It was learned by ARDE that two different collection/mixing bags were used in space simulator tests at WPAFB. One had the standard 800 ml capacity, and the other was a 1200 ml

bag. It was strongly felt by ARDE that the use of a 1200 ml collection/mixing bag would reduce the accuracy of volume measurement, due to necessarily increased urine residue after the dumping operation. The actual effects on the accuracy can not, however, be determined until final results are available with this component. If the collection/mixing bag is adequately drained to reduce total residue below 4 ml, then the larger bag should be satisfactory, and this condition is likely to exist if the drainage vacuum differential approaches the maximum of 5 psi available during the actual mission. Subsequently it was determined that a 1200 ml bag was used during the 2-week GT-7 mission. However, at the time of this report, the results from that mission have not been evaluated. Based on the Pre-Delivery Acceptance Tests and Pre-Installation Acceptance Tests performed on the flight hardware at ARDE and Cape Kennedy, it is expected that the actual mission results will fall within the accuracy requirements for the program objectives.

3.3.3 Tracer Storage Accumulator

Concurrent with the fabrication of the system mock-ups, detail configuration of the proposed design of the tracer storage accumulator was being closely scrutinized. The initial concept was to have an inflatable elastomer bladder protected by a metal shroud. The bladder would be filled under pressure through a Schrader valve (tire type), and the natural elasticity of the bladder material would provide a continuous pressure to maintain flow of the tracer fluid. The success of this concept relied heavily on finding

a suitable elastomer that would be compatible with the tracer solution, remain stable during exposure to temperature extremes, and provide the necessary characteristics of sufficient elongation, very low tension set, minimum relaxation under load, and be suitable for use in a manned spacecraft.

Because the number of materials used in preparing rubber compounds is large, e.g., accelerators, anti-oxidants, plasticizers, fillers, extenders, etc., many formulations are treated as proprietary items by the manufacturer. While the base material of the elastomer could be identified, the specific ingredients could not. Therefore, the choice of materials was narrowed to only those that could be considered acceptable for the use and test environments to be encountered.

Screening and testing of elastomer candidates for the tracer storage accumulator bladder was done on a semi-quantitative basis at room temperature. Various sizes of available tubing were obtained with differing inside diameters and wall thicknesses. The properties sought were the high elongation and low tensile set, as well as the necessary compatibility with the tracer solution. If tensile set characteristics were unavailable, compression set was used as an index of expected material performance.

Each test specimen was attached to a pressurized water source. The end of the tube was clamped tight, while the pressure (approximately 20 psig) was introduced through a

tee fitting that had one leg attached to a pressure gauge. The inlet leg from the pressure source was then valved shut. With each specimen sealed off, the pressure was observed to drop due to creep or relaxation of the material while under stress. The rate of pressure decay was noted. After the test, all samples were measured dimensionally to determine the amount of tension set that occurred. The experimental materials evaluated were Buna-N, Butyl, Neoprene, Viton, and silicone rubber.

Because of material deficiencies in tension set and creep under stress, it was determined that an elastic bladder could not be made which would consistently and reliably achieve proper expulsion pressures needed to overcome check valve loads, and maintain necessary tracer solution pressure over a sufficient period of time.

Alternative back-up design effort was then immediately instituted to overcome the material problems presented by the bladder design.

3.3.3.1 Alternative Tracer Storage Accumulator Designs

To exhaust all possibilities that could yield a satisfactory solution, three different type accumulators were designed and built for evaluation. Since the program schedule was such that the accumulators would still be under development during Phase III of the program (Prototype design, fabrication, and test), it was important that each

configuration would identically mount to the valve. Therefore, when a final choice was made, the accumulator could readily attach to the valve for system test. Two units were to be pressurized gas operated or spring loaded piston accumulators, and the third, spring loaded with a Bellofram seal.

A. Gas Operated Accumulator

This device was the first unit completed for testing (see figure 20). It contained a sliding piston with an "O" ring seal which separated the tracer fluid from the gas chamber. The unit was designed to operate over a range of 5 to 15 psig using an inert gas such as dry nitrogen for pressurizing. A Shrader valve was used to pressurize the component and retain the gas. Test results demonstrated that becuase of the UTS space limitation requiring a small size component, the available gas volume in the fully charged condition was too small for reliable discharge of the minimum required liquid volume. To compensate for the small volume by increasing charging pressure, the initial gas charging pressures were required to be excessively high in order to provide an adequate final delivery pressure when the piston reached the end of its travel. Measurement of the actual pressure inside the gas space was extremely difficult because of the additional volume introduced by the gauge itself and the necessary connecting

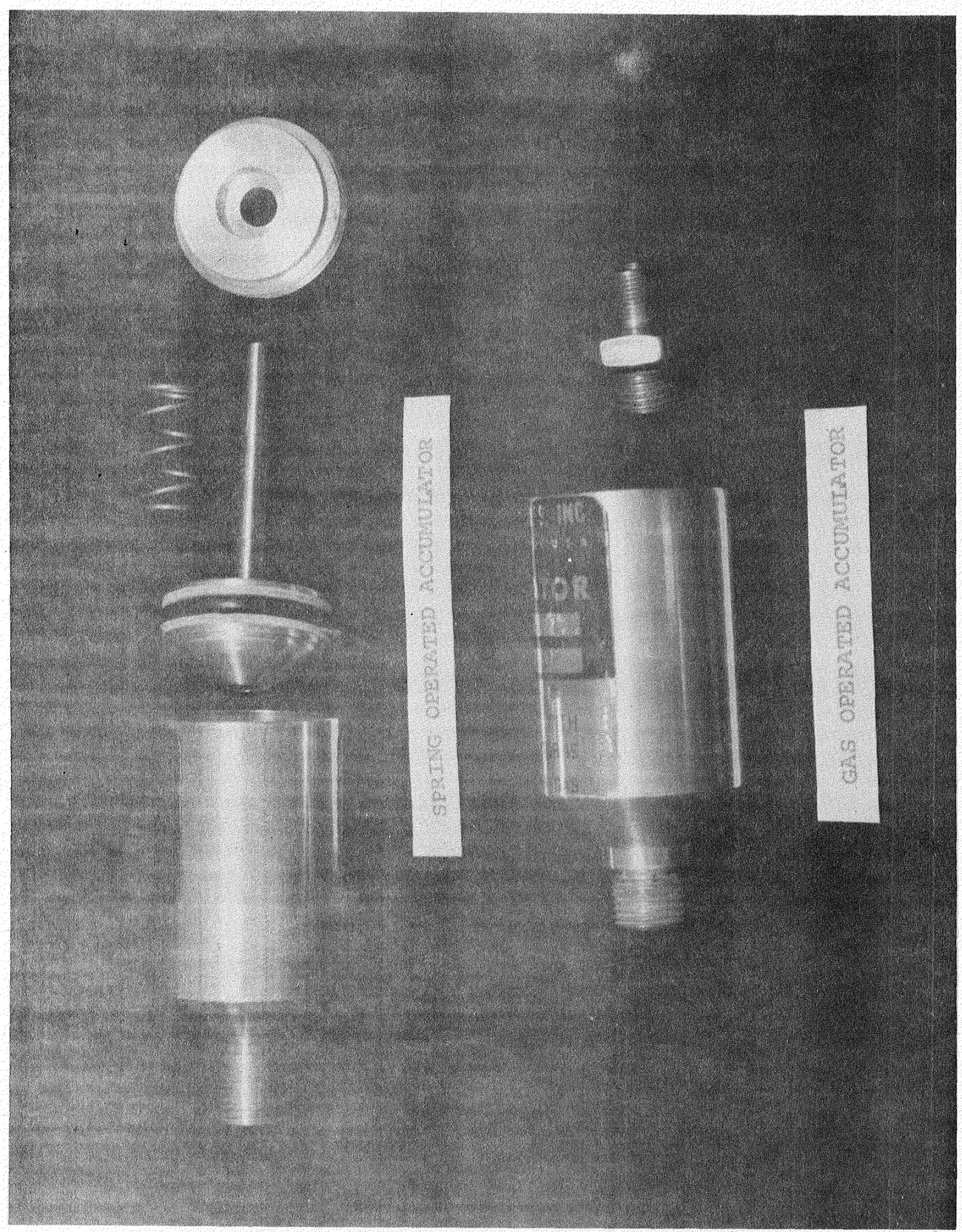

FIGURE 20

tubing. It was determined that the minimum pressure required to overcome stiction and actuate the piston was 3 psig, which was acceptable, but a charging pressure as high as 60 psig did not provide adequate tracer delivery volume because of the small gas space available.

The fluid volume delivered, friction level of the piston, and fluid seal were tested at various pressure levels. Based on the results, it was decided that while the method was feasible, as a practical solution, the spring operated units being simultaneously developed and tested, showed more promise, and this approach was discarded.

B. Spring Operated Accumulator

This design, while using a similar piston as the gas unit, had one major functional improvement - the capability of restraining the piston until time for actual tracer delivery. This resulted in providing unpressurized storage of the tracer prior to use, and relieved the seals during long term storage. Figure 20 shows the detail parts. The unit was designed to permit variation of delivery pressure by the substitution of drive springs of different configurations and spring constants. Tests were run to enable comparison of parameters with those of the gas operated accumulators. Though the problem of maintaining adequate pressure

over the range of piston operation was eliminated, potential sources of trouble with seals and repeatable frictional forces still existed, and final emphasis was placed on the satisfactory development of the Bellofram accumulator design.

C. Bellofram Accumulator

Because of the design limitations of the methods previously discussed, a Bellofram, driven by a spring actuated piston, offered the best solution to the problems encountered and design objectives. A detailed cross-section is shown in drawing D 3379.

The Bellofram, which is a rolling diaphragm made by the Bellofram Corporation, possesses the characteristic of a smooth, continuous, inherently frictionless motion, due to its rolling action. Therefore, the actuation loads required are very low and predictable. In addition, increased reliability results from the replacement of the dynamic "O" ring seals of the piston version with the static seal of the Bellofram. In the storage mode, the piston is restrained from pressurizing the system by use of a lock pin through the piston shaft.

Several different materials were carefully analyzed before selection of the final Bellofram material.

Since Buna-N was readily available as an "off-the-shelf" item, it was used for prototype testing and proving the concept. The final material chosen was silicone rubber with slightly superior properties when exposed to the thermal, chemical, and mechanical environments to be encountered.

As soon as the first prototype Bellofram tracer storage accumulator had been shown to provide a satisfactory answer to the basic design and operational requirements, a more vigorous testing program was commenced, which resulted in some minor modifications to insure reliability for the final flight hardware.

The unit was subjected to a fifty per cent overpressure which caused some slight leakage from the front end seal which is penetrated during attachment to the selector valve. A re-design was implemented, changing the seal from a two-piece Viton molding to a two-layer silicone rubber (Dow Corning No. 9711) disc. This provided zero leakage even after being pierced more than 25 times during charging and discharging of the accumulator.

The tracer storage accumulator was filled and pressurized to full capacity and left in this condition for 96 hours. During this period there was no leakage. Since the design is such that a removable lock pin is provided to insure that the

accumulator contents will be unpressurized until actual use, extremely high tracer storage reliability was apparent.

A fully charged tracer storage accumulator was subjected to a temperature of 210°F for four (4) hours. No leakage was observed from the front seal or Bellofram seal. The component was then tested for tracer delivery with a selector valve, and functioned normally, delivering the full charge by rotation of the selector valve handle to operate the tracer metering mechanism. This test condition was more severe than that specified in the Qualification Test Plan and indicated that the design was satisfactory. This prototype accumulator utilized a Bellofram of Dacron fabric impregnated with Buna-N elastomer. As mentioned previously, the flight units were to incorporate silicone rubber impregnated Belloframs to provide even better temperature characteristics and insure full compatibility between the tracer solution and the elastomer. One week immersion tests at 210°F in the propylene glycol-water tracer liquid had shown that the silicone rubber Bellofram material was slightly more stable than Buna-N, as indicated by the absence of any color imparted to the test solution, as against a slight yellowing with the Buna-N.

The tracer volume delivered from the fully charged condition to the final discharge position of the driving piston was 19.5 ml. The tracer delivery capacity was increased to 20.2 ml by modifying some internal part dimensions. This provided a total of 67 tracer injections with an excess capacity of 19.6% over the minimum of 56 required per accumulator. For quick recognition of fully charged and unused accumulators, it was decided to install a pierceable shield over the tracer accumulator outlet. This consists of a 3 mil thick aluminum foil disc with a heat sensitized adhesive backing.

During the course of various tests conducted with the CUVMS, it was noted that the accumulator front end seal developed a compression set with time. After an interval of several days, while the accumulator was attached to the selector valve with the needle of the upstream check valve piercing the seal, removal of the accumulator from the selector valve resulted in some leakage from the seal. Inasmuch as a design goal was to consider the accumulator attached for up to five days, and then replaced with a fully charged unit, a rigorous review of the seal material was commenced.

Dow Corning No. 9711 silicone was originally selected primarily on the basis of its having been previously used in early Gemini hardware as a

seal material in the sample bags, and also its satisfactory performance in the relatively short term tests previously conducted. A search for a new material hinged on the characteristics of low compression set from 0°F to 200°F, compatibility of the material with a tracer solution of 50% propylene glycol-50% water, and maintainability of seal integrity for at least seven days, and preferably longer than two weeks. A series of elastomers were tried, such as Buna-N, Viton, Neoprene, silicone (3 types), Ethylene-Propylene Terpolymer, and natural rubber (the last for comparative purposes only). Qualitative comparisons of their properties were made. Within the form factor allowed by the existing component design, these materials were used in different thickness combinations and durometers. See Appendix E for a detailed description of the test methods and results. The final decision was simply to replace the existing material with a new type without any mechanical changes. The choice was a silicone rubber per MIL-R-5847D, Class II, Grade 40, which was far superior to the No. 9711 in its compression set properties. According to ASTM Standards, the MIL type silicone is rated between 25-35% compression set after 70 hours at 302°F as compared to 100% for No. 9711 after 22 hours at 300°F. Though the test temperatures are far in excess of the required environment, the specification properties

of the materials at these high temperatures are indicative of their behavior, as born out by the tests at ARDE.

The silicone rubber Bellofram accumulators used on the first Gemini M-5A flight experiment (GT-7) showed a considerable loss in radioactivity concentration. After a lengthy test program (NAS 9-6124, item 9), it was observed that silicone rubber permitted the loss of radioactive materials in solution whereas the Buna-N elastomer Bellofram did not exhibit this effect. Hence, all subsequently used Bellofram accumulators were of the Buna-N type.

3.3.4 SYSTEM WEIGHT

The component weights of the final flight CUVMS are as follows:

Selector Valve	298 gms	(.657 lb.)
Collection/Mixing Bag	62 gms	(.137 lb.)
Tracer Storage Accumulator (Charged)	104 gms	(.229 lb.)
Total CUVMS	464 gms	(1.023 lb.)

This total weight is sufficient to accommodate a five-day mission for two men, and one additional accumulator would be required for each additional five days; for the 14-day mission specification, two additional accumulators would be required, bringing the total CUVMS weight to 672 grams (1.48 lbs.).

3.3.5 CHEMICAL URINE VOLUME MEASUREMENT SYSTEM - URINE TRANSPORT SYSTEM INTERFACES AND GFE COMPONENTS

During the course of this program, as a result of NASA's continuing evaluation of the over-all Urine Transport System for Gemini, and use and tests of the CUVMS with the mock-ups, prototypes, and flight configuration hardware, certain changes took place which are described below.

1. The interface configuration of the CUVMS with the UTS was modified by the elimination of the coiled UTS drainage tube shown in drawing SKD 10030 (page 38). This provided much more space in the CUVMS-UTS 2.6 inches I.D. stowage tube, which could for example, be utilized for storage of the CUVMS collection/mixing bag. The availability of this space also could have enabled the change of the tracer storage accumulator configuration to a larger, non-replaceable unit with sufficient capacity for a full 14-day mission; however, the concept of smaller, replaceable units was retained as the components were already designed and fabricated, and the smaller units provided the flexibility desired for shorter missions, where only one accumulator would be required for up to five days use.

2. The bellows reservoir and pumping assembly was eliminated from the UTS, resulting in a UTS with less weight, complexity, and operating difficulties.

3. The interfacing of the CUVMS "Dump" outlet with the UTS drain line was accomplished by means of a short length of semi-flexible tubing, which attached at its upstream end to the outlet fitting of the selector valve (see drawing E-3453), and which was fitted at its downstream end with a quick-disconnect interfacing with the UTS drainage tube, permitting emptying of the collection/mixing bag by direct application of space vacuum. This GFE transition tube was attached to the selector valve outlet fitting by ARDE, and was treated as part of the CUVMS during Qualification Testing. Each complete flight system delivered to NASA had this tube attached, ready for final connection to the Gemini UTS drain line.

4. As design and evaluation testing bagan with prototype systems, it was obvious that the GFE urine receiver (see drawing SKD 10030, page 38) had serious deficiencies with respect to operability and convenience of use.

   In order for ARDE to properly evaluate the CUVMS, it became necessary to modify this urine receiver, as follows:

   a) Removal of a perforated screen at the bottom of the urine receiver to reduce flow restriction through this component.

E.O. NO.	SYM	ZONE	REVISIONS DESCRIPTION	DATE	APPROVED
	A	WKS/PM	(1) WHEN OUTLINE AT ITEM 3 THAN BAR		
		PLM	(2) ADDED ENGRAVING		
		RE	(3) ADDED TORQUE NOTE		
		PI	(4) ADDED AN818-4 B NUT		
		AI	(5) ADDED FASTS TO PARTS LIST		
		BI	(6) ADDED NOTES 1 & 2		
		AI	(7) ADDED FLAGS TO PARTS LIST	7/1/61	
	B	CL	(1) REVISED PICTURE TO AGREE WITH DETAIL		

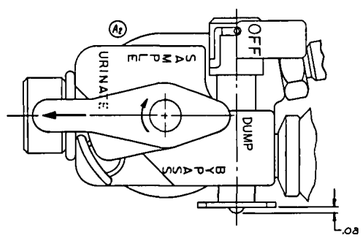

SAMPLE SYRINGE RETRACTED

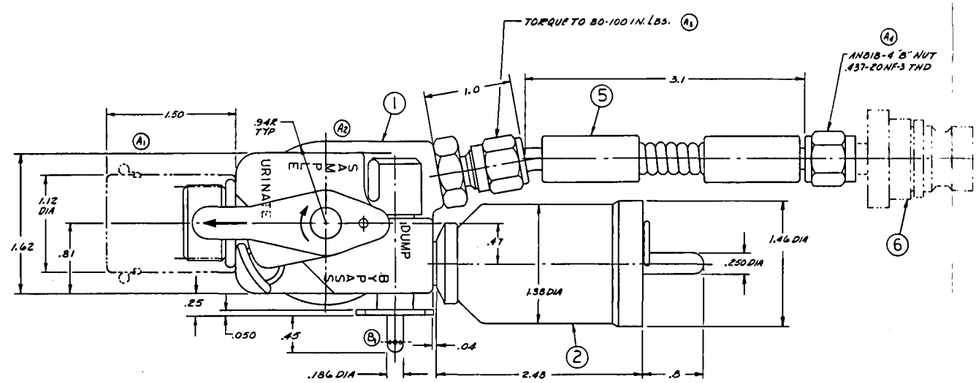

SAMPLE SYRINGE EXTENDED

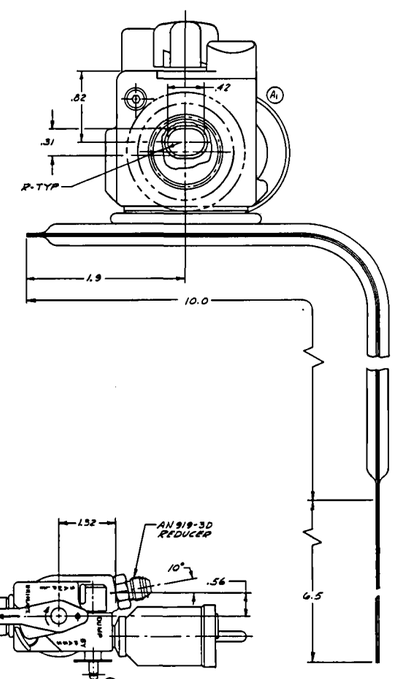

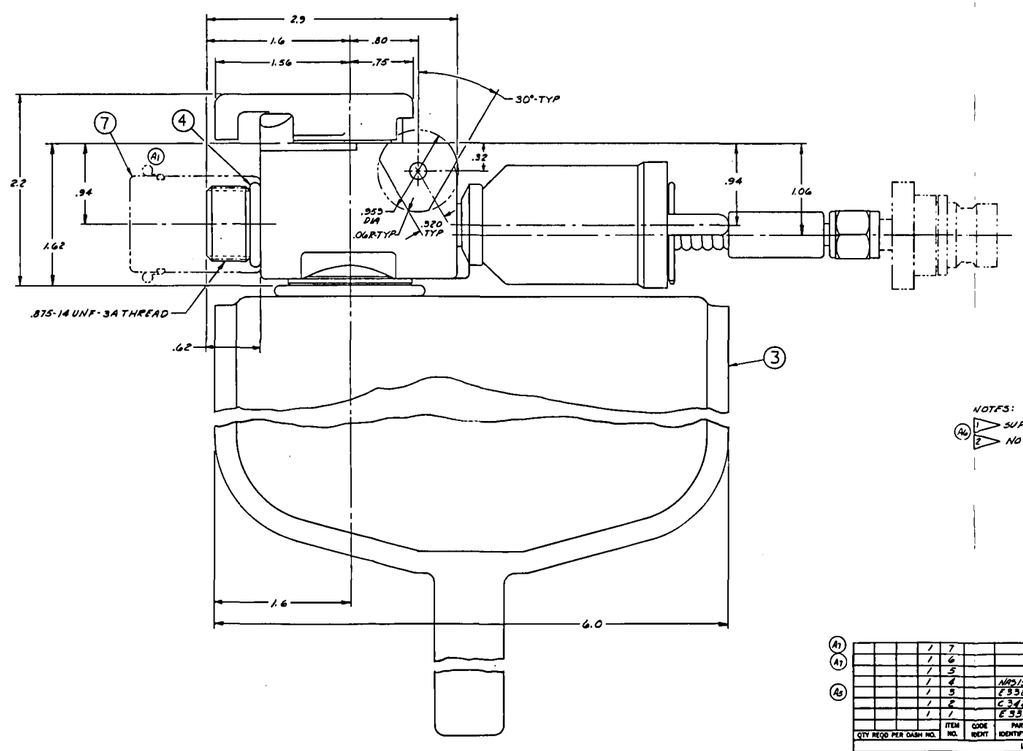

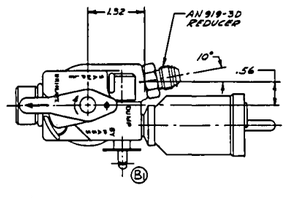

FULL SIZE

NOTES:

(A4) 1. SUPPLIED BY MCDONNELL AIRCRAFT CORP.
2. NOT SUPPLIED AS PART OF EC30100-1 ASSEMBLY.

	QTY REQD PER DASH NO.				ITEM NO.	CODE IDENT	PART OR IDENTIFYING NO.	NOMENCLATURE OR DESCRIPTION	MATERIAL	SPECIFICATION
				1	7			URINE DELIVERY ASSY		NASA EC30108
A1				1	6			JUICE DISCONNECT		M.A.C. SR-83708-117
				1	5			OUTLET HOSE ASSY		NASA EC30110
				1	4		NAS1593-116	SEAL-O-RING		
A5				1	3		E3387	BAG ASSY		NASA SUPPLIED
				1	2		E3424	ACCUMULATOR ASSY		
				1	1		E3380	SELECTOR VALVE ASSY		

LIST OF MATERIAL OR PARTS LIST

UNLESS OTHERWISE SPECIFIED
DIMENSIONS ARE IN INCHES
TOLERANCES
.X ± .03 .XX ± .01 .XXX ± .005 .XXXX ± .0005 ANGLES ± 1/2°
BREAK SHARP EDGES .005-.015
ALL SMALL FILLETS .005-.0625
THREADS PER FED. HANDBK H-28 AND SUPPLEMENTS
ALL FINISHES BY MA-0704
WELD SYMBOLS PER AWS-STD-10
BRAZING SYMBOLS PER AWS-STD-10
SOLDERING SYMBOLS PER MIL-STD-15
ALL FINISHED SURFACES 125 √
NEXT ASSEMBLY

DRAWN BY	[illegible]	7/1/61
CHECKER		
STRESS ENG'R		
AERO THERMO		
DES. ENG'R	[illegible]	7/1/61
PROJ. ENG'R		

CONTRACT NAS9-3904

ARDE, INC.
BINGHAMTON, N.Y.

TITLE CHEMICAL URINE VOLUME MEASURING SYSTEM-TOTAL ASSEMBLY (EC30100-1)

CODE IDENT NO. 05980 | SIZE E | E3453

SCALE 2:1 | SHEET

E3453 B

b) Removal of the shut-off valve built into the urine receiver to further reduce flow restriction and eliminate back leakage of urine.

c) Rebuild the urine receiver inflatable seal pump to provide reliable operation of the penis seal.

d) Design and install an aluminum sleeve inside the urine receiver to prevent blocking of the outlet hole when the penis seal was inflated.

The problems encountered with this urine receiver, including the uncomfortable tightness of the penis seal necessary to provide positive prevention of back leakage, finally led NASA to have designed a new type urine receiver which was supplied to ARDE for final system testing. This new unit consists of an aluminum cylinder which screws onto the inlet of the selector valve, and to which is attached a condom type receptacle. This new design functioned satisfactorily in the remainder of the testing performed with the CUVMS. (See drawings EC 30108 and E3453).

Flow rate tests performed with this new urine receiver and a prototype selector valve gave the following results:

REV.	LET	DATE	REVISIONS	BY
SB—EC 30108				

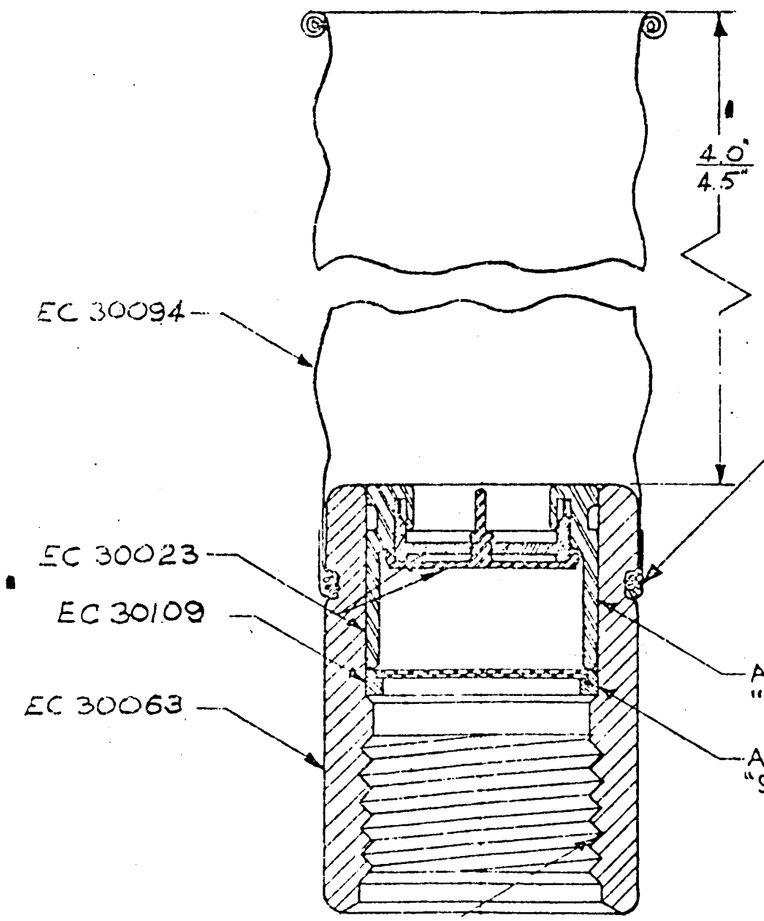

TIE EC.30094 OVER EC 30063 WITH #3 NYLON THREAD (MIL-T-7807 B) MAKING 3-5 TURNS WITH A SURGEONS KNOT AFTER EACH TURN. COAT LAST KNOT AND INNER FACE OF LAPPED JOINT WITH N136 A&B, U.B.S CHEMICAL CO.; CEMENT. FOLD LATEX OVER THREADS.

APPLY STYCAST #2651 & CATALYST "9" TO JOIN EC 30023 TO EC 30063.

APPLY STYCAST #2651 & CATALYST "9" TO JOIN EC 30109 TO EC 30063.

APPLY DC-4 LUBE LIGHTLY TO THREADS (2)

NOTES:

1. CLEAN ASS'Y WITH MILD DETERGENT SOLUTION
2. (2) APPLY DC-4 LUBE AFTER CLEANING.
3. DRY ASSEMBLY IN VACUUM CHAMBER.

ITEM	REQD.		DESCRIPTION
WT.		SCALE 2:1	MANNED SPACECRAFT CENTER HOUSTON, TEXAS
DIMENSIONAL TOLERANCE UNLESS NOTED OTHERWISE: DECIMAL PLACE ±.10; 1 DECIMAL PLACES ±.02; 3 DECIMAL PLACES ±.005; ANGULAR ±		DR. 8.18.65 / DES. / APP. / APP.	ASSEMBLY – CUVMS ROLL-ON URINE RECEIVER
SURFACE FINISH IN MICROINCHES RMS UNLESS NOTED OTHERWISE		PROJECT GEMINI	SB– EC 30108 REV.

a) "Urinate" mode, into collection/mixing bag, 36 inches water head: 40.5 ml/sec.

b) Time for 600 ml to flow from 36 inches water head to 0 inch head, into collection/mixing bag: 18 seconds

c) Flow rate in "By-Pass" mode, 5/16 inch I.D. outlet tube on selector valve drain port: 38.6 ml/sec.

These rates, particularly in the "Urinate" mode, compare favorably with the results previously obtained (see section 3.3.2) and were considered completely satisfactory, particularly since the final flight hardware had flow passages with a cross-sectioned area equivalent to a 3/8 inch diameter hole, which would further reduce flow resistance for the over-all system.

3.4 CONCLUSIONS AND RECOMMENDATIONS

3.4.1 CONCLUSIONS

The program covering feasibility and preliminary design studies, and detail design, fabrication, testing and delivery of flight qualified Chemical Urine Volume Measurement Systems led to the following conclusions.

A. Use of the chemical tracer dilution technique provides an accurate means of measuring spacecraft crewman micturition volumes under conditions of zero gravity, gas entrainment, foaming, and variable flow rates and quantities, without power consumption or complicated apparatus.

B. Man rated flight qualified hardware was built which utilized this basic volume measuring technique, and has been utilized during the GT-7 mission, with one complete system for each astronaut.

C. The CUVMS is a light-weight (1.48 pounds maximum for a fourteen day mission), small volume (approximately 15.5 cubic inches, exclusive of the collection/mixing bag), reliable man-rated equipment. It is operated with few crewman manipulations.

D. Use of the CUVMS enabled reduction in weight and volume of the over-all Gemini Urine Transport System

by the elimination of other UTS components no longer required.

E. The CUVMS provides a means of measuring micturition volumes with an accuracy better than ±5%, enabling usefully precise metabolic balances to be made for meaningful evaluation of the effects of prolonged space flight weightlessness and stress.

F. The CUVMS provides a means of obtaining samples of crewman urine to perform chemical analyses for constituents of physiological interest and significance, without interference by the tracer substance (tritiated water) employed.

G. The CUVMS can be used for missions of unlimited duration merely by carrying sufficient replacement tracer storage accumulators, each of which has capacity for at least 5 man days use. In the 14 day GT-7 mission, only two tracer storage accumulators per astronaut were used, and one per man would actually have been sufficient.

3.4.2 RECOMMENDATIONS

The Chemical Urine Volume Measurement System, although successfully designed, developed, manufactured, tested, and used in the GT-7 Gemini mission, can be further refined and improved to increase operating ease and eliminate the possibility.

of increased difficulty of sample collection due to unusual crewman urine characteristics (such as extremely high urine solute concentration or alkalinity). Other evaluations can be made of the possibility of relatively minor system component configuration changes to increase the over-all accuracy of volume measurement.

The following recommended modifications and evaluations should not change the flight qualified status of the CUVMS, and would probably result in improved system operation if implemented.

A. Addition of a thin stainless steel wear plate on the top surface of the selector valve, and change of the selector valve handle detent from a hemispherical bottom plunger to a stainless steel ball backed by a Teflon disc. This would provide a smoother acting, more positive locating action for the handle when rotated into the various operating mode positions.

B. Increase of the tracer solution tritium concentration from the nominal 14 microcuries per ml used to date, to 20 microcuries per ml. This change would provide slightly better tracer concentration accuracy determination, and could be implemented without any mechanical system modification.

C. Investigate other elastomers or soft, qualified polymeric material for the front end seal of the tracer storage

accumulator. This could provide unequivocal protection against the possibility of a particle from the seal entering the tracer metering system when penetrated by the upstream check valve needle.

D. Alter the form factor of the collection/mixing bag to retain the lowest possible residue at the end of the "Dump" operation, this providing the least effect on over-all system accuracy.

E. Provide a micrometallic mesh filter in the inlet to the tracer metering pump to positively prevent particulate contamination of the check and relief valve balls.

F. Provide a Teflon sleeve liner inside the selector valve sample bag connector port to prevent contact of urine with the connector hole walls. This will eliminate any possibility of highly concentrated or alkaline urine causing the formation of deposits in this hole, and maintain a low operating force during extension and retraction of the sample probe. An alternative to this approach is the fabrication of the selector valve sample bag connector using stainless steel; this is probably less desirable than the use of the Teflon sleeve mentioned above.

4.0 RELIABILITY AND QUALITY ASSURANCE

4.1 INTRODUCTION

This report presents, in approximate chronological order, a description of the reliability and quality assurance and control events and activities which occurred throughout the design, development, and fabrication of the Chemical Urine Volume Measurement System (CUVMS).

Reliability and Quality Assurance activities coincided with the phasing of the over-all program. That is, these activities were sub-divided into activities relating to preliminary studies, development of the mock-ups and prototypes, and fabrication of the Qualification Test and flight hardware. Each phase required specific tasks to be performed by the Reliability and Quality Assurance group.

During the Study Phase the Reliability and Quality Assurance activities were concerned with the evaluation of contract requirements and specifications, preparation of required documentation outlines, evaluation of design concepts, preliminary selection of materials and possible tracers.

During the Mock-up and Prototype Phase the Reliability and Quality Assurance activities were concerned with the preparation of required documentation, functional and reliability analysis of six proposed design concepts, the survey and selection of companies to be used as vendors for the fabrication of the mock-ups and prototype sub-assemblies, and the

evaluation, inspection, and testing of the prototype systems.

During the qualification test and flight hardware final design and fabrication phase, the reliability and quality assurance activities were concerned with the evaluation of qualification test requirements, selection of test laboratory, monitoring of tests, preparation of Qualification Test Report, inspection, testing and evaluation of flight hardware and the interpretation of test and inspection data.

The succeeding sections of this report will follow the phasing presented above. Each section will present in detail the reliability and quality assurance tasks and activities which occurred during the specific phases.

4.2 DOCUMENTATION

The reliability and quality assurance program for the Gemini CUVMS was carried out within the structure and applicable sections of the following documents:

1. NASA Contract No. NAS 9-3904.
2. Statement of Work, Exhibit A, of the contract.
3. NASA Quality Publication NPC 200-3, Inspection System Provisions for Suppliers of Space Materials, Parts, Components, and Services.
4. NASA Publication Inspection System Notes.
5. NASA Qualification Test Plan, document No. CSD-G-219.
6. ARDE, Inc. Reliability Program Control Plan.
7. ARDE, Inc. Inspection Plan.

8. ARDE, Inc. Prototype Test Plan

9. ARDE, Inc. Pre-Delivery Acceptance Test Plan

10. ARDE, Inc. Pre-Installation Acceptance Test Plan, Document No. 8642-103

11. ARDE, Inc. Volume Measurement and Calibration Procedure, document No. 8642-102

12. ARDE, Inc. Failure Reporting Procedure, document No. QCP-110

13. ARDE, Inc. Handling Procedure

14. CUVMS Operating Procedure, NASA document No. CSD-G-315

15. ARDE, Inc. Performance Characteristics

16. ARDE, Inc. Cleaning Procedure

17. MAC Document No. 8433, General Environmental Requirements for Model 133P

18. MAC Document No. 8610, Gemini Spacecraft Environmental Criteria Specification

19. MAC Document No. 6792, Physical Properties of Non-Metallic Materials for Manned Space Vehicles

20. ARDE, Inc. Manual of Policy for Quality Assurance, document No. QCP-101

21. ARDE, Inc. Internal QC Procedures

22. NASA Publication NPC 250-1, Reliability Program Provisions for Space System Contractors

23. MAC Specification 12301, Cleaning of Model 133 Environmental Control System Lines and Non-Operating Components

24. MAC Specification 20500, Fabrication and Housekeeping Policies Applicable to Models 133 and 133P Spacecraft

The activities arising from the implementation of the requirements of the above documents, plans, and procedures resulted in the generation of ARDE, Inc. reports describing the results of these activities. This ARDE, Inc. documentation consisted of the following:

1. ARDE, Inc. Reliability Prediction and Estimation Report
2. ARDE, Inc. Future Modes and Criticality Class Analysis Report
3. ARDE, Inc. Inspection Records
4. ARDE, Inc. Results of Pre-Delivery Acceptance Tests
5. ARDE, Inc. Results of Pre-Installation Tests
6. ARDE, Inc. Results of Volume Measurement and Calibration Tests
7. ARDE, Inc. Qualification Test Report
8. ARDE, Inc. Hardware Historical Documentation Packages
9. ARDE, Inc. Specification Documentation Package

4.3 PRELIMINARY STUDIES

Reliability and Quality Assurance activities started with the review and evaluation of the requirements called for in NASA Contract NAS 9-3904 and by the Statement of Work, Exhibit A. These documents were studied to determine the applicable specifications and the controlling documents pertaining to Reliability and Quality Assurance activities. The governing specification for Reliability was NASA Publication NPC 250-1, Reliability Program Provisions for Space System Contractors, specifically paragraphs 2.4, 3.3, 3.4, 3.10, and

3.14 which required the preparation and implementation of the following:

a) Reliability Program Control Plan
b) Reliability Prediction and Estimation
c) Failure Modes, Effects and Criticality Class Analysis
d) Failure Reporting and Correction
e) Equipment Logs

For Quality Assurance the governing specification was NASA Publication NPC 200-3, Inspection System Provisions for Suppliers of Space Materials, Parts, Components, and Services, specifically paragraphs 2.2 and 3.11 requiring the implementation of the following:

a) An Inspection System consistent with the requirements of this document

b) Contractor's Inspection Plan

c) Preservation, Packaging, Packing and Shipping Procedures

In addition to the above requirements, certain other documentation was required by the Statement of Work, Exhibit A, consisting of:

a) Specification Documentation Package
b) Aerospace Ground Equipment (AGE) Package
c) Hardware Historical Documentation Package

On completion of the contract and specification review, outlines were prepared for the required documentation for those aspects of the program for which it was possible to do so consistent with the status of the design at the time. The Reliability Program Control Plan, the Reliability Prediction and Estimation, and the Inspection Plan were outlined. The inspection policy was formulated and the inspection requirements were determined.

At this time it was also decided that the equipment be assembled under clean bench conditions although not specifically required by contract. The position taken by ARDE, Inc. was that since the CUVMS was intended to be used in a man-rated spacecraft, every effort should be made to assure that the reliability, quality, and cleanliness of the equipment be maintained at the highest possible levels.

During this Study Phase, ARDE, Inc. prepared several separate, possible design concepts which reflected the required configuration, volume, weight, and functionality of the equipment. These designs were reviewed by Reliability with respect to good engineering practice, minimum number of parts, use of approved materials, redundancy, fail-safe aspects, and simplicity of operation under spacecraft conditions.

Materials were tentatively selected in accordance with MAC document No. 6792, Physical Properties of Non-Metallic Materials for Manned Space Vehicles, so that at the time of final design selection by NASA/MSC, there would be minimum delay in fabrication of the prototype systems.

At the conclusion of the study phase, a design review was held to determine the most promising, feasible, and reliable designs for meeting program objectives. As a result of this design review, six (6) designs were selected and layouts prepared for each of these proposed Urine Volume Measurement Systems. On completion of the layouts, another design review was held by Reliability and project personnel which resulted in certain design modifications intended to increase the reliability, operability, and simplicity of the proposed designs.

When the above modifications were incorporated into the proposed designs, system comparison calculations were prepared, taking into consideration reliability, weight, volume, and ease of operation. These calculations were prepared in detail and included functional analysis, operational complexity, preliminary reliability predictions, and the possible tradeoffs of these characteristics. The results of these calculations, analyses, and the detail layouts were submitted to NASA/MSC together with the Sixth Weekly Status Report, and are included in Appendix C.

Pending the decision by NASA/MSC with respect to which of the six proposed designs would be selected for prototype and flight hardware development and fabrication, Reliability and Quality Assurance activities continued in the areas of material selection and reviews of the detail design of system components common to all six of the proposed designs. A system evaluation and design review meeting between ARDE, Inc.

and NASA/MSC resulted in the selection of System Type III which was to be modified to include the following design changes.

a) Replaceable tracer storage accumulator component

b) Tracer storage accumulator capacity reduced to 20 ml from 60 ml

c) Selector valve to accept replaceable tracer storage component

d) Sampling probe diameter to conform to NASA/MSC sketch RSS 2-18-65

These modifications presented reliability problems associated with the connection of the tracer storage accumulator to the selector valve. This connection had to withstand shock and vibration tests and be so designed as to preclude the introduction of air bubbles into the system.

The decision to use tritium as the tracering chemical led to tests to evaluate the accuracy and reliability of this method. Tests to determine a suitable material for the elastomer bladder for the original accumulator design were conducted. These tests were intended to determine the suitability of the elastomer materials for use in the tracer storage accumulator design concept.

Work was started to establish a contractor quality assurance system consistent with contract requirements. The writing of a Quality Assurance Manual of Policy based on MIL-Q-9858

modified by NPC 200-3 was initiated. Basic procedures of immediate importance, such as vendor survey and review of purchase orders were completed. A policy was established to control the method of inspection of prototypes and the Qualification Test and flight hardware.

4.4 MOCK-UP AND PROTOTYPE PHASE

Quality Assurance surveys were made of several potential model fabricating facilities to determine a suitable source for making the two (2) weight-shape-volume mock-ups. These surveys included visits to the fabricators' plants, interviews with their Quality Assurance and Engineering personnel, and inspection of their plant facilities.

A vendor was selected and a purchase order prepared which, after review by Quality Assurance, was released by Purchasing, authorizing the start of mock-up fabrication. The mock-ups were successfully completed, subjected to over-all visual inspection by ARDE, Inc. and submitted to NASA/MSC.

Detail design of prototype components started simultaneously with mock-up design, and additional Quality Assurance surveys were made of several potential manufacturers for prototype system sub-assemblies and detail parts. Suitable manufacturers were selected and purchase orders released, subsequent to Quality Assurance approval, for the manufacture of sub-assemblies and parts for five (5) prototype systems.

When tests of various elastomers proved the unavailability of a suitable material for the bladder-type tracer accumulator design, back-up approaches to the accumulator design were formulated. These back-up designs utilized gas pressure and spring loaded piston and Bellofram combinations for the expulsion of the tracer into the system. Construction, test, and evaluation of several prototype components resulted in detail examination of the Bellofram operated component. The design of the spring loaded piston was such as to permit storing the tracer within the accumulator with the piston spring held compressed until actually used, resulting in no pressure being applied to the contained tracer and thus increasing the reliability of this component. This latter design was selected for the final system configuration.

Simultaneously with the design and fabrication of the prototype tracer storage accumulators, results of urine volume measurement accuracy tests utilizing tritium as the tracer substance proved to be well within the specified requirement of ±5%. The tests included volume measurements performed on urine aged for up to 15 days. The aging of the urine did not result in degradation of either the accuracy or the reliability of the method.

In order to provide for the proper facilities for the calibration of the CUVMS hardware and the determination of volumes in-house, ARDE, Inc. procured a Packard Instrument Company Liquid Scintillation Spectrometer, Model 3314, and established a facility for its utilization.

During this phase of the project, the Reliability Program Control Plan was completed and submitted to NASA/MSC. This plan described in detail, the following aspects of the Reliability operation.

1. Reliability and Quality Assurance organization at ARDE, Inc.
2. Reliability tasks to be performed during the duration of the over-all program
3. Design reviews
4. Reliability prediction and estimation
5. Failure modes, effects, and criticality class analysis
6. Component and system tests, results and evaluation
7. Failure reporting and correction
8. Equipment Logs
9. Vendor control

The purpose of the Reliability Program Control Plan was to provide a system permitting management to control and audit the Reliability program by means of specifically identified tasks. Each of the tasks enumerated above was implemented at a suitable time during the over-all program, and where necessary, the results of these implementations were submitted to NASA/MSC. The implementation of this plan permitted the Reliability group to exercise control over the design, test, and evaluation of the Qualification Test and flight hardware systems.

The Manual of Policy for Quality Assurance was completed and submitted to NASA/MSC. The manual established the Corporate Policy with respect to Quality Assurance and presented the following procedures in detail.

1. Control of Purchased Supplies
2. Control of Subcontracted Purchase Orders
3. Vendor Selection
4. Receiving Inspection
5. In-Process Inspection
6. Final Inspection
7. Government Source Inspection
8. Inspection Tags
9. Inspection Stamps
10. Control of Non-Conforming Materials and Supplies
11. Control of Tools, Gages, and Measuring Instruments
12. Control of Manufacturing Tools
13. Drawing and Change Control
14. Corrective Action
15. Limited Shelf Life Items
16. Control of GFE
17. Material Review
18. Scrap Control
19. Packaging for Shipment
20. Control of Special Processes

The applicable requirements of the Quality Assurance Manual were used to control the manufacture, inspection, test, and evaluation of the Qualification Test and flight hardware systems.

The Inspection Plan for the Chemical Urine Volume Measurement System was completed and submitted to NASA/MSC. The Inspection Plan was based on the requirements set forth by the Manual of Policy for Quality Assurance. Applicable procedures contained in this manual were abstracted and modified to meet the specific needs of the CUVMS when so required. The overall Inspection Plan consisted of the manual for the narrative part of the inspection requirements and a Product Flow Chart showing the inspection and test operations which were performed at ARDE, Inc. and at vendor locations. Additional special procedures controlling the detail operations at the various stations shown on the Product Flow Chart were also implemented.

In those instances where parts or sub-assemblies of the equipment were manufactured by an outside facility, the Quality Control documents of that outside facility were appended to and formed a part of the submitted Inspection Plan. The following special procedures were contained in the Inspection Plan in addition to the ones contained in the manual.

1. Procedure for Receiving the Chemical Urine Volume Measurement System Components
2. Procedure for Receiving Inspection of the Urine Volume Measurement System
3. Assembly Instructions for Urine Volume Measurement System
4. Procedure for System Tests of the Urine Volume Measurement System
5. Procedure for Final Inspection of the Urine Volume Measurement System

6. Procedure for Packaging the Urine Volume Measurement System on the Clean Bench

7. Procedure for Receiving Inspection of Government Furnished Sample Bags

8. Procedure for Failure Reporting, Analysis and Corrective Action

The implementation of the Inspection Plan permitted Quality Assurance to exercise control over the inspection and test of the qualification test and flight hardware systems.

The Prototype Test Plan was completed and submitted to NASA/MSC. This plan was intended to demonstrate the various characteristics of the Chemical Urine Volume Measurement System and to validate the prototype design.

The system characteristics to be demonstrated by the tests called for in the Prototype Test Plan were:

- Performance
- Ease of operation
- Accuracy
- Compatibility with the Gemini UTS

Tests were performed on the individual major sub-assemblies (Selector Valve, Accumulator, Sample Bag/Mixing Bag) and on the completely assembled system. All of the prototypes (S/N 1 through 5) were subjected to the Prototype Tests.

The tests performed on the sub-assemblies were as follows:

Selector Valve

Operation of handle and detents

Operation of metering pump

Determination of the amount of tracer delivered

Operation of sample injector needle

Freedom from leaks under pressure

Freedom from leaks under vacuum

Restriction of flow under design flow rate specifications

Operation of tracer metering pump check valves

Accumulator

Method and ease of filling with tracer fluid

Total amount of tracer fluid delivered

Leakage

Collection/Mixing Bag

Amount of tension when filled with maximum amount of liquid (800 ml)

Residual amount of liquid remaining in Mixing Bag after dump operation

Pressurization tests

Sample Bags

No formal tests performed (GFE)
Sample Bags were satisfactory as used, except for initial difficulty in attaching to the Selector Valve.

Tests performed on the complete system consisted of the following.

System calibration using 100, 250, 500 ml volumes of liquid

Volume measurements over range of design volumes (100 to 500 ml)

Volume measurements with maximum and minimum design volumes after exposure to high temperature (200°F)

Volume measurements with maximum and minimum design volumes after exposure to low temperature (0°F)

As a result of the prototype tests, certain problem areas were revealed and design review meetings were held. As a result of the design reviews, changes and modifications were made to eliminate the problems. The main problems are described below.

1. Resistance of sample bag seal to penetration by sample injection needle - This problem was eliminated by sample probe configuration changes.

2. Leakage of both upstream and downstream tracer metering pump check valves - This problem was

eliminated by the use of elastomer sealing balls and by special finishing of the valve seats.

3. Selector valve handle ramp angle was modified to provide reliable full depression of metering pump piston.

4. The selector valve handle detent assembly was modified to reduce binding action during rotation.

A test fixture was constructed and placed into operation in connection with the prototype tests. This fixture permitted making flow tests, calibrations and volume measurements under standardized conditions.

The Failure Modes, Effects, and Criticality Class Analysis was prepared and submitted to NASA/MSC. This analysis presented sixty-two (62) possible modes of failure together with the probability of occurence of each mode. Each mode was categorized as to Criticality Class I, II, or III, Crew Safety, Mission Abort, and "Other" respectively.

A design review was held prior to finalization of the qualification test and flight hardware design configuration. This review took into consideration the problems revealed by the prototype tests for resultant modification of the final prototype hardware design.

The Qualification Test Plan supplied by NASA/MSC was reviewed and comments forwarded to the agency. Surveys and

evaluations of testing laboratories were made and a laboratory was selected to perform the Qualification Tests.

Compatibility tests were performed to determine the effect of the tracer liquid on the elastomer check valve balls (Viton and Ethylene-Propylene synthetics). The tests proved these materials to be satisfactory, with the E-P material finally chosen on the basis of its slightly superior properties.

A fully charged accumulator was tested for a period of four hours at a temperature of 210°F to determine the effects of thermal expansion of the tracer liquid on the front end seal and the Bellofram seal. The tests proved both seals to be satisfactory and no leakage was observed.

An endurance test of 1,100 full operating cycles was performed on prototype S/N 3. The test involved rotating the selector valve handle through 360 degrees for each cycle. There was no binding of the handle during any part of the test. This test also involved recharging and re-attaching of the accumulator eighteen times. There was no adverse effect on the front end seal.

The scintillation spectrometer was placed into operation and volume measuring techniques were developed. Results of these techniques showed statistical correlation sufficient to assure that volumes could be measured within the specified system accuracy requirements.

A laboratory procedure for the determination of tritium concentration for volume calculations was developed. The procedure

covered laboratory techniques and methods of volume calculation as applied to both calibrations and volume measurements.

A Pre-Delivery Acceptance Test Procedure was prepared and submitted to NASA/MSC. The procedure covered the following tests to be performed on all flight and qualification test hardware prior to acceptance by the Government Inspector and shipment to destination.

1. Visual inspection
2. Operational tests
   a) Setting of upstream and downstream tracer metering pump check and relief valves
   b) Pressure-Leakage tests
   c) Flow tests
3. Calibration of the tracer metering pump and check determinations of "unknown" volumes
4. Preparation for shipment

4.5 QUALIFICATION TEST AND FLIGHT HARDWARE PHASE

During this phase (which ran concurrently with the end of the prototype hardware program effort) the Qualification Test Schedule was prepared, finalized, and submitted to the testing facility.

Two flight qualification test systems were fabricated and assembled. These systems were serialized as S/N 6 and S/N 7. A third CUVMS (S/N 8) was also assembled and designated to be delivered to McDonnell Aircraft Corporation, Kennedy Space Center, as a flight qualifiable unit under the accelerated effort being implemented, to be considered a flight qualified system after completion of the Qualification tests.

During the Pre-Delivery Acceptance testing of S/N 8 several problems became apparent, as follows:

1. Black particles were observed coming out of the sample probe during operation in the "Sample" mode. Investigation showed these particles to be parts of disintegrated Viton O-rings. It was established that the break-up of the O-rings was due to previous erroneous cleaning of the selector valve assembly with Methyl Ethyl Ketone (MEK). The O-rings were replaced and a corrected cleaning procedure instituted.

2. The selector valve handle was noted to override past the "Urinate" position when passing over the metering piston plunger. A new handle and detent was designed and installed prior to shipment, to correct this condition. This new handle also improved the "human engineering" operability aspects of the system.

3. Drainage time in "Dump" operation suddenly increased from 30 seconds to over 2 minutes. This was caused by the drainage tube becoming uncemented inside the collection/mixing bag as a result of improper curing. The drainage tube was replaced and properly cemented and cured prior to shipment.

System S/N 8 was re-worked to correct the deficiencies previously mentioned, submitted to GSI, and shipped as required to Kennedy Space Center.

Systems S/N 6 and S/N 7 were subjected to and successfully passed the Pre-Delivery Acceptance tests. On completion of these tests the systems were shipped to the testing laboratory for Qualification testing. As a result of schedule pressures the Qualification tests were run as follows:

1. Initial, partial qualification on the basis of four-day tests for humidity, oxygen compatibility, and urine compatibility. These tests were to qualify the system for the four-day scheduled GT-6 mission.

2. Re-run of the above tests for the full specified

duration of ten and fourteen days for humidity, oxygen compatibility, and urine compatibility respectively. After completion of all other qualification tests, these re-runs would qualify the CUVMS flight hardware for use in the 14-day GT-7 mission.

3. All other tests were performed in accordance with the Qualification Test Plan without deviation.

The Qualification Tests were performed on the systems designated below and completed in the following sequence.

1. Oxygen Compatibility, four-day test: S/N 7
2. Humidity, four-day test: S/N 6
3. Acceleration: S/N 7
4. Decompression: S/N 7
5. Pressure-Leakage: S/N 7
6. Vacuum: S/N 7
7. Vibration: S/N 7
8. Shock: S/N 7
9. Urine Compatibility, four-day test: S/N 7
10. Low Temperature with varying pressure: S/N 6
11. High Pressure: S/N 7
12. Oxygen Compatibility, 14-day test: S/N 6
13. Humidity, ten-day test: S/N 6

14. Urine Compatibility, 14-day test: S/N 7

15. High Temperature with varying pressure: S/N 6

In addition, system performance tests were conducted as follows:

1. Pressure-Leakage tests: S/N 7
2. Vacuum tests: S/N 7
3. Collection/Mixing Bag attachment: S/N 7
4. Cycling tests: S/N 7

Both systems completed the Qualification tests successfully and were qualified for the ultimate 14-day mission (GT-7). Details of test results and actual data sheets were submitted in the Qualification Test Report, ARDE, Inc. document No. 8642-104. On completion of Qualification testing the systems S/N 6 and S/N 7 were returned to ARDE, Inc. by the testing laboratory.

Subsequent to performance of the Qualification tests, a meeting was held at NASA/MSC/CSD during which a review of the Qualification test data was held, and certain additional requirements and design modifications were imposed by the procuring agency. A request was made to provide the selector valve with flow passages equivalent to a 0.375 inch diameter cross section in the "Urinate" mode. This was in order to provide the lowest possible resistance to flow, which subjectively seemed desirable. The collection/mixing bag attachment fitting was to be changed from the bayonet type to

a screw-on type. These changes were required to be incorporated into systems S/N 9, 10, 11, and for S/N 8 after its return to ARDE, Inc.

Work specified above was instituted and completed as required on S/N 9, 10, 11; the re-work of S/N 8 will be discussed in a later section of this report.

When system S/N 9 was modified as requested and completed Pre-Delivery Acceptance tests successfully, it was submitted for GSI and shipped to Cape Kennedy.

The Pre-Installation Acceptance Test Procedure was completed and submitted to NASA/MSC. This procedure specified the actions to be completed prior to the installation of a CUVMS into the spacecraft. These actions were as follows:

1. Visual inspection to determine that no damage had occurred in transit. The inspection was with respect to the individual sub-assemblies and the system as a whole.

2. System tests covering volume measurements using 100, 250, and 500 ml sample volumes.

3. The Procedure for Selector Valve Tracer Metering Pump Calibration and the Determination of Unknown Volumes by Liquid Scintillation Spectrometer Counting Technique was finalized and submitted to NASA/MSC. This procedure, ARDE, Inc. document No. 8642-102,

gives step by step instructions and detailed laboratory techniques for the following:

A. Preparation of Solutions

B. Use of Liquid Scintillation Spectrometer

C. Pipette Calibrations

D. Preparation of Samples and Sample Activity Counting

E. Quench Correction and Data Interpretation

F. Calibration and Volume Determination Calculations

G. Tracer Storage Accumulator Charging Procedure

The Performance Characteristics Report was prepared and submitted to NASA/MSC.

The shipment of the flight qualified systems involved the preparation and submission of the Hardware Historical Documentation and the Specification Documentation packages. These packages consisted of:

1. Historical Documentation Package

   a) Government Inspection records
   b) Gemini Component Historical Record, Form 772
   c) Acceptance test results associated with each item delivered

2. Specification Documentation Package

   a) Design specification
   b) End item envelope drawing
   c) Interface schematics
   d) Performance characteristics
   e) Qualification Test Plan
   f) List of Materials
   g) Acceptance Test Procedures (ATP)

      . Pre-Delivery Acceptance Test Plan
      . Pre-Installation Acceptance Test Plan
      . Special Handling Procedures

The Special Handling Procedure consists of the following:

1. System and sub-assemblies must not be removed from sealed pliofilm bags except under clean bench conditions until installation into the spacecraft.

2. Do not turn selector valve handle in a counter-clockwise direction when in the "Urinate" or "Sample" position.

3. Do not operate selector valve handle when charged tracer storage accumulator is attached to system, except when in actual use. Operation of handle will cause the discharge of tracer chemical if passed over tracer metering pump plunger.

4. Do not attempt to make adjustments of spring loads of detents or check valve setting screws.

5. Do not remove aluminum seals. These are designed to be permanently attached during shipment, storage, and use.

6. No other special handling procedures were required except normal care in use and operation.

4.6 FINAL FLIGHT SYSTEM HARDWARE QUALITY ASSURANCE ACTIVITIES

During demonstration of system S/N 9 at Cape Kennedy, a binding action of the selector valve handle was experienced when the handle was being passed over the tracer metering pump plunger during rotation to the "Urinate" position.

Investigation of this operating difficulty resulted in the finding that the spring used under the override button of the tracer metering pump assembly was being compressed almost to its closed coil length during operation. This resulted in a spring force of about 17 pounds in contrast to the 9.7 pounds design force. This malfunction was corrected by the installation of a proper spring conforming to specifications, resulting in selector valve handle operation without binding.

Subsequent to this corrective action, volume samples were taken at Cape Kennedy with this system. These samples, when counted at ARDE, Inc., showed system accuracy outside of specification. This accuracy error was ascribed to the conditions under which the samples were taken, as at that time, standardized volume measurement apparatus fixtures were not available at Cape Kennedy. Volume measurements were re-run at ARDE, Inc. under standard laboratory conditions but the results of these measurements for S/N 9 were still unacceptable. It was decided to completely re-check and re-inspect the subject system to re-submit it for Pre-Delivery Acceptance test prior to submitting again to NASA/MSC.

Consequently, system S/N 9 was completely disassembled, 100%

re-inspected, and put through the Pre-Delivery Acceptance test successfully. It was then submitted for GSI and shipped. The unacceptable volume accuracies previously obtained appeared to be the result of changes in the tracer delivery calibration due to disassembly at Cape Kennedy to replace the spring.

System S/N 10 was Pre-Delivery Acceptance tested, submitted for GSI, and shipped to Cape Kennedy. During Pre-Installation Acceptance Tests on system S/N 10 at Cape Kennedy, it was found that the sample probe was cutting particles of rubber from the GFE sample bag stoppers during withdrawal from the stopper. To eliminate this problem the sample probe tip configuration was re-designed to provide eight smaller diameter radial holes in place of the two large holes previously used; a new probe was installed with consequent elimination of this problem, and this change was also implemented on all flight qualified hardware.

In order to obtain additional pre-flight operating experience with the Chemical Urine Volume Measurement Systems, NASA requested that Qualification test system S/N 7 be modified to the latest flight configuration. Subsequently it was to be transmitted to AMRL-WPAFB for a simulated 14-day mission in the space simulator chamber. Modifications were to be performed by NASA.

Information was received that system S/N 7, in operation in the space simulator at WPAFB, experienced a malfunction consisting of a frozen sample probe. The probe froze in the

retracted position after two and one-half days of use. It was determined that the freeze-up was due to an accumulation of deposits between the sample probe shaft and the guide hole in the sample bag connector. Cleaning and removal of the deposits restored the system to operation. This same malfunction recurred after an additional two days of use. It was known that the test subject urine during this run was unusually concentrated and alkaline, and unlike the urine compositions expected during actual missions; and in order to circumvent further difficulty during the chamber run, a sample probe wiping procedure was recommended and instituted. This procedure permitted the run to be completed without incident, and this procedure, plus coating the outside surface of the probe with a silicone compound prior to retraction into the selector valve after taking a sample, was recommended for use in the actual mission. ARDE suggested to NASA that the selector valve sample bag connector hole be lined with a Teflon insert, and selector valve S/N 6 was modified in this manner for demonstration purposes, but the time schedule for preparation for actual mission use did not permit implementation of this change.

System S/N 11 was Pre-Delivery Acceptance tested, submitted for GSI and shipped.

Pre-Installation Acceptance tests were performed on systems S/N 9 and S/N 11 at Cape Kennedy and the results of these tests were transmitted to NASA/MSC for acceptance of these systems to be used in the GT-7 mission.

The GT-7 mission was successfully accomplished with no reported malfunctions or problems associated with the ARDE, Inc. Chemical Urine Volume Measurement System.

5.0 BIBLIOGRAPHY

1. Udenfriend, S., Fluorescence Assay in Biology and Medicine; Academic Press, New York, N.Y. 1962.

2. Brodie, B.B. and Udenfriend, S., The Estimation of Quinine in Human Plasma with a Note on the Estimation of Quinidine, J. Pharm. & Exp. Therapenties, 78, 154 (1943).

3. Kelsey, F.E., and Geiling, E.M.K., The Micro Determination of Quinine in Blood and Tissues, J. Pharm. Exp. Ther. 75, 183, (1942).

4. Brodie, B.B., Udenfriend, S, etal, The Estimation of Basic Organic Compounds in Biological Material, II. Estimation of Fluorescent Compounds, J. Biol. Chem., 168, 311 (1947).

5. Bray, G.A., A Simple Efficient Liquid Scintillation for Counting Aqueous Solutions in a Liquid Scintillation Counter, J. Anal. Biol. Chem., 1, 279, (1960).

6. Butler, F.E., Determination of Tritium in Water and Urine, Anal. Chem., 33, 409, (1961).

7. Ross, H.H., Color Quench Correction in Liquid Scintillation Systems Using an Isolated Internal Standard, Anal. Chem., 37,

8. Herberg, R.J., Statistical Aspects of Liquid Scintillation Counting by Internal Standard Technique, Anal. Chem., 35, 786, (1963).

9. New England Nuclear Corp., Boston, Mass., Cataloque L, (1964).

10. National Bureau of Standards Handbook 69, Maximum Permissible Body Burdens and Maximum Permissible Concentrations of Radionuclides in Air and Water for Occupational Exposure (1963).

11. National Bureau of Standards Handbook 80, A Manual of Radioactivity Procedures (1961).

12. Packard Instrument Co., La Grange, Ill., Operating Manual for Tri-Corb Liquid Scintillation Spectrometer.

APPENDIX A

METHODS OF INJECTING SOLID AND LIQUID TRACER CHEMICALS

INTRODUCTION

This discussion summarizes the results of a study made of methods of injection quantities of tracer chemical into urine. This discussion is generalized and is independent of any specific system design.

Solid Tracer

A solid tracer chemical should be in a spherical pill form for ease of dispensing through a curved magazine storage system. Because a flat wafer would have to be about .08" thick to have sufficient mechanical strength, the required 202 such wafers form a stack 16-1/8" high. Since there is no storage volume in the present Urine Transport System envelope which could house this length plus a load spring, a coiled-up feeder tube will be required. Using a .150" diameter spherical pill, a 30-1/2" long magazine will be required. Figure S-1 shows a possible layout of such a coiled magazine.

The exterior of the pill must be hard in order to prevent flaking during storage and operation. This is required to maintain accuracy of the chemical tracer in the pill and prevent possible mechanism

friction or jamming. This design is practical from a mechanical standpoint but the time lag to dissolve this hard coating will make dissolving the pill even slower.

A pill size of .150" diameter would be small enough to pass freely through the urine passages in the selector valve into the mixing bag. Figure S-2 depicts a single shot injector plunger design. This method would work but must be rejected because the crewman would have to hand load each tracer pill. This would not be acceptable, especially when wearing gloves.

Figure S-3 shows a design where a magazine such as the type in Figure S-1 drops a pill into a spring loaded cavity in the rotating body of the selector valve. Then when the valve plug is rotated to the "Urinate" position, this cavity will pass by the urine transport line. The spring will inject the pill into the urine line where it will be washed into the mixing bag by the flow of urine. This is a good design approach but still suffers from the slow dissolving of the pill. Figure S-4 accomplishes the transfer of the tracer chemical pill by a traverse slide which picks up a pill from the magazine and then moves into and becomes part of the urine line between the urinal and the mixing bag. Since the pill transfer cavity is also a urine passage it must be .25" diameter so that with a .150" diameter pill there is danger of picking up more than one pill or cutting a pill. Therefore, a large pill .22" diameter must be used. This will make the pill reservoir somewhat larger than the S-2, S-3 or S-5 designs (.22 x 202 = 44-1/2" long magazine).

Mean Diameter 2.00 - .27 = 1.73" diameter

number of turns $\frac{44.5}{1.73}$ = 8.2 turns

length = 8.2 x .27 = 2.21"

The overall size including spring follower, etc., is 2" O.D. x 2-1/4" long.

The action of the transfer arm can be tied into the operation of the selector valve handle by use of a simple cam and return spring so that injection of the pill could be automatic.

This method is conceptually practical but the "O"-ring seals may prove to be a reliability problem.

In Figure S-5 the pill is injected directly into the mixing bag (for a single mixing bag design) through a flap check valve molded into the neck of the bag. In this design, each time the handle of the transfer piston is pulled back it will pick up a pill from the storage magazine and then push it through the flap check valve into the bag. The flap of the valve will give the pill a push so that it will not be drawn back into the transfer tube when the piston is removed before the urine is introduced into the mixing bag.

One overall problem with a solid injection system is that the cavity that actually carries the pill from the magazine to the urine passage can get wet and when a fresh pill is injected some of the exterior of the pill could dissolve, thus changing the weight of the tracer chemical injected into the bag.

Liquid Tracer

Figure L-1 shows a liquid tracer chemical metering pump and storage system. In this design the total tracer chemical is stored in the pump chamber and a micrometer control piston ejects the required quantity of tracer for each micturition.

A detent locks the screw at an exact position to give an accurate displacement of the piston. This sytem is subject to two classes of error: first, accuracy of the screw pitch must be extremely high from end to end and extreme consistency of the diameter of the bore of the reservoir is required. Some very accurate micrometer metering pumps exist so that the problem can be handled. The second error is more significant, in that a change in temperature will change the density (therefore volume) of the liquid tracer chemical much more than its container. This could cause very large errors, up to ±100% over the specification temperature range in the tracer injected at any point in the cycle. Therefore, this approach had to be rejected.

Figure L-2 has the same basic features as L-1 except that a ratchet drive mechanism is used in place of a micrometer screw. This unit suffers from the high volume change due to temperature variation and has an inherently poor piston actuating mechanism. It was, therefore, rejected as unsuitable.

Figure L-3 depicts a pump with inlet and outlet check valves (a pressurized chemical storage system would also be required, and designs for such a system are discussed in a later part of this section.

This arrangement has good consistency because the same portion of the pump is used each time a shot of tracer chemical is required. Thermal errors are reduced to ±.44%, for only the expansion of the volume in the metering piston has an effect on the quantity forced past the check valve and not the total volume of the tracer chemical as in the L-1 and L-2 systems.

A form of this type of metering pump has been chosen for the Type II, III and VI Chemical Urine Volume Measuring Systems.

Figure L-4 shows a metering cavity that is charged by pressure from the tracer chemical storage and discharges into the urine mixing bag line by action of a built-in return spring. A three-way plug valve controls the flow of tracer first from the reservoir into the metering cavity and then from the metering cavity to the urine mixing bag. This is an acceptable way to accomplish the metering of the tracer chemical, the only high risk area being the sealing of the three-way plug valve with a continuous pressure on the tracer supply.

Figure L-5 shows another metering cavity but of a free piston double acting design. This approach eliminates a spring to eject the tracer chemical from the metering piston to the urine bag but requires the extra complication of a "Geneva" drive gear for the four-way valves. Sealing of the four-way valve is also critical in this design.

Figures L-6, L-7, L-8 and L-9 show four variations of a sealed pocket of liquid tracer chemical. In the case of Figures L-6 and L-7, the pocket of tracer chemical is attached to the sample bag and a special piston is provided that will crush (L-6) or pierce (L-7) this capsule and force the tracer chemical into the urine bag.

In Figure L-8, the capsules of tracer chemical are strung together in a continuous strip where the action of the valve handle would advance the capsules one at a time, when needed. These designs are relatively complicated with extra sealing problems in the capsule puncturing chamber.

The design shown in L-9 is simple but the hand feeding of the small capsules with a gloved hand was deemed impractical.

Figure L-10 depicts the design of a single bag with the tracer chemical preloaded in the bag. The system has inherently very high accuracy, as it can be loaded on the ground using extremely accurate (±0.1%) micrometer type syringes.

Another advantage in storing the tracer chemical directly inside each mixing/sample bag is that it will wet the entire bag surface and therefore present a very large surface for mixing with the incoming urine. This approach was used in the Type I system.

Figures TS-1, 2, 3, 4, 5 and 6 show configurations for pressurizing liquid tracer chemical storage containers.

Types TS-1, TS-2 and TS-4 are all practical, but they will deliver the tracer at consistently varying pressure. This may not be desirable as it will require a higher exit check valve pressure.

Type TS-3 requires an additional timed operation by the pilot, and the pressure will be a function of squeeze that he exerts during any given cycle.

The TS-5 system will give nearly uniform pre-loading pressure but it requires an additional penetration of the spacecraft and thus a potential increase in the rate of loss of cabin air. For this reason, it is rejected. It is also relatively heavy and bulky.

Configuration TS-6 is an inflated Viton rubber balloon which has the desirable uniform delivery pressure over about 90% of its expulsion range. It is lightweight and requires no external piping.

This design approach was used for the tracer storage for the Types II, III and VI valve systems.

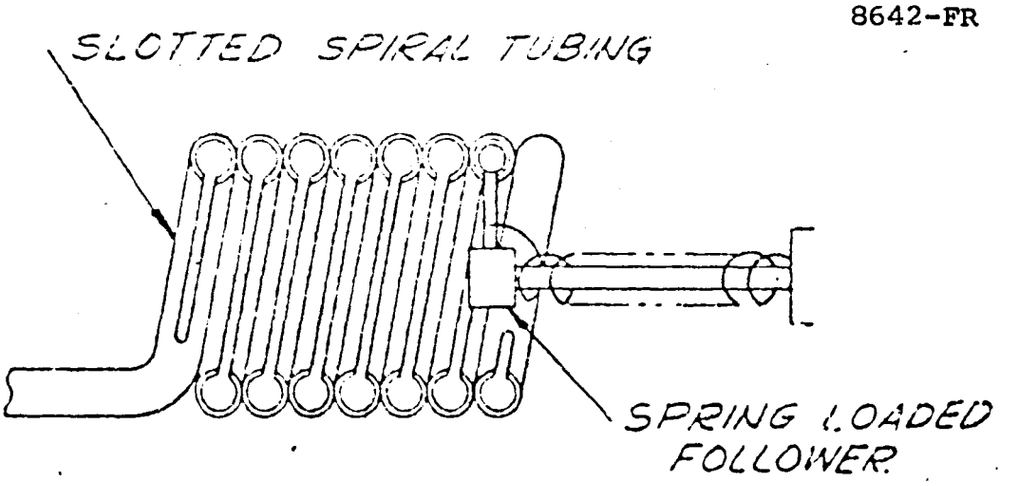

S1 - SPIRAL MECHANISM

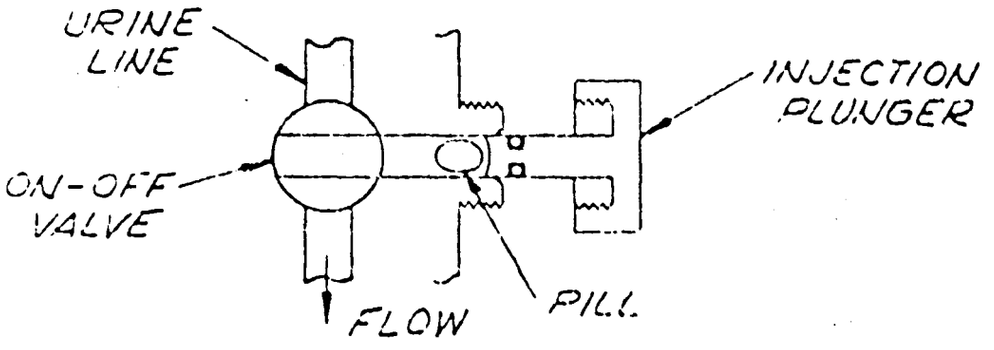

S2 - INJECT TRACER PILL INTO PLUG OF ON-OFF VALVE OR SELECTOR VALVE

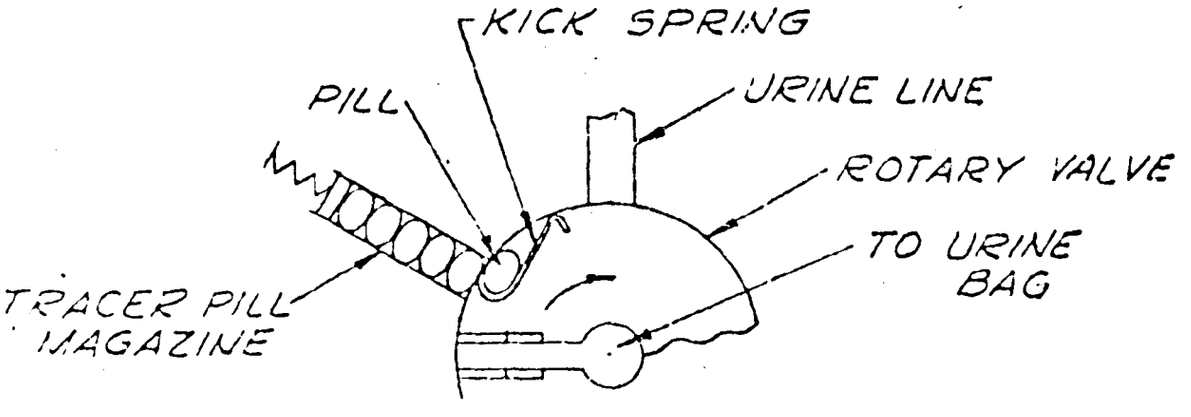

S3 - DRAW PILL INTO SYSTEM WITH ROTARY ACTION OF SELECTOR VALVE

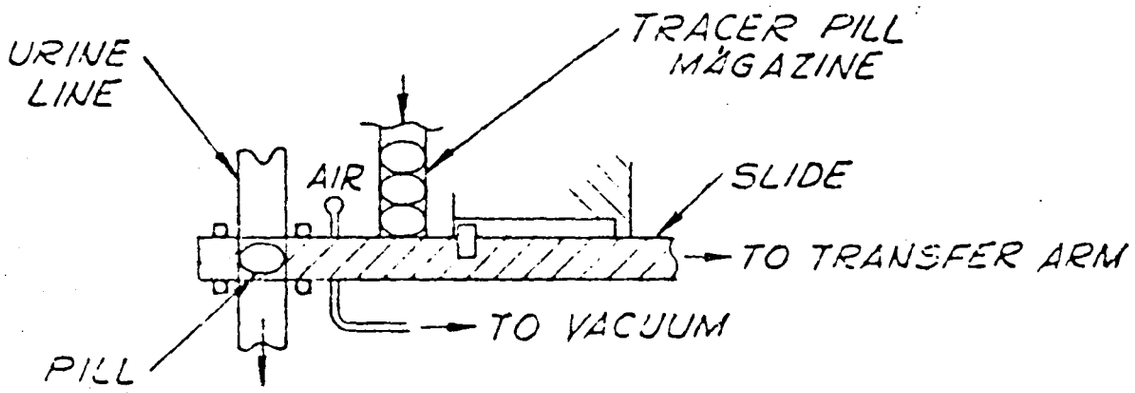

S4 - SLIDE TRANSFER

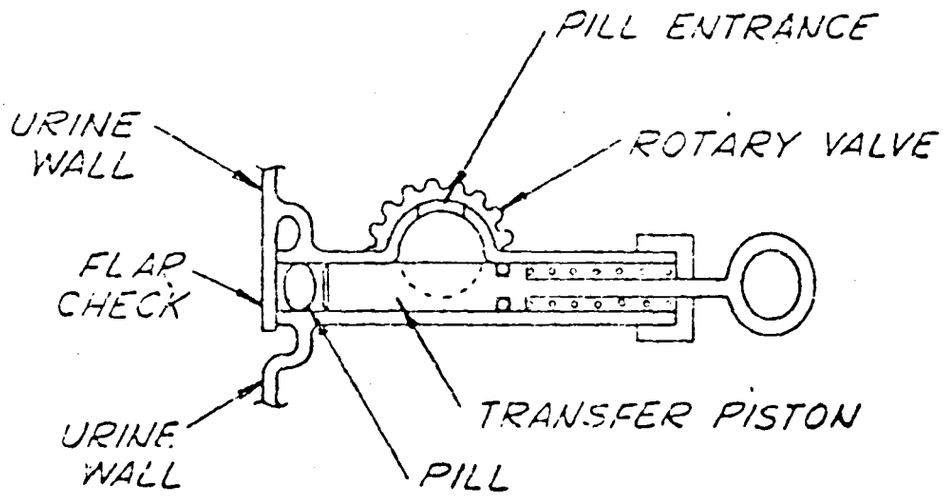

S5 - TRANSFER PILL INTO URINE BAG

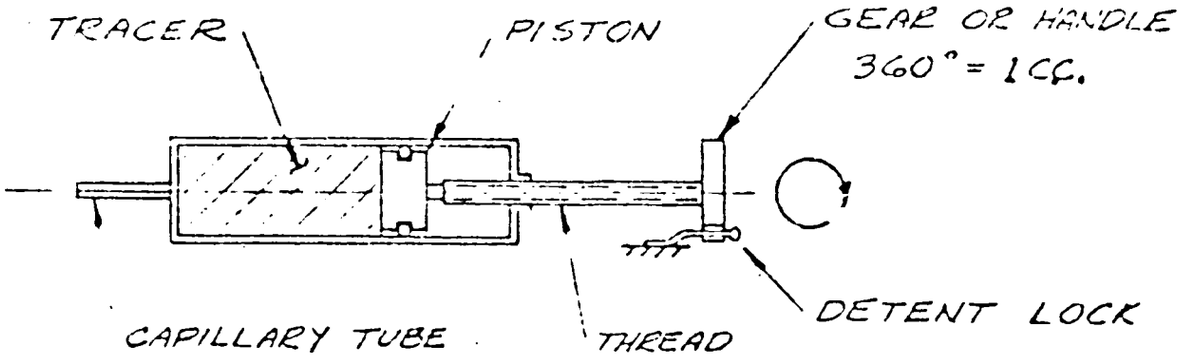

L1 - SCREW DRIVE

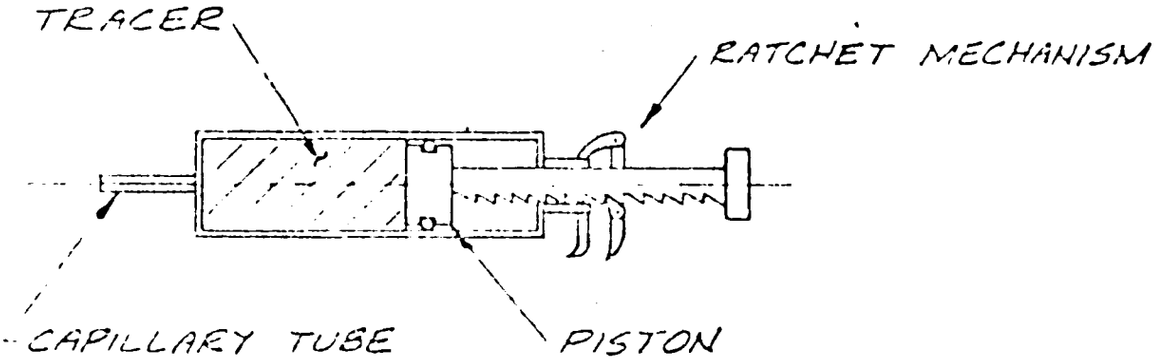

L2 - RATCHET DRIVE

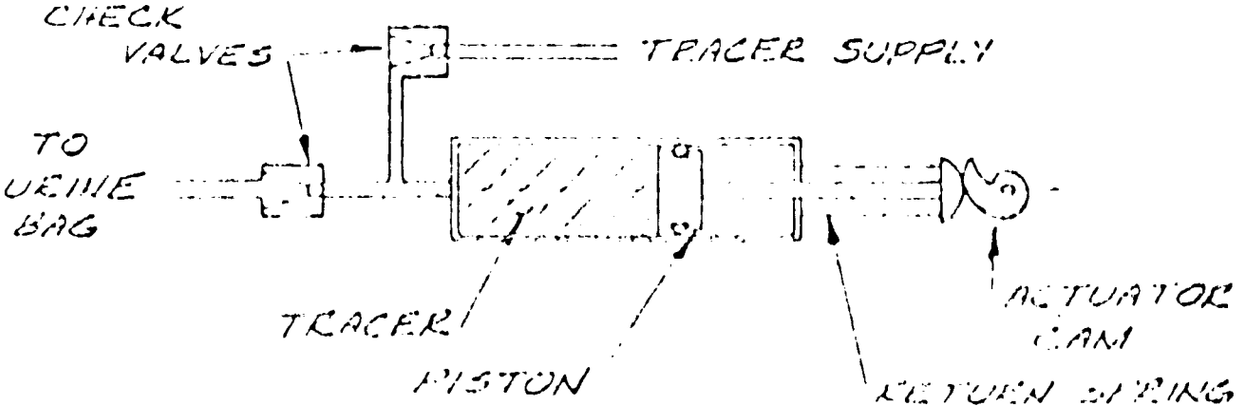

L3 - CAM DRIVE

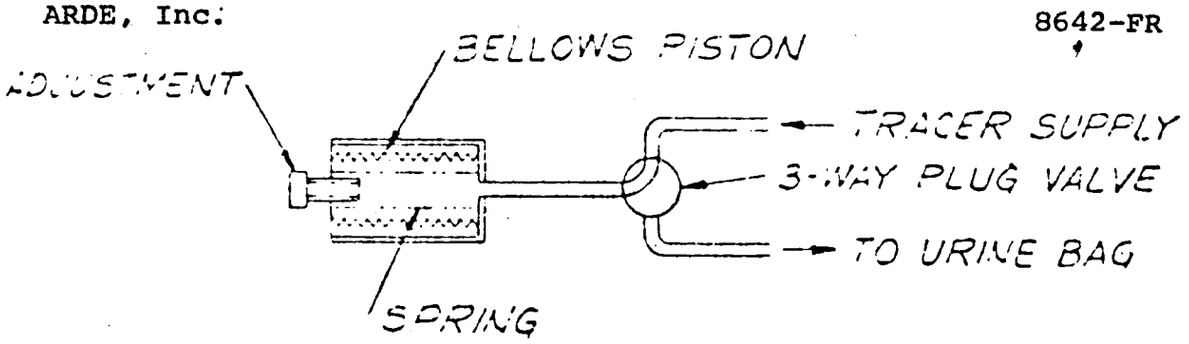

L4 - SPRING LOADED CAVITY

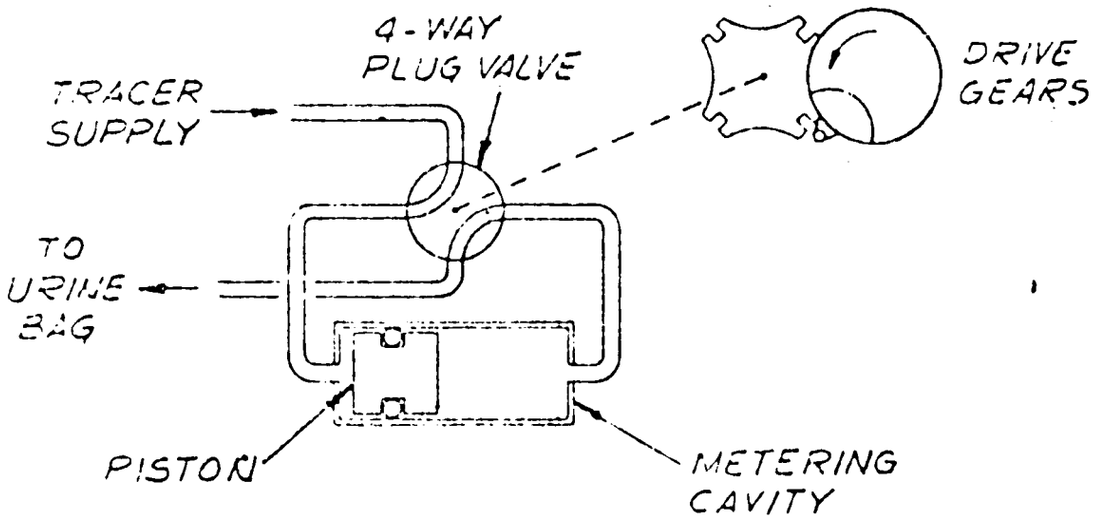

L5 - FLOATING PISTON

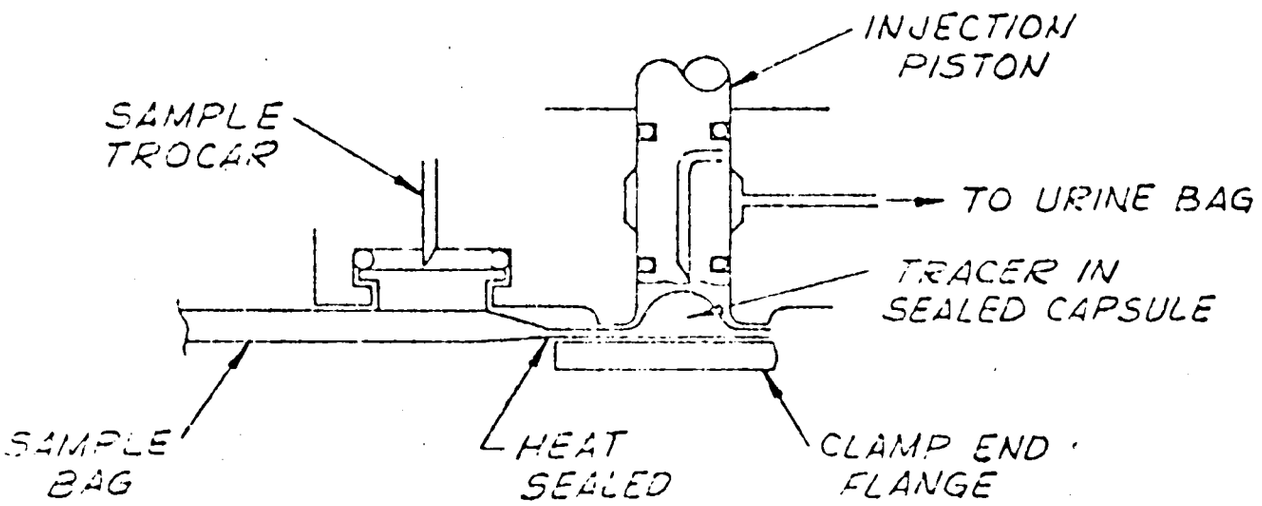

L6 - PISTON INJECTOR

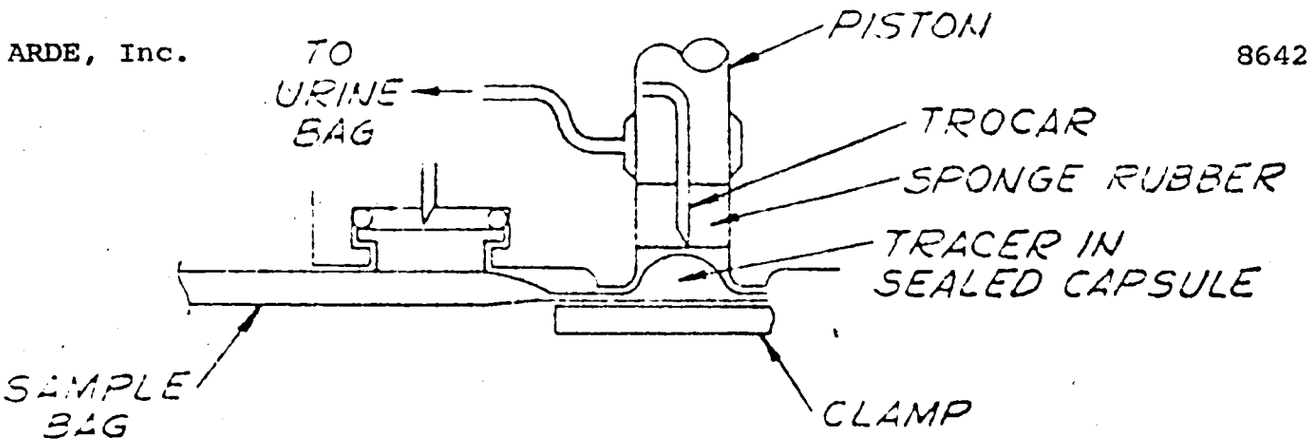

L7 - TROCAR INJECTOR

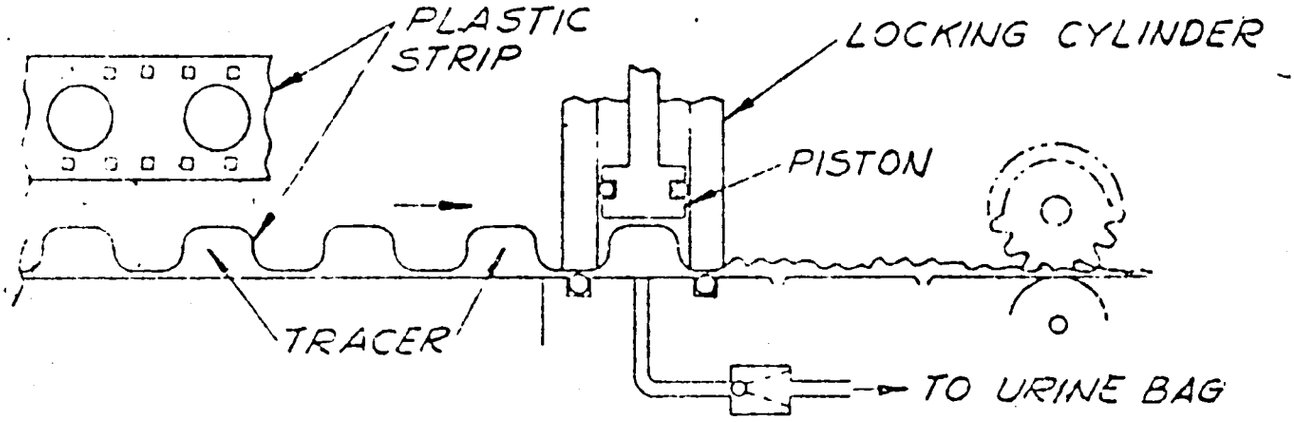

L8 - STRIP PACKAGED TRACER WITH PISTON INJECTOR

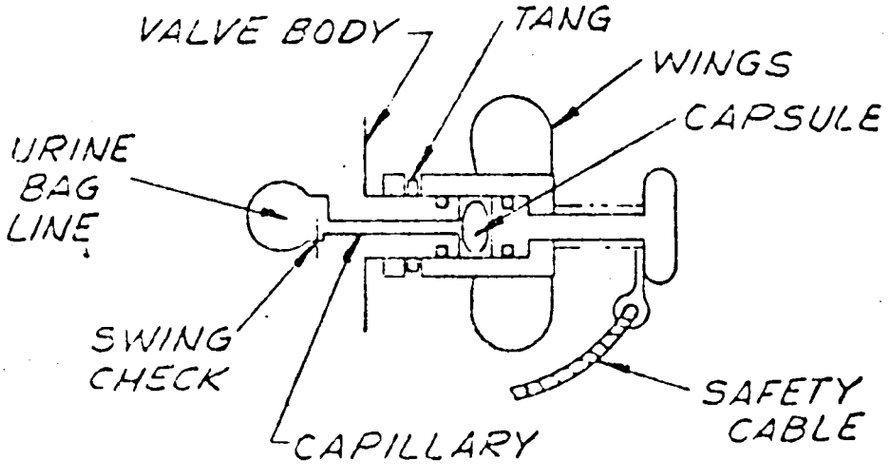

L9 - MANUAL CAPSULE INJECTOR

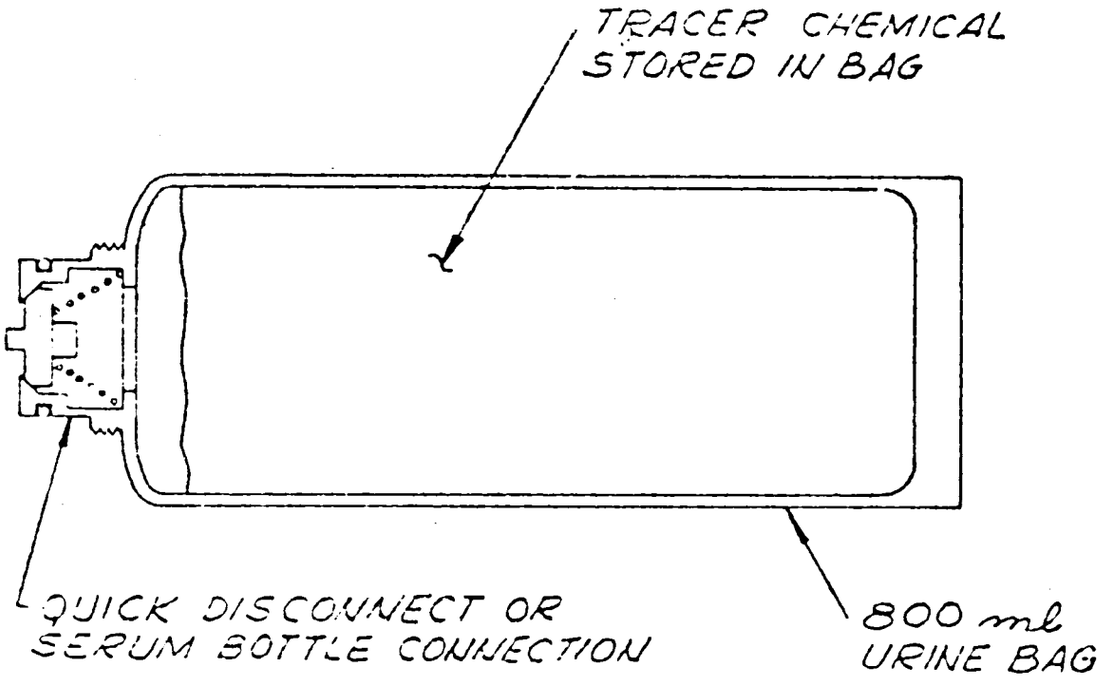

L10-DISPERSED IN DISPOSABLE URINE BAG

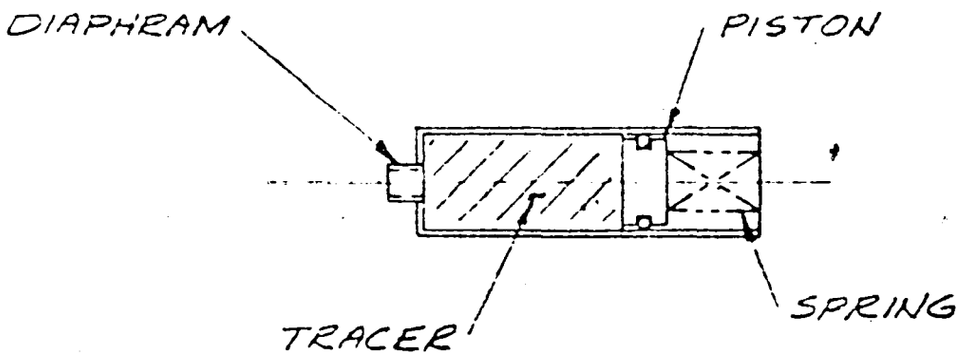

TS1 - SPRING LOADED

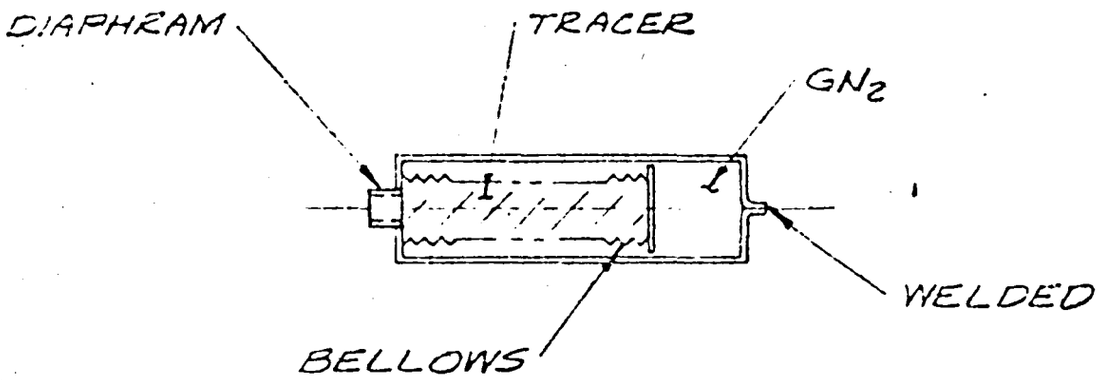

TS2 - BY GAS PRESSURE

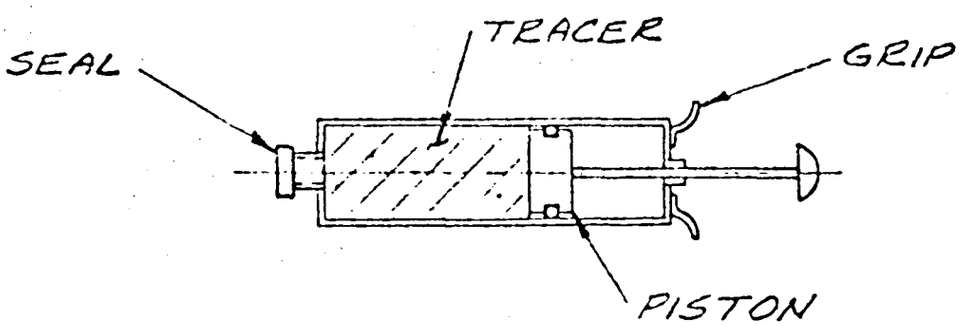

TS3 - BY SQUEEZING

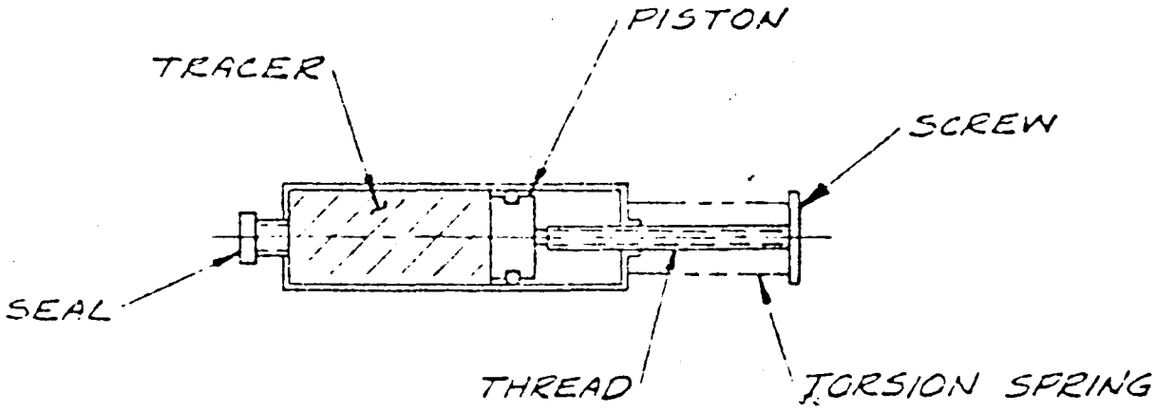

TS4 - WORM SCREW DRIVE

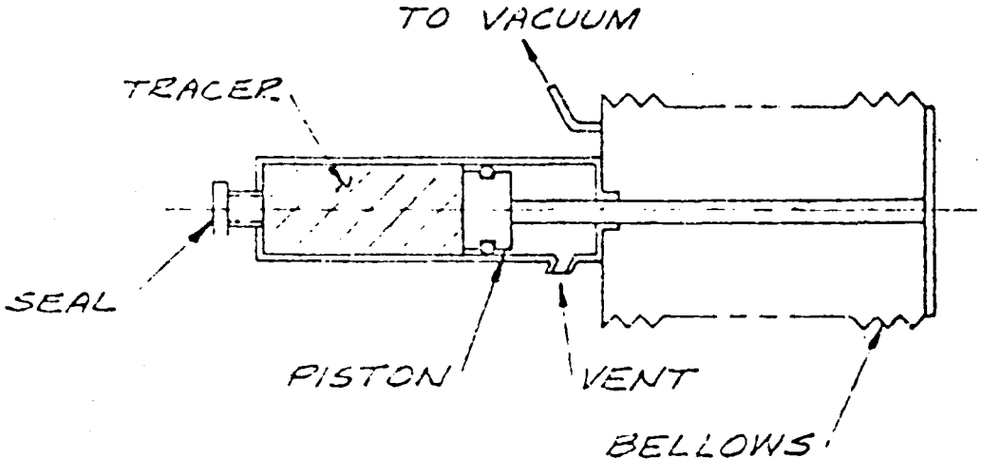

TS5 - VACUUM

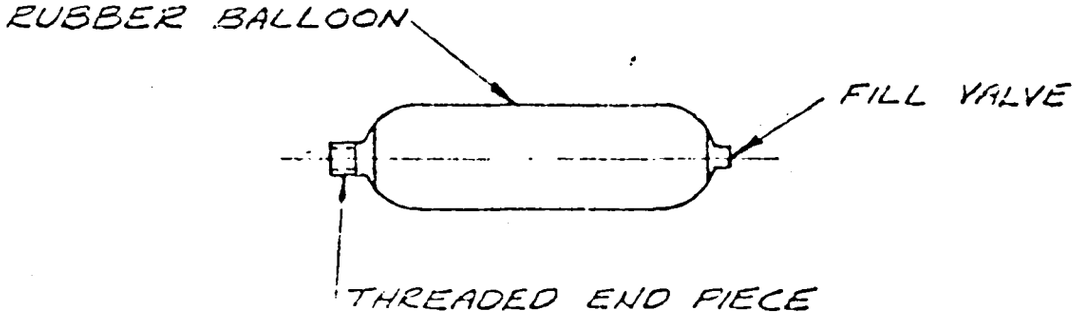

TS6 - BALLOON

APPENDIX B

Analysis of the Number of Cycles Required for Adequate Mixing When Using Tracer in Sample Bag (Reference System Types III and IV).

PRINCIPLES OF OPERATION

1. A total quantity of urine, A + B, is in the large container, A.
2. A quantity, B, is transferred to the small container, B, and mixed with a given amount of tracer material initially stored in this container. This is considered Condition 0. The large container represents the urine reservoir/mixing bag, and the small container represents the sample bag.
3. Quantity S is returned to Container A and mixed.
4. Quantity S is returned to B and mixed. This is Condition 1.
5. Steps 3 and 4 are repeated N times.

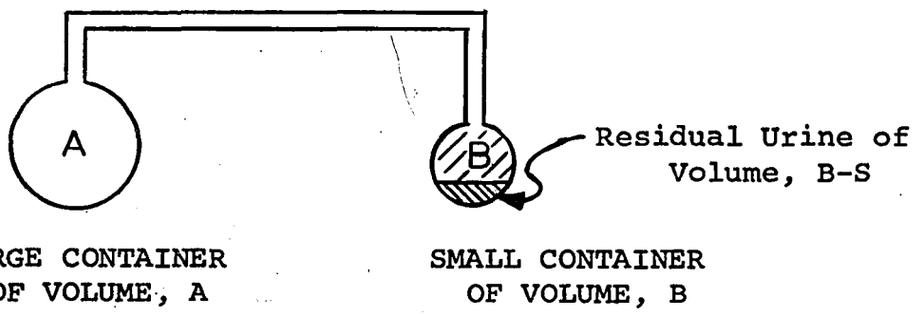

Let C = Concentration of tracer in large container

k = Concentration of tracer in small container

Subscript o indicate start of tracer mixing

Subscript 1 indicate first return of urine into B

Subscript N indicate Nth return of urine into B

k_f = Ideal concentration of urine in both containers

N = Number of times urine is returned to small container

S = Amount of urine transferred from small to large container.

Assume that $C_o = 0$ and that k_o is a given value.

ANALYSIS

1. At time 1, some amount of urine, S, with some amount of tracer present had been introduced into A and returned to B. The concentration of tracer in A at time 1 is therefore:

$$C_1 = \frac{S\,k_o}{A + S}$$

and the concentration in B is:

$$k_1 = \frac{k_o\,(B-S) + SC_1}{B}$$

2. $$k_1 - C_1 = k_o\left(\frac{B-S}{B}\right) + C_1\left(\frac{S}{B}\right) - C_1$$

$$= (k_o - C_1)\left(\frac{B-S}{B}\right)$$

$$= \left[k_o - k_o\left(\frac{S}{A+S}\right)\right]\left[\frac{B-S}{B}\right]$$

$$= k_o\left[\frac{A}{A+S}\right]\left[\frac{B-S}{B}\right]$$

3. $$k_f = \left(\frac{B}{A + B}\right) k_o$$

$$k_o = \left(\frac{A + B}{B}\right) k_f$$

4. $$\frac{k_N - C_N}{k_f} = \left(\frac{A + B}{B}\right) \left(\frac{A}{A + S}\right)^N \left(\frac{B - S}{B}\right)^N$$

$$= \left(\frac{A + B}{B}\right) \left[\frac{A}{A + S} \quad \frac{B - S}{B}\right]^N$$

APPENDIX C

ANALYSES OF CHEMICAL URINE VOLUME MEASUREMENT SYSTEM ALTERNATIVE PRELIMINARY DESIGNS

Certain characteristics that could be delineated and quantified have been tabulated for comparison purposes. These include the number of parts for each design approach, the specific sequence and number of operations, the estimated weight of each subsystem, the final volume of the various design approaches, and a system accuracy error analysis. All the parameters have been summarized in Table 12 in the main body of the report. This information was used as the main basis for system selection for Phases III and IV: detail design, fabrication, evaluation and test of prototype and flight qualified systems.

COMPARISON OF NUMBER OF PARTS FOR GEMINI UTS

Proposed Chemical Urine Volume Measuring Systems

SYSTEM TYPE I		SYSTEM TYPE II		SYSTEM TYPE III		SYSTEM TYPE IV		SYSTEM TYPE V		SYSTEM TYPE VI	
Element or Subassembly	No. of Parts	Element or Subassembly	No. of Parts	Element or Subassembly	No. of Parts	Element or Subassembly	No. of Parts	Element or Subassembly	No. of Parts	Element or Subassembly	No. of Parts
Housing	1	Housing	1	Housing	1	Housing	1	Housing	1	Housing	1
Syringe Valve	1	Syringe Valve	1	Syringe Valve	1	Syringe Valve	1	Syringe Valve	1	Syringe Valve	1
Detent Assembly	4	Detent Assembly	4	Detent Assembly	4	Detent Assembly	4	Detent Assembly	4	Detent Assembly	4
Knob, Selector	1	Knob, Selector	1	Knob, Selector	1	Knob, Selector	1	Knob, Selector	1	Knob, Selector	1
Cap	1	Cap	1			Cap	1				
Plug	1			Plug	1			Plug	1	Plug	1
Screws	4	Screws	14	Screws	2	Screws	12			Screws	4
Spring	1	Spring	1			Spring	1				
Pin, Spring	1	Pin, Spring	2	Pin, Spring	3	Pin, Spring	3	Pin, Spring	3	Pin, Spring	6
Seals, O-Ring	2	Seals, O-Ring	10	Seals, O-Ring	11	Seals, O-Ring	6	Seals, O-Ring	7	Seals, O-Ring	11
Bag, Urine	1	Bag, Urine	1	Bag, Urine	1	Bag, Urine	1	Bag, Urine	1	Bag, Urine	1
Attach.Urine Bag	1	Attach.Urine Bag	1	Attach.Urine Bag	1	Attach.Urine Bag	1	Attach.Urine Bag	1		
Seal, Urine Bag	1			Seal, Urine Bag	1			Seal, Urine Bag	1	Seal, Urine Bag	1
Clamp, Bag	1										
Lanyard, Clamp	1										
Pin, Safety	1	Pin, Safety	1	Pin, Safety	1	Pin, Safety	1	Pin, Safety	1	Pin, Safety	1
Pin, Locating	1			Pin, Locating	1			Pin, Locating	1	Pin, Locating	1
		Ring, Bag Attach.	1			Ring, Bag Attach.	1				
		Nipple	1	Nipple	1			Nipple	1	Nipple	1
		Cam Knob	1	Cam Knob	1	Cam Knob	1	Cam Knob	1	Cam Knob	1
		Sampling Syringe	1	Sampling Syringe	1	Sampling Syringe	1	Sampling Syringe	1	Sampling Syringe	1
		Pump	1	Pump	1					Pump	1
		Spring, Helical	3	Spring, Helical	3					Spring, Helical	3
		Piston Seal	2	Piston Seal	2					Piston Seal	3
		Ball, Check Valve	2	Ball, Check Valve	2					Ball, Check Valve	2
		Bag, Tracer Storage	1	Bag, Tracer Storage	1					Bag, Tracer Storage	1
		Container, Bag	1	Container, Bag	1					Container, Bag	1
		Sealant, Thread	-	Sealant, Thread	-	Sealant, Thread	-	Sealant, Thread	-	Sealant, Thread	-
		Plug, Tracer Line	1	Plug, Tracer Line	1						
				Seal, Syringe Valve	1			Seal, Syringe Valve	1	Seal, Syringe Valve	1
								Attach. Bag	1	Attach. Bag	1
										Piston Act.Spring	2
										Hsg.Pump Storage	1
										Piston Act.Lever	1
Total	24	Total	53	Total	44	Total	36	Total	29	Total	53

COMPARISON OF OPERATING STEPS FOR GEMINI UTS

Present UTS and Proposed Chemical Urine Volume Measurement Systems

PRESENT URINE TRANSPORT SYSTEM

1. Lift out urinal
2. Remove sample bag from storage
3. Attach sample bag
4. Remove urinal cap
5. Place urinal over penis
6. Inflate penis seal
7. Open urinal valve
8. Unstrap and pull out Bellows pump
9. Urinate
10. Close urinal valve
11. Compress Bellows
12. Estimate volume
13. Record data in log
14. Release Bellows
15. Introduce urine injector into sample bag
16. Compress Bellows filling sample bag
17. Release Bellows
18. Extract injector from sample bag
19. Open valve to overboard drain
20. Compress and latch Bellows
21. Close overboard valve
22. Remove sample bag
23. Store sample bag
24. Release pressure from penis seal
25. Remove urinal from penis
26. Wipe end of penis and inside of urinal
27. Recap urinal
28. Store UTS assembly

PROPOSED SYSTEM, TYPE I

1. Lift out urinal
2. Remove urine bag from storage
3. Attach urine bag to selector valve
4. Remove cap from urinal
5. Place urinal over penis
6. Inflate penis seal
7. Open urinal shut-off valve
8. Turn selector valve to "Urinate"
9. Urinate
10. Close urinal valve
11. Mix urine and tracer
12. Fill sample compartment
13. Clamp sample compartment(1)
14. Turn selector valve to "Blow-down"
15. Unstrap and pull out Bellows pump(2)
16. Open overboard drain valve
17. Compress and latch Bellows
18. Close overboard valve(2)
19. Deflate penis seal
20. Remove urinal from penis
21. Wipe end of penis and inside of urinal
22. Replace cap on urinal
23. Remove clamp from urine bag(3)
24. Remove urine bag from selector valve
25. Store sample in urine bag
26. Wipe injector needle(4)
27. Store urinal and selector valve assembly

NOTES

(1) Or twist closed
(2) May not be required
(3) Or untwist
(4) May not be required

PROPOSED SYSTEM, TYPE II

1. Lift out urinal
2. Uncoil mixing bag from around selector valve
3. Remove sample bag from storage
4. Attach sample bag to selector valve
5. Remove cap from urinal
6. Place urinal over penis
7. Inflate penis seal
8. Turn selector valve to "Urinate"
9. Open urinal shut-off valve
10. Urinate
11. Close urinal shut-off valve
12. Mix urine and tracer
13. Turn selector valve to "Sample"
14. Operate urine sample bag injector needle
15. Squeeze mixing bag to fill sample bag
16. Retract injector needle
17. Turn selector valve to "Blow-down"
18. Unstrap and pull out Bellows pump
19. Open overboard valve
20. Compress and latch Bellows
21. Close overboard valve
22. Deflate penis seal
23. Remove urinal from penis
24. Wipe end of penis and inside of urinal
25. Replace cap on urinal
26. Remove sample bag
27. Store sample bag
28. Wrap mixing bag around selector valve
29. Store urinal and selector valve assembly

PROPOSED SYSTEM, TYPE III

1. Lift out urinal
2. Remove mixing bag from storage
3. Attach mixing bag to selector valve
4. Remove sample bag from storage
5. Attach sample bag to selector valve
6. Remove cap from urinal
7. Place urinal over penis
8. Inflate penis seal
9. Turn selector valve to "Urinate"
10. Open urinal shut-off valve
11. Urinate
12. Close urinal shut-off valve
13. Mix urine and tracer
14. Turn selector valve to "Sample"
15. Operate urine sample bag injector needle
16. Squeeze mixing bag to fill sample bag
17. Retract injector needle
18. Turn selector valve to "Blow-down"
19. Unstrap and pull out Bellows pump
20. Open overboard valve
21. Compress and latch Bellows
22. Close overboard valve
23. Deflate penis seal
24. Remove urinal from penis
25. Wipe end of penis and inside of urinal
26. Replace cap on urinal
27. Remove sample bag
28. Store sample bag
29. Remove mixing bag and store for next use
30. Store urinal and selector valve assembly

COMPARISON OF OPERATING STEPS FOR GEMINI UTS

Present UTS and Proposed Chemical Urine Volume Measurement System.

PROPOSED SYSTEM, TYPE IV

1. Lift out urinal
2. Uncoil mixing bag from around selector valve
3. Remove sample bag from storage
4. Attach sample bag to selector valve
5. Remove cap from urinal
6. Place urinal over penis
7. Inflate penis seal
8. Turn selector valve to "Urinate"
9. Open urinal shut-off valve
10. Urinate
11. Close urinal shut-off valve
12. Turn selector valve to "Sample-Mix"
13. Operate urine sample bag injector needle
14. Squeeze mixing bag to fill sample bag
15. Knead sample bag to mix tracer
16. Squeeze sample bag to fill mixing bag
17. Knead mixing bag to mix tracer

18-29. REPEAT STEPS 14 THROUGH 17 THREE TIMES

30. Squeeze mixing bag to fill sample bag
31. Retract injector needle
32. Turn selector valve to "Blow-down"
33. Unstrap and pull out Bellows pump
34. Open overboard valve
35. Compress and latch Bellows
36. Close overboard valve
37. Deflate penis seal
38. Remove urinal from penis
39. Wipe end of penis and inside of urinal
40. Replace cap on urinal
41. Remove sample bag
42. Store sample bag
43. Wrap mixing bag around selector valve
44. Store urinal and selector valve assembly

PROPOSED SYSTEM, TYPE V

1. Lift out urinal
2. Remove mixing bag from storage
3. Attach mixing bag to selector valve
4. Remove sample bag from storage
5. Attach sample bag to selector valve
6. Remove cap from urinal
7. Place urinal over penis
8. Inflate penis seal
9. Turn selector valve to "Urinate"
10. Open urinal shut-off valve
11. Urinate
12. Close urinal shut-off valve
13. Turn selector valve to "Sample-Mix"
14. Operate urine sample bag injector needle
15. Squeeze mixing bag to fill sample bag
16. Knead sample bag to mix tracer
17. Squeeze sample bag to fill mixing bag
18. Knead mixing bag to mix tracer

19-30. REPEAT STEPS 15 THROUGH 18 THREE TIMES

31. Squeeze mixing bag to fill sample bag
32. Retract injector needle
33. Turn selector valve to "Blow-down"
34. Unstrap and pull out Bellows pump
35. Open overboard valve
36. Compress and latch Bellows
37. Close overboard valve
38. Deflate penis seal
39. Remove urinal from penis
40. Wipe end of penis and inside of urinal
41. Replace cap on urinal
42. Remove sample bag
43. Store sample bag
44. Remove mixing bag and store for next use
45. Store urinal and selector valve assembly

PROPOSED SYSTEM, TYPE VI

1. Lift out urinal
2. Remove mixing bag from storage
3. Attach mixing bag to selector valve.
4. Remove sample bag from storage
5. Attach sample bag to selector valve
6. Remove cap from urinal
7. Place urinal over penis
8. Inflate penis seal
9. Turn selector valve to "Urinate"
10. Open urinal shut-off valve
11. Urinate
12. Close urinal shut-off valve
13. Mix urine and tracer
14. Turn selector valve to "Sample"
15. Operate urine sample bag injector needle
16. Squeeze mixing bag to fill sample bag
17. Retract injector needle
18. Turn selector valve to "Blow-down"
19. Unstrap and pull out Bellows pump
20. Open overboard valve
21. Compress and latch Bellows
22. Close overboard valve
23. Deflate penis seal
24. Remove urinal from penis
25. Wipe end of penis and inside of urinal
26. Replace cap on urinal
27. Remove sample bag
28. Store sample bag
29. Remove mixing bag and store for next use
30. Store urinal and selector valve assembly

WEIGHT AND VOLUME COMPARISON

WEIGHT IN POUNDS	TYPE I SKD-1771	TYPE II SKD-1772	TYPE III SKD-1773	TYPE IV SKD-1774	TYPE V SKD-1775	TYPE VI SKD-1776
VALVE	.476	1.039	1.065	.644	.754	.815
BAG - MIXING	11.332	.074	.172	.074	.172	.918
BAG - SAMPLE		3.58	3.58	3.712	3.712	3.58
TOTAL SYSTEM	11.808	4.693	4.817	4.430	4.638	5.313
PRESENT SAMPLE BAG	← 3.58 →					
VOLUME IN CUBIC INCHES						
VALVE	10.9_i	18.8_i	18.8_i	13.3_i	13.3_i	13.3_i
BAG-MIXING (2)	$457._e$		7.42_e		7.42_e	16.90_e
BAG-SAMPLE		$133._e$	$133._e$	$137._e$	$137._e$	$133._e$
TOTAL SYSTEM VOLUME	467.9	151.8	159.22	150.3	157.72	163.20
PRESENT SAMPLE BAG	← $133._e$ →					

i - internal storage

e - external storage

SOURCE OF ERROR	HOLD-UP VOLUMES HALF FULL						HOLD-UP VOLUMES FULL						HOLD-UP VOLUMES EMPTY					
	TYPE I SKD-1771	TYPE II SKD-1772	TYPE III SKD-1773	TYPE IV SKD-1774	TYPE V SKD-1775	TYPE VI SKD-1776	TYPE I SKD-1771	TYPE II SKD-1772	TYPE III SKD-1773	TYPE IV SKD-1774	TYPE V SKD-1775	TYPE VI SKD-1776	TYPE I SKD-1771	TYPE II SKD-1772	TYPE III SKD-1773	TYPE IV SKD-1774	TYPE V SKD-1775	TYPE VI SKD-1776
1. Volume of Urine Held Up Within Whirlpool's Urinal and Valve. This is outside ARDE's Current Responsibility.	±2.44	2.44	2.44	2.44	2.44	2.44	--	--	--	--	--	--	--	--	--	--	--	--
2. Volume of Urine in Inlet Line	.43	.44	.45	.44	.45	.44	--	--	--	--	--	--	--	--	--	--	--	--
3. Hold-up Within Selector Valve Plug	.21	.29	.32	.29	.32	.32	--	--	--	--	--	--	--	--	--	--	--	--
4. Hold-up Between Mixing Bag and Sample Bag	--	.43	.57	.43	.57	.57	--	.43	.57	.43	.57	.57	--	--	--	--	--	--
5. Hold-up in Mixing Bag	--	.05	.29	.05	.29	.47	--	.05	.29	.05	.29	.47	--	--	--	--	--	--
6. Mixing of Tracer Chem. and Urine	.05	.05	.05	.05	.05	.05	.05	.05	.05	.05	.05	.05	.05	.05	.05	.05	.05	.05
7. Tracer Chem. Mechanical Injection Ground Based ± .1% Mechanism Flight Hardware ±1.0%	.10	1.00	1.00	.10	.10	1.00	.10	1.00	1.00	.10	.10	1.00	.10	1.00	1.00	.10	.10	1.00
8. Spec. Vol. Change Due to Temperature Variations of Tracer Chem.	--	.44	.44	--	--	.44	--	.44	.44	--	--	.44	--	.44	.44	--	---	.44
9. Total % Error from Mechanical Sources	.79	2.70	3.12	1.36	1.76	3.29	.15	1.97	2.35	.63	1.01	2.53	.15	1.49	1.49	.15	.15	1.49
10. Chemical Analysis Error	1.00	1.00	1.00	1.00	1.00	1.00	1.00	1.00	1.00	1.00	1.00	1.00	1.00	1.00	1.00	1.00	1.00	1.00
11. Total Error Attributable to ARDE 150 c.c. minimum micturition	1.79	3.70	4.12	2.36	2.78	4.29	1.15	2.97	3.35	1.63	2.01	3.53	1.15	2.49	2.49	1.15	1.15	2.49
12. Total % Error from Mechanical Sources for a 300 c.c. Avg. Urination Plus Chemical Analysis Error	1.47	3.32	3.59	1.98	2.25	3.67	1.15	2.95	3.20	1.61	1.86	3.30	1.15	2.49	2.49	1.15	1.15	2.49
Urinal Error for 300 c.c.	1.22	1.22	1.22	1.22	1.22	1.22	--	--	--	--	--	--	--	--	--	--	--	--
13. Total % Error from Mechanical Sources for a 600 c.c. Maximum Urination Plus Chemical Analysis Error	1.31	3.13	3.43	1.79	1.99	3.36	1.15	2.94	3.13	1.60	1.79	3.18	1.15	2.49	2.49	1.15	1.15	2.49
Urinal Error for 600 c.c.	.61	.61	.61	.61	.61	.61	--	--	--	--	--	--	--	--	--	--	--	--
The Total Values in Columns Marked "X" Tend to be High Because the Errors are not Necessarily Additive. Therefore, These are Absolute Maximum Values.		X	X	X	X	X		X	X	X	X	X						

APPENDIX D

COLLECTION/MIXING BAG DRAINAGE TESTS

INTRODUCTION

One of the important parameters affecting the accuracy of the Urine Volume Measurement System is the amount of residue left in the collection/mixing bag. The effect of this residue may vary over a wide range, the magnitude depending on the difference in volumes between a given micturition and the following one, and also whether the subsequent volume is larger or samller than the previous collection.

During Phase IV of the program, when Pre-Delivery Acceptance Tests were being performed on the CUVMS flight hardware, it was observed that the over-all accuracy of the system had been impaired by the substitution of the screw-type connector, side opening collection/mixing bag for the top opening, bayonet connector type bag. This later configuration had originally been intended for flight use.

The top opening bag had consistently retained approximately 1 to 2 ml of fluid, and residue tests under the same operating conditions (4 inches Hg maximum, 30 seconds drainage time) resulted in residues ranging from 6 to 9 ml with the new bag.

Calculations were made to estimate the effect of the residue on

volume measurement accuracy. These calculations were based on an assumed worst case condition of 10 ml system residue, and are summarized below.

Previous Micturition Volume, ml	Subsequent Micturition Volume, ml	Per Cent Error
100 ml	500 ml	-7.2%
500	100	+7.9
100	250	-5.4
250	500	-1.9
500	250	+2.0
250	100	+5.8
100	600	-7.6
600	100	+8.2
300	400	-0.8
400	300	+0.8

It is obvious that tracered urine holdup in the system must be kept to the absolute minimum, and as described in the body of this report, the residue was 1 to 2 ml in the original flight type collection/mixing bag, and increased to 6 to 9 ml for the new side opening, screw connection type under standardized operating conditions.

To minimize residue in the new collection/mixing bag, and insure over-all system accuracy, a test study was instituted to determine the best method of reliably and consistently reducing the

residual fluid remaining after the "Dump" operation. Tests using the original collection/mixing bag had shown that the CUVMS volume measuring accuracy could be maintained with the ± 5% specification accuracy with bag residues below 4 ml. The results of the experiments performed to maintain this accuracy with the new bag are summarized below.

TEST PROCEDURES

Tests were run by filling a screw connector collection bag with 600 ml of water through a selector valve. The valve handle was placed in the "Urinate" position for filling and the "Dump" position for evacuation. Three bags were used, one supplied by NASA, and two bags fabricated by ARDE. Evacuation time was 40 seconds in all trials with 4 inches Hg suction applied to the collection bag, except where otherwise noted.

Previous tests were performed with collection bags containing a silicone rubber-fiberglass tube. This tubing was removed and various other tubes and configurations were tried in an attempt to prevent the bag from collapsing tight against the attachment fittings and restricting fluid flow during the "Dump" operation. (See drawing E 3387, Item 6, Page 122, for location of the inserts used in these tests.) The tests were run (unless otherwise noted) with the bag hanging vertically, so that a few inches of water head had to be overcome to drain the bag. Those tests performed with the bag supported in a horizontal position were run to simulate the less stringent condition to be encountered in a zero g environment.

1. A strip of Velcro (hooked portion) was inserted 1/4" wide x full length of bag.
   Results: 15-25 ml residual; 4 runs

2. Braided nylon - 3 strands (.050 thk.)
   Results: 8-10 ml residual; 2 runs

3. Braided nylon - 6 strands (.050 thk.)
   Results: 8-9 ml residual; 2 runs

4. Teflon tube - 1/8 I.D. x .030 wall
   Results: 17 ml residual; 1 run

5. One-half of Teflon tubing (cut axially)
   Results: 15-21 ml residual; 2 runs

6. Aluminum tube (2" lg. x 1/4" dia.) - to prevent collapse of bag, plus silicone rubber fiberglass tube
   Results: 11 ml residual; 2 runs

7. Aluminum tube (2" lg. x 1/4" dia.) - no rubber tubing
   Results: 11-14 ml residual; 2 runs

8. Nylon rod (.050 dia.) - placed around edges of bag to keep edges from collapsing
   Results: 8-1/2 ml residual; 1 run

9. Nylon matting (Trilock) inserted in bag
   Results: 8-1/2 ml residual; 1 run, fibers unraveled.

10. Aluminum tube (2" lg. x 1/4" dia.) with nylon rod (.050 dia.) inside tubing
    Results: 8 ml residual; 2 runs

11. Velcro at neck of bag plus silicone rubber fiberglass tubing
    Results: 8 ml residual; 2 runs

12. Used ARDE Bag No. 2 - no tubing - milled slots (.030 wide x .050 deep) in internal fitting - 8 slots
    Results: 4 ml residual; 4 runs

13. Repeat item 12 above with bag horizontal
    Results: 2-3 ml residual; 4 runs

14. Used ARDE Bag No. 1 with slots extended across the edges of the fitting
    Results: 4-6 ml residual; 3 runs bag horizontal

15. Repeat item 14 above with bag vertical
    Results: 10-11 ml residual; 3 runs

16. Teflon tube - 1/8" I.D. with 1/64" dia. holes staggered 90° at one inch intervals; Tube extended full length of bag with tube end open
    Results: 12.5-17.3 ml residual; 2 runs

17. Repeat item 16 above with tube end closed
    Results: 9.0-10.0 ml residual; 2 runs

18. Collection bag held vertically without any type of insert or tubing; bag was repeatedly drained with various vacuums applied

    Results: 4" Hg, 40 sec. - 9.5-10.5 ml residual; 3 runs

    5" Hg, 10 sec., 6" Hg, 30 sec. - 5.5-7.0 ml residual; 2 runs

    5" Hg, 10 sec., 8" Hg, 30 sec. - 5.5-6.0 ml residual; 2 runs

    5" Hg, 8 sec., 10" Hg, 32 sec. - 3.0-3.5 ml residual; 2 runs

19. Bag was held horizontally - no inserts

    Results: 3.5-6.0 ml residual; 3 runs

20. Bag was held horizontally and rolled up the last 20 seconds of the 40 second drain period

    Results: 2.1-4.1 ml residual; 8 runs

CONCLUSION

Best results were obtained when using a collection bag with milled radial slots in the internal fitting, combined with rolling the bag for the last 20 seconds of the 40 second drain period. This configuration and procedure were recommended to NASA for fabrication of the collection/mixing bags, and for use during the actual mission.

APPENDIX E

TRACER STORAGE ACCUMULATOR FRONT SEAL TESTS

1.0 OBJECT

To achieve a reliable front end seal that would retain fluid after exposure to the following conditions:

a. Withstand temperature from 0°F to 200°F with 2 hour soaks at each extreme.

b. Remain compatible with a solution of 50% propylene glycol - 50% water.

c. Maintain seal integrity after having the valve probe inserted for a 14 day period and then withdrawn.

2.0 CONCLUSION

The material selected was a silicone rubber per MIL-R-5847D Class II Grade 40 as being best suited to meet the aforementioned design criteria within the limits imposed by the geometrical configuration of the accumulator, without change in accumulator design.

3.0 TEST PROCEDURE

The basic technique was a qualitative approach in which all the test samples were compared in the same environment. Since the original design concept was predicated on using two (2)

1/16 thick by .250" dia. rubber discs retained in place by a hollow threaded screw, all the test samples were punched discs .250" diameter. Each disc was slit .060" long at its center without removing any material and pushed onto a 1/16 dia. stainless steel pin which simulated the selector valve upstream check valve probe. A centering tool was made to precisely center the slit to avoid eccentricities and thereby prevent the check valve probe from mutilating or enlarging the slit when the accumulator was being threaded onto the valve body. A hot plate was used to maintain tracer solution at the required temperature, while a deep chest was used for the cold soak. After alternating trying the various samples in the thermal environment, the discs were removed from the pins and examined visually (7 x enlargement) for signs of compression set as would be evidenced by pin holes.

The most promising samples were selected for long term compression set testing by using actual accumulators and pressurizing the belloframs to approximately 20 psi and then inserting the probe simulators. These probes were removed periodically to determine if and when the seals would leak.

The following materials were investigated.

a. Buna-N - 1/8" thick, 45 durometer, No. MR 40 (Mechanical Rubber Products Co.)

b. Neoprene - 1/8" thick, 40 durometer (Mechanical Rubber Products Co.)

c. Natural Rubber (Modified) - No. 12, Grey, 1/16" thick (The West Co.)

d. Ethylene Propylene Terpolymer (EPT): 1/16" thick 55 durometer, No. 25020 (Stalwart Rubber Co.)

e. Viton: 1/16" thick, 70 durometer.

f. Silicone Rubber: 1/8" and 1/16" thick, No. 9711 (Dow Corning Co.).

5/32" thick, No. 1030 (Detroit Silicone Rubber Co.)

1/16" and 1/8" thick, MIL-R-5847D Class II, Grade 40

It will be noted that the first group of tests described below were much more severe than necessary, but were indicative of expected results when the temperature limits were more carefully controlled. This was corroborated by the subsequent testing.

3.1 Two samples each of 1/8" and 1/16" thick Buna-N, 1/16" thick No. 9711 Silicone, and 1/8" thick MIL-R-5847D Silicone were immersed in a 50% glycol solution for 69-1/2 hours at approximately 200°F.

Results: Buna-N split; No. 9711 Silicone approximately 1/16" dia. hole; MIL-R-5847 small hole.

3.2 Two samples each as in test 3.1 were placed in an electric oven for 63 hours at 280°F.

Results: Buna-N split; No. 9711 silicone small hole; MIL-R-5847 pin hole.

3.3 Samples of 1/8" and 1/16" thick No. 9711 silicone, 1/8" thick MIL-R-5847, and 1/16" thick EPT were immersed in a 50% glycol solution for 1-1/2 hours at 295°F.

Results: 1/8" thick No. 9711 silicone - small hole, 1/16" thick No. 9711 silicone - (2) samples pin hole, (1) sample O.K. MIL-R-5847 silicone - 1 sample pin hole, 1 sample O.K. EPT - (3) samples small hole.

3.4 Four samples of 1/16" thick EPT were immersed in a 50% glycol solution for 18 hours at approximately 200°F.

Results: Small hole in each part.

3.5 Two samples each of 1/8" and 1/16" thick Buna-N were immersed in a 50% glycol solution at 294°F.

Results: All samples split in a few minutes.

3.6 Four samples of 1/16" thick EPT were placed in an oven for 17 hours at 280°F.

Results: Small hole in all samples.

3.7 The following samples were placed on a probe and kept at ambient room temperatures (65°F-75°F) for 38 days.

Results: 1/16" and 1/8" thick No. 9711 silicone - small hole; 1/16" and 1/8" thick Buna-N - small hole; 1/16" thick EP - small hole; 5/32" thick No. 1030 silicone - pin hole; 1/8" thick MIL-R-5847 - no holes.

3.8 Samples immersed in 50% glycol solution for 18 hours at 190°F.

Results: 1/16" thick No. 9711 silicone: no holes
1/8" thick MIL-R-5847 silicone: no holes
1/8" thick EPT: 1/16" dia. hole

3.9 Sample immersed in 50% glycol solution for 16-1/2 hours at 190°F.

Results: 5/32" thick No. 1030 silicone: 1 sample pin hole, 2 samples no hole.

3.10 Samples were placed in accumulator housings and held in place with the normal retaining screw. No Belloframs were used. Probes were inserted in the seals and the entire component was subjected to 4 hours in a 50% glycol solution at 208°F, 16 hours at 0°F, and an additional 6 hours in solution at 200°F.

Results: 1/16" thick No. 9711 silicone: slight pin hole.
1/8" thick MIL-R-5847D silicone: no holes.

3.11 Two accumulators were assembled using 1/8" thick MIL-R-5847D silicone seals, and Belloframs. The units were filled with 50% glycol solution, probes were inserted and the units were allowed to stand at room ambient temperatures (65°F-75°F). The probes were removed after 65 hours.

Results: No leakage under full pressure.

Probes were reinserted and withdrawn after another 9 days and 20 hours.

Results: Slight leakage, however the seal adjusting screw was tightened and the leakage reduced to zero.

3.12 Four samples of 1/6" thick No. 12 grey natural rubber were immersed in a 50% glycol solution for 3 hours at 200°F and then exposed to 0°F for 4 hours.

Results: All samples developed a 1/16" dia. hole.

3.13 Two samples each of different materials were immersed in a 50% glycol solution for 2-1/2 hours at 200°F and then exposed to 0°F for 2-1/2 hours.

Results: Viton - split; Neoprene - large hole.

3.14 Three accumulators were prepared for testing long term seal integrity. All units were assembled with Belloframs and filled with a 50% glycol solution. Probes were inserted and the units were allowed to stand at room ambient temperatures (65°F-75°F). To check for leakage, the probes were removed periodically and pressure applied manually to the Bellofram. One sample used a single 1/8" thick seal, the second used two 1/16" thick seals, and the third a chamfered retaining screw.

Results:

Sample 1	Sample 2	Sample 3
Seal: 1/8" thick MIL-R-5847 Std. retaining screw	Seal: 1/8" thick MIL-R-5847 Chamfered retaining screw	Seal: 2-1/16" thick MIL-R-5847 Std. retaining screw
2 days, 21-1/2 hrs. no leak	2 days, 21-1/2 hrs. no leak	2 days, 21-1/2 hrs. no leak
3 days, 22-1/2 hrs. slight leak	3 days, 21-1/2 hrs. no leak	3 days, 21-1/2 hrs. no leak
New Test	4 days, 22 hrs. no leak	4 days, 22 hrs. no leak
22-1/2 hrs. no leak	7 days, 6 hours no leak	7 days, 6 hrs. no leak
3 days, 5 hrs. no leak	10 days, 7 hrs. no leak	10 days, 7 hrs. no leak
6 days, 7 hrs. no leak	13 days no leak	13 days no leak
9 days no leak	14 days no leak	13 days, 6 hrs. no leak
9 days, 4-1/2 hrs. no leak		

APPENDIX F

CUVMS OPERATING PROCEDURES

1.0 Introduction, Chemical Urine Volume Measuring System:

1.1 Scope. The Gemini Chemical Urine Volume Measuring System (CUVMS) is designed for total management of the crewmen's urinary output, from suiting up to reentry. The detailed functions and capabilities of the present system are:

1.1.1 To remove urine from the launch day Urine Collection Device (UCD), P/N 9557-3-112-2, after attaining orbit.

1.1.2 To receive the crewmen's urine and transport it to a storage location in orbit, prior to venting it overboard.

1.1.3 To take samples of every urination.

1.1.4 To provide a means of determining the total volume of each urination by a postflight analysis of the sample of that urination.

1.2 Description: The Gemini Chemical Urine Volume Measuring System is designed to use a tracer dilution technique for the determination of the volume of urine voided by a crewman and to collect samples of the urine for postflight volume determination and chemical analysis.

1.2.1 CUVMS total assembly, P/N EC30100, consists of the following components:

1.2.1.1 Selector Valve, P/N E3380: Has four flow positions labeled "Urinate", "Sample", "Dump", and "By-Pass".

These flow positions are selected by rotation of a handle attached to a multi-ported center plug. The selector valve assembly includes a positive displacement tracer metering pump which is activated by the handle when it passes over a plunger between the "By-pass" and "Urinate" positions. Mounted directly to the selector valve is a short piece of flexible hose, P/N EC30110, terminated by a quick disconnect nipple fitting, MAC P/N 52-83708-117. This outlet hose assembly is the interface between the CUVMS and the spacecraft mounted urine hose assembly required to vent the urine overboard from the mixing bag.

1.2.1.2 Mixing Bag, P/N E3387: Holds up to 800 ml of urine which passes into the bag during micturition when the selector valve is in the "Urinate" position. The collection bag is attached to the bottom of the selector valve by means of a screw thread connector.

1.2.1.3 Tracer Storage Accumulator, P/N C3424: Contains 20 ml (nominal) of tracer solution. This component consists of a spring actuated piston providing approximately 16 psig initial pressure applied to a Bellofram reservoir. The accumulator housing is screwed into the selector valve body prior to system use, at which time a seal is pierced and the tracer solution exposed to the interior of the tracer metering pump passages.

1.2.2 Associated Equipment:

1.2.2.1 CUVMS Roll-on Urine Receiver, P/N EC30108: Is the interface between the crewman and the CUVMS. An air and liquid-tight seal is obtained by means of a rubber cuff which can be rolled on and off of the penis. The receiver also contains a check valve to prevent back flow of the urine and a wire mesh screen filter.

1.2.2.2 Urine Hose Assembly, MAC P/N 52-83815-1: Consists of a section of flexible hose with a coupler quick disconnect fitting on each end. This assembly provides a means of connecting the quick disconnect of the CUVMS (nipple) to the spacecraft bulkhead quick disconnect fitting (nipple) for venting urine overboard from the mixing bag.

1.2.2.3 Urine Sample Bag, P/N 9557-3-485: Is constructed of a plastic laminate material. It is used for the purpose of obtaining a sample of every urination from the CUVMS. This is accomplished by means of a valve on the sample bag which mates with the sampler port of the CUVMS selector valve.

1.2.2.4 Launch-Day Urine Collection Device, P/N 9557-3-112-2: Is worn inside of the crewman's suit to collect all urine voided from the time of suiting up until orbit is attained. Once orbit is attained, it is removed and drained through the CUVMS.

2.0 Operating Procedures of Chemical Urine Volume Measuring System (CUVMS

2.1 Draining of Urine Collection Device (UCD):

NOTE: See Whirlpool Corporation, System Division, Instructions 9557-6002, for operation of UCD.

2.1.1 Remove selector valve and mixing bag from launch storage location and screw the mixing bag onto the selector valve.

NOTE: The selector valve handle should be in the "Dump" position and the sample probe lever in the "Off" or retracted position.

2.1.2 Remove urine hose assembly, MAC P/N 52-83815-1, from launch storage location and attach to spacecraft bulkhead quick disconnect fitting (nipple).

2.1.3 Remove UCD from suit. (see 9557-6002).

2.1.4 Place UCD drain connector over triangular sampler flange of the selector valve and turn UCD drain connector collar 1/6 turn to stop position.

2.1.5 Rotate selector valve handle counter-clockwise to the "Sample" position.

<u>CAUTION</u>: Counter-clockwise is opposite of the direction indicated by the arrow on the selector valve handle.

2.1.6 Rotate sample probe lever clockwise, push in and continue rotation to the stop to insert the sample probe through the rubber stopper of the UCD drain connector.

2.1.7 Squeeze the UCD to transfer the urine into the mixing bag.

2.1.8 When the UCD is empty (or 800 ml of urine has been transfered), rotate the sample probe lever counter-clockwise, pull out and continue rotation to the "Off" or retracted position and release the UCD.

2.1.9 Remove the UCD from sampler flange and place in reentry storage location.

<u>NOTE</u>: Do not place UCD in reentry storage location unless it is completely emptied in step 2.1.8.

2.1.10 Obtain urine sample bag from storage location.

2.1.11 Mark sample bag tag with required identification (C or CP, UCD and mission elapsed time).

2.1.12 Place sample bag collar over sampler flange of the selector valve and turn collar 1/6 turn to stop position.

2.1.13 Roll up mixing bag to force urine into the area of the bag adjacent to the selector valve connector.

NOTE: Keep mixing bag rolled up through first part of step 2.1.16.

2.1.14 Rotate sample probe lever clockwise, push in and continue rotation to the stop to insert the sample probe through the rubber stopper and into the sample bag.

2.1.15 Squeeze the mixing bag to transfer approximately 75 ml of urine into the sample bag.

2.1.16 When sample bag is full, rotate the sample probe lever counter-clockwise, pull out and continue rotation to the "Off" or retracted position and release the mixing bag.

2.1.17 Remove the filled sample bag from the selector valve and stow bag in storage location.

2.1.18 Rotate selector valve handle 90° clockwise (direction indicated by arrow on handle) to the "Dump" position.

2.1.19 Connect quick disconnect of the CUVMS (nipple) to fitting on the urine hose assembly (coupler).

2.1.20 Operate spacecraft urine overboard dump system.

NOTE: Mixing bag will drain automatically. Vacuum should be applied to the mixing bag for at least 40 seconds to insure minimum ullage.

2.1.21 Rotate selector valve handle 90° clockwise to the "By-pass" position.

NOTE: This will allow oxygen to flow through the urine dump lines and clear them out.

2.1.22 Turn off the spacecraft urine overboard dump system.

2.1.23 Break the quick disconnect at the outlet of the CUVMS.

NOTE: If UCD contains more than 800 ml of urine initially, return to step 2.1.4 after completing this step and repeat steps 2.1.4 thru 2.1.9 and 2.1.18 thru 2.1.23.

2.1.24 Stow the CUVMS.

NOTE: The second crewman to drain his UCD should start with step 2.1.3. Step 2.1.24 can be omitted by the first crewman if the second crewman is prepared to drain his UCD immediately following first crewman's completion of his UCD drain.

2.2 First Urination in Orbit

2.2.1 Obtain CUVMS from storage location.

NOTE: If crewmen's UCD's are not drained prior to first urination in orbit, perform steps 2.1.1 and 2.1.2 (in lieu of 2.2.1) prior to the following steps.

2.2.2 Obtain urine receiver from storage location and attach to inlet port of selector valve.

2.2.3 Rotate selector valve handle clockwise (direction indicated by arrow on handle) to "Urinate" position.

2.2.4 Obtain urine sample bag from storage location.

2.2.5 Mark sample bag tag with required identification (C or CP, and mission elapsed time).

2.2.6 Place sample bag collar over triangular sampler flange of the selector valve and turn collar 1/6 turn to stop position.

2.2.7 Roll cuff of urine receiver onto penis.

2.2.8 Urinate.

2.2.9 When urination is complete, rotate selector valve handle 90° clockwise to "Sample" position.

2.2.10 Remove penis from urine receiver by rolling cuff off of penis.

2.2.11 Knead and shake mixing bag for at least 20 seconds to insure thorough and uniform mixing of the tracer and urine.

2.2.12 Perform steps 2.1.13 through 2.1.22.

2.2.13 Break quick disconnect at outlet of the CUVMS.

2.2.14 Stow the CUVMS (with urine receiver attached) until needed for subsequent urinations.

2.3 Subsequent Urinations in Orbit

2.3.1 Obtain CUVMS (urine receiver attached) from storage location.

2.3.2 Proceed with instructions for first urination in orbit, steps 2.2.2 through 2.2.14.

2.4 Replacement of Urine Receiver (Every two (2) days or as required)

NOTE: Selector valve handle should be in "By-Pass" position prior to replacing the urine receiver.

2.4.1 Obtain CUVMS (urine receiver attached) from storage location.

2.4.2 Remove used urine receiver from selector valve inlet port and stow in reentry storage location.

2.4.3 Obtain new urine receiver from storage location and attach to inlet port of selector valve.

2.4.4 Stow the CUVMS (with urine receiver attached) until need for urination or proceed with steps 2.2.2 thru 2.2.14.

2.5 Replacement of Tracer Storage Accumulator

NOTE: The tracer storage accumulator must be changed after 60 urinations or five (5) days of flight, whichever occurs first.

2.5.1 Obtain CUVMS from storage location.

NOTE: Selector valve handle should be in the "By-Pass" position.

2.5.2 Remove used tracer storage accumulator from selector valve by unscrewing and stow in reentry storage location.

2.5.3 Obtain new tracer storage accumulator from launch storage location.

2.5.4 Screw new tracer storage accumulator into selector valve and remove pressure - holding pin.

CAUTION: Pin must be pulled to activate new tracer storage accumulator.

2.5.5 Note in flight log mission elapsed time when tracer storage accumulator is replaced.

2.5.6 Stow CUVMS until need for urination.

2.6 Replacement of Mixing Bag (if necessary)

NOTE: This procedure is necessary only if the mixing bag fails in some way during the mission.

2.6.1 Obtain CUVMS from storage location.

NOTE: Selector valve handle should be in the "By-Pass" position.

2.6.2 Remove used mixing bag from selector valve by unscrewing and stow in reentry storage location.

2.6.3 Obtain new mixing bag from launch storage location.

2.6.4 Screw new mixing bag into selector valve.

2.6.5 Stow CUVMS until need for urination.

2.7 Reentry Preparations

NOTE: Selector valve handle should be in the "By-Pass" position following last usage.

2.7.1 Rotate selector valve handle counter-clockwise to "Dump" position.

CAUTION: This is opposite of the direction indicated by the arrow on the selector valve handle.

2.7.2 Remove urine receiver from inlet port of selector valve and stow in reentry storage location.

2.7.3 Remove mixing bag from selector valve and stow selector valve and mixing bag in reentry storage location.

2.7.4 Break quick disconnect at spacecraft bulkhead and stow urine hose assembly in reentry storage location.

APPENDIX G

PROCEDURE FOR SELECTOR VALVE TRACER METERING PUMP CALIBRATION AND DETERMINATION OF UNKNOWN VOLUMES BY LIQUID SCINTILLATION SPECTROMETER COUNTING TECHNIQUE

TABLE OF CONTENTS

I. Preparation of Solutions

A. Apparatus, Materials and Supplies
B. Preparation of Bray's Solution
C. Preparation of Tritiated Tracer Solution

II. Use of Liquid Scintillation Spectrometer

A. Apparatus, Materials and Supplies
B. Spectrometer Settings
C. Operation of Spectrometer

III. Pipette Calibration

A. Apparatus, Materials and Supplies
B. Primary Method of Pipette Calibration
C. Secondary Method of Pipette Calibration

IV. Preparation of Samples and Sample Activity Counting

A. Apparatus, Materials and Supplies
B. Background Counting
C. Sample and Spike Counting

V. Quench Correction and Data Interpretation

VI. CUVMS Calibration and Volume Determination Calculations

A. Calibration of CUVMS Tracer Metering Pump
B. Calculation of Unknown Volumes

VII. CUVMS Tracer Storage Accumulator Charging Procedure

A. Apparatus, Materials and Supplies
B. Charging and Sealing Operation

I. Preparation of Solution

A. Apparatus, Materials and Supplies

1. "PPO" Scintillation Fluor (Pilot Chemicals, Inc. or equal).
2. "POPOP" Scintillation Fluor (Pilot Chemicals, Inc. or equal).
3. Naphthalene(Eastman - DPI No. 168 or equal).
4. P-Dioxane (Eastman - DPI No. 2144 or equal).
5. Methanol, absolute, spectrographic grade
6. Amber Glass Storage Bottle
7. Ethylene glycol, reagent grade
8. Propylene Glycol, U.S.P.
9. Tritiated Water, Biological Grade (Activity 1 millicurie per gram) (New England Nuclear Corp. No. NET 001B or equal)
10. Volumetric Flask, 1 liter or larger

B. Preparation of Bray's Solution (Scintillation Fluid)

1. To make one (1) liter of solution, weigh out 120 grams of naphthalene 4.0 grams PPO, 0.2 gram POPOP and transfer to the volumetric flask. Add 100 ml. methanol, 20 ml ethylene glycol and sufficient p-dioxane to make up 1 liter.
2. The solution reaction is strongly endothermic and cools rapidly while being prepared. After the

components are dissolved, the contents of the volumetric flask should be transferred to the amber glass bottle, tightly stoppered and stored for 24 hours before use, with occasional stirring. The solution is fully useful for at least 30 days.

C. Preparation of Tritiated Tracer Solution

1. Prepare a solution of 50% distilled water - 50% propylene glycol by volume. To 1 liter of this solution add 1.4 ml of tritiated water. This will give a nominal tritium activity of 14 microcuries per ml. It is not necessary to know the absolute activity.

II. Use of Liquid Scintillation Spectrometer

A. Apparatus, Materials and Supplies

1. Liquid Scintillation Spectrometer, Packard Instrument Co., Inc. or equal, with at least two counting channels (three preferred) and with refrigerated, temperature controlled, automatic changer. Sample capacity 200 vials.

B. Spectrometer Settings

1. The values following apply particularly to the Packard Instrument Co. Liquid Scintillation Spectrometer Model 3324. A different make or model would require experi-

mentation and trial to determine suitable instrument adjustments. The urine volume measurement by this tracer dilution method is performed best by the "Internal Standardization" technique and this technique was used with the above referenced instrument for each of the three channels.

Gain: 43%

Counting energy window: 50-1000

C. Operation of the Spectrometer

1. After the spectrometer has been installed and checked out for proper functioning, the main power is turned on and left on continuously. Only the high voltage power supply switch is turned off when the instrument is not in use. The refrigerator thermostat is adjusted to maintain a constant temperature of 5°C.

2. Sample vials placed into the machine for counting are dark adapted for 20 minutes before stabilized readings are taken. Each sample is counted for 10 minutes. The spectrometer model referenced above incorporates an automatic "background subtract" feature, and this is set according to values obtained with "blanks" counted at the same time as the active samples. Full details of the operation of the spectrometer must be obtained from the Instruction Manual supplied with the instrument, and from the manufacturers technical representative who installs and checks out the instrument. All samples to be counted must have been

carried through a complete cycle of the counting vial transport mechanism, to insure equilibrium and uniformity of the sample.

III. Pipette Calibration

A. Apparatus, Materials and Suppliers

1. Hamilton Micro Syringe, 10 lambda (10 micro-liter)
2. Lang-Levy - 500 lambda (0.5 ml)
3. Weighing Bottle or Plastic Screw Cap Vial, 10 ml capacity.
4. Semi-Micro Analytical balance, direct reading to at least five (5) decimal places.
5. Counting vials, 20 ml capacity (Wheaton Scientific Products Co. No. 30002-1A, or equal).

B. Primary Method of Pipette Calibration

1. Place two (2) to three (3) ml of distilled water into weighing bottle and weigh after closing tightly, to minimize loss by evaporation.
2. Using a 10 lambda pipette, deliver 10 consecutive volumes into the vial - close tightly between and after delivery, and reweigh.
3. Repeat step (2.) above twice again.
4. Using the same Pipette, perform five individual pipettings and weigh each incremental volume as above.

5. Calculate average weight per pipettings for steps (2.) and (3.) above and calculate the weights for each individual pipetting of step (4.).

   The weights for the individual ipettings should be reproducible within ± 0.2%. Attainment of this reproducibility requires practice and can readily be obtained with experience.

   The average of the individual pipettings and the average values obtained for the multiple pipettings are added, and the final average is used as the value for the true volume delivered by the pipette, calculated to four decimal places.

6. The above procedure (steps B1-5) is performed with the 0.5 ml pipette, calculating to three decimal places for the final calibration value.

C. <u>Secondary Method of Pipette Calibration</u>
(10 lambda pipette only)

1. Using the 10 lambda pipette to be calibrated, transfer tritiated tracer solution (per Section IC above) into 10 ml of Bray's Solution (per Section IB above) contained in a clean counting vial and screw cap on tightly. (New vials must be used for each counting, as cleaning and reuse introduces the possibility of spurious and unreproducible background counts. The counting vials may be used as received.) Agitate solution to insure thorough mixing. Repeat this procedure for a total of 20 pipettings.

2. Using the same tracer solution, pipette 20 quantities of 10 lambda each, using a pipette previously calibrated by the primary weighting method into another 20 counting vials and agitate.

3. All 40 vials are placed into the Liquid Scintillation spectrometer and counted for 5 minutes each (Reference Section II).

4. The arithmetic average counts per minute (cpm) for each group of vials is calculated, and the ratio of these averages, times the absolute calibration value for the reference pipette gives the delivery calibration for the new pipette.

IV. Preparation of Samples and Sample Activity Counting

A. Apparatus, Materials and Supplies

1. Hamilton Micro-Syringe, 10 lambda
2. Lang-Levy Pipette, 0.5 ml
3. Bray's Solution
4. Counting Vials
5. Liquid Scintillation Spectrometer
6. Tritiated Tracer Solution

B. Background Counting

1. Place 10 ml of Bray's solution into each of three (3) counting vials and place into Scintillation Spectrometer. After minimum of 20 minute dark adaptation and temperature equilibration time,

count each vial at least three times, with 10 minute counting times. Each count should be taken after the spectrometer transport mechanism has been through a complete cycle. The average value for the three counts is used for background subtraction for the appropriate spectrometer channel.

C. Sample and Spike Counting

1. An aliquot of 0.5 ml (using a calibrated pipette) is taken from the tritiated solution to be counted, and pipetted into 10 ml of Bray's solution contained in a counting vial. This is repeated for a total of five (5) aliquots. To each of two (2) of the vials 10 lambda of tracer solution is added with a calibrated pipette. It is important that the pipettings be performed as rapidly as possible and that the vials be capped tightly immediately after pipetting to prevent loss of tracer by evaporation. The vials are then placed into the spectrometer and 10 minute counts taken as described above.

   (Note: A total of three aliquots with one 10 lambda spike may be used, with slightly reduced statistical accuracy and reduced opportunity of checking of pipetting reproducibility; there will be a concomitant reduction in total time required for manipulation, counting and calculation of results).

   The use of an automatic pipette for measuring out the Bray's solution, and calibration of automatic

pipettes with good reproducibility for sample aliquot and spike dispensing will considerably reduce the time required for manipulation of solutions in preparation for counting.

V. Quench Correction and Data Interpretation

1. Because of various physical and chemical properties (color, radiant energy absorption, dissolved solids, etc.) urine (and other fluids, including distilled water), will quench (mask) photons generated in the scintillation solution by the beta particles liberated from the tritium tracer.

   This quenching varies with the nature and concentration of the sample being counted, and normally must be corrected for in order to obtain a true and accurate measure of the tracer activity (counts per minute). In the tracer dilution method of determining unknown volumes, the value of the quenching factor does not have to be known on an absolute basis, as the particular technique used automatically takes the quenching into account.

VI. CUVMS Calibration and Volume Determination Calculation

A. Calibration of CUVMS Tracer Metering Pump

1. The determination of unknown volumes requires an accurate value for the quantity of tracer introduced

into the urine, and for the pipette delivery values for the 0.5 ml sampling pipette and the 10 lambda spiking pipette.

The quantity of tracer from the CUVMS metering pump introduced into the urine is determined by passing known volumes of urine (or water for flight hardware) through the complete system after injecting the tracer into the system. The tracer is thoroughly mixed with the known dilution volumes, and samples taken and counted as described above.

For the determination of unknown volumes, the following expression applies

a) $$Vu = K \frac{S}{C_u - B}$$

where Vu = unknown volume of urine to be measured

S = counts per minute of 10 λ spike

C_u = counts per minute of the urine aliquot alone

B = background count

The constant, K, in the above expression, is calculated from the following expression:

b) $$K = \frac{VaVm}{Vs}$$

where

Va = Actual (calibrated) volume of sample aliquot delivered by the 0.5 ml sampling pipette

Vm = Calibrated tracer solution volume delivered by the CUVMS tracer metering pump

Vs = Actual (calibrated) volume of tracer solution delivered by the 10 lambda spiking pipette

2. The value of Vm, which provides the CUVMS tracer required for dilution into the unknown urine volume, may be calculated by using a series of accurately known water (or urine) volumes with the CUVMS, in conjunction with the above expression a), rearranged:

c) $$Vm = \frac{VuVs}{Va} \quad \frac{(C_u - B)}{(C_{u+s}) - (C_u)}$$

In the above equation, Vu now represents the <u>known</u> volumes introduced into the CUVMS, which is operated according to the Operating Instructions for the system. Each system is calibrated using the following series of known volumes:

4 volumes of 500 ml each
4 volumes of 100 ml each
4 volumes of 250 ml each

These quantities are delivered to the inlet of the CUVMS from standard Class A accuracy volumetric flasks, specified "to deliver". Since all quantities in expression c) above are known, Vm can be computed and an average value obtained. Comparison of the individual values of Vm will also demonstrate the reproducibility of the overall system operation.

B. Calculation of Unknown Volumes

1. Using expression a) & b) above, a sample volume determination calculation follows:

a) $$Vu = K \frac{(C_{u+s}) - C_u}{C_u - B}$$

b) $$K = \frac{VaVm}{Vs}$$

From pipette calibrations and CUVMS tracer metering pump calibration, a typical value for K is:

$$K = \frac{(0.493)\ (.255)}{0.009971} = 12.6$$

$$Vu = 12.6 \frac{(80.634 - 1992)}{(1992)} = 497.4$$

The actual volume used as an "unknown" in the above example was 500 ml, resulting in a deviation of -0.52%.

APPENDIX H

REFERENCES TO ANALYTICAL METHODS FOR URINE CHEMICAL CONSTITUENTS

1. Calcium

   a) Ferro and Ham, Am. J. Clin. Path., 28, 689, (1957) as modified by Chiamori and Henry, P.S.E.BM., 97, 817, (1958).

   b) Technician Corp., Ardsley, N.Y., Autoanalyzer Method.

2. Magnesium

   a) Sky-Peck, H.H., Clin. Chem., 10, 391, (1964).

   b) Perkin-Elmer Corp., Norwalk, Conn., Flame Emmission Apparatus Method.

3. Sodium and Potassium

   a) Mosher etal, Am. J. Clin. Path., 19, 461, (1949)

   b) Coleman Flame Photometer Operating Manual Method

4. Phosphorous

   a) Fiske and Subba-Row, J.B.C. 66, 375, (1925)

   b) Technicon Corp. Autoanalyzer Method

5. Bicarbonate

Technicon Corp. Autoanalyzer Method

6. Chloride

Technicon Corp. Autoanalyzer Method

7. Total Nitrogen

a) Micro-Kjeldahl - AOAC Method

b) Hoffman and Osgood, J. Lab. & Clin. Med., 25, 856 (1940)

8. Creatinine

a) Methods of Biochemical Analysis, 7, 200, Interscience Publishers, N.Y. (1959)

b) Hare, R.S., P.S.E.BM., 74, 148 (1950)

c) Kingsley, G.R., and Schaffert, R.R., Standard Methods of Clinical Chemistry, Vol. 1, 55, Academic Press, N.Y. (1953)

9. Hydroxyproline

a) Ziff etal, Analytical Biochemistry, 1, 228 (1960)

10. Urea

Urease Method, Urograph Instruction, Warner-Chilcott Co., Morris Plains, N.J.

11. Uric Acid

Scandinavian J. of Lab. & Clin. Inv., Vol. I 222, (1949), also Vol. V - VI, 273 (1955)

12. Osmolarity

Operating Manual - Freezing Point Depression Apparatus, Advanced Instrument Inc., Newton Highlands, Mass.

13. 17 Ketosteroids

Modif. Drakter, J. Clin. Endo. & Metab., 13, 55 (1952)

14. Catecholamines

Modif., Jacobs, Sobel & Henry, J. Clin. Endo. & Metab., 21, 305 (1961)

15. Alpha Amino Acid Nitrogen

Sobel, Henry, Cheamori & Segalove, Proc. Soc. Biol. Med., 95, 808 (1957)

16. Quininan

Beckman Spectrophotometer Operating Manual

17. Acridine

Beckman Spectrophotometer Operating Manual

18. Propylene Glycol

a) Gas Chromotography - J. Gas Chromotography Sept. (1964)

b) Colorimetric Method. Monsanto Chemical Co. Technical Manual

End of Document