https://ntrs.nasa.gov/search.jsp?R=19680004048 2018-07-19T18:36:42+00:00Z

TECH LIBRARY KAFB, NM
0060210

NASA CONTRACTOR REPORT

NASA CR-9

NASA CR-986

LOAN COPY: RETURN TO
AFWL (WLIL-2)
KIRTLAND AFB, N MEX

STUDY OF AIRCRAFT IN SHORT HAUL TRANSPORTATION SYSTEMS

Prepared by
THE BOEING COMPANY
Renton, Wash.
for Ames Research Center

NATIONAL AERONAUTICS AND SPACE ADMINISTRATION • WASHINGTON, D. C. • JANUARY 1968

TECH LIBRARY KAFB, NM

0060210

NASA CR-986

STUDY OF AIRCRAFT IN SHORT HAUL TRANSPORTATION SYSTEMS

Distribution of this report is provided in the interest of information exchange. Responsibility for the contents resides in the author or organization that prepared it.

Prepared under Contract No. NAS 2-3862 by
THE BOEING COMPANY
Renton, Wash.

for Ames Research Center

NATIONAL AERONAUTICS AND SPACE ADMINISTRATION

For sale by the Clearinghouse for Federal Scientific and Technical Information
Springfield, Virginia 22151 – CFSTI price $3.00

CONTENTS

		Page
1.0	INTRODUCTION	1
2.0	OBJECTIVES	3
3.0	STUDY CONSTRAINTS AND GUIDELINES	5
4.0	CONCLUSIONS AND DISCUSSION	7
4.1	Conclusions	7
4.2	Discussion	9
5.0	RECOMMENDATIONS	11
5.1	Areas of Research and Further Study—Technology	12
5.2	Areas of Research and Further Study—Market/Vehicle Economics	13
6.0	SUMMARY OF RESULTS	15
6.1	Study Transportation Systems	15
6.2	Advanced Technology	18
6.3	Study Concepts and Configurations	19
6.4	Operating Costs	26
6.5	Vehicle Profitability	36
6.5.1	Fare Levels	36
6.5.2	Concept Unit Profitability	41
6.6	Systems Analysis and Concept Suitability	44
6.6.1	Economic Suitability	44
6.6.2	Community Suitability	58
6.6.3	Passenger Suitability	64

ILLUSTRATIONS

Summary

		Page
1	Selected Cities in Each Transportation System	14
2	Total City-Pair Traffic Northeast—1985	16
3	Total City-Pair Traffic West Coast—1985	17
4	Total City-Pair Traffic Gulf Coast—1985	18
5	Helicopter VTOL—120-Passenger Capacity	19
6	Tilt-Wing VTOL—120-Passenger Capacity	20
7	Folding Tilt Rotor VTOL—120-Passenger Capacity	21
8	Fan-in-Wing VTOL—120-Passenger Capacity	22
9	Jet Lift VTOL—120-Passenger Capacity	23
10	High Lift STOL—120-Passenger Capacity	24
11	High Acceleration STOL—120-Passenger Capacity	25
12	Conventional CTOL—120-Passenger Capacity	25
13	Direct Operating Cost—90-Passenger Capacity	31
14	Direct Operating Cost—120-Passenger Capacity	32
15	Direct Operating Cost—200-Passenger Capacity	33
16	Indirect Operating Cost—200-Passenger Capacity	34
17	Indirect Operating Cost—200-Passenger Capacity, Reduced Facilities Depreciation	35
18	Conventional Airplane Base Fare—1985	37
19	Trip Cost—Northeast and West Coast	38
20	Trip Cost—Gulf Coast	39
21	Total Trip Time—Northeast	40
22	Return on Sales—Northeast, 200-Passenger Capacity	42
23	Return on Sales—Northeast, 120-Passenger Capacity	43
24	Return on Sales—Northeast and West Coast, 200-Passenger Capacity V/STOL Fare Reduced to CTOL Level	45
25	Return on Sales—Northeast and West Coast, 120-Passenger Capacity V/STOL Fare Reduced to CTOL Level	46
26	System Profit Concept Comparison—Northeast	47
27	System Profit Concept Comparison—West Coast	48
28	System Profit Concept Comparison—Gulf Coast	49
29	System Profit Optimum Fleet Mix—Northeast	50
30	System Profit Optimum Fleet Mix—West Coast	51
31	System Profit Optimum Fleet Mix—Gulf Coast	51
32	System Profit Concept Comparison—Total Three Regions	52
33	System Profit Effect of Reduced Fare Level — Northeast	54
34	System Profit Effect of Hover Time—Total Three Regions	55
35	System Profit Effect of Additional Air Maneuver Time—Total Three Regions	56
36	System Profit Effect of Technology Contributions—Total Three Systems	57
37	Optimal Fare Analysis—Northeast NYC-DCA	59
38	System Profit Concept Summary—Tilt Wing	60
39	System Profit Concept Summary—Jet Lift	61
40	System Profit Concept Summary—High-Lift STOL, 2200 Feet	62

ILLUSTRATIONS (Continued)

		Page
41	Profit Divided by Airplane Investment Concept Comparison—Northeast	63
42	High-Acceleration STOL Noise Contours—Boston	66
43	Jet-Lift VTOL Noise Contours—Boston	66
44	Tilt-Wing VTOL Noise Contours—Boston	67
45	Folding Tilt Rotor VTOL Noise Contours—Boston	67

TABLES

Summary

		Page
1	General Characteristics Summary	27
2	Weight Summary—All Concepts, 120-Passenger Capacity	28
3	Weight Summary—All Concepts, 200-Passenger Capacity	29
4	Airplane Acquisition Price	30

This document is a condensed summary of the data and conclusions found in The Final Report of Study Of Aircraft In Short Haul Transportation Systems, Volumes 1 and 2, D6-58247-1, and D6-58247-2 respectively.

PREFACE

The prime responsibility for this study was placed in the Commercial Airplane Division of The Boeing Company.

The Study Manager, D. W. Hayward, is Chief of Commercial Studies, Exploratory Development Group.

This group, R. D. FitzSimmons, Manager, reports to J. E. Steiner, Vice President — Product Development, Commercial Airplane Division.

The Vertol Division generated the rotor and tilt wing technology and configuration data for this study. The Vertol coordinator was B. L. Fry of the Advanced Design Section.

Other principal personnel include:

Configurations	C. R. Rushmer B. L. Fry	Commercial Airplane Division Vertol Division
Aerodynamics	J. R. Monk A. Schoen	Commercial Airplane Division Vertol Division
Propulsion	J. P. Zeeben R. Semple	Commercial Airplane Division Vertol Division
Structures and Weight	R. R. June R. Deapen J. Wisniewski	Commercial Airplane Division Commercial Airplane Division Vertol Division
Electrodynamics	J. H. Foster	Commercial Airplane Division
Noise Analysis	C. F. Wintermeyer E. Hinterkeuser	Commercial Airplane Division Vertol Division
Market Analysis	W. M. Wallace	Commercial Airplane Division Product Economics and Market Research Group
Vehicle Economics	S. M. Wetherald	Commercial Airplane Division Product Economics and Market Research Group
Systems Analysis	J. E. Rice	Commercial Airplane Division Product Economics and Market Research Group

1.0 INTRODUCTION

This report presents a summary of the results of a study conducted by The Boeing Company under contract to the Mission Analysis Division, Office of Advanced Research and Technology, National Aeronautics and Space Administration. The study was principally conducted by the Commercial Airplane Division at Renton, with rotorcraft technology and engineering being supplied by the Vertol Division at Morton, Pennsylvania.

The intent of this study is to evaluate short-haul transport aircraft, of a more advanced technology than has been assumed in other studies, in operation in several assumed transportation systems in the 1985 period. These systems are limited to intercity operation; intracity use of any of these designs is not considered in this study. Thus this study is not concerned with markets where city-pair trip distance is less than 30 miles.

The study is one in which various advanced conceptual aircraft, ranging from vertical takeoff and landing (VTOL) through short takeoff and landing (STOL) to conventional takeoff and landing (CTOL) types, are assessed for their relative suitability to perform short-haul transport missions.

The analysis was conducted in two phases: Phase I was concerned with preparation of various conceptual aircraft configurations and the study of the operation of these on a number of assumed transportation systems. The intent in Phase II was then to select for detailed analysis three representative systems and the optimum aircraft concepts from each of these systems.

2.0 OBJECTIVES

The principal objectives of this study are:

- To determine the relative suitability of various advanced conceptual aircraft to perform short-haul missions in the 1980's, including the effects of realistic route structures and system operations
- To determine the sensitivity of mission performance to changes in the aircraft characteristics and system operations
- To identify key problem areas wherein additional research may result in significant improvement in aircraft transportation systems

So that the result of such an investigation be significant, as broad a transportation requirement as possible is considered, with the systems model made as near representative of the time period specified as can be done at this time. Consequently, three separate areas of the country are studied, two of whose transportation characteristics (density of demand and length of trip segment) are significantly different. The areas studied are Northeast, West Coast, and Gulf Coast and Florida.

Various figures of merit are considered in assessing the relative suitability of the concepts. In addition to the usual direct operating cost (DOC) versus range, vehicle profitability on a systems-wide basis is estimated. This introduces the revenue passenger demand and aircraft fleet size aspects into the comparison procedure. The extent and magnitude of the noise generated by each concept is also used as a measure for comparison.

Of equal importance as an objective of the study is to review the many possible options of aircraft concept and fleet mix and to assess the effect of design and operational variables on the conclusions of the study, so that the most fruitful areas of research may be identified as influenced by the most suitable of the concepts.

3.0 STUDY CONSTRAINTS AND GUIDELINES

Of prime importance in a study that involves any appreciable amount of systems analysis is a clear statement of the assumptions and limitations associated with the study. This is especially significant if the investigation concerns a possible transportation system of almost a generation hence.

This section of the report presents a series of qualifying statements, the context of which are definitely aspects of the total short-haul transportation system problem, and need consideration and resolution before a practical system is ever evolved in the 1985 time period. It is considered unnecessary, however, and in fact at this time in some instances impossible, to resolve these issues to satisfy the objectives of this study for NASA.

By definition, the study is to consider the 1985 time period and is to investigate the relative suitability of the various VTOL/STOL/CTOL concepts. Thus, the question of whether in fact VTOL or STOL service would exist in significant quantity is not considered. It is assumed it will and that all of the concepts will be possible; hence the emphasis is placed on evaluating the suitability of the concepts and determining the research required.

While predictions on market size and technology are made for use in the systems model for the time period required, no attempt is made to answer the question of how, in detail, that market growth will be stimulated between 1967 and 1985. Research has shown, however, that when markets are stimulated by convenient, frequent service at a competitive fare level, considerable growth always takes place. Thus, estimates of market size are made on the basis that the proposed V/STOL systems would, in fact, do this. In similar vein, no investigation into a planned program of introduction of various V/STOL concepts into service between 1967 and 1985 is made, nor how such a program may affect the study results. It is recognized that there are different amounts of time, effort, and money implicit in each of the levels of technology specified for the various concepts, but no attempt has been made to base these levels on a specified program of events between 1967 and 1985. It should be emphasized, however, that the size of the market and the availability of both the concept and relative level of technology do assume that both of these questions will be addressed and solutions found.

Where it is believed that certain concepts will continue to exist by virtue of their present existence in 1967 or of first generation introduction sometime later, then solutions for 1985 have been provided for these particular concepts, whether they emerge in this study as a most suitable concept or not.

One of the guidelines of the study is to establish the assumed transportation systems to include at least ten leading U.S. cities in the Northeastern, West Coast and Gulf Coast and Florida regions. Consequently, the postulated markets are representative only of the systems model prepared for this study and are not intended as a company forecast of traffic levels from which sales forecasts could be made.

While the detailed nature of the growth of these cities is not studied, it is assumed that this growth will still leave the major population or traffic generating centers as discrete areas greater than approximately 80 miles apart. This is particularly significant in the Northeast states.

The study assumes that this V/STOL service is supplied by one or two operators and does not consider the problem of possible government legislation of city service among several operators as typified by current CAB route-granting procedures. These operators are assumed to provide their services in an environment that is subsidized neither by government support nor by revenue from another part of a large transportation system. Thus, the cost of the ground facilities (but not the land) is included in the operating cost estimates. Sensitivity studies, however, do show the effect of omitting this cost.

The depth to which the economic analysis is pursued is limited by the fact that the postulated operators do not have an economic or financial history from which to work. Return on sales (ROS) has been selected as the profitability criterion because it is easily understood, widely accepted, and not overly sensitive to fare changes. Among the criteria not chosen is return on investment (ROI) because of its oversensitivity to fare changes and investment level and because of its time-sensitive nature, which makes the determination of ROI for a simple study point (1985) less valid than the determination of ROS. Passenger and operator preferences that can affect the estimates of market demand and operating cost are acknowledged to exist, but no attempt is made in this study to quantify these items in market and cost estimates.

At the direction of NASA, no analysis is attempted of presently projected high-speed ground transportation systems or of their effects on the study results. Similarly, little emphasis is placed on making comparisons of operating costs, travel times, or costs of other competitive ground transportation systems.

While some technical details are specified by NASA in the contract guidelines and constraints, it is not generally intended that this study should involve any detailed analysis of specific technical areas as, for example, noise, vehicle handling qualities, or particular problems associated with any one of the propulsion concepts. Rather the study should provide visibility on a system-wide basis of the effect of gross level changes in design or operations technology.

It is recognized that different degrees of schedule reliability may exist due to differences in vehicle reliability as a function of the degree of complexity in vehicle design. In this study, it is assumed that all concepts are equally reliable and that the resulting levels of technology and development required in each concept will be the goal that must be achieved with this system. In this way the degree of development required is a figure of merit for concept comparison.

4.0 CONCLUSIONS AND DISCUSSION

4.1 Conclusions

The economic suitability to perform short-haul missions in the 1980's of most of the V/STOL concepts studied is demonstrated by their ability to make a profit when in competition with conventional airplane systems (CTOL), if the V/STOL air fare structure allows for a premium charge, the increment being equivalent to the difference in terminal access costs (thereby causing the total trip cost by all modes to be equal).

The relative economic suitability between concepts is, however, more difficult to define precisely in view of the close proximity of the levels of total system profit of some of the concepts when exercised with the design assumptions as determined for use in this study. While these assumptions are established as being a sound basis upon which to compare many concepts, and hence the solutions presented represent a highly probable conclusion, it is recognized that these assumptions are subject to change, in total or as applied to only certain concepts. The configuration parameters are difficult to define for this advanced period where certification requirements, as yet undefined, may have significant effects on airplane characteristics. Particular effort has been made to evaluate what these influences may be, and trade studies are included which cover most of these possibilities. In the summary, Section 6.6.1, can be seen, for example, the effect on system profit of applying different assumptions of vehicle operation and of cost estimation. It is possible, therefore, to establish many solutions to the problem of selecting the most suitable concept from an economic viewpoint. Consequently, it is concluded that, at this time, economic suitability does not provide a satisfactory measure with which to segregate precisely the potential short haul vehicle concepts.

It is shown that groups of concepts and operating environments are more readily identifiable, where concepts within these groups exhibit very similar profit potential. These groups can then provide a broad measure of relative economic suitability. The groups can be classified thus: A "downtown" group of nonrotor concepts comprising the jet lift and fan-in-wing VTOL concepts and the high lift and high acceleration STOL concepts of under 1700 feet (518 m) design field length; a "downtown" rotor group, comprising the tilt wing and the folding tilt rotor VTOL concepts; a pure helicopter as differentiated from the rotor VTOL concepts; a "suburb" STOL high lift concept of 2200 feet (671 m) design field length; and finally two groups of conventional CTOL aircraft representing expedited or low maneuver time operations and congested or normal maneuver time operations.

These groups are found to exhibit trends that are discernibly different from each other; thus it is possible to note that the rotor VTOL concepts (exclusive of the helicopter) are more economical at the shorter ranges, while the nonrotor VTOL concepts are better at relatively longer distances. Aircraft size and the differences in fare in the various geographical regions make it impossible to quote a distinct demarcation line in range. The short field or downtown STOL concepts are included in the nonrotor group. The 2200-ft STOL concept, however, is found to be the most economical V/STOL concept at the longer distances.

If, however, the operator of the V/STOL system finds that the competitive situation does not allow a premium fare to be charged, and postulating that the air fare of the V/STOL system may be set equal to the CTOL fare, then the above statements must be modified; the economic suitability of some of the concepts is thus in doubt. The relative suitability between concepts, however, does not change substantially. The most noticeable effect is the expected decline in profitability of the V/STOL concepts when compared with the CTOL concepts.

Thus, while the economic suitability between the concepts is difficult to define precisely at this time, which makes the selection of a best concept almost impossible using this figure of merit, the relative suitability from the aspect of noise may be easier to distinguish. This latter figure of merit may in fact be the major criterion upon which an ultimate selection of a suitable concept or concepts is made.

It is shown that generally the rotor vehicles exhibit a noise level some 10 to 17 PNdb lower than the nonrotor downtown vehicles. However, the critical factor to be considered here is that there does not exist at this time a comprehensive set of acceptance criteria against which the noise aspects of vehicles can be measured. Thus, until these criteria have been established, it will not be possible to determine that some concepts are acceptable while others are not, even though it will be possible to show some are quieter than others and hence are potentially more suitable.

Thus, while consideration of suitability from the economic viewpoint generally favors the V/STOL concepts as a group, where it is implied that this V/STOL system is operated from a downtown or center of a traffic generating area, the final determination of overall suitability of any particular concept will have to await the establishment of noise acceptance criteria and the results of further research into noise suppression where the criteria indicate the need.

This last statement does not ignore that there are other criteria for measuring suitability, such as vibration and acceleration, for example. It rather recognizes the primary importance of the economic suitability within an environment permitted by the community.

Areas of research are established that are generally necessary for this potentially profitable situation to exist, in addition to certain specific areas associated with certain concepts. With the exception of emphasizing the importance of developing acceptance criteria and continuing research into noise suppression generally, no attempt is made to select an order of preference for any particular area of research associated with any specific concept where this might be interpreted as being based on the suitability of the concept to perform short-haul missions. Further, it is concluded that future research in a broad field encompassing all possible concepts is still necessary to provide a firmer base from which to prepare a more precise concept comparison.

While it is shown that certain rotor VTOL concepts are, indeed, less noisy and more profitable at some ranges than nonrotor VTOL concepts, it is recognized that the principal difference in profitability is in the apparently lower lift system maintenance costs associated with the rotor concepts. Considering that

the systems are assumed, at this time, to be equally reliable, it must be recognized that probably more time and money must be spent to achieve this level in the relatively more complex rotor systems than in the lift engine or the lift fan systems. While this conclusion of itself can be regarded as a goal for research, it is too early to be certain that the goal will be reached or that it is not more cost effective to concentrate money and effort into developing a system with inherently more possibility of higher reliability.

Throughout this study it is assumed that the V/STOL systems exist in competition with the CTOL system. In fact, the CTOL concepts are used to establish a base fare level to represent the air competition the V/STOL systems must recognize. Thus again, while the study shows that certain V/STOL concepts can be profitable in competition with these CTOL systems, it must also be recognized that the development required in the CTOL system is far less than in certain VTOL concepts.

Thus, while it is concluded that certain areas of research are essential to improve the possibility that certain V/STOL concepts can perform a practically profitable service in short-haul, intercity transportation that is acceptable to the community, it is also recognized that if the apparent suitability advantage of specific concepts is also to be realized, then more effort and money are implicit in analyzing and achieving this advantage than may be in other less complex systems. In addition, unless emphasis is placed on the establishment of acceptance criteria and unless research is continued into noise suppression, it is possible that an economically suitable system may not in fact be a system that is acceptable to the community.

The possibility must be further considered that a rapid transit system to a suburban STOL terminal or the conventional CTOL airport can provide a service that is equally as convenient and inexpensive as a downtown V/STOL port for intercity service and less disturbing to the community.

In view of these possibilities, a hard look must be taken at whether the specific V/STOL system research is justifiable for a commercial transportation system.

4.2 Discussion

Earlier it is stated that the profitiability difference between certain concepts is small and subject to a lack of certainty at this time. Aside from the possible existence of assumptions different from those established for the base level of this study, which may allow a clearer segregation of concepts, the small profit difference is assessed as follows: A detailed study of the analysis, and in particular of the direct operating costs, shows that apart from small differences due to airplane size and fuel burned, the major difference centers in the maintenance of the lift systems. Here the difference appears to emanate from the fact that any lift system that involves gas generators, in addition to cruise engines with attendant relatively high first price and costly overhaul and maintenance, will experience higher direct operating costs. This statement is based on the assumption that all systems are assumed to have the same level of reliability. If this is not the case, then the relative level of operating costs between VTOL concepts could change.

Thus, until some practical operating experience is obtained with each of the various lift systems studied, it will be difficult to assess true relative operating costs. Engineering judgment and past experience can certainly indicate the concept that is likely to need the most development in order that a profitable level of reliability can be established. But the precise determination of these levels is beyond the scope of this study.

A further factor affecting the relative suitability of concepts is the assumptions made with regard to V/STOL fare levels. It is shown how the level of operator profit varies when a premium fare is charged by the V/STOL operator, this fare being equal to the fare the conventional airplane operator charges plus an increment to allow for the difference in access costs between the V or STOL terminal and the CTOL airport (so that the total trip cost by any mode is the same). This assumption gives one measure of concept relative suitability. If the V/STOL fare is made equal to the CTOL fare, however, it is apparent that a different suitability index is generated for each concept, and in fact, some become unprofitable. Conversely, it is also shown that if an even higher premium is charged by the V/STOL operator, in which it is assumed that the passenger values the time that he saves by going the V/STOL way, it is possible to form a clearer margin of concept relative suitability because the time advantage of some of the concepts is now emphasized.

The extent to which the advances in technology in each of the disciplines is necessary to achieve these variously attractive systems is shown in the summary. For instance (see fig. 36), all concepts gained in an economic sense from the advance in structural materials that is postulated, and this gain appears to be one of the strongest forces contributing to the reduction of operating costs. All concepts reflect the advances assumed for the various lift systems and augmented power systems in three areas: (1) increased usable life, (2) increased reliability, and (3) increased times between overhaul. It should be recognized that along with the assumption of advanced material properties goes another that considers that sufficient raw material is produced so that costs of the advanced materials are comparable to current aluminum and titanium and that manufacturing methods and cost are at least comparable to the 1966 level. The relative merits of research in other areas are also indicated. However, it should be realized that these indications do not provide any measure of how easy it will be to achieve the required levels of technology. It is possible that the advances postulated in the aerodynamic and propulsion areas are technically simpler and less costly to achieve than those in the advanced materials area.

5.0 RECOMMENDATIONS

As a result of this study, key problem areas are identified in which additional research will enhance the possibility of an acceptable, efficient, and competitive short-haul air transportation system. Certain of the research areas will benefit all concepts, while others pertain to specific concepts.

However, in addition to recommending areas of research, it is evident from this study that in order to understand, and accordingly respond to, this total short-haul transportation system problem of the future and its development needs (whether research or stimulation) much more detailed study is required in various related areas. These areas, while not necessarily the responsibility of NASA, are presented here, as it is strongly believed that areas of research should not be recommended without the relevant support qualifications also being stated. In this current study assumptions have been made in the following very influential areas, and thus form qualifications to the research recommendations.

- The need for the system and its potential added convenience is assumed to have been justified.
- The traffic growth to the level specified in 1985 is assumed to have occurred gradually over the intervening period, having been stimulated by the provision of some next-generation convenient, economical, short-haul system (either VTOL, STOL, or even modified CTOL operation). The nature or timing of this next generation system is not analyzed in this current study.
- It is assumed that government agencies at the federal, state, and city level have planned for the existence of systems similar to those studied under this contract.
- It is assumed that competition from high-speed ground systems is not severe enough to preclude the possibility of a successful VTOL/STOL/CTOL short-haul air system.

Consequently, recommendations for research and further study include the necessity for work in studying the above areas before large commitments of time and money are made in certain technical research fields. These research efforts may further a system that may not prosper for reasons found in some of the above areas, even though it possesses the potential to operate fast, economical, and attractive vehicles.

In view of the difficulty in establishing clearly the suitability of any particular concept, no priorities have been assigned to the specific research efforts required by specific concepts. However, areas of research and further study are identified and broadly ordered that are critical to the implementation or improvement of an economical, successful short-haul system involving any of the V/S/CTOL concepts.

5.1 Areas of Research and Further Study—Technology

1. - Develop acceptance criteria for noise analysis
   - Study noise suppression and effect of noise on population centers

2. - Develop design standards for V/STOL aircraft:

     Maneuver margins

     Stall margins

     Engine-out conditions and other conditions to be considered concurrently

     Design-field-length factor

     Control response requirements

     Handling characteristics

     Allowable horizontal deceleration and aircraft attitude limits for passengers

   - Landing aid and navigation system (optimum for maximum airspace utilization)
   - Maximize runway acceptance rate (airplane/electronics integration)
   - Automatic landing systems, 100% all-weather
   - Air traffic control development

     } Improvement in air maneuver ground maneuver times and enroute block speeds; elimination of delays

   - Air traffic control and instrument displays for tight-turn procedures in takeoff and landing
   - Reliability, maintainability

3. - Control system types, fly-by-wire, etc.
   - Translational command versus attitude command
   - Use of throttlable gas generators for hover control system
   - Human factor review of pilot tasks and display requirements

4. - Power plant integration/propulsion system reingestion
   - Stability and Control aspects of Aero/Propulsive force interaction (configuration problem)

5. - Advanced structural materials
   - Gust alleviation, ride improvement
   - High lift (with and without propulsion power assist)
   - Propulsive lift versus aerodynamic lift
   - Terminal pad surface material

6. Specific to certain concepts:
   - Thrust deflection of bypass engines
   - Convertible fan engines
   - Increased life/cycle lift engines
   - Development time and cost of concepts and propulsion systems

5.2 Areas of Research and Further Study— Market/Vehicle Economics

General

1. - Traffic stimulants in short-haul market
   - Market penetration factors (specifically short haul)
   - Effect of convenience, passenger preference
2. - Geopolitical implications of city operation
   - Government influence
   - Future plans for terminal access and city connection
3. - Type of operator and operation
   - Pros and cons of multimode terminal location
   - Effect of high speed ground transportation

Specific

1. - Passenger travel habits and motivation in specific markets
   - Origin and destination data, city-pair data
   - Timing and growth of specific markets
2. - Competitive systems analysis
   - Cost and time of surface access to airport terminal
3. - Terminal design
   - Maintenance costs of various lift systems
   - Financial return to industry, manufacturer to develop a V/STOL system

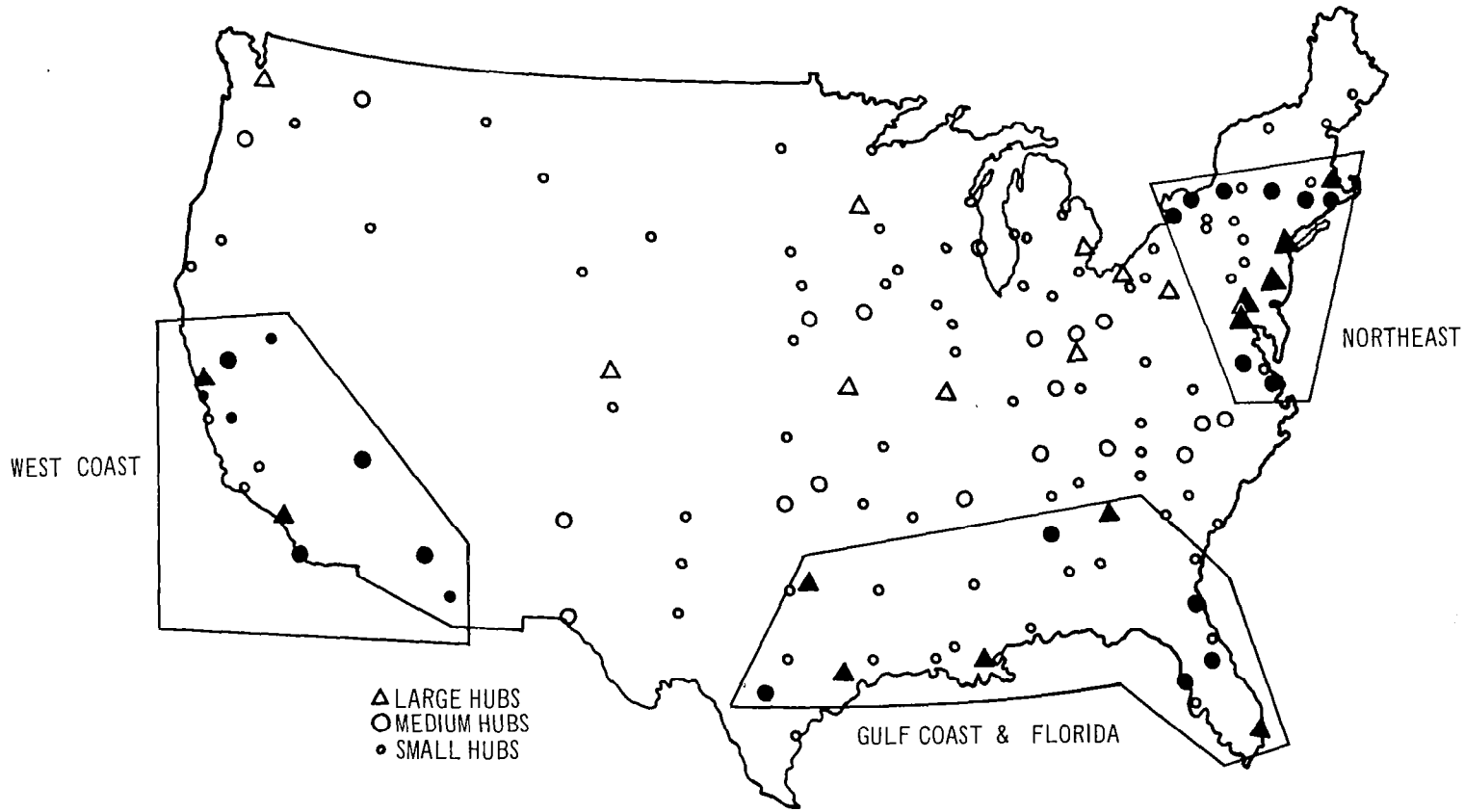

Figure 1: Selected Cities in Each Transportation System

6.0 SUMMARY OF RESULTS

A summary of the results of the major areas of the study are presented in this section. Expansion of each of these subjects is to be found in the corresponding sections of the main body of the report.

6.1 Study Transportation Systems

Three intercity transportation systems postulated for this study are shown in fig. 1. They are systems that link at least the ten leading cities in each region.

At most city locations the size of the traffic flow postulated for the 1985 period requires only one terminal, either VTOL or STOL, and this is considered as located in the best relevant area according to the definition of the concept "downtown" or "suburb."

In the larger cities (only 5 of the 33 studied) where more than one terminal is required because of either density of traffic or convenience of service, the suggested locations are chosen to represent the best compromise between convenience, disturbance to the community, and access to other transportation systems.

Estimates are made of total potential traffic flow for the V/STOL system in 1985 for various fare levels where elasticity of demand factors are included that recognize the influence of gross national product, average airline yield, average speed, and number of departures on demand. The base level for the V/STOL system reflects a market size that is approximately 25% larger than it would be if the effect of penetration of the surface transportation market because of the additional service offered had not been included. A higher level of traffic (an additional 40% larger), implying considerably more penetration, was also established where the additional convenience of this V/STOL service also was recognized. This latter level is presented only as part of a sensitivity study of market size, because considerably further analysis is required to substantiate the specific reaction of the market to this additional convenience. It is shown, however, that the absolute size of the market does not significantly change the conclusions concerning the principal objectives of the study.

A minimum level of service is postulated between each of the various sizes of city and between each of the specific locations of the terminals in the multi-terminal cities. This level is considered to be representative of an economically viable system. Generally if the predicted traffic does not support the minimum frequencies (10 departures per day) at 60% load factor in a 120-passenger aircraft, then that particular city-pair link is not considered part of the system.

The distribution of traffic flow between cities for various city-pair distances in each region is plotted in figs. 2 through 4. In the Northeast region several city-pairs are grouped in certain range categories for ease of illustration. The distinctive characteristics of traffic demand within each region are readily apparent from these figures.

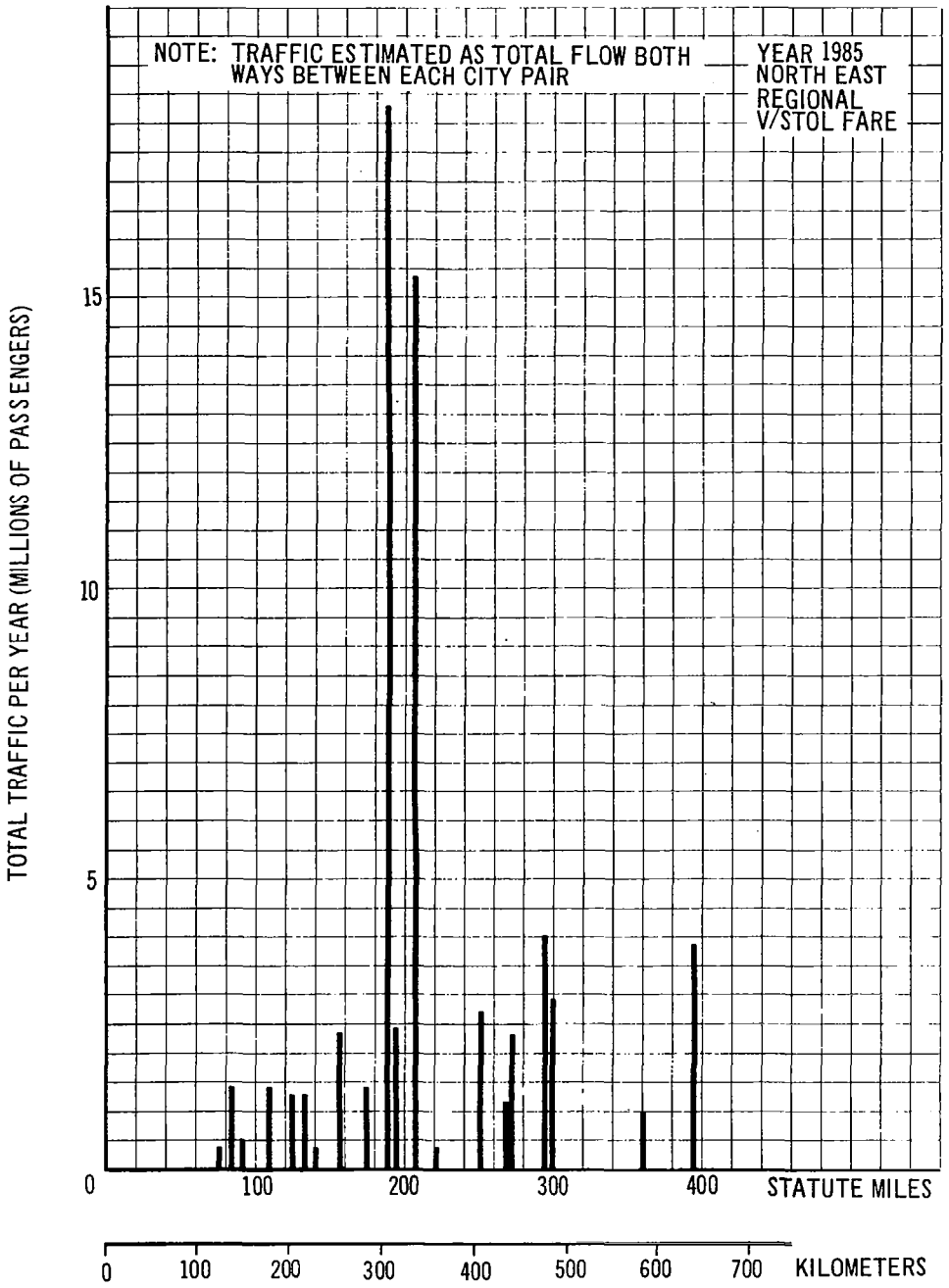

Figure 2: Total City-Pair Traffic Northeast—1985

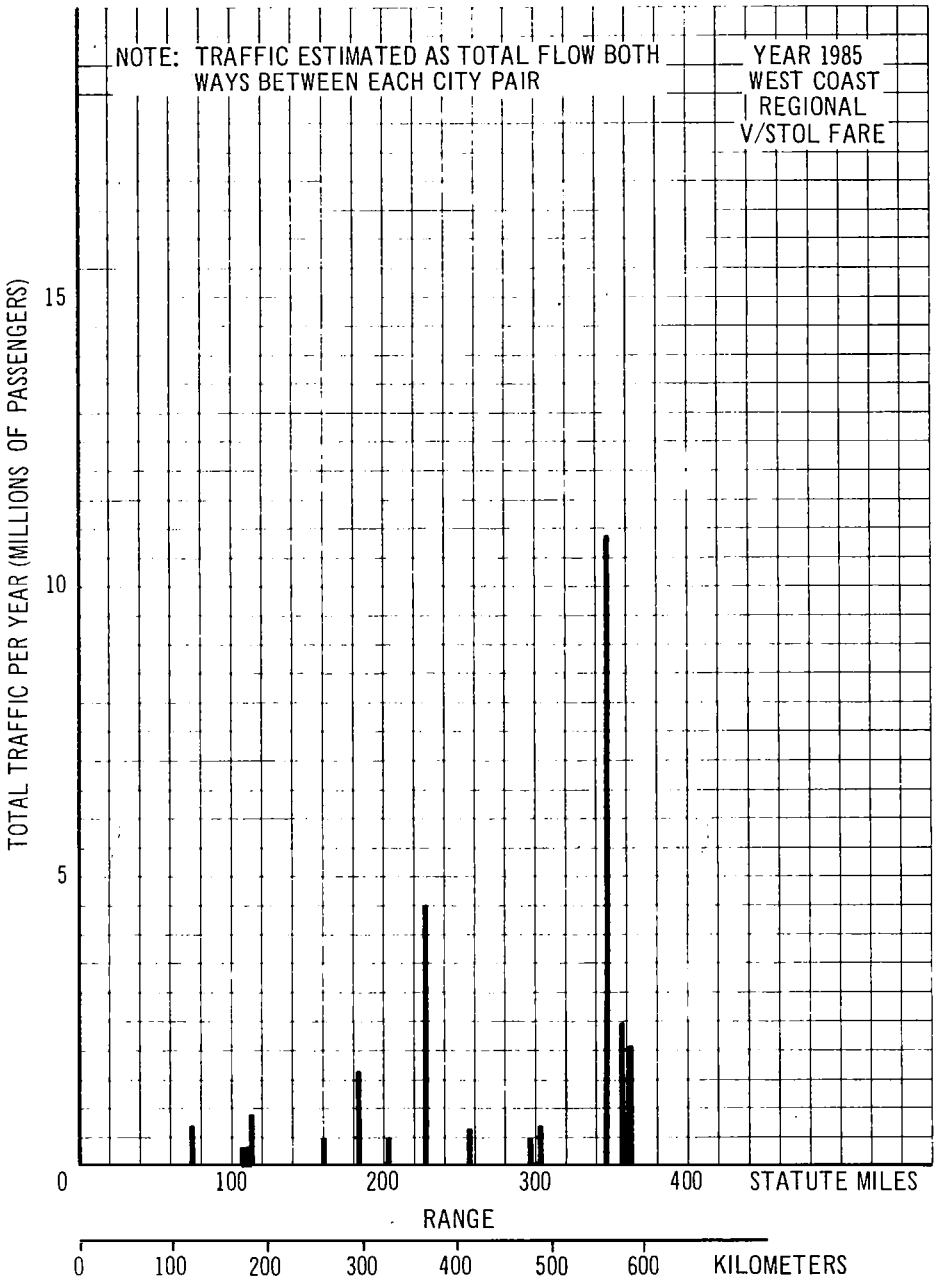

Figure 3: Total City-Pair Traffic West Coast—1985

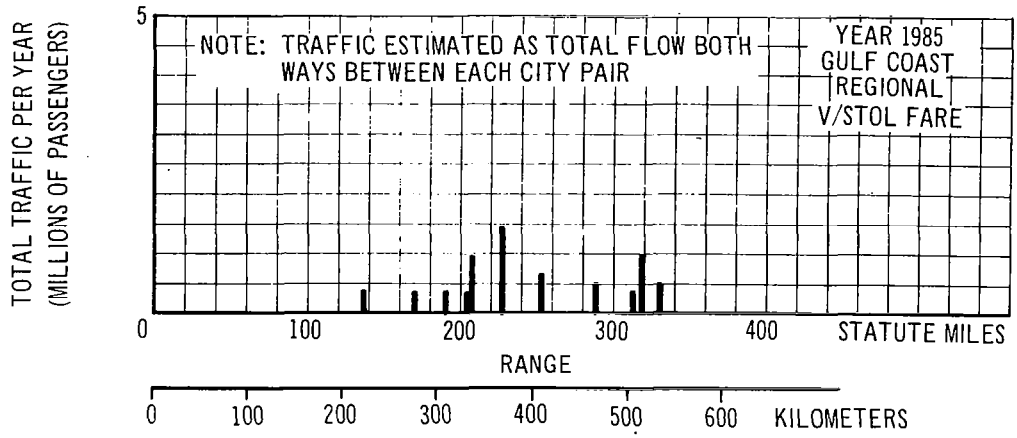

Figure 4: Total City-Pair Traffic Gulf Coast—1985

6.2 Advanced Technology

Prior to determining the principal design characteristics of the various vehicles, levels of technology in the various design and operational areas were established that are consistent with the study requirement of consideration of the transportation system in the year 1985.

Generally, from the detailed reviews in the respective areas, the following major improvements from current levels are postulated:

- Profile drag reduced by 10%.
- Drag divergence Mach number increased by 10%.
- Allowable placard speed increased by 20% for same comfort level.
- Usable lift coefficient for STOL approach increased more than 100%.
- Rotor aircraft lift-to-drag ratio increased approximately 100%.
- Powerplant weights reduced by 30% to 50%.
- Structure weights reduced by 30% to 36%.
- Equipment weights reduced by approximately 15% to 30%.
- Reduction in level of perceived noise from rotors of 10 PNdB and reduction from lift and cruise engines as much as 15 PNdB.
- Increase in avionic equipment reliability approximately 2000-fold.
- Reduction in volume of avionic equipment to approximately 1/100th.
- The possibility of substantially reduced air maneuver times occasioned by advanced displays and use of computer techniques in air traffic control procedures.
- Increase in reliability, usable life, and time between overhaul of lift system components.

NOTE: No fuel consumption improvement is postulated.

6.3 Study Concepts and Configurations

Nine different concepts involving twelve different configurations are analyzed in this study, displaying various VTOL, STOL, and CTOL capabilities (figs. 5 through 12).

During the preliminary phases of the study various design factors were exercised, and the aircraft summarized here represent the designs of each concept that best match the postulated transportation system requirements.

Throughout this study the terms "downtown" and "suburb" when applied to designs are generally to imply the following capabilities. "Downtown" indicates the ability to operate from the center of traffic generating areas or downtown areas, where the terminal dimensions are a maximum of 1700 by 600 ft; whereas "suburb" indicates the ability to operate from a terminal geographically located somewhere between the center of the traffic generating area and the conventional airport, which is generally an appreciable distance from the center of the community. The suburb terminal dimensions are considered to be approximately 2200 by 600 ft. Finally, the term CTOL is applied to an aircraft that makes conventional takeoff and landing approaches into a field at least 6000 ft long.

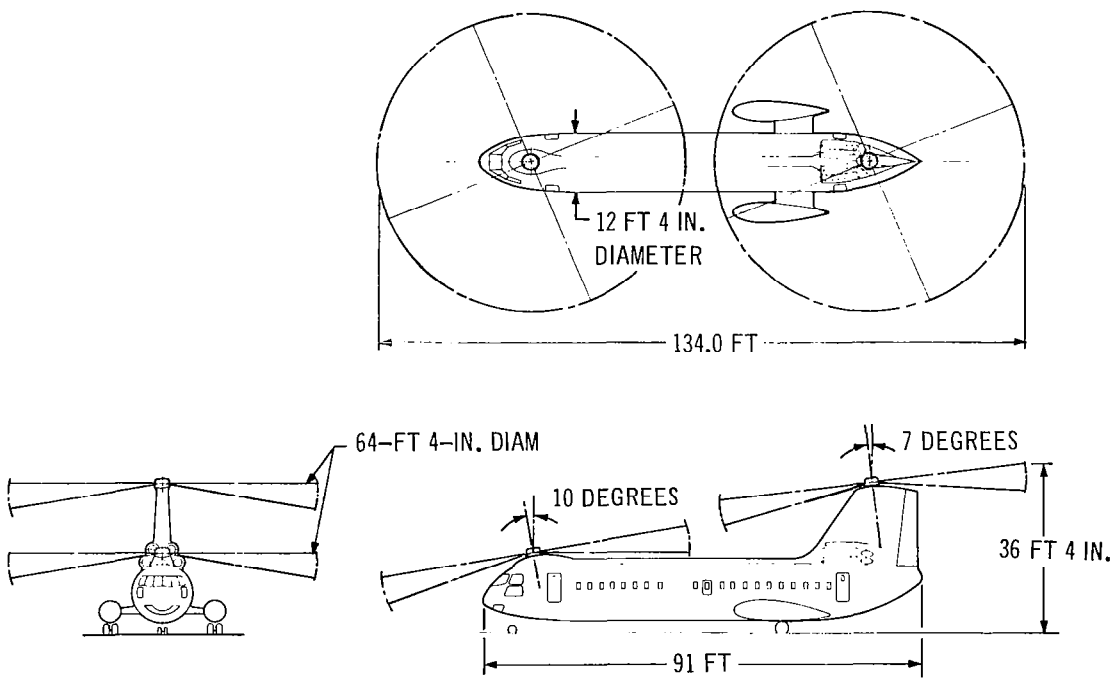

Figure 5: Helicopter VTOL—120-Passenger Capacity

TANDEM ROTORS ARE POWERED BY FOUR TURBOSHAFT ENGINES. THRUST OFFSET IS USED TO UNLOAD THE RETREATING BLADES AT HIGH SPEED AND THUS AVOID BLADE STALL. THE ROTORS INCORPORATE BOUNDARY LAYER CONTROL TO PERMIT OPERATION AT HIGH LIFT COEFFICIENTS WHEN THE ROTORS ARE SLOWED DOWN AND LIFT IS TRANSFERRED TO THE ADVANCING BLADES IN CRUISE.

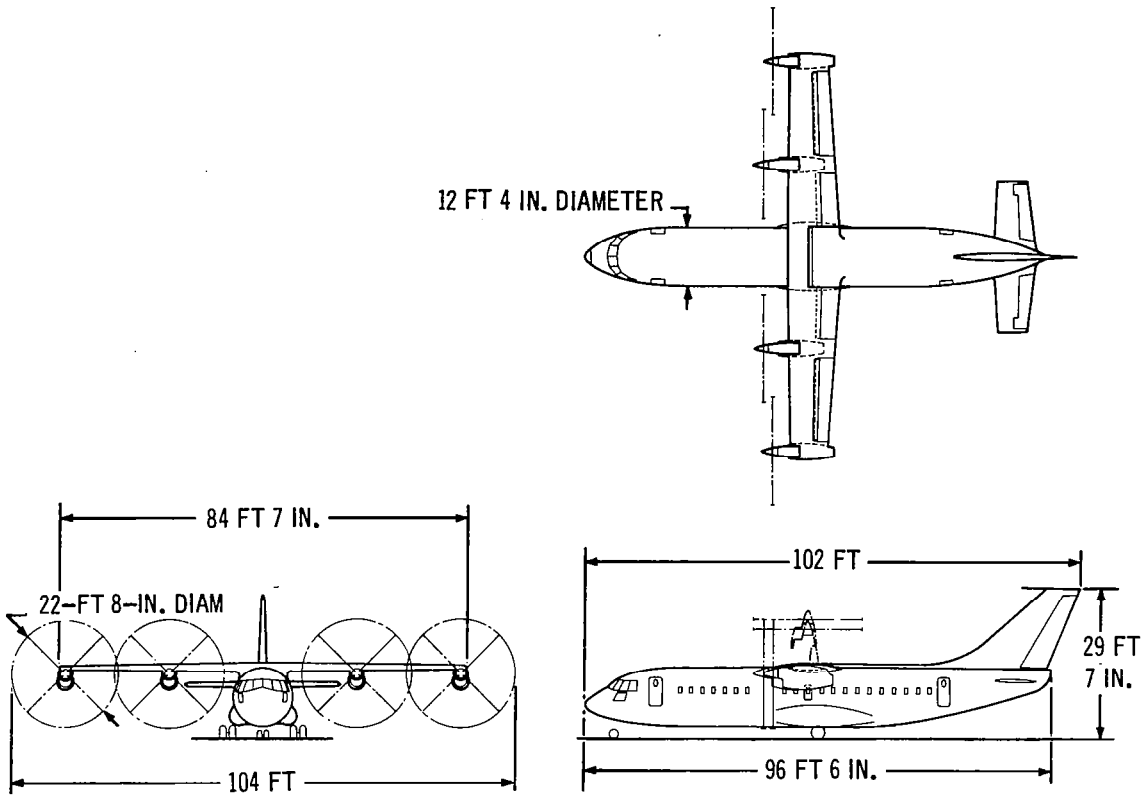

Figure 6: Tilt-Wing VTOL—120-Passenger Capacity

FOUR PROPELLERS DRIVEN BY FOUR INTERCONNECTED TURBOSHAFT ENGINES SUPPLY THE POWER FOR HOVER AND TILT FORWARD WITH THE WING TO SUPPLY CRUISE POWER. THE COMPLETE VERTICAL TAKEOFF SYSTEM IS CONTAINED WITHIN THE WING; THERE IS NO TAIL ROTOR, TAIL SHAFTING OR AFT GEAR BOX. IN HOVER, PITCH CONTROL IS PROVIDED BY MONOCYCLIC CONTROL AUGMENTED BY WING TILT LINKED TO LONGITUDINAL STICK MOTION, YAW CONTROL BY A SPOILER DEFLECTION SYSTEM, AND ROLL CONTROL BY DIFFERENTIAL COLLECTIVE PROPELLER ANGLE.

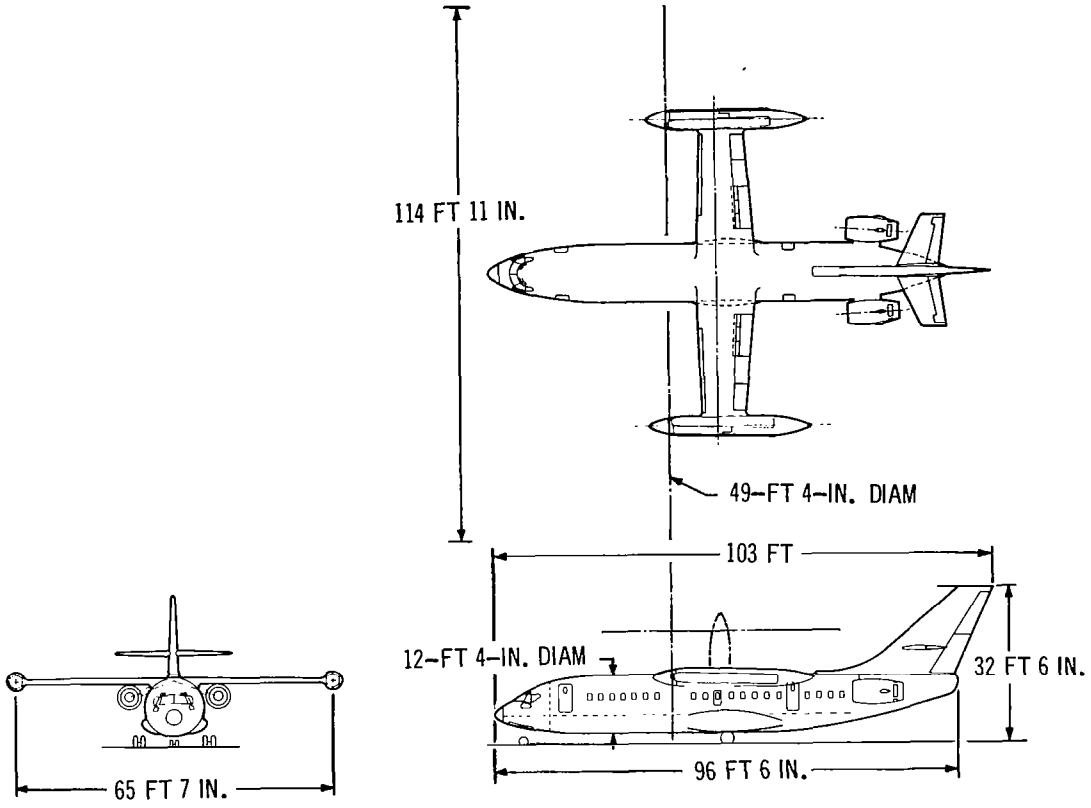

Figure 7: Folding Tilt Rotor VTOL—120-Passenger Capacity

LIFT IS SUPPLIED BY THE ROTORS DURING HOVER AND TRANSITION. FOR CONVENTIONAL FLIGHT THE ROTORS ARE FEATHERED, STOPPED AND THE BLADES FOLDED REARWARD INTO WING TIP NACELLES. CONVERTIBLE FAN ENGINES PROVIDE SHAFT POWER FOR THE ROTOR DRIVE SYSTEM AND CONVERT TO GIVE FAN THRUST FOR THE CONVENTIONAL FLIGHT MODE.

VTOL-FAN-IN-WING (CONCENTRIC)

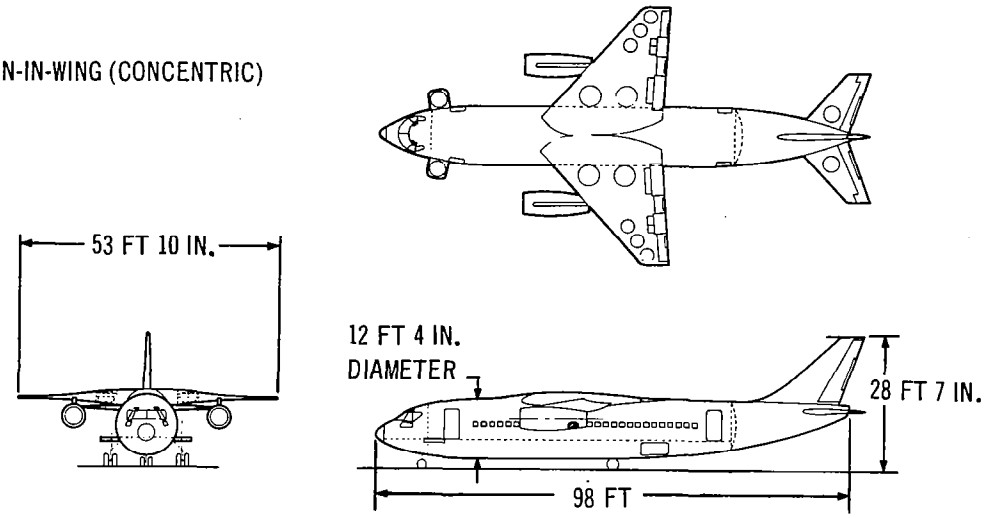

FOUR LIFT FANS OF BYPASS RATIO 10 ARE BURIED IN THE WING ROOTS AND TAKE THEIR POWER FROM CONCENTRICALLY MOUNTED GAS GENERATORS. THESE PLUS THE DEFLECTED THRUST FROM THE TWO CRUISE ENGINES SUPPLY THE POWER FOR HOVER. TWO GAS GENERATORS IN THE AFT FUSELAGE SUPPLY AIR TO POWER THE TIP DRIVEN CONTROL FANS IN THE WING TIPS, NOSE AND TAIL FOR CONTROL DURING HOVER.

VTOL-FAN-IN-WING (TIP DRIVEN)

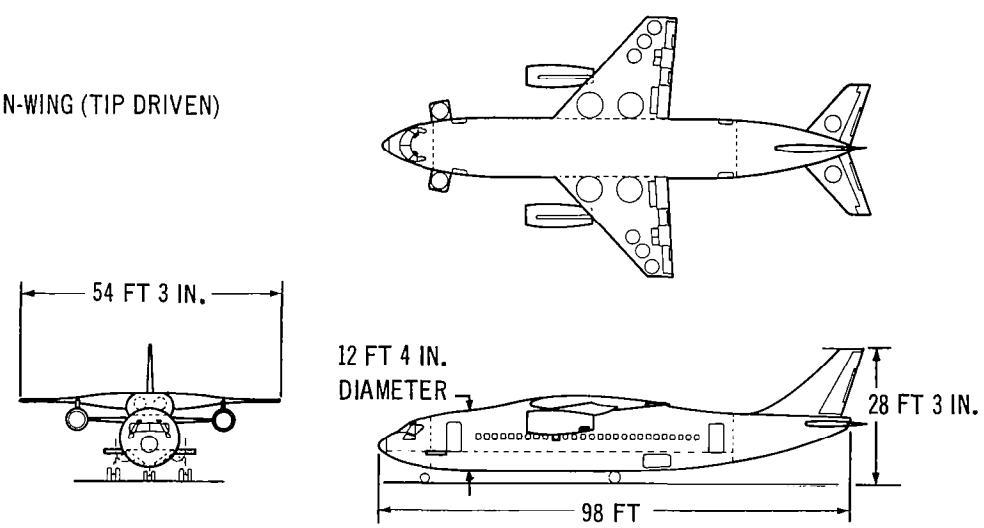

FOUR GAS GENERATORS, HOUSED IN A FAIRING OVER THE FUSELAGE CENTER SECTION, ARE CROSS-DUCTED TO OPPOSING TIP DRIVEN LIFT FANS BURIED IN THE WING ROOTS. THESE GAS GENERATORS ARE OVERSIZED IN ORDER TO SUPPLY AIR TO POWER THE TIP DRIVEN CONTROL FANS IN THE WING TIPS, NOSE AND TAIL FOR CONTROL POWER DURING HOVER. THE THRUST FROM THE CRUISE ENGINES IS DEFLECTED DOWNWARD TO ADD TO THE THRUST FROM THE LIFT FANS IN HOVER.

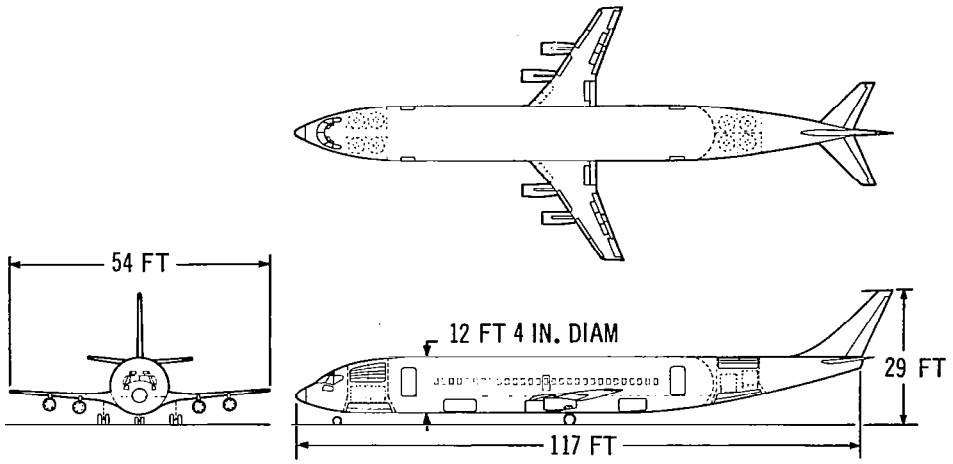

Figure 9: Jet Lift VTOL—120-Passenger Capacity

VERTICAL TAKEOFF IS ACCOMPLISHED WITH THE USE OF EIGHT AUXILIARY LIFT ENGINES IN THE BODY, PLUS THE DEFLECTED THRUST OF THE FOUR CRUISE ENGINES. CONTROL IN THE VERTICAL MODE IS BY DIFFERENTIAL ENGINE THRUST. THE HIGH WING LOADING ALLOWS SMOOTH, EFFICIENT, HIGH SPEED CRUISE.

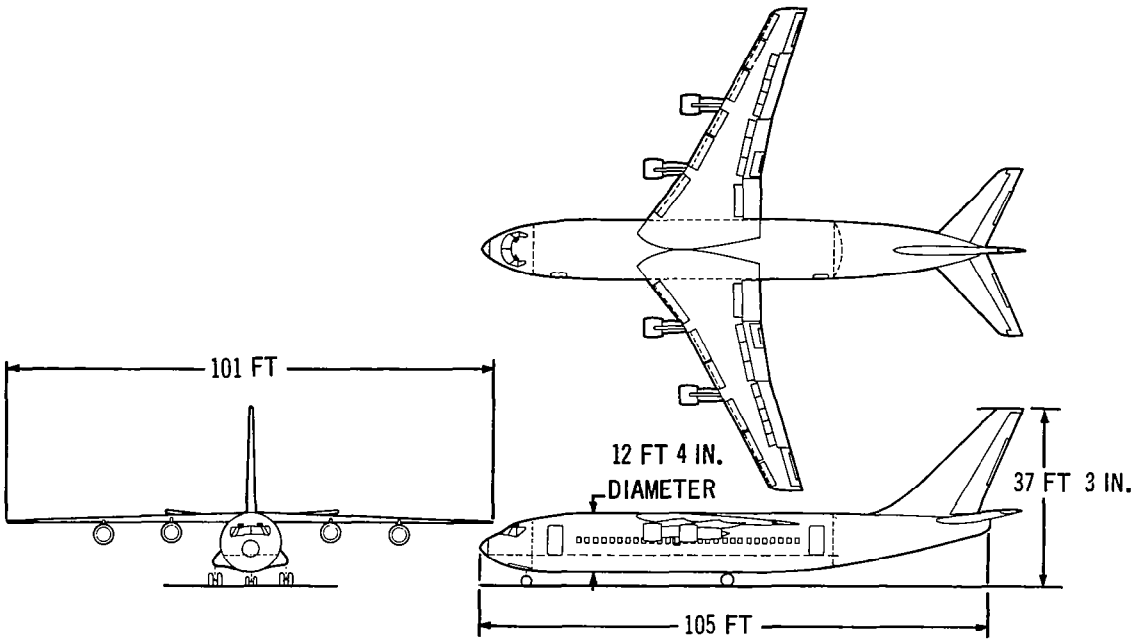

Figure 10: High Lift STOL—120-Passenger Capacity

EXTERNALLY BLOWN FLAPS ARE THE RELATIVELY SIMPLE HIGH LIFT DEVICES USED TO OBTAIN STOL PERFORMANCE. THE AFT SEGMENT OF THE INBOARD FLAPS ARTICULATE WITH THROTTLE MOVEMENT TO PROVIDE GLIDE PATH CONTROL. TWO DIFFERENT DESIGN WING LOADINGS ARE USED WITH THIS CONCEPT TO PROVIDE TWO DIFFERENT DESIGN FIELD LENGTHS.

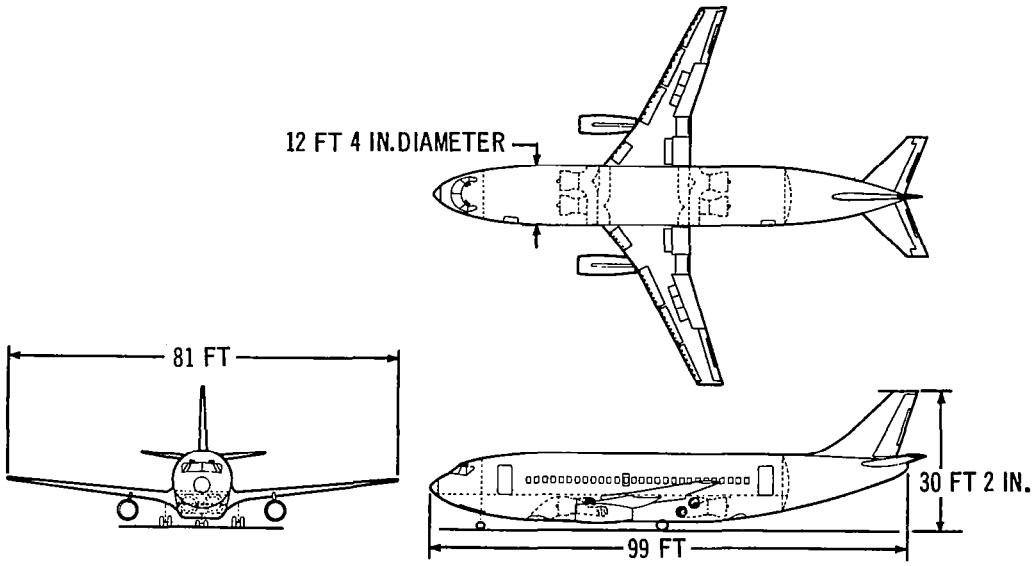

Figure 11: High Acceleration STOL—120-Passenger Capacity

FOUR AUXILIARY ENGINES ARE MOUNTED BENEATH THE FLOOR IN THE FUSELAGE TO PROVIDE ADDITIONAL THRUST FOR ACCELERATION IN TAKEOFF, LIFT ON APPROACH, AND THRUST FOR DECELERATION AFTER LANDING. CONTROL IS SUPPLIED BY CONVENTIONAL AERODYNAMIC DEVICES IN THE STOL MODE.

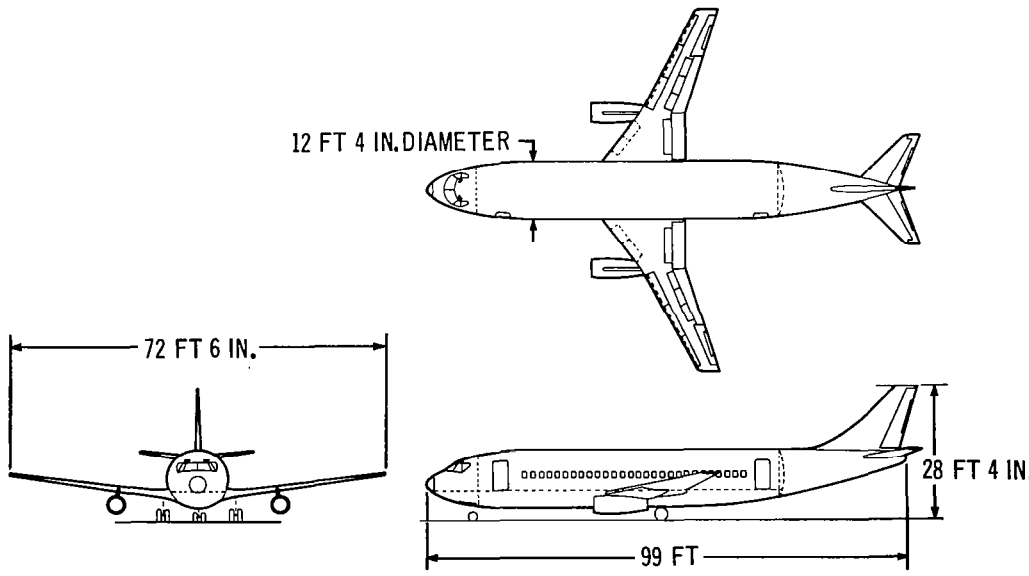

Figure 12: Conventional CTOL—120-Passenger Capacity

THIS AIRPLANE IS SIMILAR TO THE HIGH SPEED SHORT HAUL AIRCRAFT OF TODAY WITH THE 1985 TECHNOLOGY IN AERODYNAMICS, ENGINES AND STRUCTURES APPLIED.

Throughout the report the design field length descriptions accompanying the titles of the various STOL designs are generally written as a basic single number in feet. However, it should be recognized that, depending on the rules used to define design field length, the actual field performance can differ from this number by several hundred feet. The basic number defines the maximum distance required.

Table 1 summarizes the general characteristics of all concepts in addition to the propulsion system details. Tables 2 and 3 present the weight summary for each concept for two typical design capacities.

6.4 Operating Costs

Both direct and indirect operating cost estimates are made as a result of component-by-component analysis of both the aircraft and the transportation system. Table 4 shows the total aircraft acquisition price and also breaks down the total price to airframe, cruise engines, and lift engines.

6.4.1 Direct Operating Costs.—The direct operating cost estimates for the basic mission assumptions are shown in figs. 13 through 15 for each size configuration analyzed. The usual decreasing trend of DOC level with increasing airplane design capacity is evident, but of more importance is the resulting smaller differences in DOC value between concepts as design capacity is increased. This suggests, for sake of comparison, the consideration of the operating cost difference between groups of concepts and associated environment, as more readily discernible, than between specific concepts.

6.4.2 Indirect Operating Costs.—Typical indirect operating cost estimates for the postulated transportation system are shown in figs. 16 and 17.

The basic estimates as shown in fig. 16 include the allocation of the full depreciation costs of the VTOL and STOL terminal facilities (not including the land); whereas the CTOL allocation is determined as a mean between the current levels of U.S. domestic trunk operators and the local service airlines.

The variation in IOC level between each of the VTOL concepts and between each of the STOL concepts is negligible, hence the narrow band to cover several concepts.

If the V/STOL terminal facilities depreciation charge is reduced to the same magnitude as that for the CTOL, the IOC levels are as shown in fig. 17.

Table 1: General Characteristics Summary

	Concentric Fan	Jet Lift	Hi-Accel STOL	Hi-Lift (w/s=60) STOL	Hi-Lift (w/s=90) STOL	CTOL (6 Min.=AMT)	Folding Tilt Rotor	Tilt Wing	Helicopter
Design Field Length* (ft)	VTOL	VTOL	1680	1650	2200	6000	VTOL	VTOL	VTOL
$C_{L_{MAX}}$	2.0	3.3	4.7	6.7	6.7	3.3	2.3	---	---
w/s	100/85/80	180/170/165	100	60	90	105	120	100	---
Disc Loading (psf)	---	---	---	---	---	---	22	50	13.3
Aspect Ratio	3.5/3.2/3.1	7	8.5	8.5	8.5	8.5	6.08	9.1	---
Λ C/4 (deg)	35	30	25	25	25	25	0	0	---
(t/c) Average	0.105	0.105	0.105	0.105	0.105	0.105	0.100	0.140	---
No. of Rotors	---	---	---	---	---	---	2	4	2
No. of Blades/Rotor	---	---	---	---	---	---	3	3	4
Solidity	---	---	---	---	---	---	0.09	0.226	0.093
Tip Speed (fps)	---	---	---	---	---	---	830	850	740
No. of Cruise Engines	2	4	2	4	4	2	2	4	4
Cruise T/W	0.45	0.34	0.31	0.37	0.37	0.33	0.398	---	---
No. of Lift Engines	4	8	4	---	---	---	---	---	---
Lift T/W	0.554	1.137	0.905	---	---	---	---	---	---
No. of Gas Generators for Reaction Control	2	---	---	---	---	---	---	---	---
Reaction Control T/W	0.3	---	---	---	---	---	---	---	---
Total T/W	1.304	1.477	1.215	0.37	0.37	0.33	0.398	---	---
Placard (KEAS)	420	430	430	300	400	430	430	400	250
N_{GUST} (max at V_{MO})	2.41	2.22	3.18	2.90	3.13	3.21	2.69	2.90	---
M_{cruise}	0.96	0.93	0.9	0.745	0.9	0.9	0.87	0.777	0.412
M_{CRIT}	0.953	0.911	0.903	0.903	0.902	0.901	0.886	0.775	---
$V_{APPROACH}$(KEAS)	---	---	73	67	79	126	---	---	---
$V_{CONVERSION}$ (KEAS)	154	161	103	---	---	---	158	150	---
Payload/GW	0.337	0.357	0.335	0.365	0.370	0.390	0.285	0.3	0.317

*One engine out
89°F

	Design Capacity									
Cruise Thrust in lb (or HP) per Engine	90 120 200	13 500 16 900 26 700	4 760 6 020 9 550	9 230 11 700 18 600	5 170 6 570 10 420	5 000 6 290 10 000	8 500 10 600 17 000	13 100 16 610 27 210	5 910(HP) 7 450(HP) 12 310(HP)	3 750(HP) 4 320(HP) 5 950(HP)
Thrust per Lift Engine (lb)	90 120 200	8 310 10 400 16 400	8 000 10 000 15 930	13 450 17 100 27 050	---	---	---	---	---	---
Rotor Diameter (ft)	90 120 200	---	---	---	---	---	---	45 49 63	20 23 29	58 64 88
Overall Length (ft)	90 120 200	86 101 147	106 123 140	86 101 147	88 111 152	88 111 152	86 101 147	85 103 134	84 102 132	115 134 173
Wing Span (ft)	90 120 200	48 54 64	50 54 65	71 81 100	89 101 125	71 82 100	64 72 90	58 65 84	76 86 110	--- --- ---

Table 2: Weight Summary—All Concepts, 120-Passenger Capacity

	120 PASSENGERS							
	Conventional	STOL Hi-Accel	STOL Hi-Lift 1650 F. L.	STOL Hi-Lift 2200 F. L.	VTOL Jet Lift	VTOL Concentric Fan-In-Wing	VTOL Folding Tilt Rotor	VTOL Tilt Wing
Wing	3 650	5 000	7 670	5 250	2 550	3 180	3 560	4 400
Rotor							5 190	
Tail	1 200	1 430	2 220	1 720	810	1 330	1 820	1 700
Body	7 370	8 220	7 740	7 690	8 730	7 520	7 580	8 190
Landing Gear	2 000	2 460	2 590	2 500	2 290	2 480	2 770	2 590
Nacelles	890	5 630	1 140	1 100	2 760	2 990	1 870	1 360
(Structure)	(15 110)	(22 740)	(21 360)	(18 260)	(17 140)	(17 500)	(22 790)	(18 240)
Lift Fans						3 140		
Cruise Engines	2 060	2 280	2 450	2 370	2 250	3 140	3 270	3 010
Lift Engines		3 030			3 530			
Engine Controls	60	140	120	120	360	180	200	200
Fuel System	750	590	550	570	570	600	590	590
Starting System	120	180	240	240	360	180	120	240
Lubrication System							50	80
Propellers							*110	3 890
Drive System							6 590	4 540
(Powerplant)	(2 990)	(6 220)	(3 360)	(3 300)	(7 070)	(7 240)	(10 930)	(12 550)
Instruments	540	570	550	550	620	570	540	540
Flight Controls	1 010	1 070	2 080	1 700	940	1 200	3 470	4 220
Hydraulics	250	350	370	310	320	310	380	400
Electrical	1 570	1 570	1 570	1 570	1 570	1 570	1 570	1 570
Electronics	540	540	540	540	540	540	540	540
Furnishings	6 780	7 230	6 850	6 850	7 380	6 960	7 150	7 150
Air Cond., Anti-Ice	1 770	1 820	1 800	1 800	1 900	1 820	1 940	1 940
APU	770	770	770	770	770	770	770	770
Aux Gear Grp	40	40	40	40	40	40	40	40
Reaction Control						3 280	280	
(Fixed Equipment)	(13 270)	(13 960)	(14 570)	(14 130)	(14 080)	(17 060)	(16 680)	(17 170)
Weight Empty	31 370	42 920	39 290	35 690	38 290	41 800	50 400	47 960
Crew and Baggage	660	660	660	660	660	660	660	660
Unusable Fuel & Oil	390	490	470	470	690	490	390	470
Passenger Service	790	790	790	790	790	790	790	790
(Useful Load)	(1 840)	(1 940)	(1 920)	(1 920)	(2 140)	(1 940)	(1 840)	(1 920)
Operating Wt. Empty	33 210	44 860	41 210	37 610	40 430	43 740	52 240	49 880
Passengers	19 800	19 800	19 800	19 800	19 800	19 800	19 800	19 800
Luggage & Cargo	4 200	4 200	4 200	4 200	4 200	4 200	4 200	4 200
Fuel	7 410	6 800	5 900	6 430	6 470	7 650	7 320	6 720
Gross Weight	64 620	75 660	71 110	68 040	70 900	75 392	83 560	80 600

Conversion factor for international units (lb x .454 = kg)

*Exhaust & Cooling

Table 3: Weight Summary—All Concepts, 200-Passenger Capacity

200 PASSENGERS

	Conventional	STOL Hi-Accel	STOL Hi-Lift 1650 F. L.	STOL Hi-Lift 2200 F. L.	VTOL Jet Lift	VTOL Concentric Fan-In-Wing	VTOL Folding Tilt Rotor	VTOL Tilt Wing	VTOL Helicopter
Wing	6 340	8 500	12 550	8 720	4 340	5 420	6 850	7 690	
Rotor							9 660		7 690
Tail	2 070	2 350	3 630	2 790	1 360	1 920	2 700	2 680	*420
Body	11 220	12 600	11 500	11 430	13 520	11 460	11 900	13 040	8 500
Landing Gear	3 130	3 830	4 050	3 900	3 660	3 980	4 700	4 270	2 560
Nacelles	1 330	9 090	2 050	1 980	5 040	4 420	3 360	2 160	500
(Structure)	(24 090)	(36 370)	(33 780)	(28 820)	(27 920)	(27 200)	(39 170)	(29 840)	(19 670)
Lift Fans						3 940			
Cruise Engines	3 130	3 430	3 840	3 690	3 590	5 060	6 040	4 700	2 900
Lift Engines		4 720			5 640				**200
Engine Controls	60	140	120	120	360	180	200	250	180
Fuel System	850	690	660	690	690	740	750	750	800
Starting System	120	180	240	240	360	180	120	240	240
Lubrication System							80	120	100
Propellers								7 250	1 800
Drive System							12 140	8 400	11 740
(Powerplant)	(4 160)	(9 160)	(4 860)	(4 740)	(10 640)	(10 100)	(19 330)	(21 710)	(17 960)
Instruments	540	570	550	550	620	570	540	540	540
Flight Controls	1 230	1 300	2 960	2 370	1 040	1 350	6 510	7 910	8 850
Hydraulics	390	540	590	490	510	490	630	660	400
Electrical	1 750	1 750	1 750	1 750	1 750	1 750	1 750	1 750	1 750
Electronics	550	550	550	550	550	550	550	550	550
Furnishings	11 210	11 670	11 280	11 280	11 810	11 390	11 580	11 580	11 580
Air Cond., Anti-Ice	2 100	2 180	2 140	2 140	2 280	2 180	2 340	2 340	2 340
APU	1 100	1 100	1 100	1 100	1 100	1 100	1 100	1 100	1 100
Aux Gear Grp	40	40	40	40	40	40	40	40	40
Reaction Control						6 430	500		
(Fixed Equipment)	(18 910)	(19 700)	(20 960)	(20 270)	(19 700)	(25 850)	(25 540)	(26 470)	(27 150)
Weight Empty	47 160	65 230	59 600	53 830	58 260	63 150	84 040	78 020	64 780
Crew and Baggage	800	800	800	800	800	800	800	800	800
Unusable Fuel & Oil	550	710	650	650	890	670	550	650	650
Passenger Service	1 290	1 290	1 290	1 290	1 290	1 290	1 290	1 290	1 290
(Useful Load)	(2 640)	(2 800)	(2 740)	(2 740)	(2 980)	(2 760)	(2 640)	(2 740)	(2 740)
Operating Wt. Empty	49 800	68 030	62 340	56 570	61 240	65 910	86 680	80 760	67 520
Passengers	33 000	33 000	33 000	33 000	33 000	33 000	33 000	33 000	33 000
Luggage & Cargo	7 000	7 000	7 000	7 000	7 000	7 000	7 000	7 000	7 000
Fuel	11 110	10 040	8 740	9 490	10 130	11 140	11 910	10 810	13 460
Gross Weight	100 910	118 070	111 080	106 060	111 370	117 050	138 590	131 570	120 980

*Pylon

**Air induction and exhaust
Conversion factor for international units (lb x .454 = kg)

Table 4: Airplane Acquisition Price

	Helicopter	Tiltwing	Folding tilt rotor	Fan in wing (concentric)	Fan in wing (tip drive)	Jet lift	Hi-lift STOL 1 650 ft (5 03 m)	Hi Accel STOL 1 680 ft (5 12 m)	Hi-Lift STOL 2 200 ft (6 71 m)	CTOL low maneuver time	CTOL normal maneuver time
90-PASSENGER CAPACITY											
Airframe	$1 986 410	$2 283 515	$2 319 469	$2 185 079		$1 952 617	$2 373 118	$2 363 459	$2 363 459	$1 804 116	$1 810 357
Lift Fan				206 197							
Dynamic System	384 945	279 431	383 898								
Lift Engines				384 722		893 501		524 804			
Secondary Gas Generators				174 325							
Cruise Engines	288 000	391 488	507 584	490 223		432 196	447 954	359 148	438 035	319 216	322 119
TOTAL	$2 659 355	$2 954 434	$3 210 951	$3 440 546		$3 278 314	$2 821 072	$3 247 411	$2 608 038	$2 123 332	$2 132 476
120-PASSENGER CAPACITY											
Airframe		$2 710 032	$2 648 347	$2 611 169		$2 394 912	$2 740 949	$2 825 546	$2 560 295	$2 298 273	$2 302 502
Lift Fan				238 472							
Dynamic System		352 713	463 261								
Lift Engines				406 400		961 587		568 428			
Secondary Gas Generators				209 121							
Cruise Engines		465 600	568 777	595 387		499 144	514 302	442 820	501 520	385 252	387 076
TOTAL		$3 528 345	$3 680 385	$4 060 549		$3 855 643	$3 255 251	$3 836 794	$3 061 815	$2 683 525	$2 689 578
200-PASSENGER CAPACITY											
Airframe	$3 237 876	$4 118 016	$3 944 916	$3 797 118	$3 968 968	$3 525 261	$3 931 308	$4 030 359	$3 654 323	$3 286 935	$3 293 276
Lift Fan				312 020	378 432						
Dynamic System	736 800	582 689	857 020								
Lift Engines				450 885	487 494	1 098 955		816 175			
Secondary Gas Generators				258 065	278 000						
Cruise Engines	393 600	697 392	879 912	872 060	983 054	707 797	729 408	645 582	706 072	565 175	562 265
TOTAL	$4 368 276	$5 398 097	$5 681 848	$5 690 148	$6 095 918	$5 332 013	$4 660 716	$5 492 116	$4 360 395	$3 852 110	$3 861 541

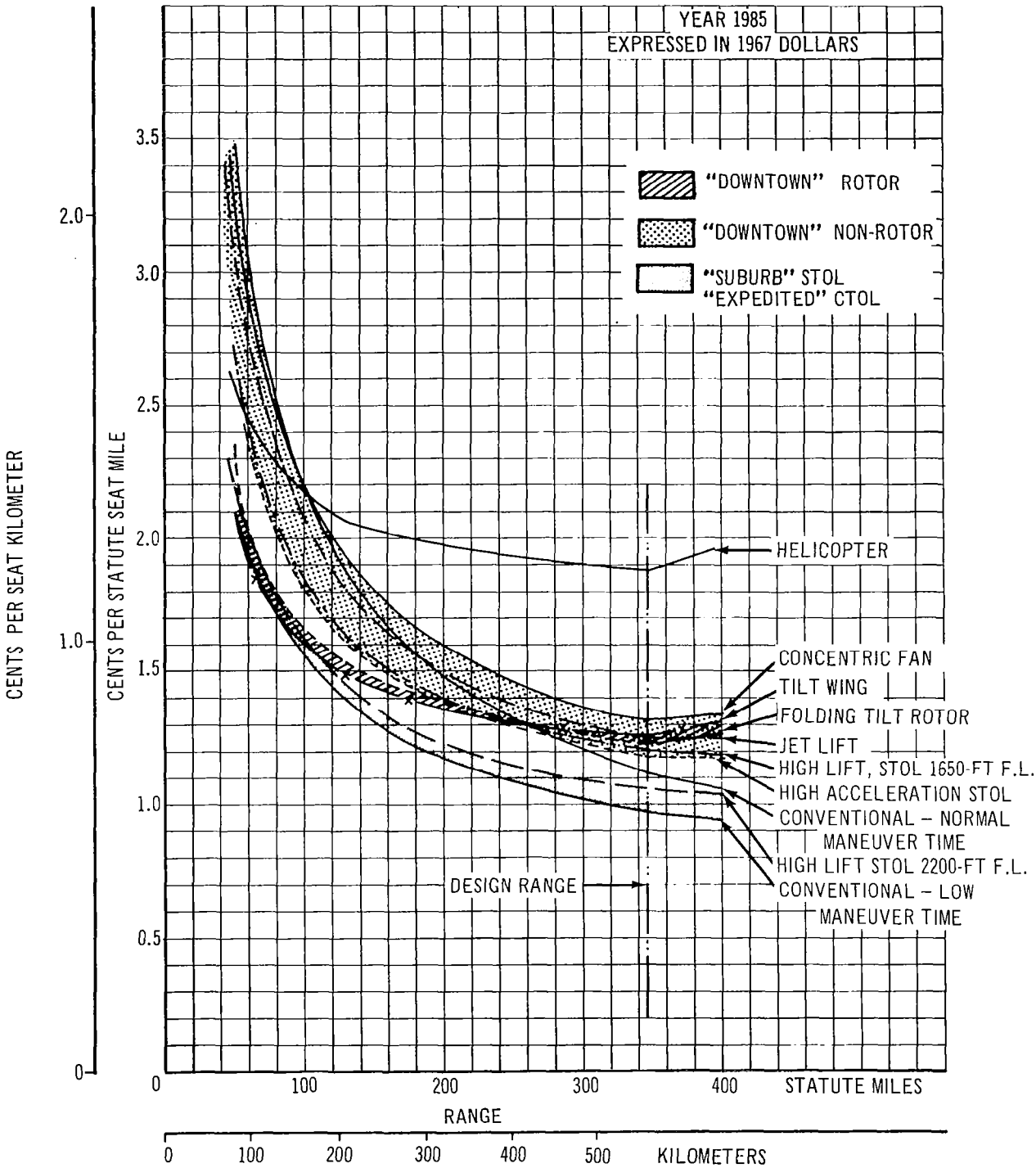

Figure 13: Direct Operating Cost—90-Passenger Capacity

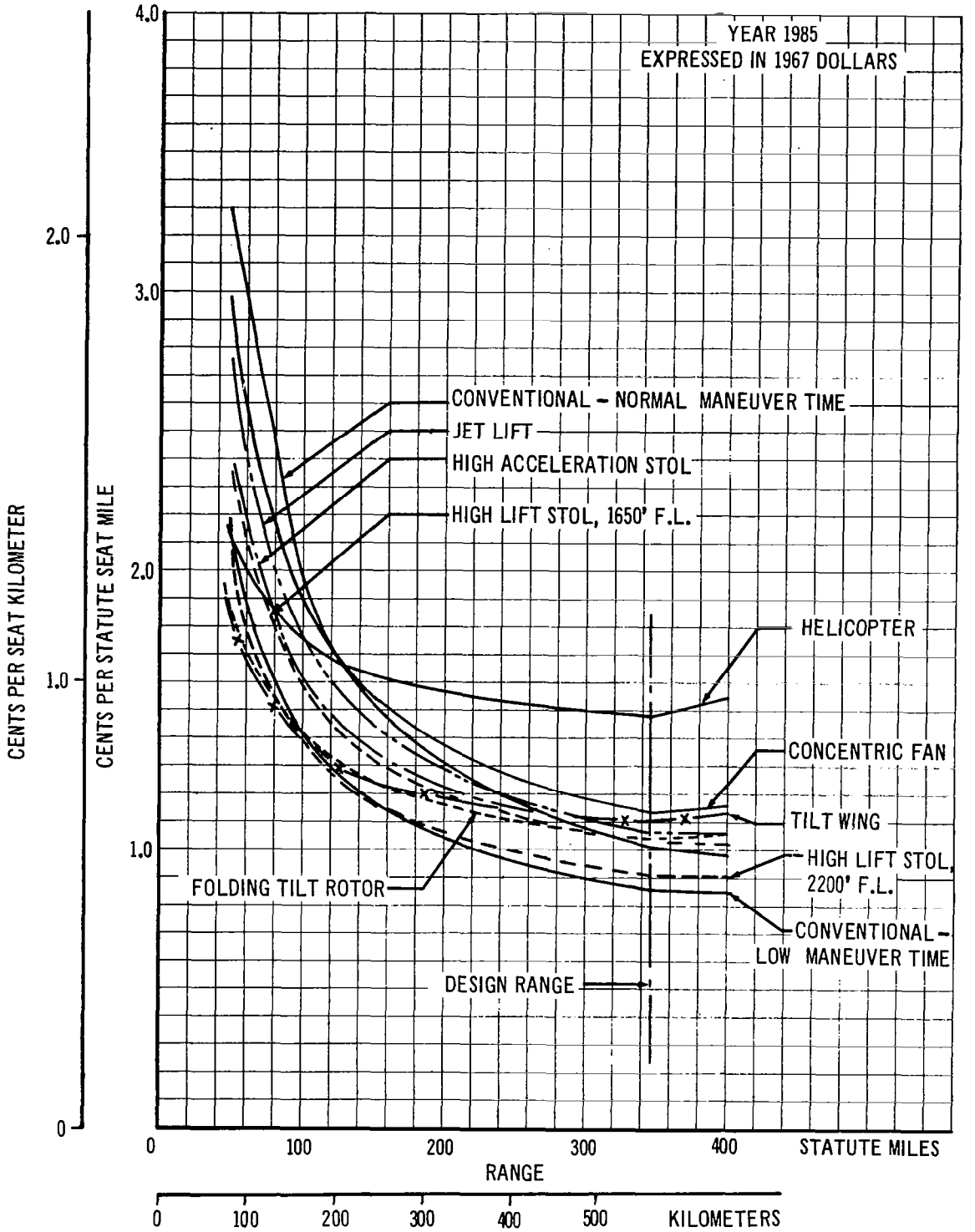

Figure 14: Direct Operating Cost—120-Passenger Capacity

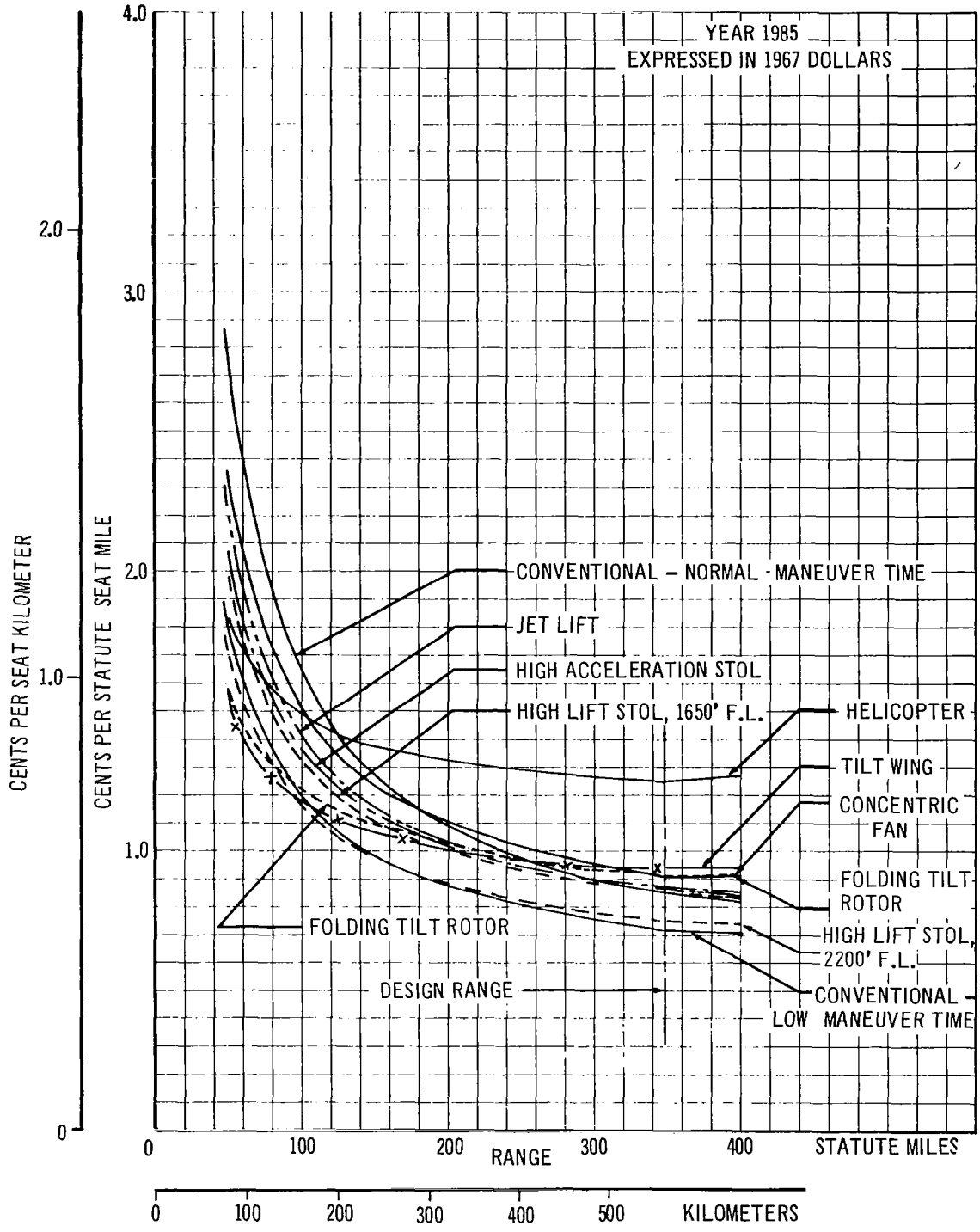

Figure 15: Direct Operating Cost—200-Passenger Capacity

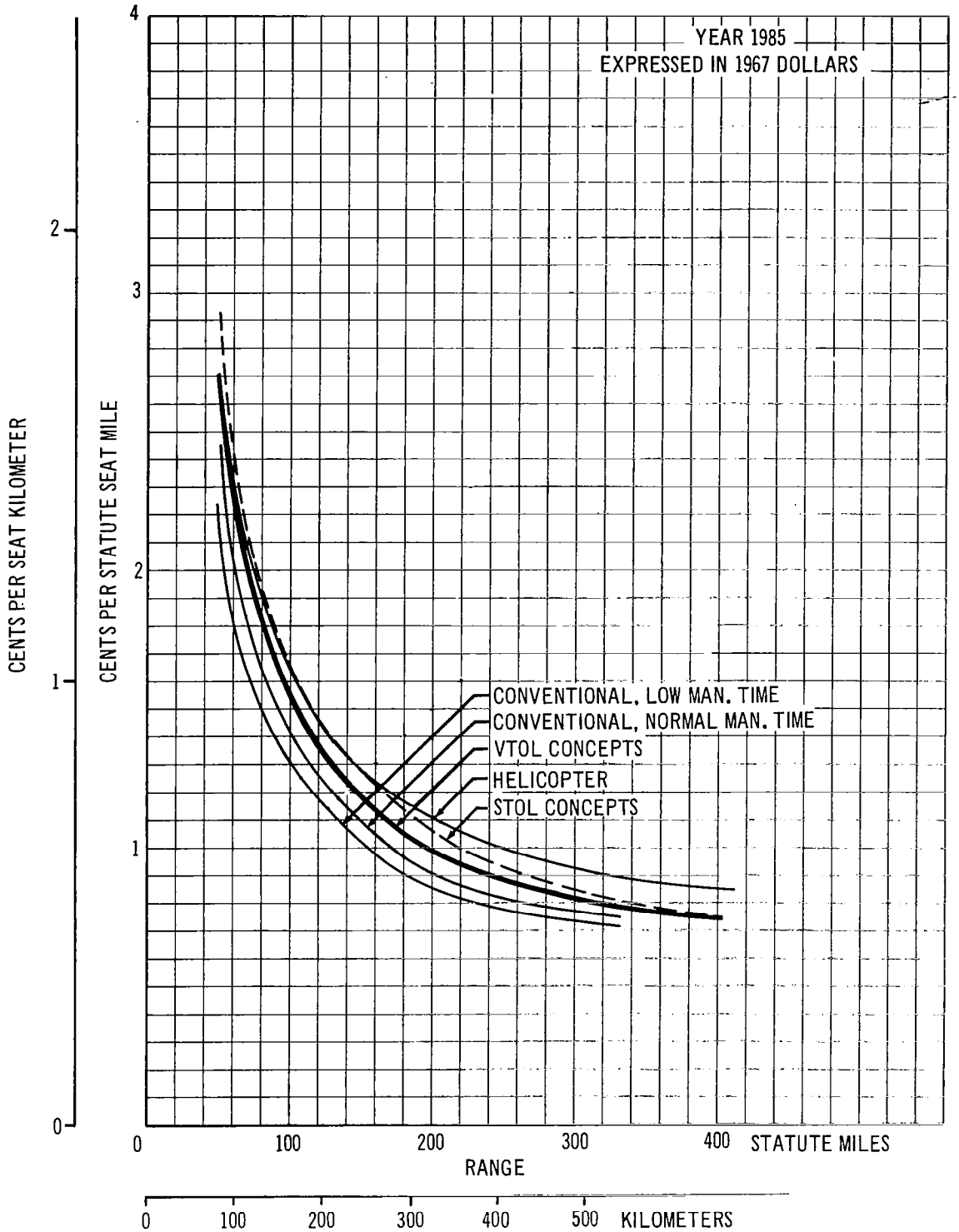

Figure 16: Indirect Operating Cost—200-Passenger Capacity

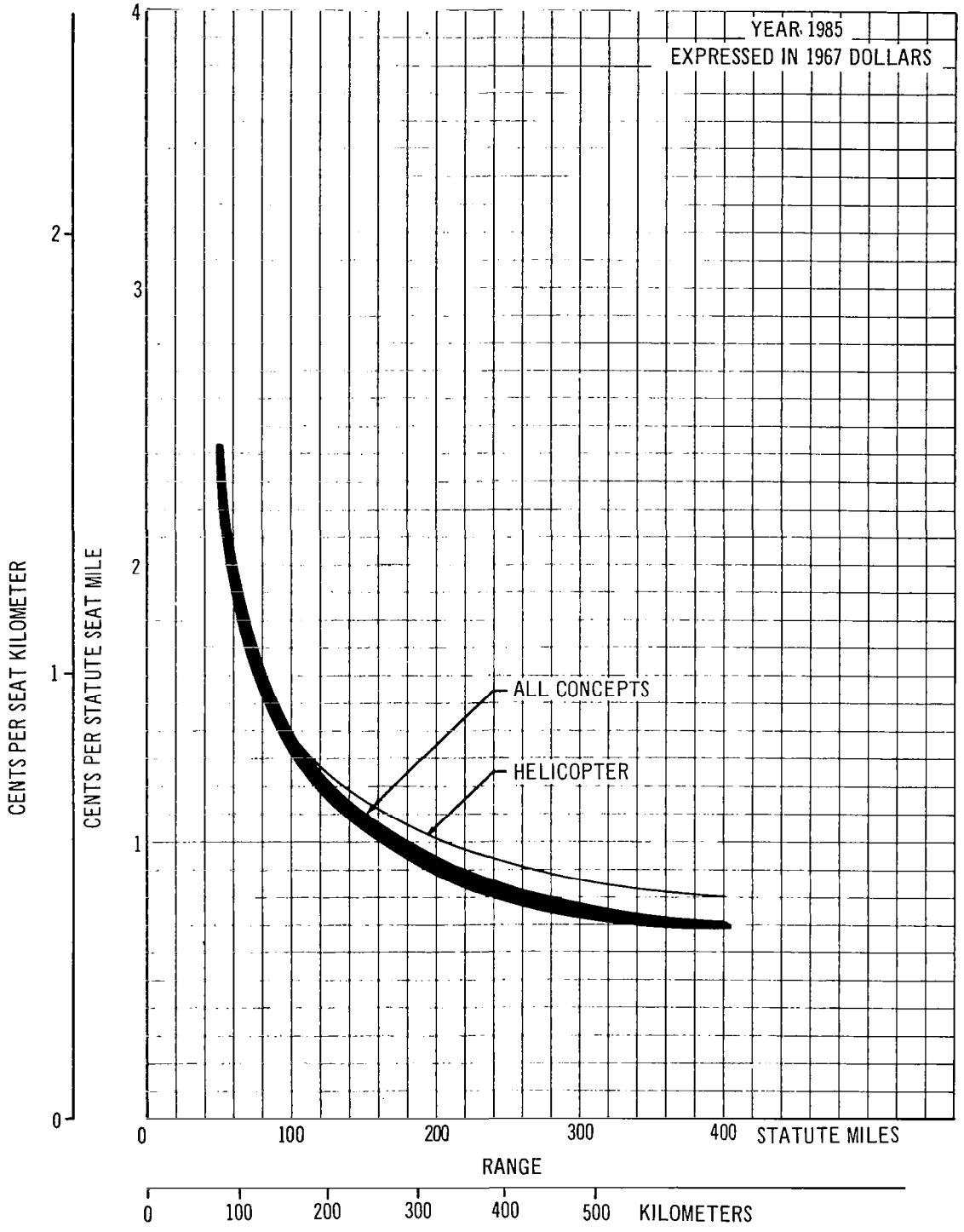

Figure 17: Indirect Operating Cost—200-Passenger Capacity, Reduced Facilities Depreciation

6.5 Vehicle Profitability

6.5.1 Fare Levels.—The combination of the revenue side of the operation with the total operating cost provides visibility to the profitability of each of the concepts at any range.

When the revenue philosophy was established, the first step was to define the fare levels of the conventional airplane system considered operating as a major competitor to the V/STOL system. It was recognized that very possibly by the 1985 time period, 200- and even 500-passenger, short-haul, high-density, conventional (CTOL) aircraft would be operating in the Northeast and the West Coast and possibly in the Gulf Coast, but in the last named case a size between 100 and 200 seats was considered more likely. Consequently, two levels of base fare, representative of CTOL operations, are postulated for 1985 and are to be considered as ranging the possibilities that could exist in these three regions (fig. 18).

The base fare used for the Northeast and West Coast regions is the average of the fares which produced a 15% return on sales after taxes at all ranges at a 60% load factor for the 200- and 500-seat low maneuver time CTOL. Due to the low-density market in the Gulf Coast region it was necessary to increase the fare to provide a profitable system operation. The base fare selected as appropriate was then a 15% return on sales for a 120-seat normal maneuver time CTOL.

In this study it is assumed that fare and yield are synonymous in that the system is defined to be self-supporting and does not offer any promotional or reduced rates. Initially, also it was recognized that the fare structure on the V/STOL systems could range from being equal to the CTOL level up to a premium level that would enable the operator to realize a maximum profit.

This premium, or increment in fare above the base, can be considered as the amount a passenger is willing to pay if he values the time that he is saving by traveling by a faster mode (potentially the V/STOL way). It can also be considered as a difference in access cost in getting to and from the respective terminals, so that total trip costs by any mode (VTOL, STOL or CTOL) are identical. It can even be considered an increment that a customer is willing to pay for the added convenience of a nearby transport system whether or not, in fact, it saves him any time.

In view of the great disparity in establishing a universally accepted value of time* and the difficulty in defining quantitatively the latter consideration, it was generally established that the V/STOL fare level would be generated from the base CTOL level by the addition of an increment that is numerically equal to the difference in total access costs, and thus establish a condition of concept comparison on the basis of customer indifference to total trip costs. (This V/STOL fare level is sometimes referred to as the indifference fare level.)

Trip cost and trip time plotted against range are shown in figs. 19 through 21.

*Value of time effects are studied in a sensitivity analysis.

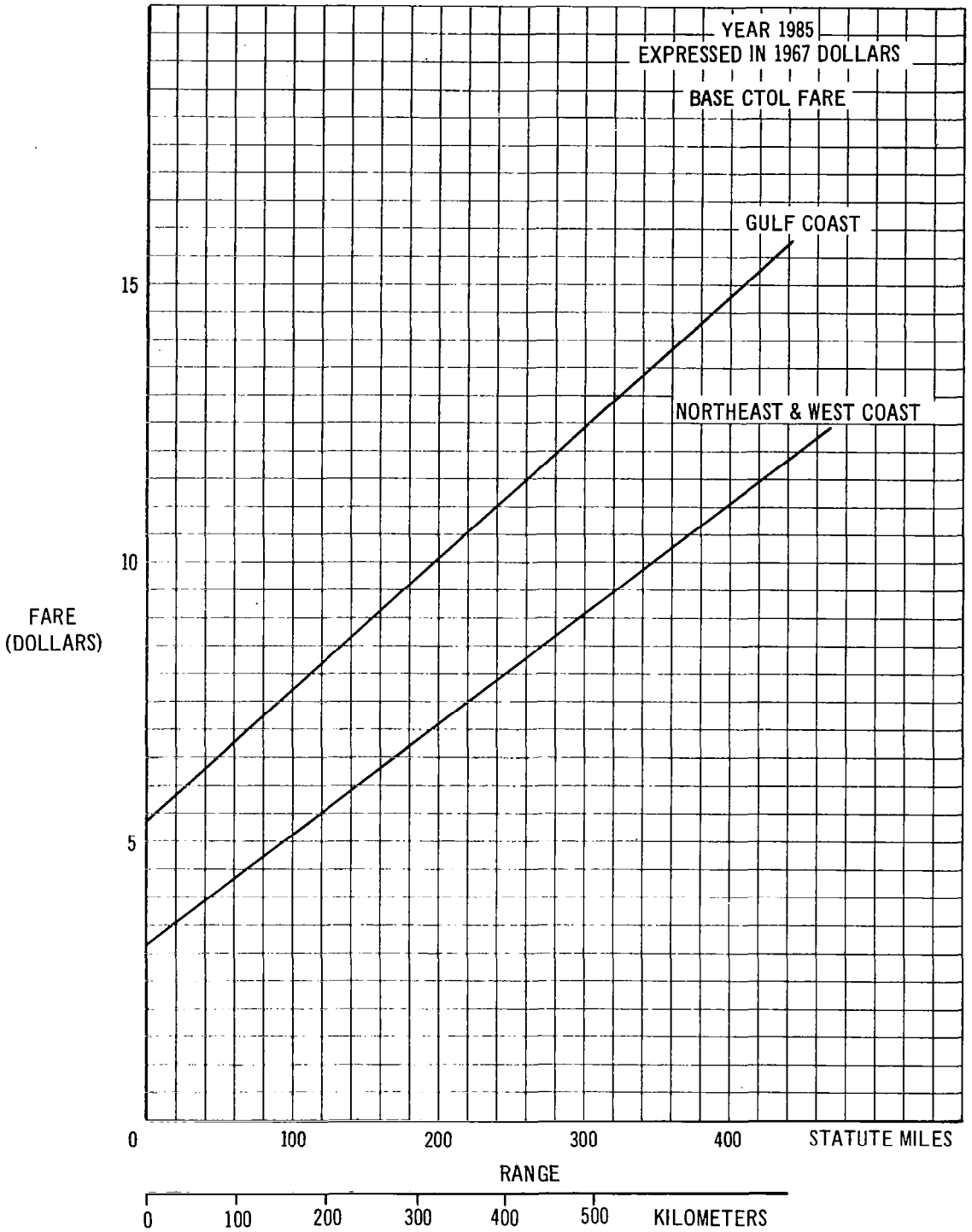

Figure 18: Conventional Airplane Base Fare—1985

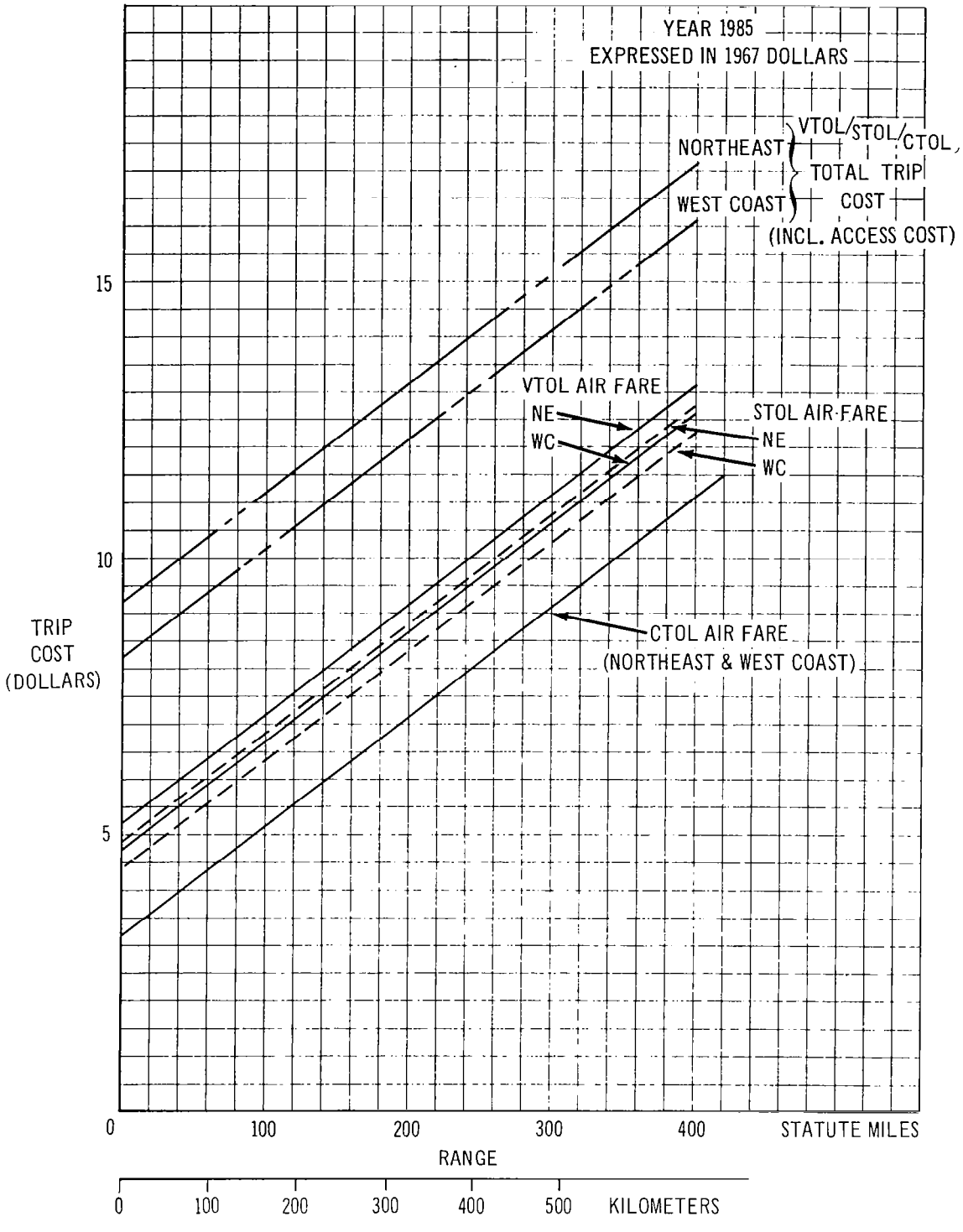

Figure 19: Trip Cost—Northeast and West Coast

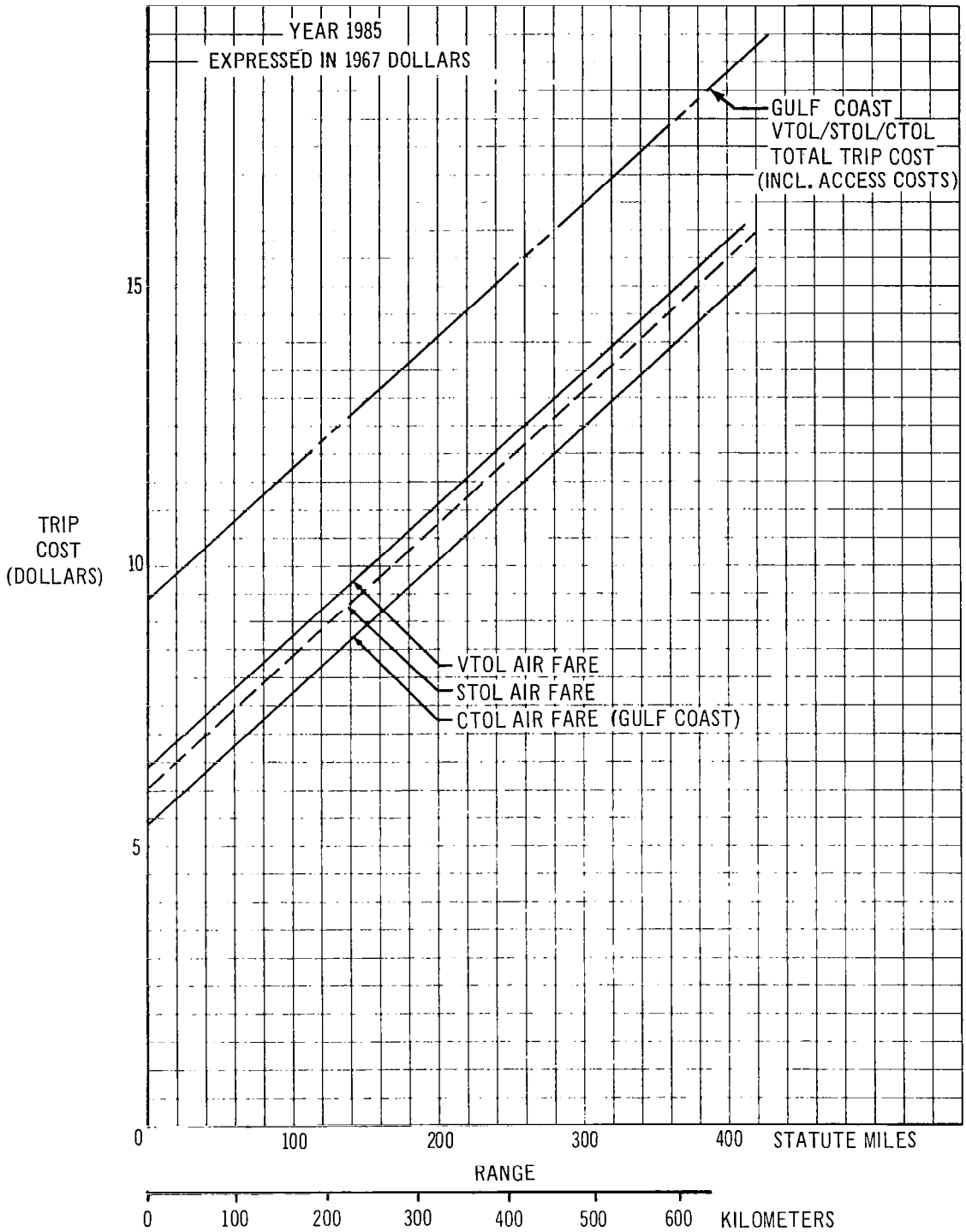

Figure 20: Trip Cost—Gulf Coast

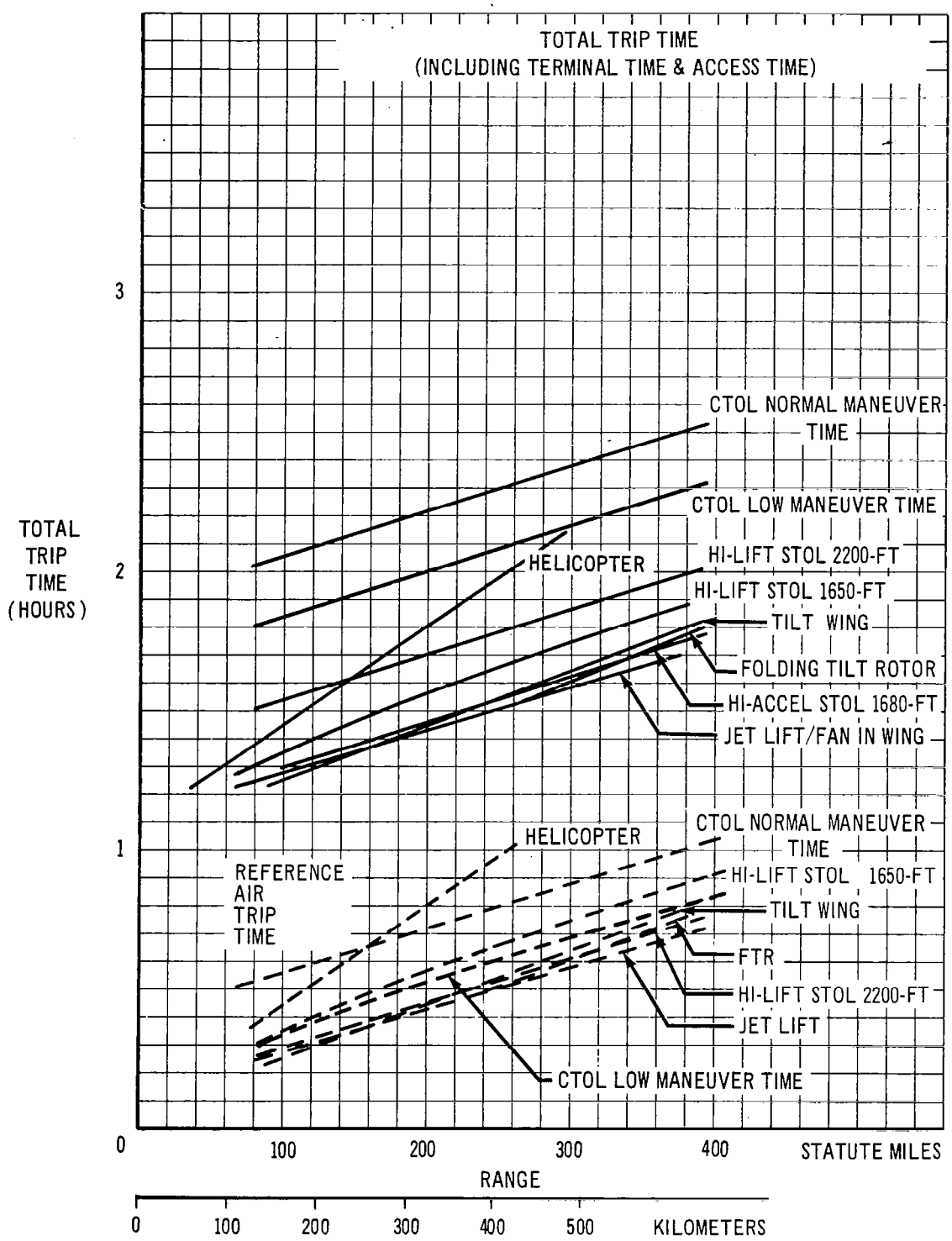

Figure 21: Total Trip Time—Northeast

6.5.2 Concept Unit Profitability. — The profitability criterion selected for the study is a return on sales measure where this is defined as the book profit per passenger divided by the yield per passenger or as the book profit as a percent of sales. It is calculated after taxes and investment credits are assessed.

For the purpose of tax calculations a 7-year shield is assumed and the return on sales is estimated as the average per year over the 7-year period.

It is calculated and plotted against range for a variety of assumptions of fare, indirect operating cost level, geographical region and airplane design capacity. (See figs. 22 through 25.) A constant load factor of 60% is used. Consideration of these plots should indicate which concepts are the most profitable and at which ranges this profit occurs. As can be seen, however, while this is generally evident with respect to groups of concepts (as in the case of DOC's), discerning between specific concepts is still subject to the doubt of its usefulness in view of the small differences between concepts.

The rotor group (excluding the helicopter) returns the highest book profit at the shorter ranges for all sizes of V/STOL aircraft studied in each geographical region at all fare levels. The 2200-foot, high-lift STOL and the nonrotor V/STOL group become most profitable at the longer ranges.

Of particular importance, however, is the relationship of the V/STOL groups with respect to the CTOL concepts with both low and normal maneuver times. These latter concepts represent the competition to the V/STOL concepts.

In fig. 22, where the V/STOL fare is generated from a CTOL base that is itself derived from a return on sales of an aircraft having a design capacity larger than 200 seats, the V/STOL groups at the 200-passenger capacity are generally more profitable than the CTOL concepts. Note that the return on sales for a 200-seat CTOL low maneuver time aircraft is approximately 12 percent.

However, in fig. 23 the V/STOL groups at the 120-passenger capacity deteriorate relative to one of the CTOL concepts except at the very short ranges. This is representative of the Northeast and West Coast regions, where the CTOL fare is based on the aircraft with a capacity greater than 200.

In the Gulf Coast region, where the CTOL fare is based on a 120-passenger airplane, the profitability shows the same reducing trend with decreasing size, but at the smallest size (90 passengers) it does not become marginally positive.

These trends emphasize the point that each geographical region justifies its own base CTOL fare level so that when the premium charge is added to obtain the V/STOL fare (this incremental charge being smallest in the Gulf Coast and largest in the Northeast), the V/STOL concepts can still obtain a favorable profit position relative to the CTOL concepts. Later it is shown that this requirement of individual fare levels for each region is strengthened by the fact that the relatively lower total traffic demand of the West Coast and Gulf Coast may not generate a practical level of profit after taxes unless a sufficiently high fare level is proposed.

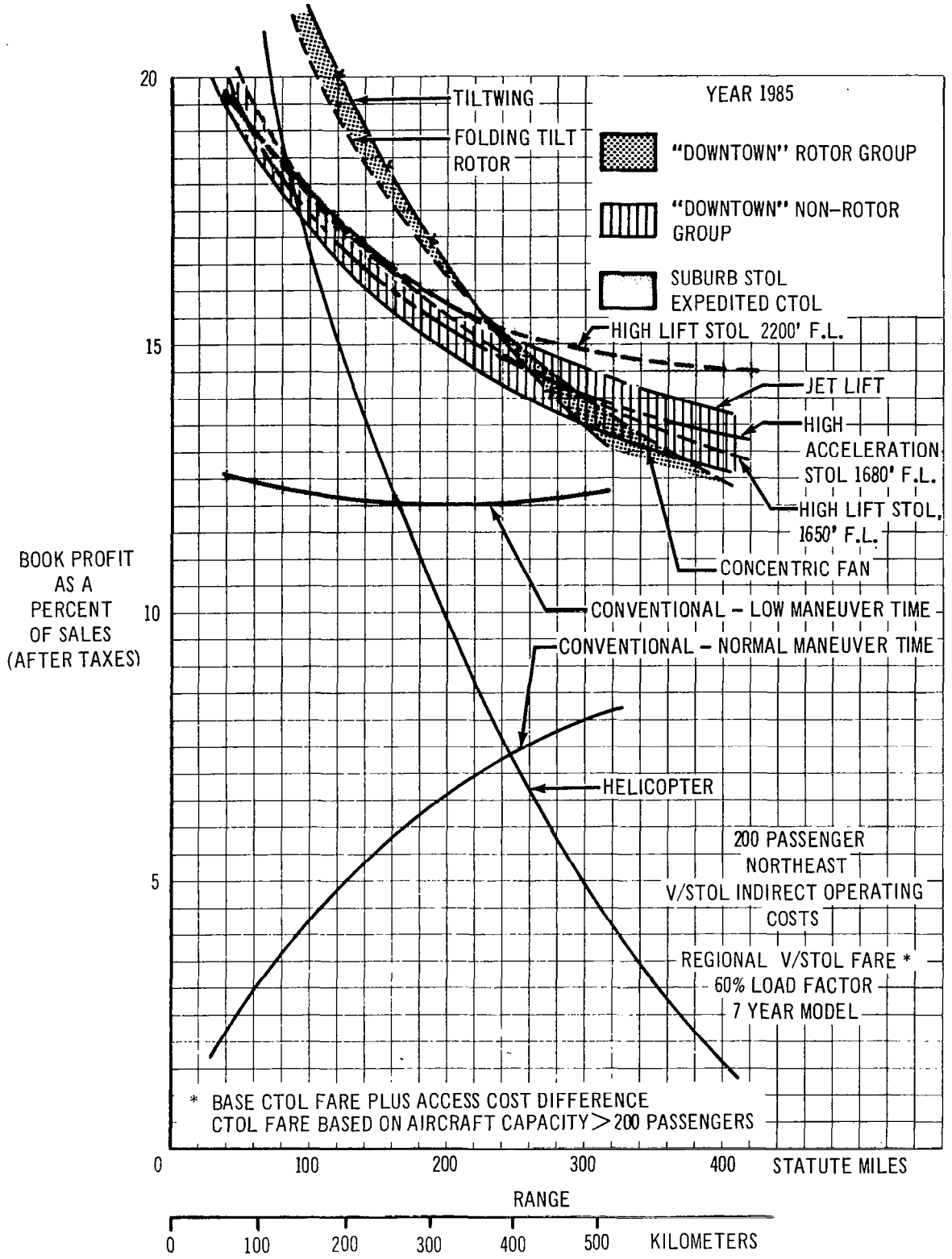

Figure 22: Return on Sales—Northeast, 200-Passenger Capacity V/STOL Fare at Indifference Level

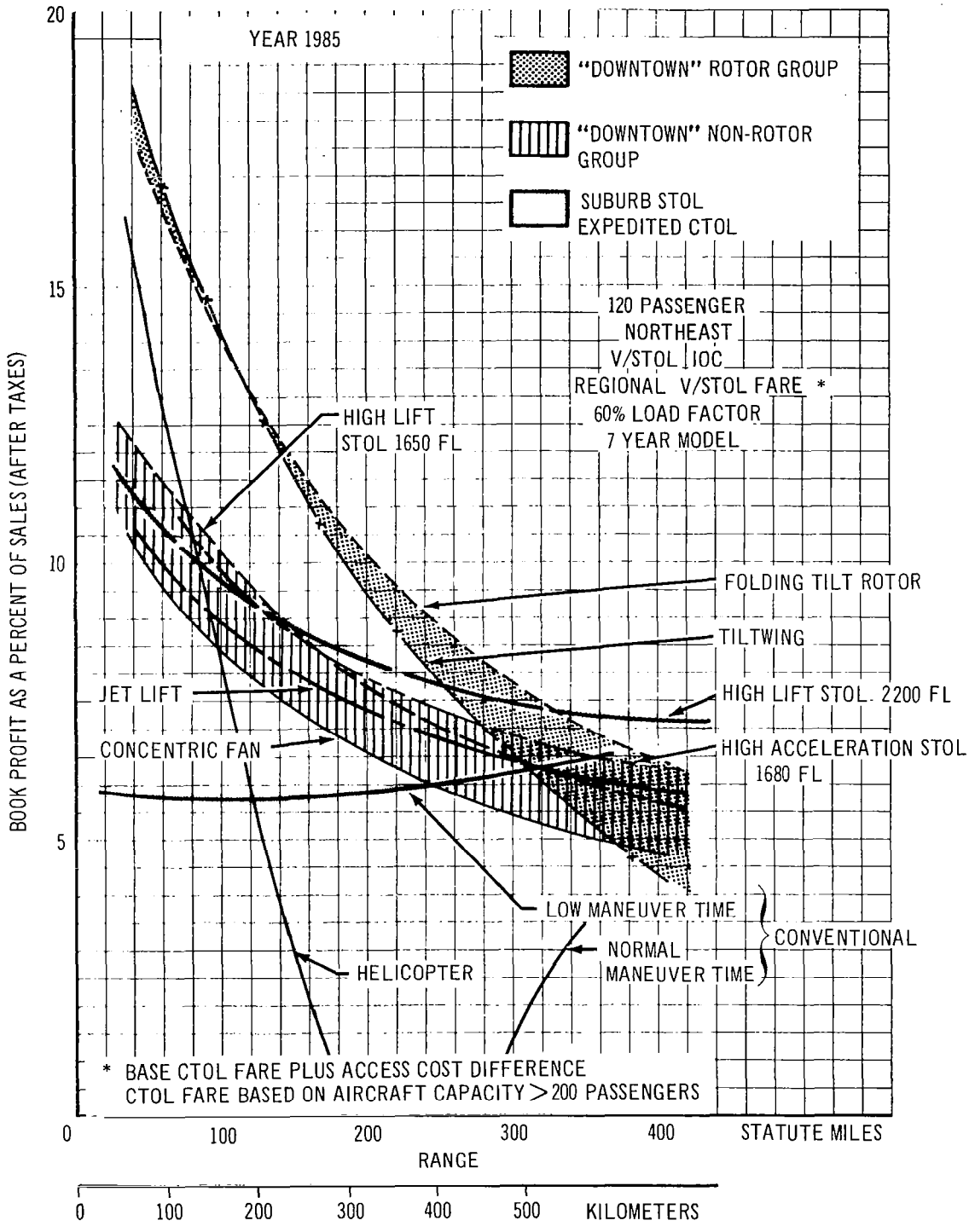

Figure 23: Return on Sales—Northeast, 120-Passenger Capacity V/STOL Fare at Indifference Level

When the operator of the V/STOL system offers the same fare structure as the CTOL operator, the deterioration in the V/STOL vehicle profitability relative to the CTOL concepts is as shown in figs. 24 and 25.

At the shorter ranges the rotor concepts, including the helicopter, can be the most profitable if the only competition is a normal-maneuver-time CTOL concept, but if the low-maneuver-time CTOL concept is available, then the V/STOL operator must recognize that he is using a vehicle that is not the most profitable. This does not imply, however, that he cannot make a profit, because his system can offer additional convenience and faster trips at a lower total cost, and hence can potentially attract a large market.

In the assessment of vehicle indirect operating costs (IOC), one of the factors to be considered is the depreciation cost of the ground facilities. In this study two assumptions are made concerning this cost: First is the basic assumption of private ownership of facilities and depreciation of full facilities cost (no subsidization). Second is the assumption that the facilities cost depreciation may be handled the same as current conventional airplane facilities, thereby reducing IOC levels. An increase in profitability of all V/STOL concepts is evident in the latter case, with the STOL concepts benefiting the most from the reduction in IOC.

6.6 Systems Analysis and Concept Suitability

6.6.1 Economic Suitability. — The combination of the unit profitability of the vehicle versus range with the passenger level and frequency demand of a specified airline system, finally provides visibility in an economic sense to the suitability of any particular concept on a system-wide basis.

Summaries of system operator profit show the relative economic suitability of each concept in each geographical region for various fares and operating cost assumptions. In addition, the total number and size of the aircraft making up the optimum mix are shown.

In presenting the system profit results, it is assumed that two separate airline organizations are operating in each geographical region, that their routes are identical, and that the total traffic flow is divided equally between them.

In general, a review of these summaries shows that, except for a few concepts, the economic suitability of any concept relative to the others, if measured as the total profit to the operator, is difficult to establish with any degree of credibility in the meaning of the resulting order of preference (figs. 26 through 28). The numbers below the graphs indicate quantities of aircraft and passenger capacities; thus 26-90 means 26 aircraft, each with a 90-passenger capacity.

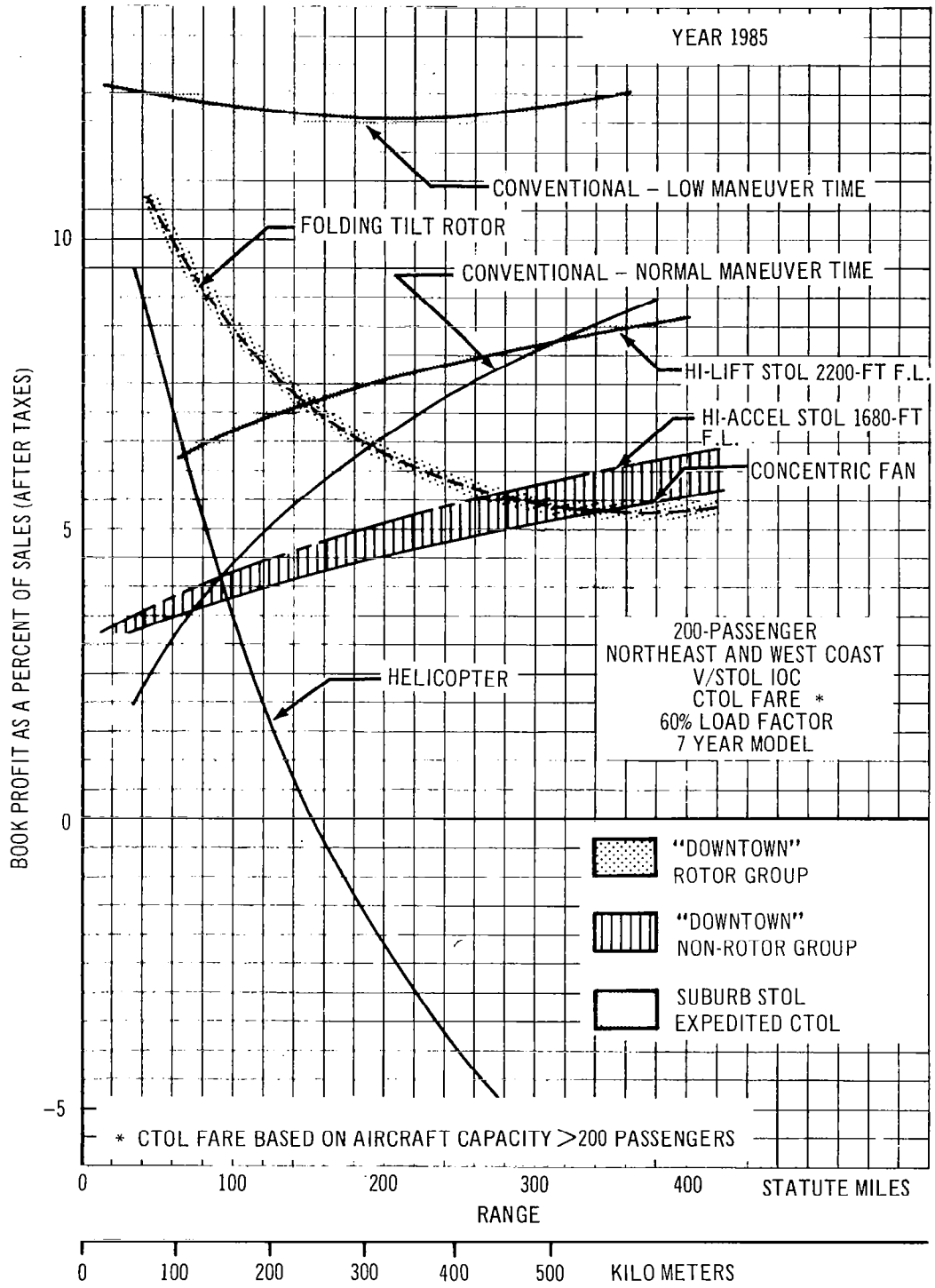

Figure 24: Return on Sales—Northeast and West Coast, 200-Passenger Capacity V/STOL Fare Reduced to CTOL Level

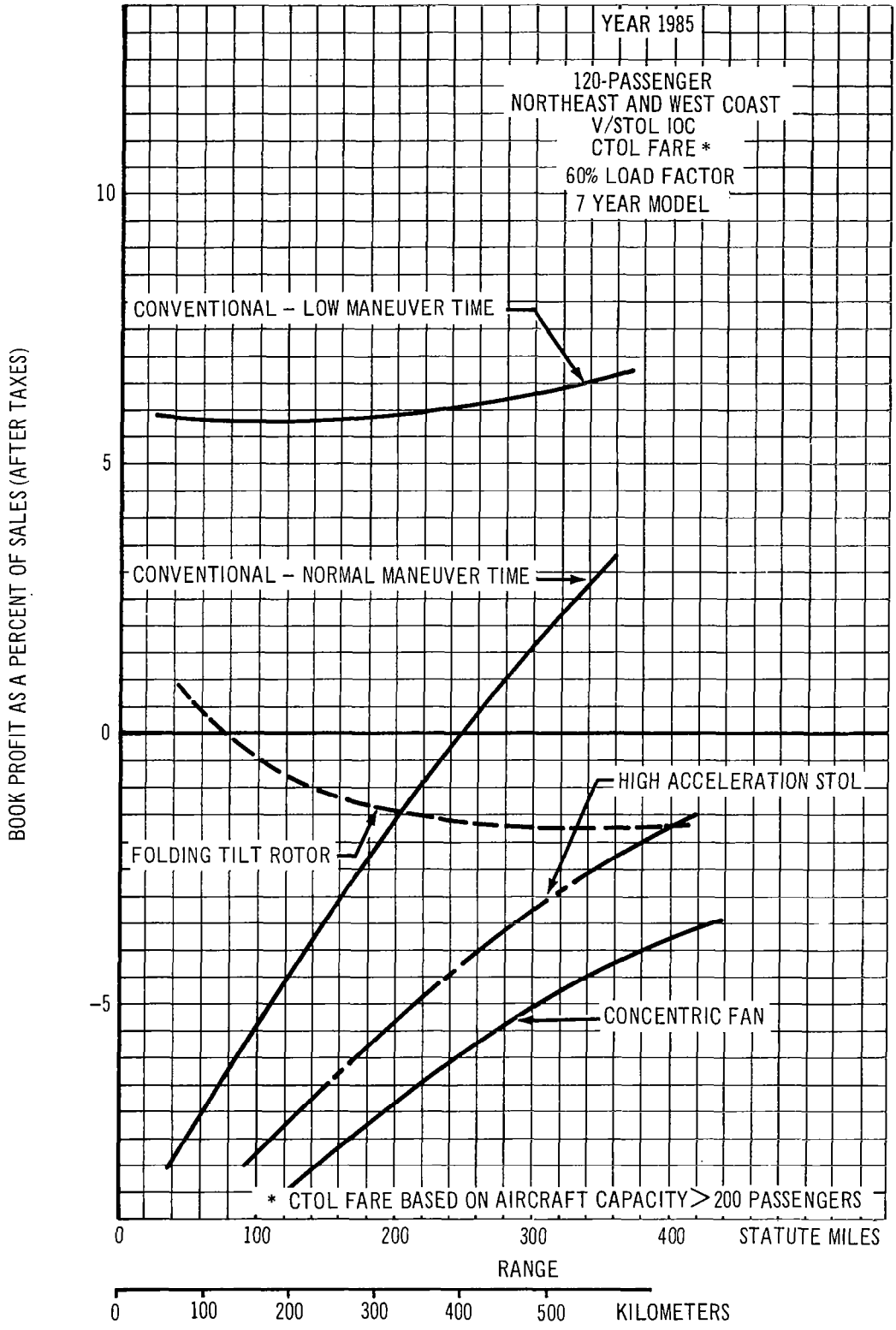

Figure 25: Return on Sales—Northeast and West Coast, 120-Passenger Capacity V/STOL Fare Reduced to CTOL Level

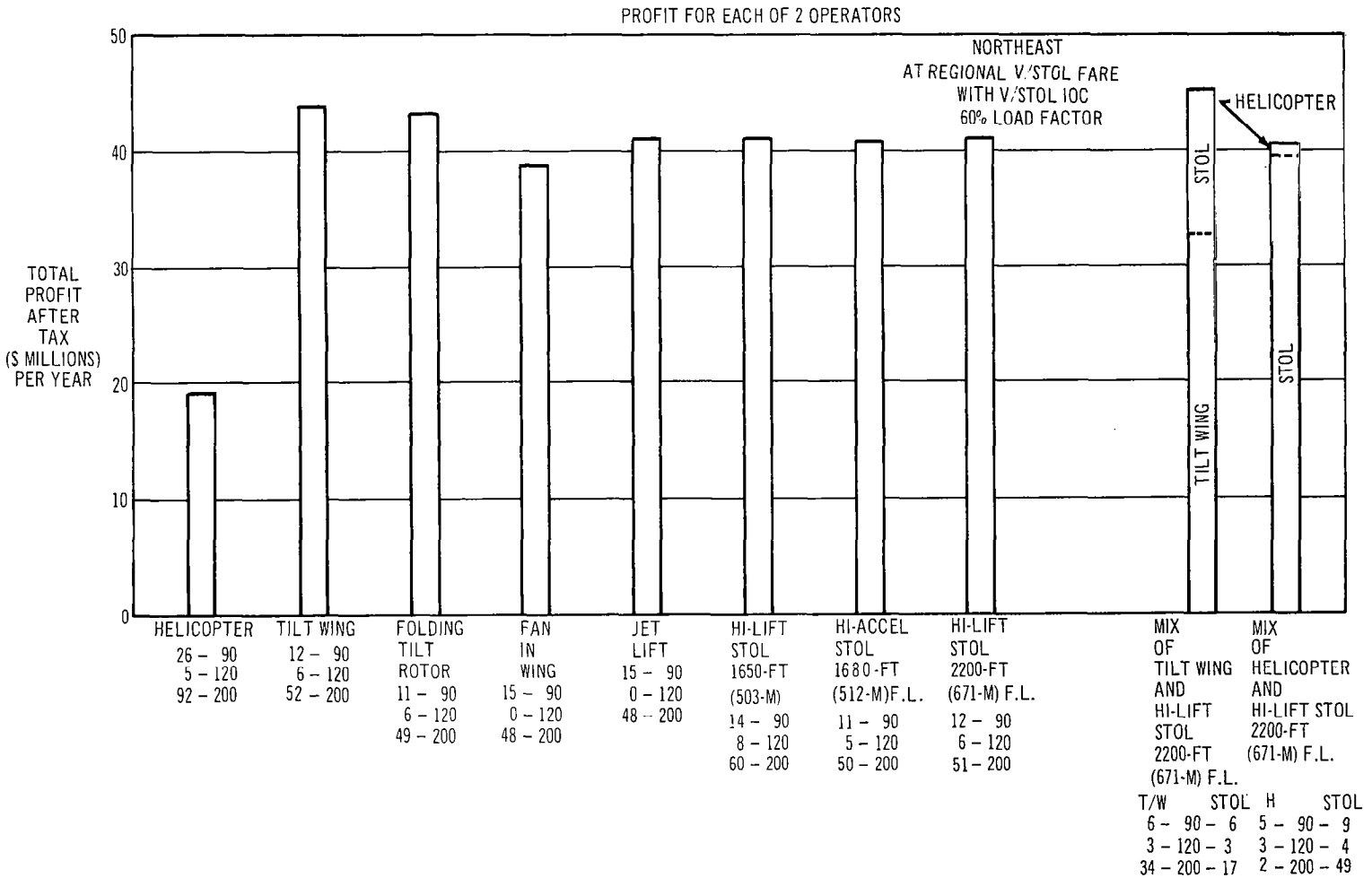

Figure 26: System Profit Concept Comparison—Northeast

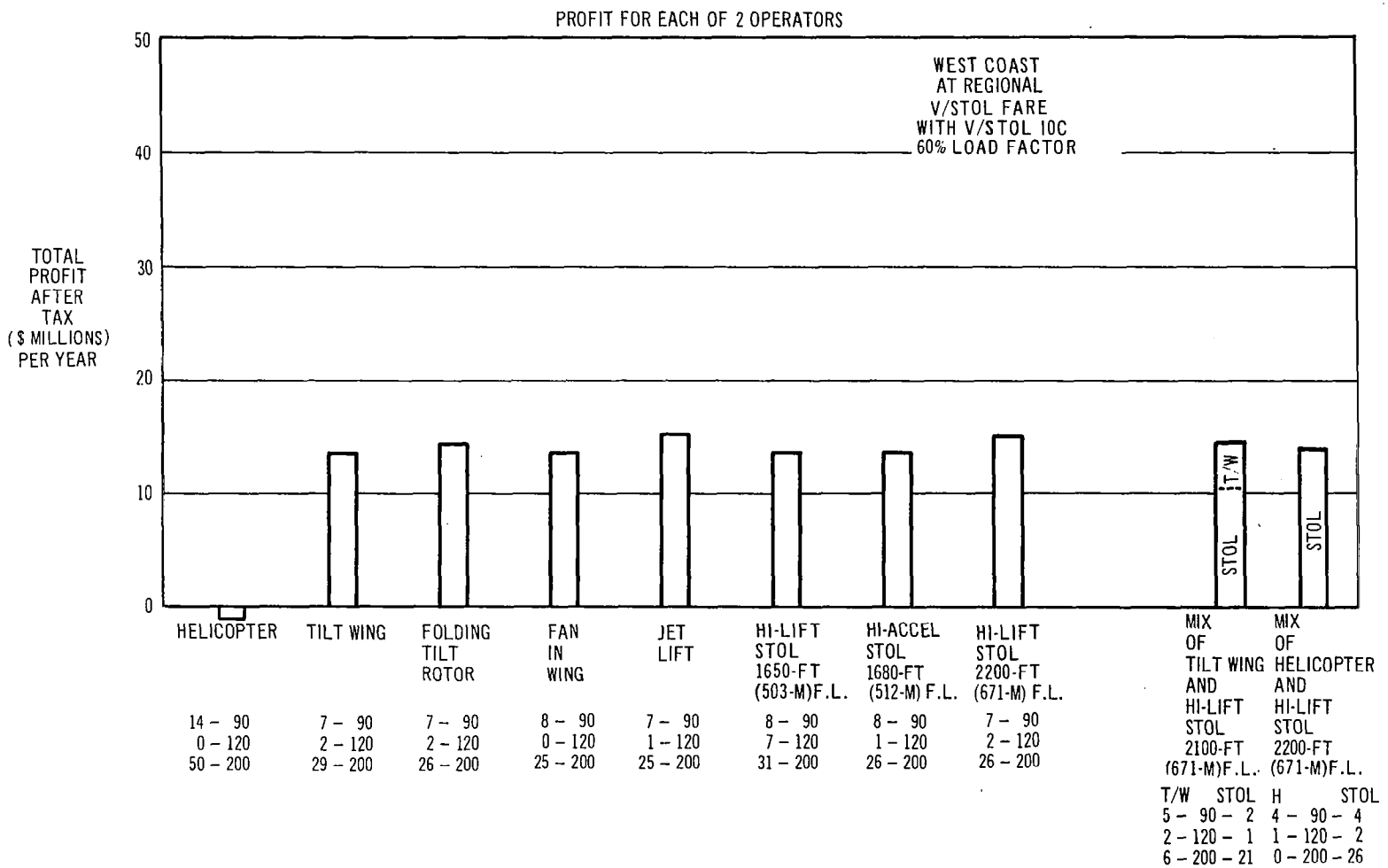

Figure 27: System Profit Concept Comparison—West Coast

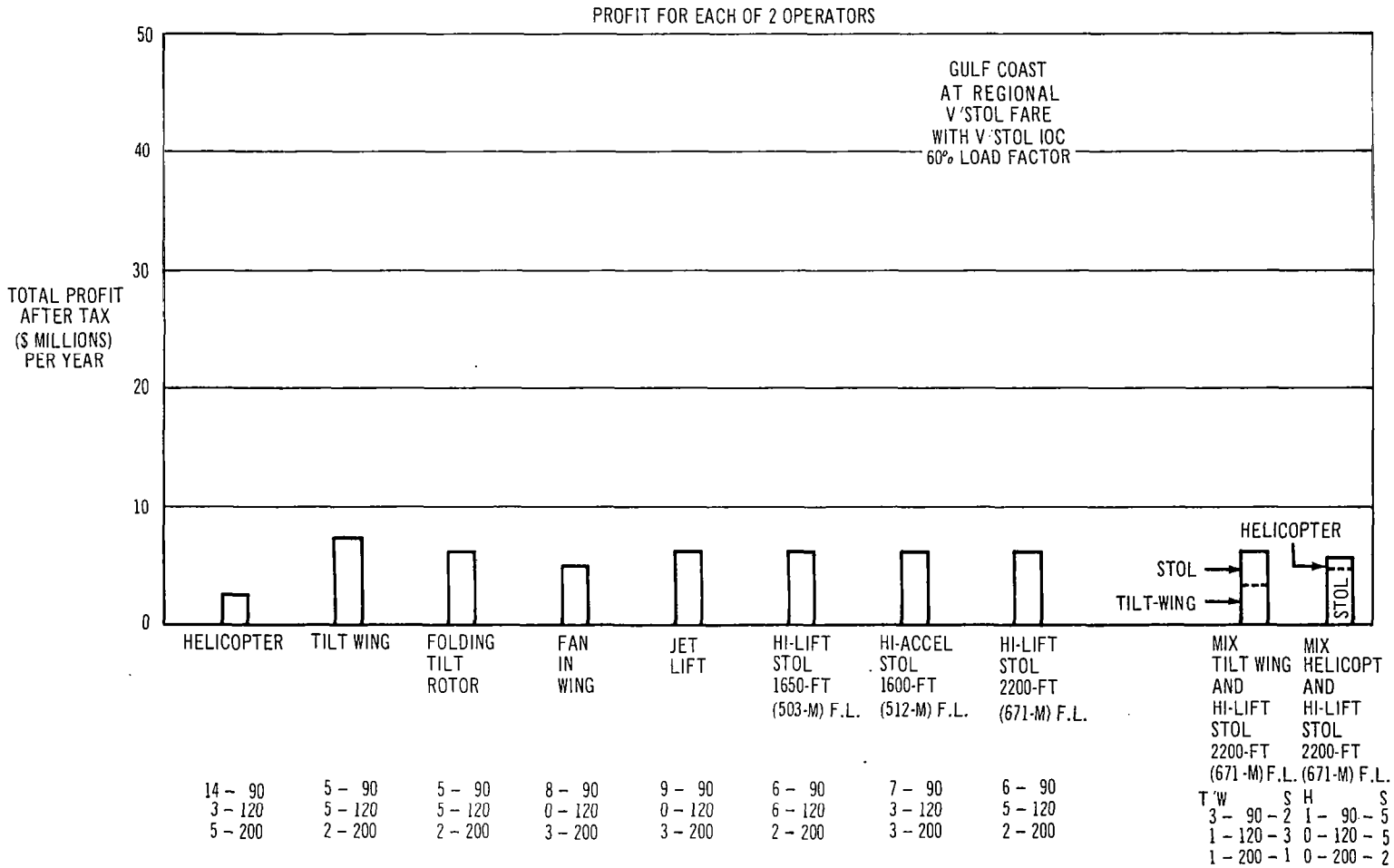

Figure 28: System Profit Concept Comparison—Gulf Coast

Specifically, in each region, by reason of the different distribution of traffic demand versus city-pair distance, trends are evident that suggest the possible desirability, from an economic aspect, of certain concepts. For example, in the Northeast, the rotor concepts (excluding the helicopter) appear most attractive, the density of demand being heaviest in the 200-mile ranges; whereas in the West Coast, where the heaviest density is at approximately 350 miles, the jet-lift and high-lift STOL designs appear to have a slight edge by the virtue of their marginally better profitability at the longer ranges.

Below each concept heading is shown the numbers of each size aircraft required in the fleet mix that optimizes the profit to the operator.

In the case of the optimum fleet mix of concepts as well as aircraft sizes, figs. 29 through 31 show in each region what theoretically is the best mix to achieve the maximum profit. From fig. 32 it can be seen that in general the total profit returned by this optimum fleet mix of concepts can be very closely matched by either a single fleet of all tilt wing concepts or all folding tilt rotors. Also in this figure can be seen the profitability of two postulated fleet mixes that could represent a developed first-generation V/STOL airline system. Specifically, one mix involves the use of only tilt wing aircraft at ranges below 230 miles with only the high-lift STOL 2200-foot concept used at all ranges above. The second mix involves only helicopters below 150 miles with only the same STOL concept above 150 miles.

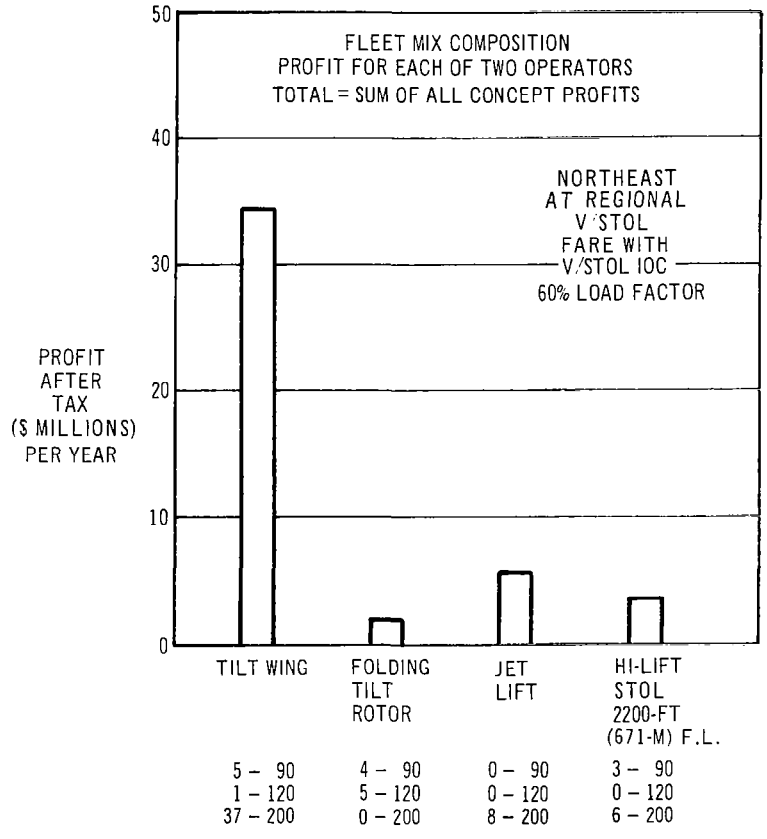

Figure 29: System Profit Optimum Fleet Mix—Northeast

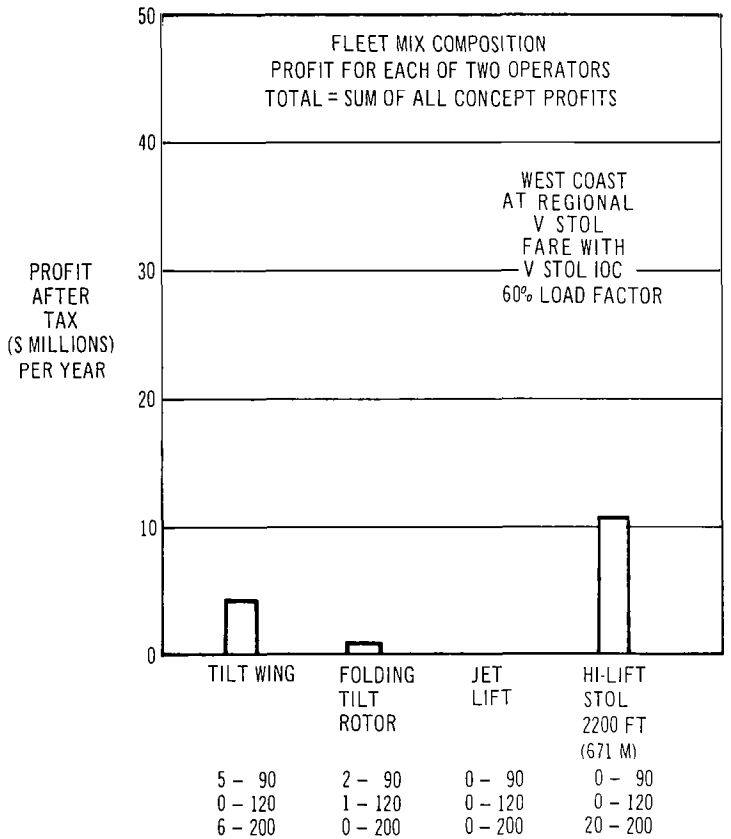

Figure 30: System Profit Optimum Fleet Mix—West Coast

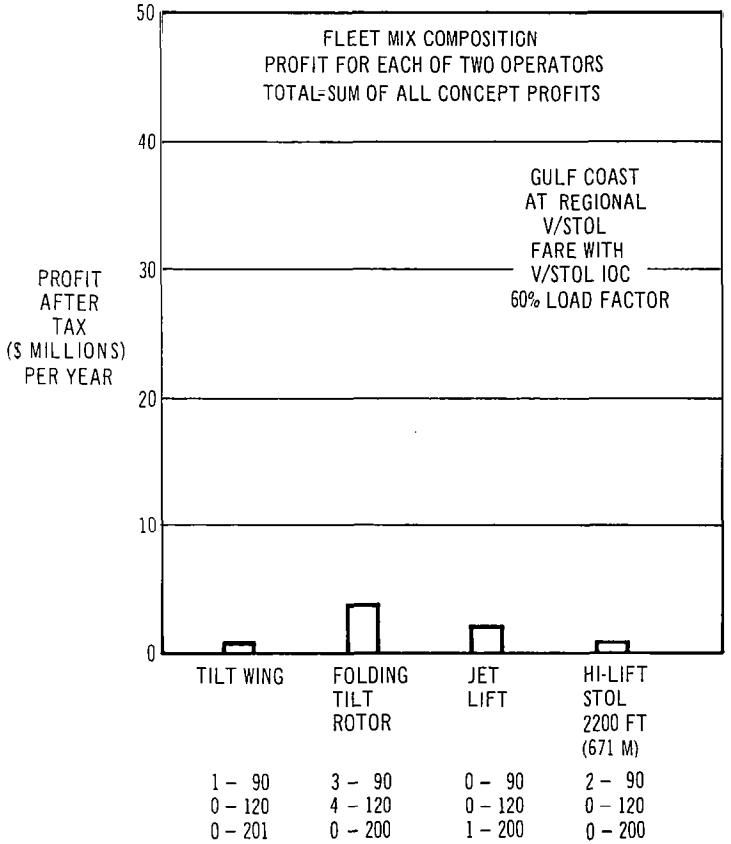

Figure 31: System Optimum Fleet Mix—Gulf Coast

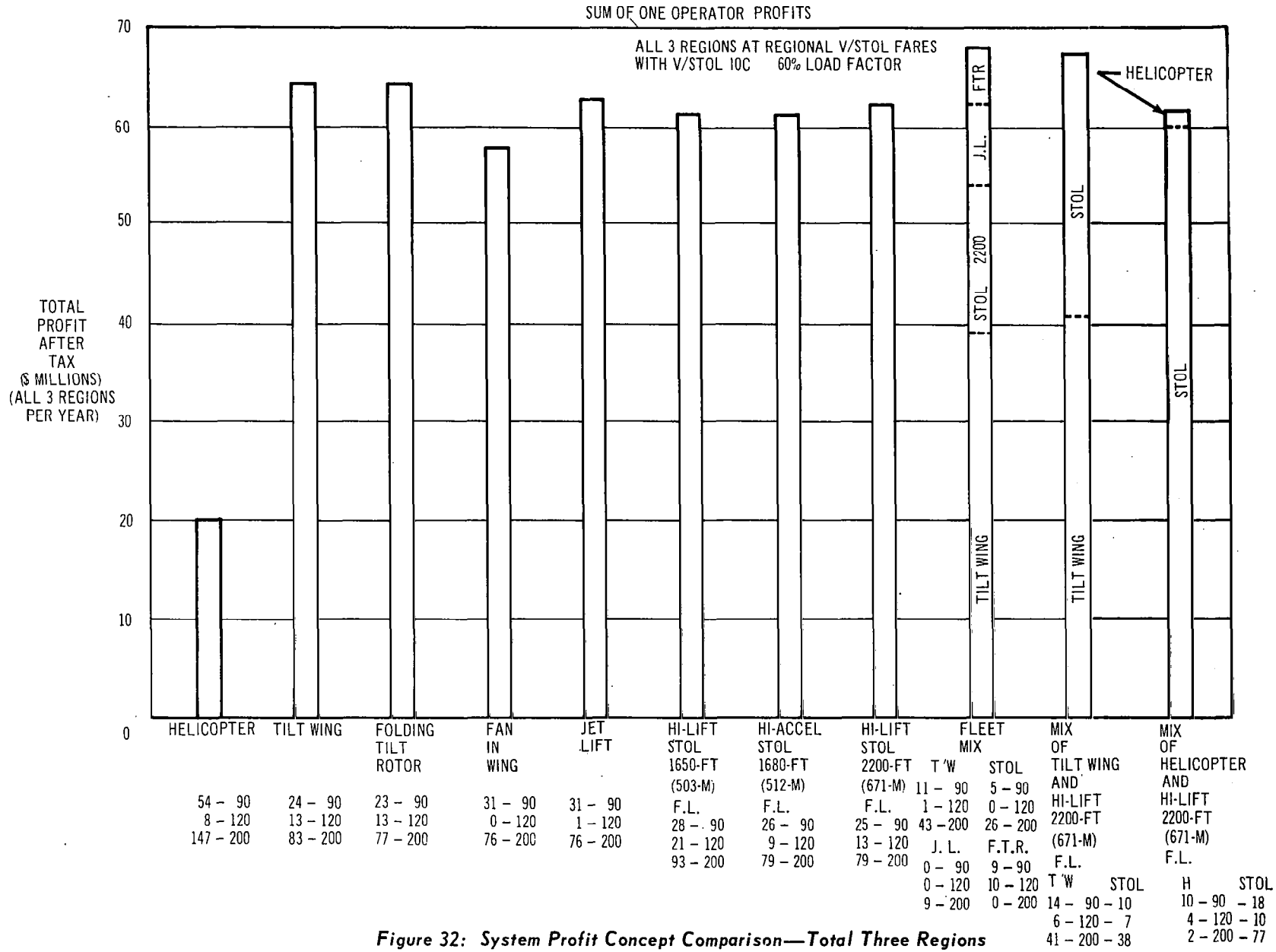

Figure 32: System Profit Concept Comparison—Total Three Regions

Especially significant is the effect on system profit, and hence the possible economic viability of a V/STOL system, of reducing the fare to the CTOL level, i.e., eliminating any premium in the fare of the V/STOL system relative to the CTOL system. This causes a severe reduction in the potential profit of most concepts (see fig. 33). Only the largest design capacities are profitable. The helicopter is unprofitable at this fare level. Again, this effect does not provide any better segregation means for arranging the relative economic suitability, with the exception of the helicopter.

Alternatively, if it is assumed that a further premium above the CTOL fare might be possible if the traveler values the time he saves, then the operator can increase the fare above the indifference value to that level which will optimize the profit in each category. It can be shown that the segregation of concepts is improved, but even then it is only a separation of the STOL concepts from the VTOL. Further, the return on sales generated by this optimal fare level is considerably higher than 15% and may not be allowed by CAB.

Next is presented a series of summary charts showing the effect that some of the design and operational sensitivity factors have on system profit. Figure 34 shows how more critical hover time is to the nonrotor concepts, and how little hover time can be allowed on a continuous yearly basis before the profit capability of the VTOL concepts suffers relative to the STOL concepts. A review of hover time as it may be affected by the assumption of weather conditions and electronic landing aid capability generally concluded that 1% to 2% of yearly operations may be subject to a hover time penalty of possible 30 seconds. On the other hand, fig. 35 shows that all concepts suffer similarly due to additional air maneuver times. A low profit producer such as the helicopter can be severely affected by this operational penalty.

Similarly, the effect of additional ground maneuver time was studied and shows that the effect is not as severe as air maneuver time. In fact 1 minute of air maneuver time is approximately twice as costly as 1 minute of ground maneuver time for most concepts. Both figures relating to hover and maneuver times are prepared on the basis that <u>every</u> trip made during the year suffers these penalties.

To provide some measure of the contribution of the various technology advances, the profit comparison of fig. 36 is presented. It shows the profit levels that each concept can attain operating in a 1985 environment with a 1985 size market and traffic demand but with all the concepts first designed with the current technology in all disciplines. Next is shown, incrementally, how much more profit would be attained if the 1985 level of technology is used again in each discipline separately. Finally, the basic 1985 profit level is shown, in which all technology advances are used together. (In this case the weight increment is composed of the fixed equipment and the advanced filament composites, the advanced titanium material not being considered in the total plot.) It must be emphasized that the profit level using a 1966 technology must not be considered as a possible 1966 profit level, because the market size used is that for 1985, some ten times that of 1966. Further, 1966 technology should not indicate that any concept could be built tomorrow, for there are concept and power plant developments involved that are not currently available.

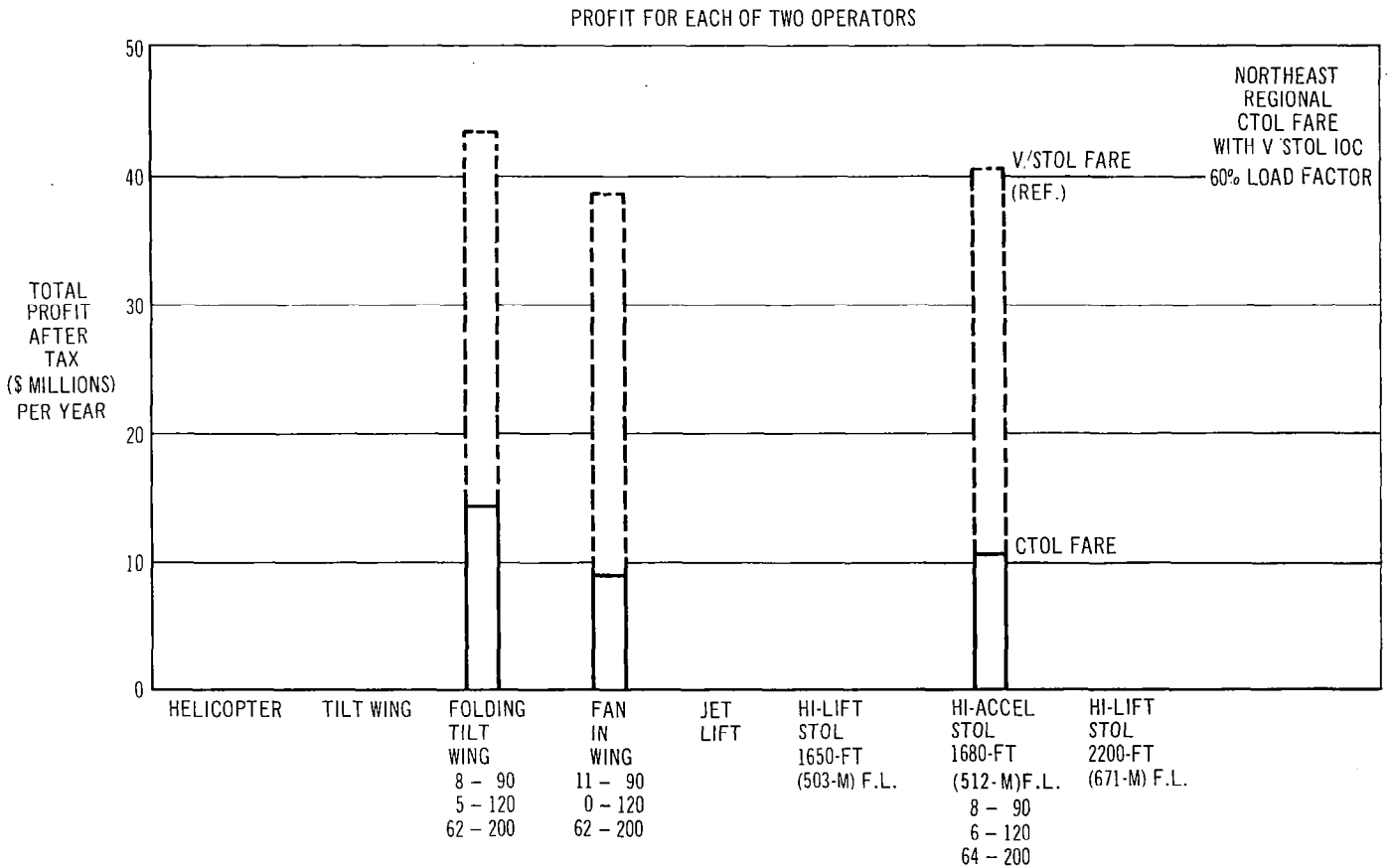

Figure 33: System Profit Effect of Reduced Fare Level—Northeast

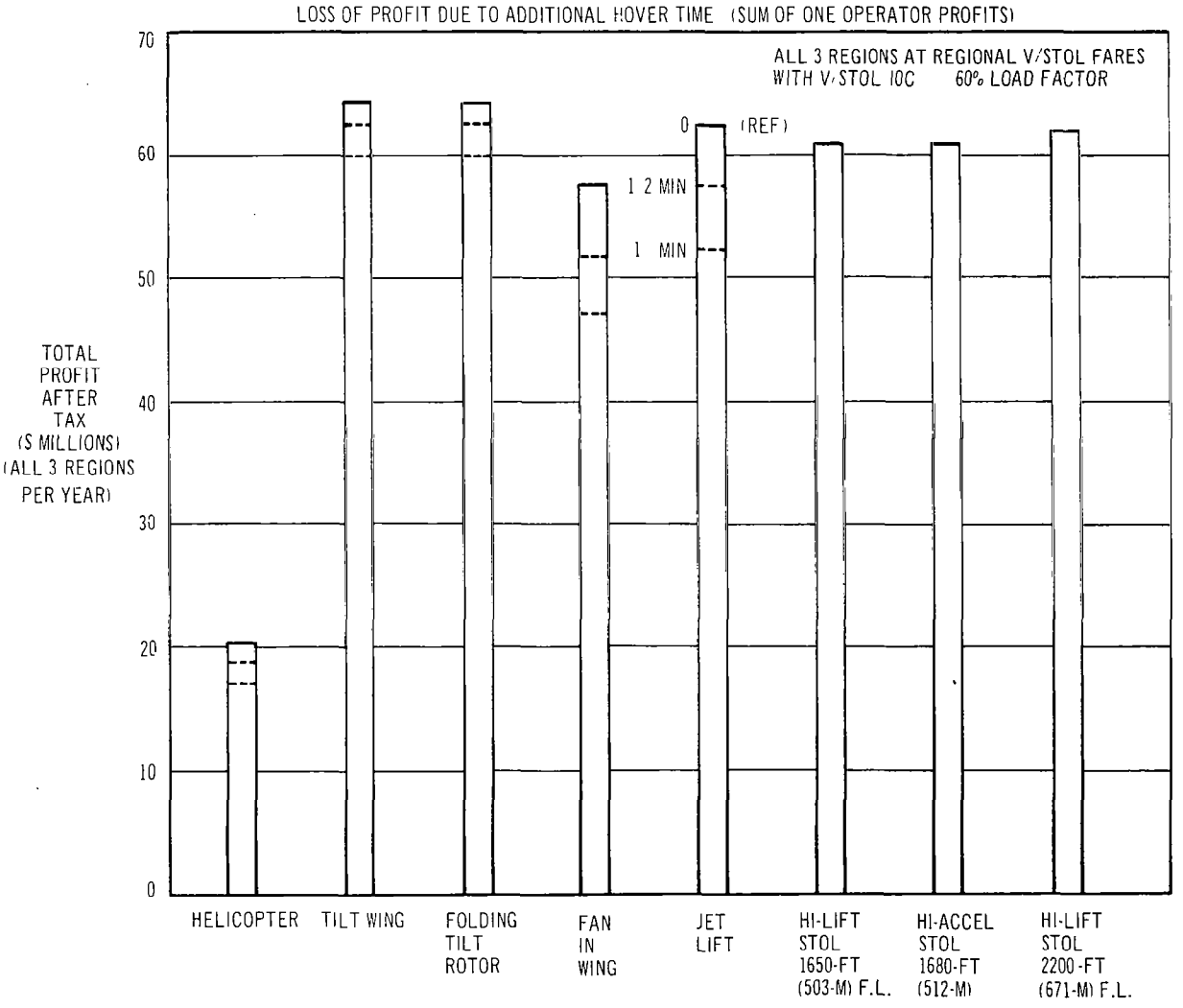

Figure 34: System Profit Effect of Hover Time—Total Three Regions

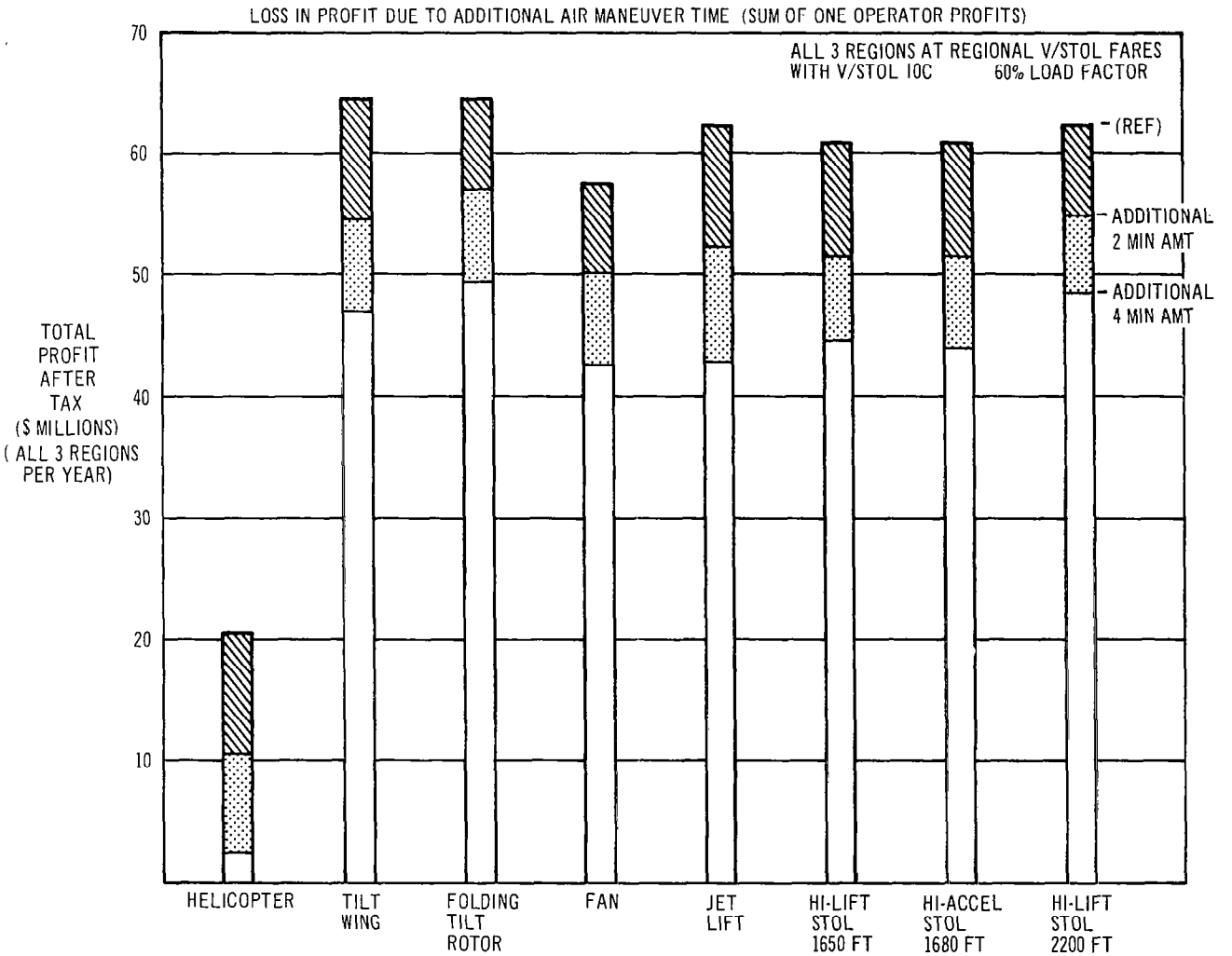

Figure 35: System Profit Effect of Additional Air Maneuver Time—Total Three Regions

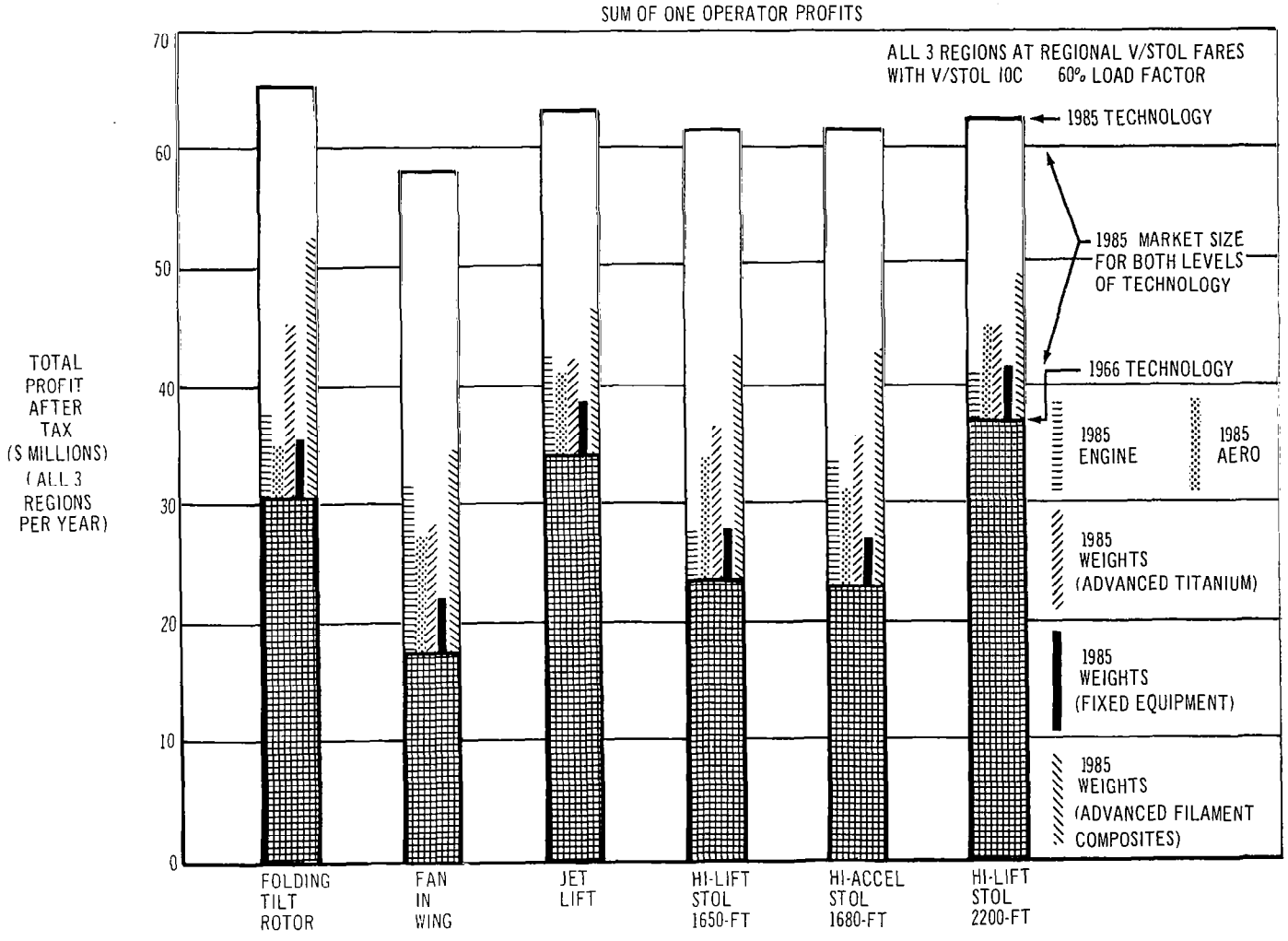

Figure 36: System Profit Effect of Technology Contributions—Total Three Systems

Essentially this chart presents the conclusion that technology advances in weight reduction are by far one of the most powerful in improving the economic possibilities of all concepts, but it should be recognized that this chart does not indicate the amount of development time and money involved in these advancements. Hence, it is possible that the advances in aero and engine technology may be easier to attain than some of these in the advanced structural materials area. Included in each of these concept presentations are the advances assumed for the various lift and augmented power systems in three areas: (1) increased usable life, (2) increased reliability, and (3) increased times between overhaul, all of which also appreciably enhance the economic possibility of some of the concepts.

Figure 37 presents the concept of an optimal fare possibility in each category for each system. The fare can be increased beyond the base CTOL level and the indifference level wherein the market will decrease but the profit will continue to increase. If the customer values the time he saves by traveling by a faster mode, he may be willing to pay a further premium above the CTOL fare. Assuming that he values his time as equal to his salary, it is possible to show that, as fare is increased, fewer and fewer people will value their time at this level, and the revenue and hence system profit will reach a maximum and then decline. The fare at which this optimum profit is attained is referred to as the "optimal fare." It is used in this study only as a sensitivity investigation of possible fare levels. The return on sales of greater than 30% in some cases could be unacceptable; hence these fare levels are considered of academic interest only.

Finally, charts are presented for three concepts that are typical of the summary charts produced for <u>each</u> concept. The chart summarizes most of the design and operational sensitivities that are analyzed as they affect system profit (see figs. 38 through 40).

A further figure of merit of economic suitability is presented (fig. 41) that is recognized as being a very much simplified "investment" measure, but it indicates again that concept segregation, while slightly more apparent, is still not made any surer.

6.6.2 <u>Community Suitability</u>. — There are many criteria that could be considered, by a community, as measures of acceptability of a new transportation system. Examples are convenience to the customer, the interface with other transportation modes, and the possibility of creating new surface traffic congestion.

However, in the case of the particular transportation system analyzed in this study, probably the most critical criterion is noise. In this section a series of the perceived noise level contours are presented that would be experienced by one of the cities included in the system. The locations of the terminals postulated in this study are generally compromises involving several conditions: a convenient location for the traffic generating area, the least aggravation due to the additional noise generation, a possible junction of other transport modes, the existing and possible future land uses, and the avoidance of surrounding airport air corridors.

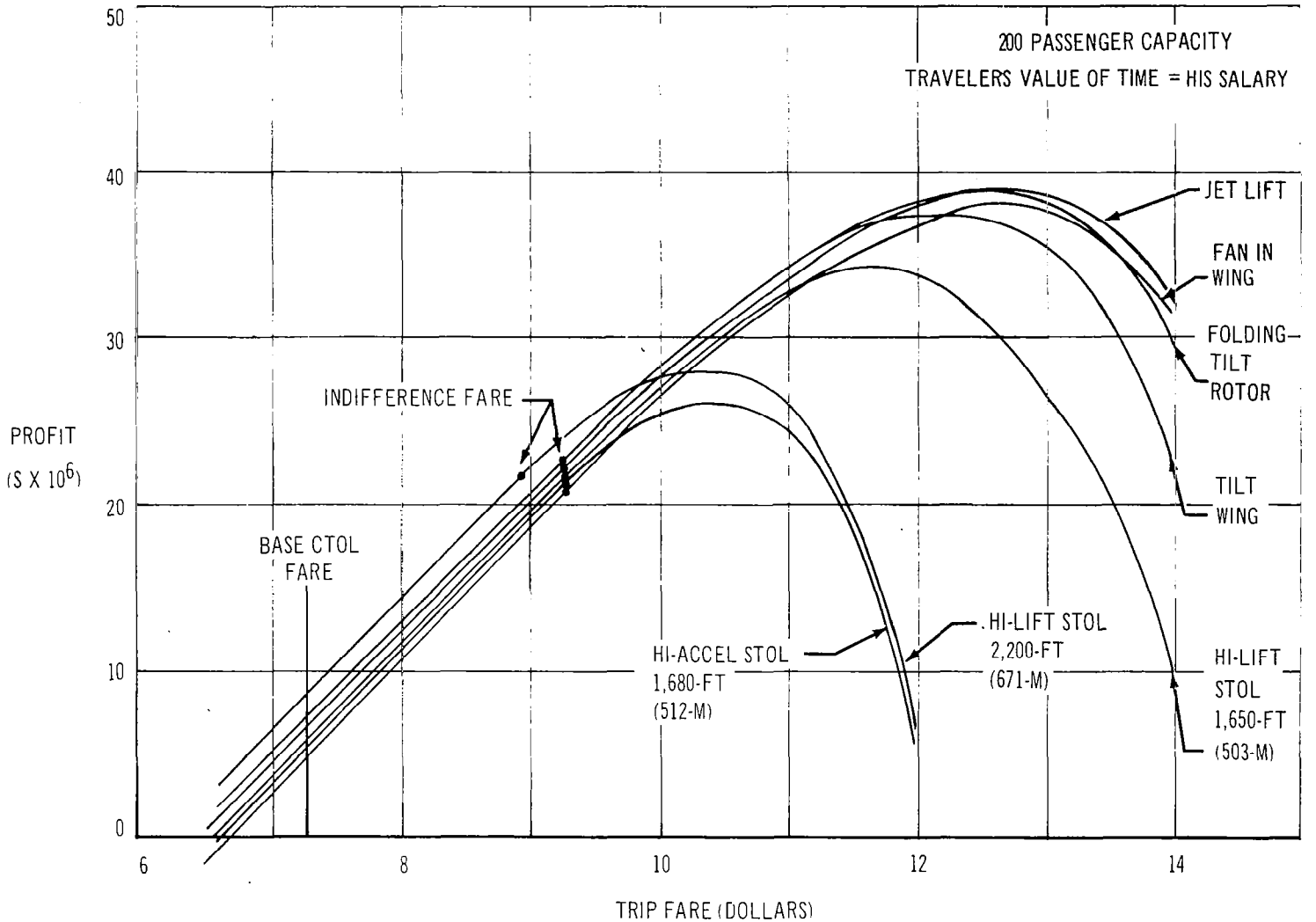

Figure 37: Optimal Fare Analysis—Northeast NYC–DCA

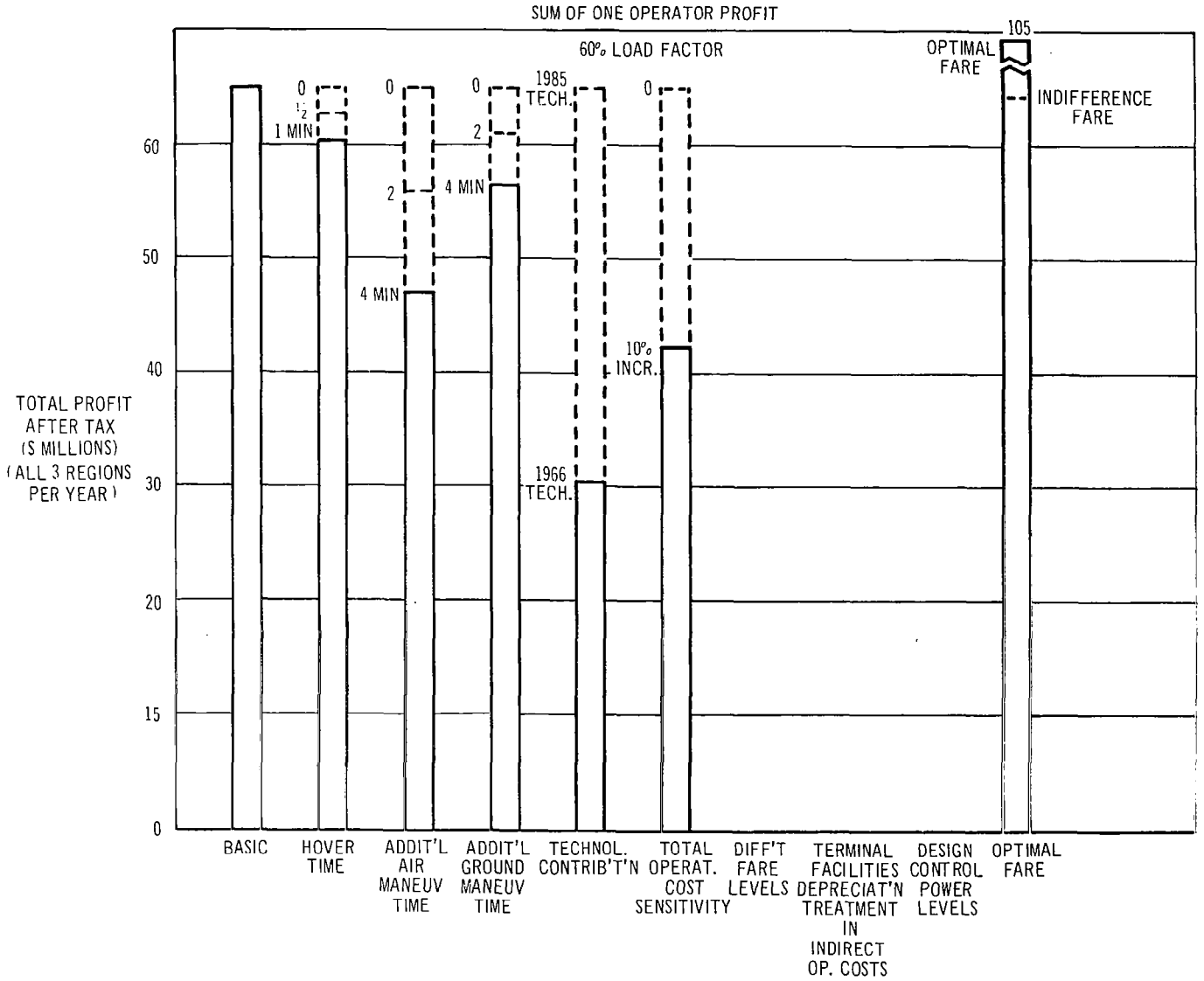

Figure 38: System Profit Concept Summary—Tilt Wing

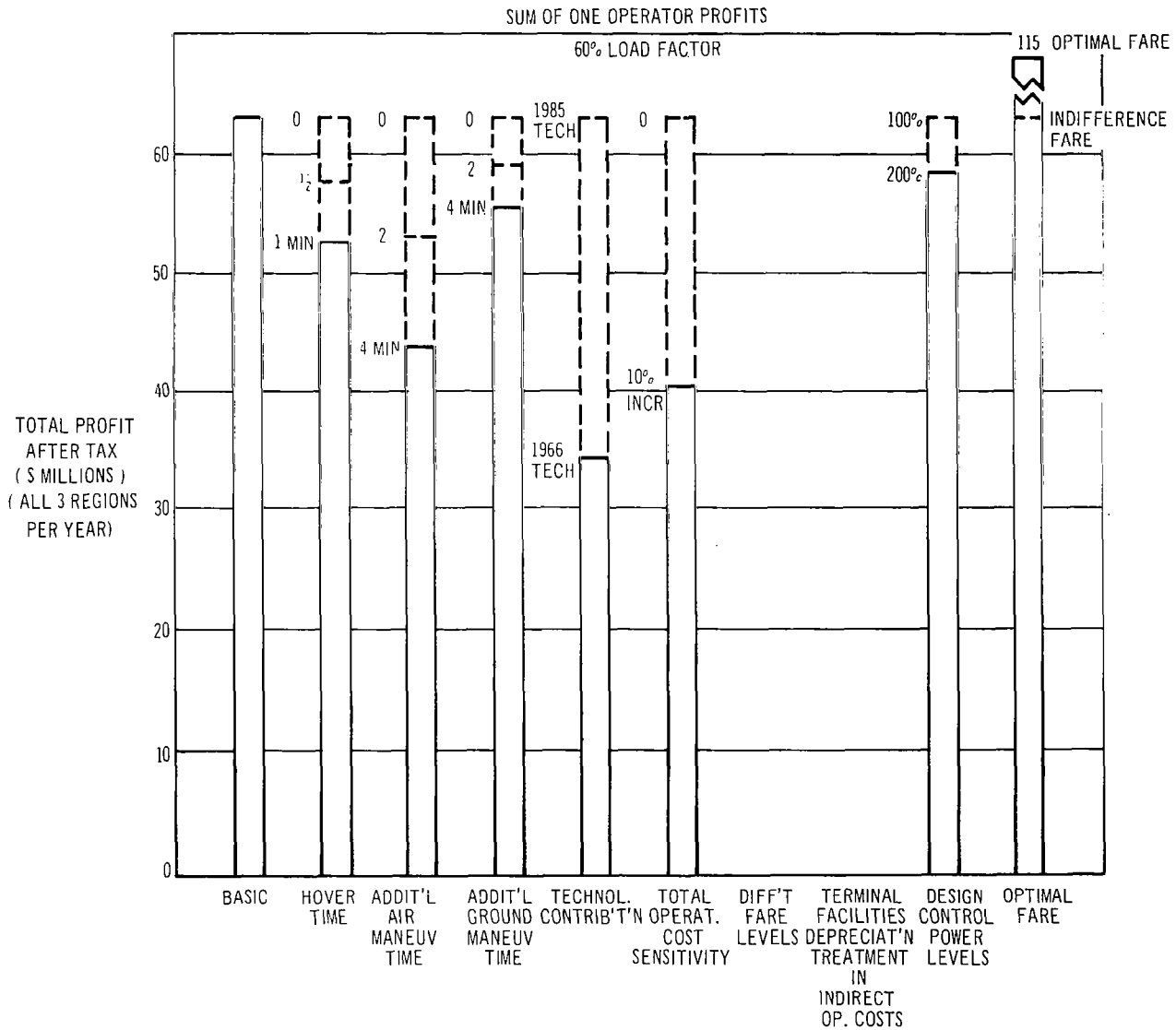

Figure 39: System Profit Concept Summary—Jet Lift

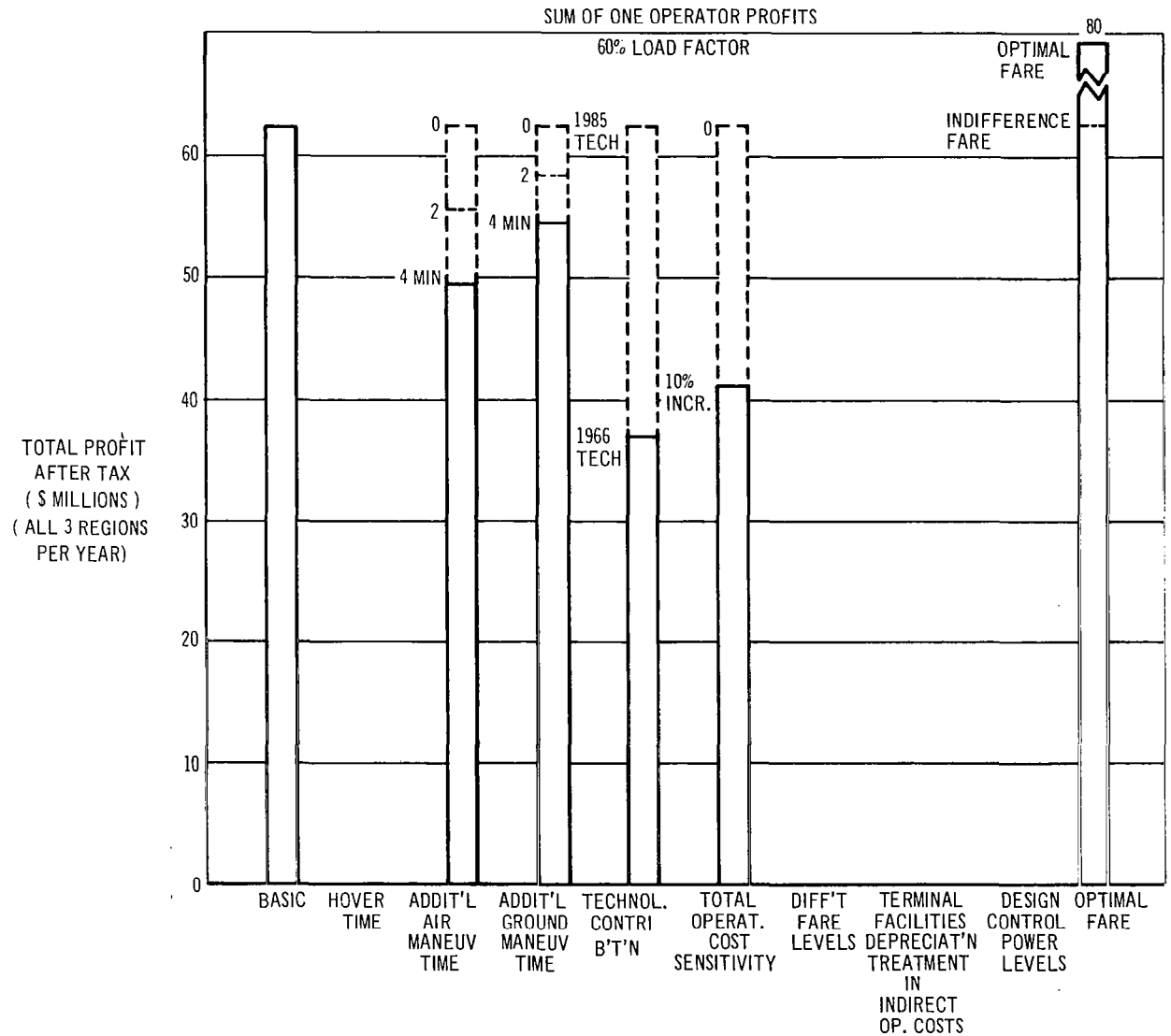

Figure 40: System Profit Concept Summary—High-Lift STOL, 2200 Feet

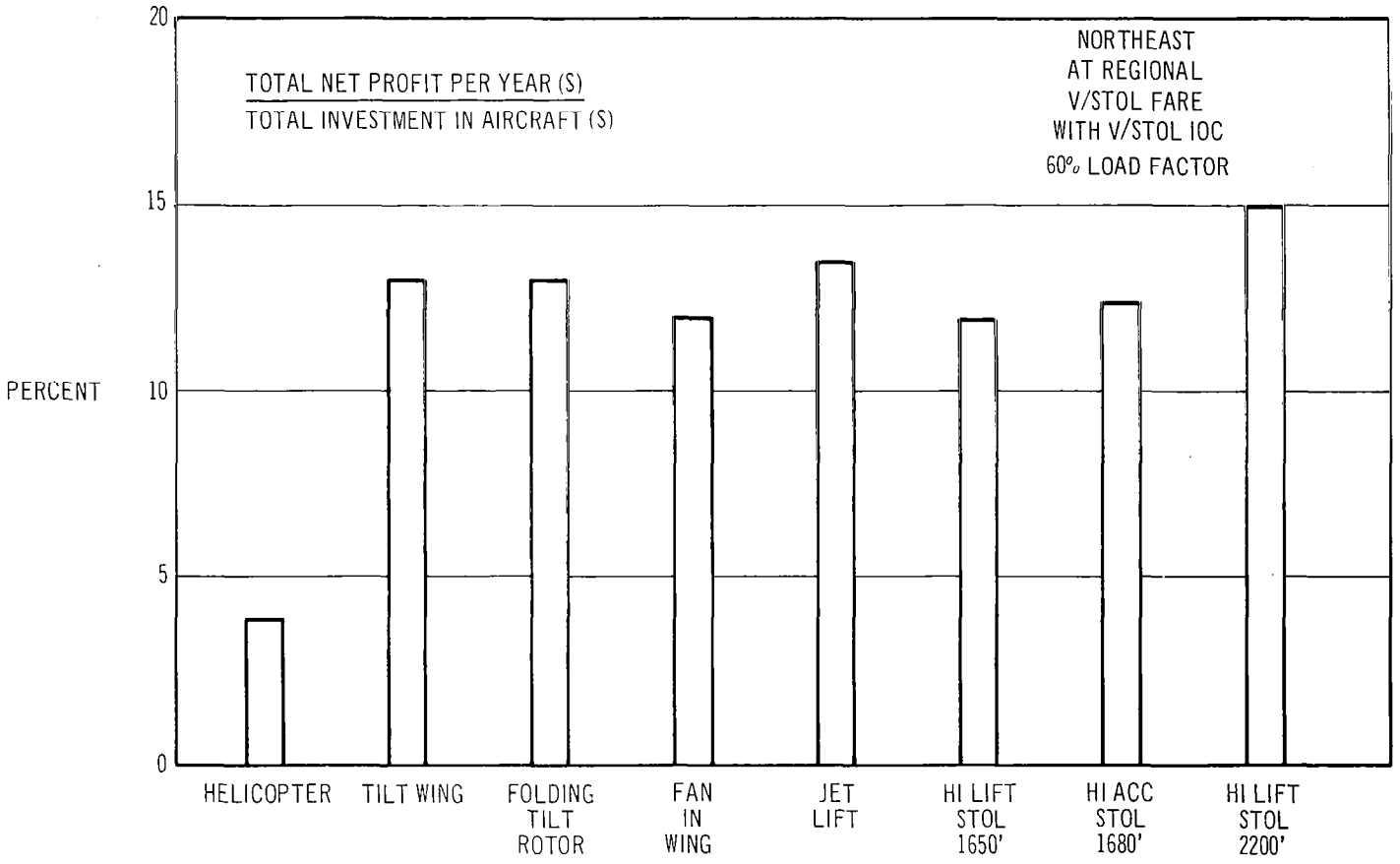

Figure 41: Profit Divided by Airplane Investment Concept Comparison—Northeast

It should be emphasized that these perceived noise level contours are established on the basis of the advanced technology assumptions presented on page 18 and on the use of current methods of noise level estimation. Specific changes in current noise levels due to predicted improvements are: a reduction of 10 PNdB for the rotor concepts which reflects the elimination of the blade bang phenomenon, and a reduction of 15 PNdB for the lift and cruise engine concepts (which consists of 6 PNdB due to removal of inlet guide vanes, 2 PNdB due to increasing rotor-stator spacing, 4 PNdB due to reduction of the fan tip speed, and 3 PNdB due to acoustic treatment of the inlet).

Four configuration noise contours are shown, a STOL concept and three VTOL concepts — jet lift, folding tilt rotor, and tilt wing (figs. 42 through 45). Takeoff and landing conditions are both shown. In all cases the contour represents the maneuver that exposes the least area of the city to the generated noise. In the case of the STOL concept, the climbing turn procedure used on takeoff to limit the noise exposure in the straight-out direction achieves this objective but creates another exposure area to one side of the runway.

The fact that the straight-out takeoff contours do not extend much beyond the landing contours appears to suggest two alternatives that ensure consistency with the noise projection in both landing and takeoff: (1) eliminate the need for climbing turn takeoff maneuvers or (2) propose landing maneuvers that involve turning descents.

It is clear, however, from these charts that the community suitability measure with respect to perceived noise is a far better criterion to use to separate the concepts than are the economic suitability measures. When the 90-PNdB contour is used as a common link between all concepts, it can be seen that the folding tilt rotor affects the least area of the city, progressing through the tilt wing and jet lift concepts to the STOL concept, affecting the greatest area of the city. Note that the folding tilt rotor and the tilt wing concepts show an 80 PNdB contour while the other two concepts do not.

It must not be overlooked, however, that these contours are based on current methods and assumptions of future achievements in sound suppression. Future research may produce PNdB reductions in the various concepts that will differ from those predicted today, so that it is not inconceivable that even this measure of concept segregation could be nullified by the fact that noise characteristics of each lift system may be brought more nearly similar to each other.

When an acceptability criterion has been developed it should be possible to determine which concepts are acceptable and which are not.

6.6.3 Passenger Suitability.—Passenger suitability is a criterion that, while difficult to quantify in many respects, can be of significant influence in the acceptability of one concept relative to another. Such factors as interior noise, induced vibration from either the lift or the cruise propulsion system, vertical and horizontal accelerations induced in the various flight modes of the aircraft, and cabin floor angle or airplane attitudes have all been assessed during this study.

A review of interior cabin noise levels of most of the concepts produced the following essentially qualitative conclusions: Noise levels during takeoff are determined primarily by the engine noise in all the nonrotor concepts. A level of 115 db is expected as compared to outputs of current jets, with wing mounted engines, of 90 to 110 db. Therefore, to achieve comparable interior noise levels on the nonrotor V/STOL concepts will require additional acoustic treatment. The principal source of engine noise is the cruise, lift/cruise or lift engine; hence fan-in-wing and STOL vehicles are expected to require as much treatment, although of a different type, as jet lift vehicles. The compartments containing the lift engines will need specific design attention. Lift engine exhaust ducts will need to be isolated from structure. Damping treatment on exhaust ducts and firewall structure and insulation blankets around the firewall will be needed to keep the lift engine ducted exhaust noises from contributing significantly to the interior sound levels.

The rotor vehicles, on the other hand, are expected to be somewhat quieter inside on takeoff. Here the principal source of interior noise will be from the propeller or rotor when the plane of spin intersects the fuselage (during transition) and from the gear box and transmission. Engine noise on takeoff will not be predominant, as the majority of the energy is extracted via the transmission rather than released at the exhaust.

Interior noise in the typical high-speed, relatively low-altitude, short-haul operation of these vehicles will come essentially from the boundary layer noise (except in the propeller spin plane of the tilt wing). All concepts are essentially the same, although in detail they may need different treatment due to differences in local shape. However, to achieve the same level of interior noise as experienced in today's airplanes at Mach 0.85 at 25 000 feet, the short-haul concepts operating at Mach 0.85 to 0.90 at 15 000 to 20 000 feet will need additional acoustical treatment.

During this study the subject of vibration has not received any quantitative analysis. It is evident from existing vehicles of the jet-propelled, propeller-propelled, or rotor-propelled types that there are different levels of structural vibration induced, usually more severe in the rotor and propeller vehicles. Thus, this study has not contributed any new visibility to the present approach of separating those concepts that exhibit rotor vibration characteristics in takeoff and cruise, those that do only in takeoff, those that exhibit propeller vibration characteristics in takeoff and flight, and those that essentially exhibit gas generator vibration characteristics during takeoff and cruise.

Induced accelerations in the horizontal and vertical directions can occur in several modes of flight and with different magnitudes in each concept. In the vertical direction, probably the most significant acceleration to the passenger is that associated with ride comfort in gusty air.

For equivalent ride comfort in all vehicles, substantially more gust alleviation is required by the STOL and rotor and tilt wing VTOL vehicles than by the jet lift or fan-in-wing VTOL. Alternatively, it could be surmised that for a

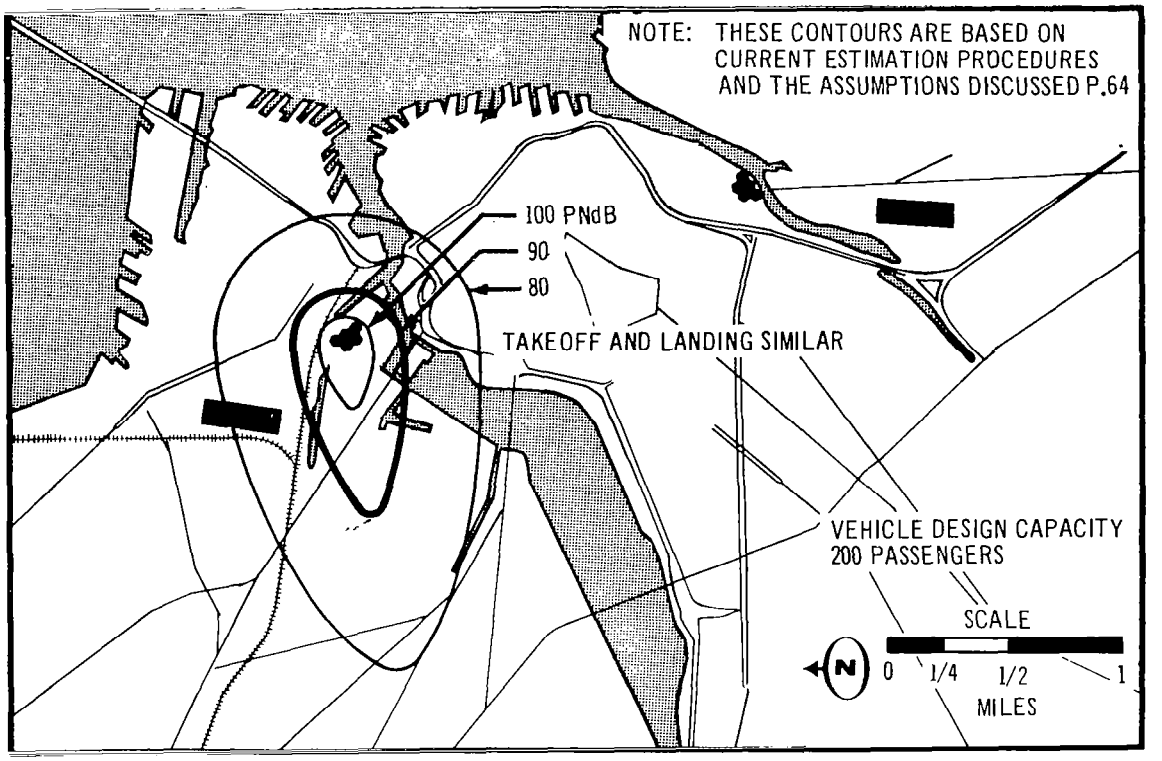

Figure 44: Tilt-Wing VTOL Noise Contours —Boston

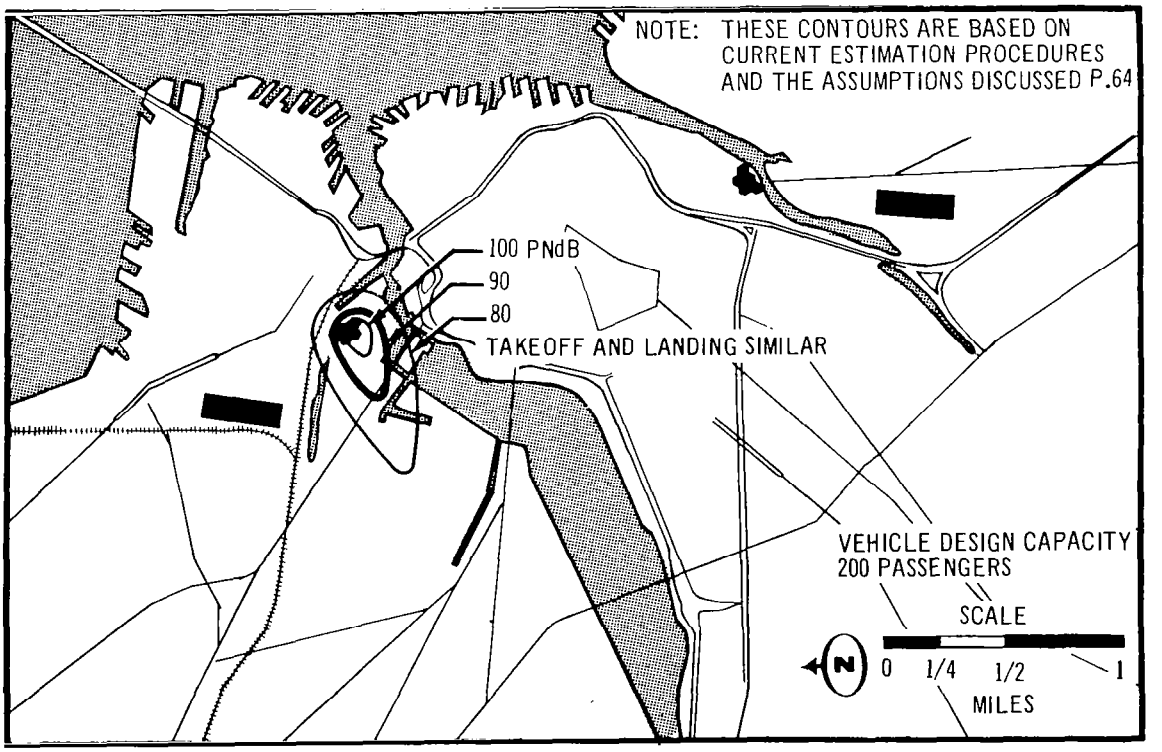

Figure 45: Folding Tilt Rotor VTOL Noise Contours —Boston

given level of gust alleviation capability, the former vehicles will have to cruise slower, and hence be less efficient than the latter. In the horizontal direction, probably the most significant acceleration to the passenger is that associated with STOL landing and takeoff. The high-acceleration STOL design uses substantial thrust for takeoff acceleration and landing deceleration. For landing, field lengths have been calculated for decelerations of 0.5 g and 1 g, on the assumption that the former is acceptable without any redesign whereas the latter deceleration is probably acceptable if the manner of passenger restraint or seat inclination is changed from today's methods. Acceleration in takeoff is of the order of 0.5 g, not much different from conventional airplane capability at light weights today.

In transition and steep descent flight paths, fore and aft acceleration is limited to 0.15 g.

It would appear then that a judgment of concept suitability from the passenger's viewpoint would conclude that, if the criteria are to be low noise, low vibration, smooth ride in cruise, and no excessive accelerations in any direction, the choice will be weighted in favor of the high wing loading, large wing-sweep, nonrotor, VTOL concepts.

NASA-Langley, 1968 — 2 CR-986