https://ntrs.nasa.gov/search.jsp?R=19680006421 2018-07-23T04:18:04+00:00Z

GCA-TR-67-13-N

ROCKET OBSERVATIONS OF ELECTRON TEMPERATURE IN THE E REGION

L. G. Smith
L. H. Weeks
P. J. McKinnon

Contract No. NASW-1402

October 1967

GCA CORPORATION
GCA TECHNOLOGY DIVISION
Bedford, Massachusetts

Prepared for

NATIONAL AERONAUTICS AND SPACE ADMINISTRATION
HEADQUARTERS
WASHINGTON, D. C.

TABLE OF CONTENTS

Title	Page
SUMMARY	1
INTRODUCTION	1
EXPERIMENTAL METHOD	2
ECLIPSE OBSERVATIONS	6
SOLAR CYCLE VARIATION	8
DISCUSSION	13
ACKNOWLEDGEMENTS	15
REFERENCES	17

ROCKET OBSERVATIONS OF ELECTRON TEMPERATURE IN THE E REGION

L. G. Smith, L. H. Weeks and P. J. McKinnon
GCA Corporation, Bedford, Massachusetts

SUMMARY

Electron temperature observations have been obtained with Langmuir probes carried on sounding rockets, principally the Nike Apache. A refinement of the instrumentation in which the rate of change of current is telemetered on a logarithmic scale has allowed the accuracy of individual measurements to be reduced to $\pm$ 25°K compared with $\pm$ 100°K obtained from direct analysis of the current-voltage characteristic. Rocket flights in Brazil during and following the solar eclipse of 12 November 1966 show that the electron temperature below 150 km remained constant; at greater heights a change of temperature was found, amounting to 300°K at 190 km. This supports the view that solar radiation does not directly determine the electron temperature of the E region. Electron temperatures are found always to be greater than the neutral gas temperature and, at a given altitude, the difference increases with increasing sunspot number.

INTRODUCTION

This paper is concerned with electron temperature in the daytime E region, particularly the problem of interpretation that exists and which has become rather controversial. Some data are presented which help resolve part of the problem but which leave other parts to be answered. We use the usual ionospheric definition of the E region: the altitude range 90 to 160 km.

The relation between electron temperature and the gas temperature was first considered in detail by Hanson and Johnson [1]* in what has now become a classic paper. The heat source is solar ultraviolet radiation which produces high energy photoelectrons. The energy of the photoelectrons is lost initially by inelastic collisions which excite the atomic and molecular constituents of the neutral gas. When the energy is less than about 2 eV the remaining energy is transferred by Coulomb interaction to the thermal electrons. The thermal electrons lose energy to the positive ions and neutral gas.

Hanson and Johnson find that under steady-state conditions the temperature difference between electrons and the neutral gas should be negligible below 150 km, while above 150 km nonequilibrium is predicted, the thermal electrons being hotter than the neutral gas. While the nonequilibrium predicted by their theory has been substantiated above 150 km the available rocket data points to nonequilibrium also throughout

---

*Numbers in [ ] represent references.

most of the E region. This is illustrated in Figure 1 which shows electron temperature profiles from two daytime and one sunrise rocket flight compared with a gas temperature model typical of mid-solar cycle conditions.

Profile 1 is the 1965 COSPAR International Reference Atmosphere model for the neutral atmosphere at local noon for a 10.7 cm solar flux of 125×10^{-22} W m^{-2} Hz^{-1}. The temperature at 150 km is 670°K. Profile 2 is the electron temperature observed in Brazil on the day of the solar eclipse but with the ionosphere recovered from the effect of the eclipse. The electron temperature at 150 km is 1140°K, which exceeds the gas temperature by 470°K. The third profile, shows the highest value of electron temperature that we have seen at 150 km in the daytime. It is 1650°K, nearly 1000°K above the gas temperature. The fourth profile shows the largest values of electron temperature we have observed under any conditions. The electron temperature at 150 km is 2380°K. It is significant that this observation was made just before ground sunrise. Dalgarno and McElroy [2] have pointed out that unusually high temperatures can be expected at this time.

EXPERIMENTAL METHOD

In the Langmuir probe technique and its many variations, an electrode is inserted into the plasma and the electron temperature is obtained from the variation of current with voltage. The shape of the electrode is not critical; we have used the nose tip of Nike Apache and Nike Cajun rockets [3]. The location is chosen for convenience and simplicity.

The analysis of individual current-voltage curves is tedious and several methods of partial or complete data reduction by on-board techniques have been developed. Some methods superimpose small ac signals on the sweep voltage. We have recently introduced a simpler approach in which the rate of change of current is telemetered on a logarithmic scale. The accuracy of individual measurements is ± 25 degrees which may be compared with ± 100 degrees usual with direct analysis of the current-voltage curves.

The circuit of the probe is shown schematically in Figure 2. When the double-pole relay is energized thorwing it into the opposite position to that shown, the current-voltage curve is obtained at the output of the linear electrometer. This is telemetered on one channel of an FM/FM system and provides a check on the further processing of the signal in the instrument. The displacement current in a small capacitor connected to the output of the linear electrometer is measured by the logarithmic electrometer so that its output is proportional to log (di/dV). This output is telemetered on a second channel.

The appearance of the telemetry record is shown in Figure 3. The upper trace is the output of the linear electrometer (the nonlinearity at large currents is introduced in the telemetry system) while the lower is

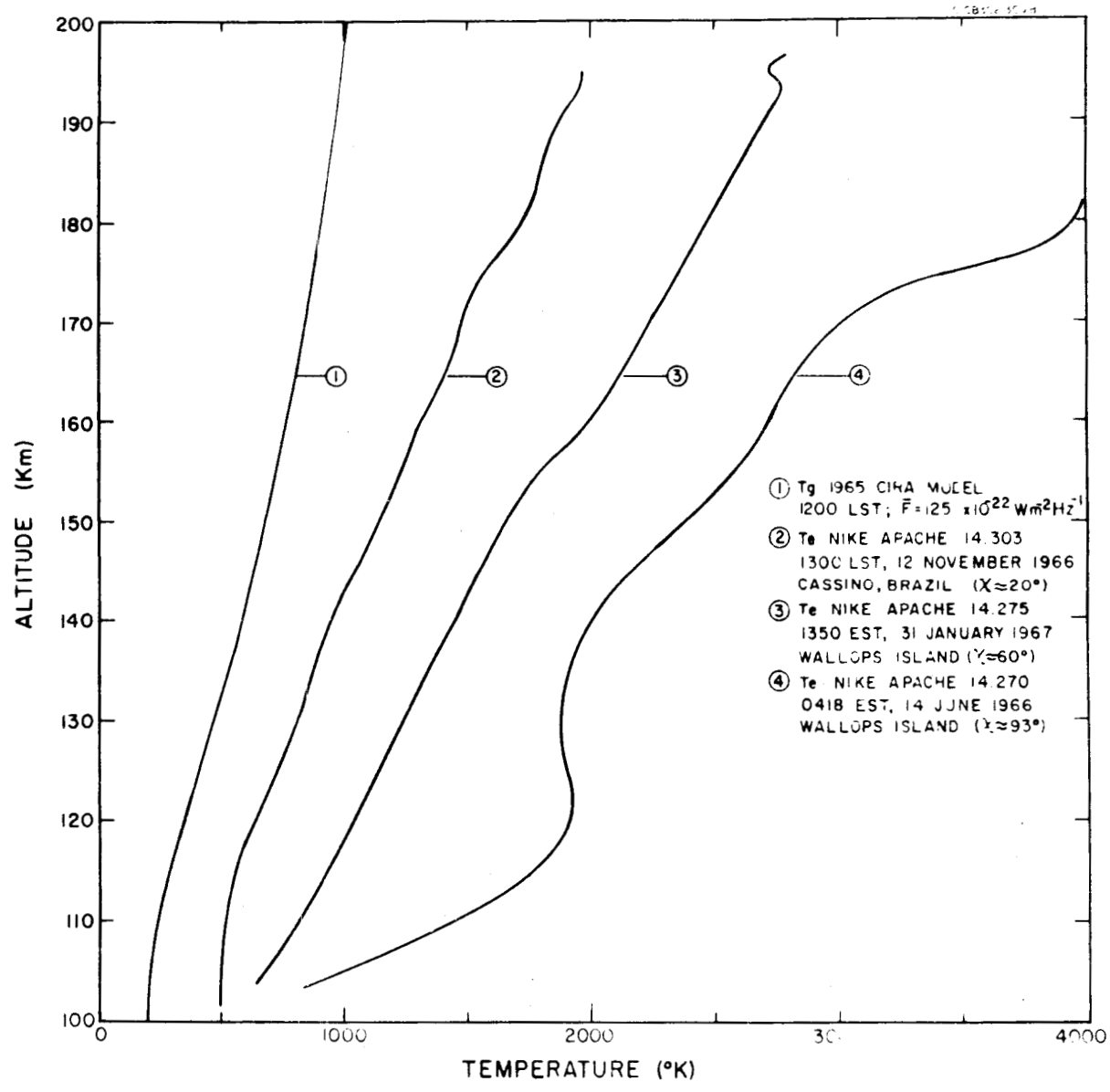

Figure 1. Electron temperature profiles from two daytime and one sunrise rocket flight compared with a neutral gas temperature model.

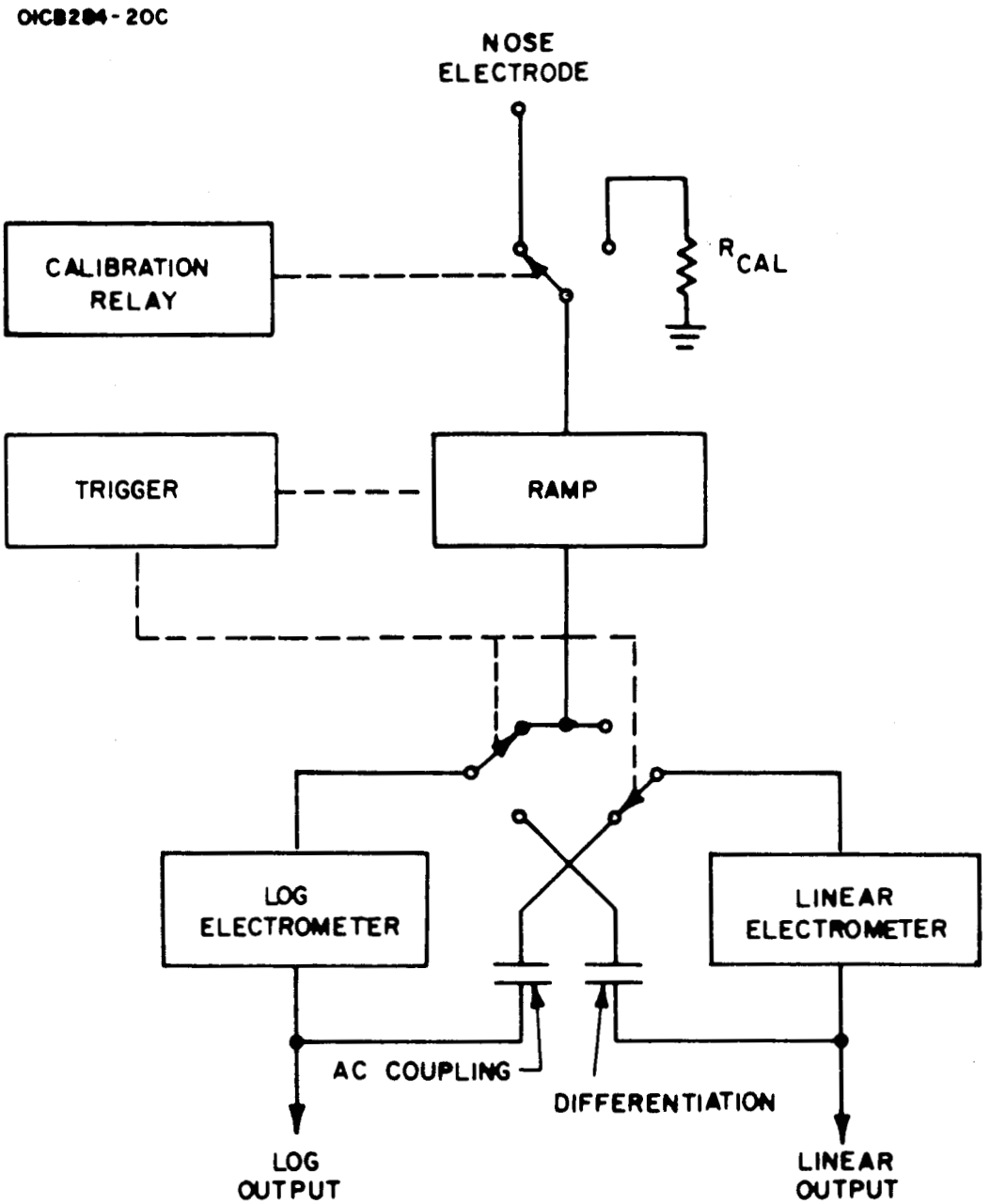

Figure 2. Schematic of probe circuit.

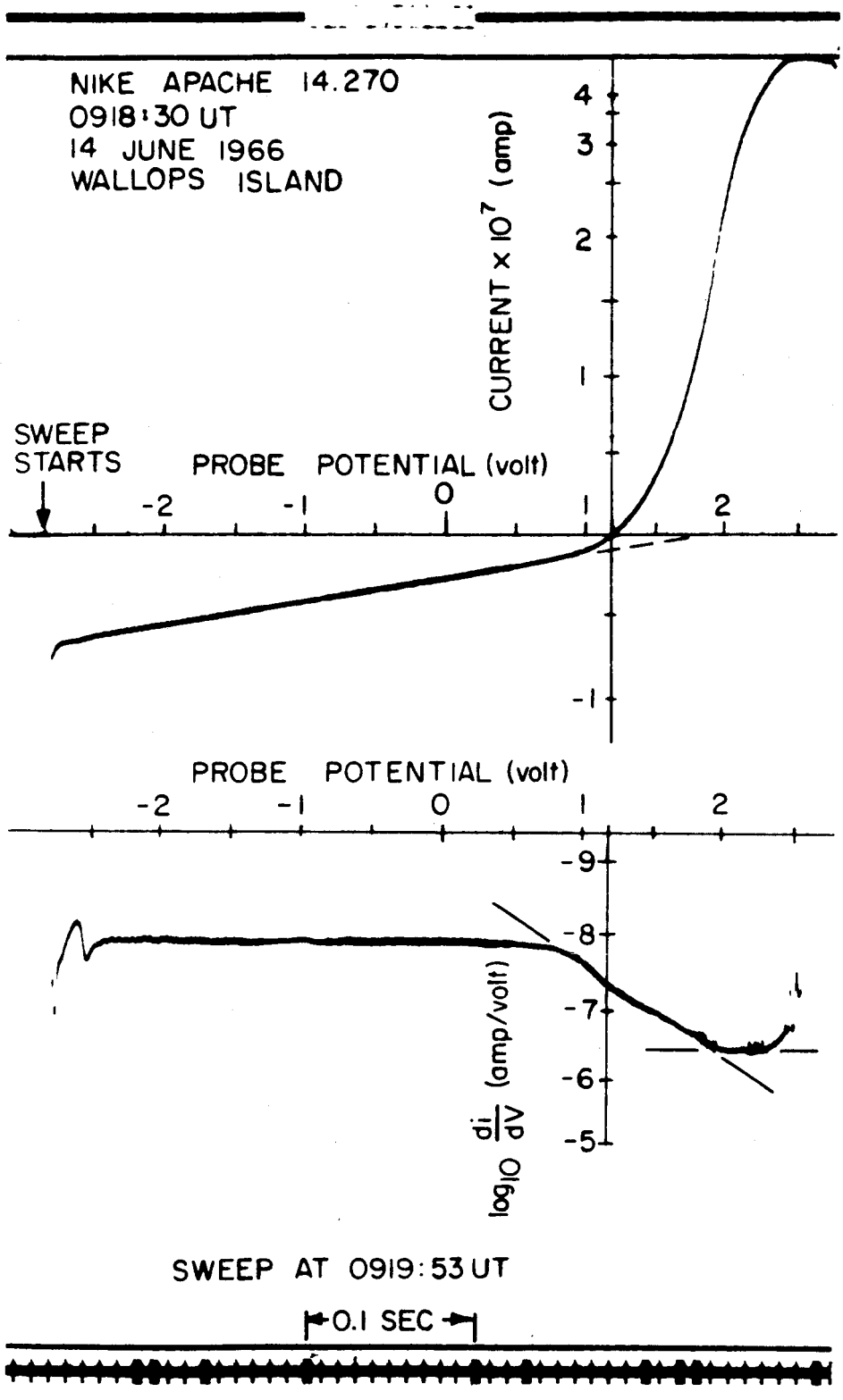

Figure 3. Section of telemetry record showing outputs of linear electrometer (upper trace) and logarithmic electrometer (lower trace).

the output of the logarithmic electrometer. The slope of the lower trace gives a direct measure of the electron temperature with the advantages of improved accuracy and quicker and easier data analysis.

Following the voltage sweep, the double-pole relay is de-energized and the probe current (at + 2.7 volts) is measured on the logarithmic electrometer while the linear electrometer is used to amplify the fine structure of the electron density profile. Data from the fixed-voltage mode of operation is not presented here.

The better quality of the data from flights using the new instrument has emphasized an interesting phenonemon which appears in varying degrees on all flights. This is a relatively large difference between ascent and descent profiles of electron temperature in the lower E region. An extreme case of this is shown in Figure 4 which also serves to illustrate the method of smoothing the data: five consecutive values of temperature are averaged and a smooth curve drawn through these average values. As seen in the figure initial values of electron temperature are about 1000°K at 85 km. The temperature decreases as the rocket ascends to 115 km then increases to the apogee point (197 km on this flight). On descent lower electron temperatures are observed and the high values at low altitudes are not reproduced. On other flights the same high value is seen at 85 km on ascent but the decrease in temperature is more rapid.

It is believed that the electron temperature at altitudes below about 120 km is not the true ambient value but the result of an aerodynamic effect. The difference between the effect on ascent and descent is attributed to the attitude of the spin-stabilized vehicle: the rocket descends with the nose tip electrode trailing until turning over at about 100 km. Because of this apparent local heating of the electrons the descent profile is preferred. The three profiles of Figure 1 are, in fact, those of the descending rocket.

The anomalous values of electron temperature observed in the low E region indicate that reported values of electron temperature in sporadic-E layers may be too large. The only conclusion that can safely be drawn from published data is that the electron temperature in a sporadic-E layer does not exceed 750°K [4].

ECLIPSE OBSERVATIONS

The variation of electron temperature during a solar eclipse provides further insight into the problem of E-region electron temperatures. Observations by Smith, et al., [5] at Fort Churchill during the solar eclipse of 20 July 1963 indicated a decrease in electron temperature at altitudes between 160 and 190 km during the eclipse but no significant change between 120 and 160 km. This experiment has been repeated during the solar eclipse of 12 November 1966 using the probe described in the previous section.

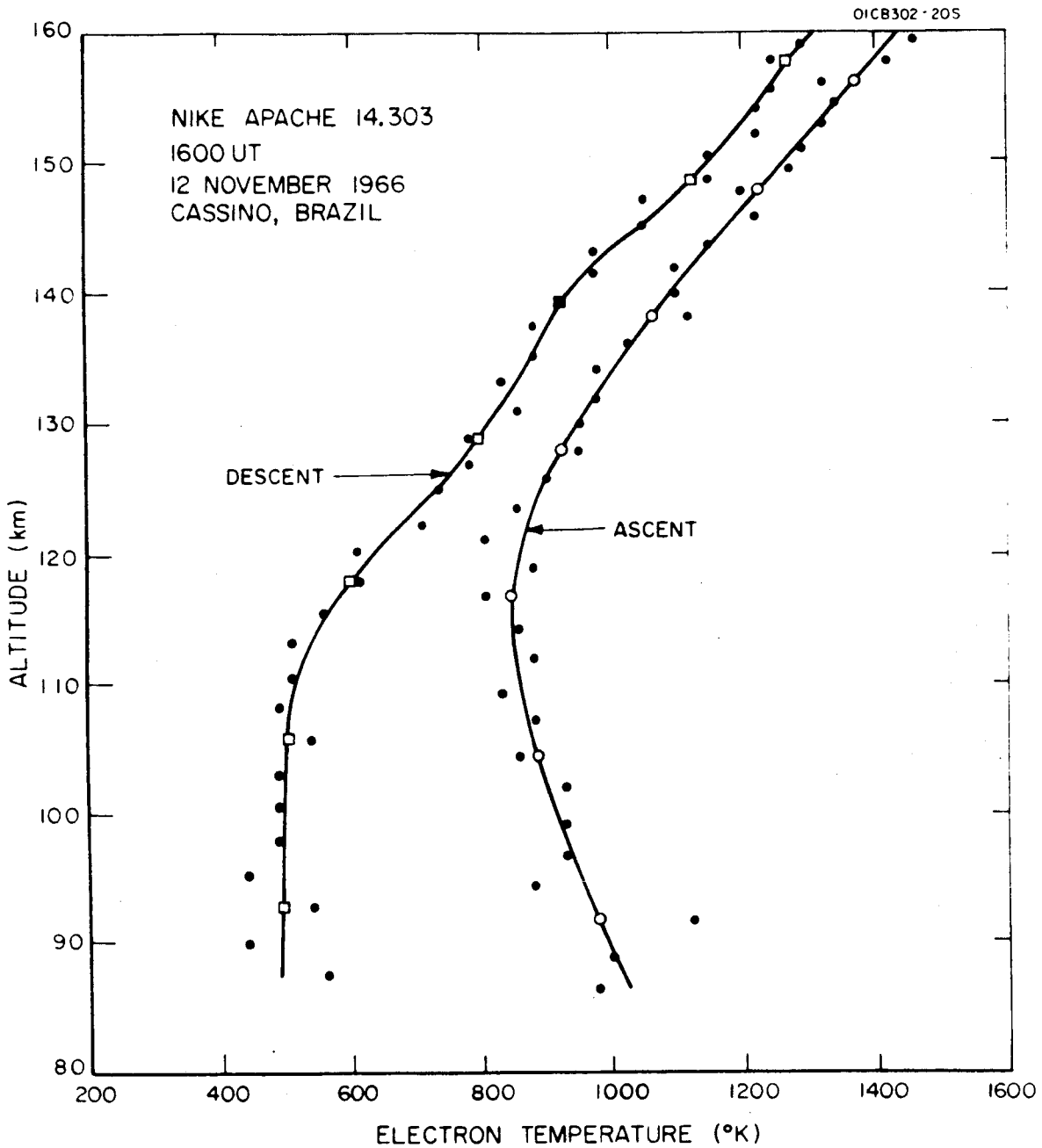

Figure 4. Electron temperature data to 160 km showing an extreme case of difference between ascent and descent profiles.

The rockets were launched from a temporary site at Cassino in southern Brazil. Three profiles of electron temperature were obtained. Two are very close to totality: the first rocket (launch time 1406 UT) entered totality at 94 km on descent, the second rocket (launch time 1410 UT) emerged from totality at 84 km on ascent. The third rocket was launched at 1600 UT, 25 minutes after fourth contact. The electron density profile of this last flight was given in Figure 1.

The change in electron temperature during the eclipse is shown in Figure 5. The difference between the electron temperature following the eclipse and the two mid-eclipse flights is plotted against altitude. The descent data is used and the individual profiles have been smoothed by the process described in the previous section. Some data from the rocket launched at 1406 UT is missing. Within the experimental error the temperature does not change below 150 km. Above 150 km a nearly linear change with altitude is found amounting to 300°K at 190 km.

The new data with its greater accuracy therefore supports the earlier observation that the electron temperature of the E region does not change during a solar eclipse.

SOLAR CYCLE VARIATION

The variability of electron temperature in the E region is quite evident in the published data of Spencer, et al., [6], Brace, et al., [7], Spencer, et al., [8] and others. Some variation can be expected, corresponding to the change in neutral gas temperature as given by the 1965 CIRA model. Enough data is now available to look for systematic variation of E region electron temperature during the solar cycle. Since the electron density of this region shows a rather well defined variation with sunspot number the daytime values of electron temperature at 145 km have been examined in relation to the monthly mean Zurich sunspot number ($\overline{Rz}$). This height has been selected for two reasons: (a) the electron temperature is high and the measurement relatively more accurate, and (b) the anomalous heating effect at lower altitudes is avoided.

Data from 24 rocket flights is presented in Table 1 and Figure 6. Included are 7 flights from References 6 through 8 identified by S and B. In the table, χ is solar zenith angle. The values observed on ascent and descent are identified in the figure by separate symbols and a line joins values from the same flight. In two cases only ascent values are available. The corresponding values of neutral gas temperature obtained from the 1965 CIRA model for the appropriate monthly average 10.7 cm flux value are also included as are the constant temperatures of the 1959 ARDC and 1962 U.S. model atmosphere. Some data points have been moved to a slightly greater or smaller value of the sunspot number for clarity. These cases can be identified by the corresponding gas temperature values.

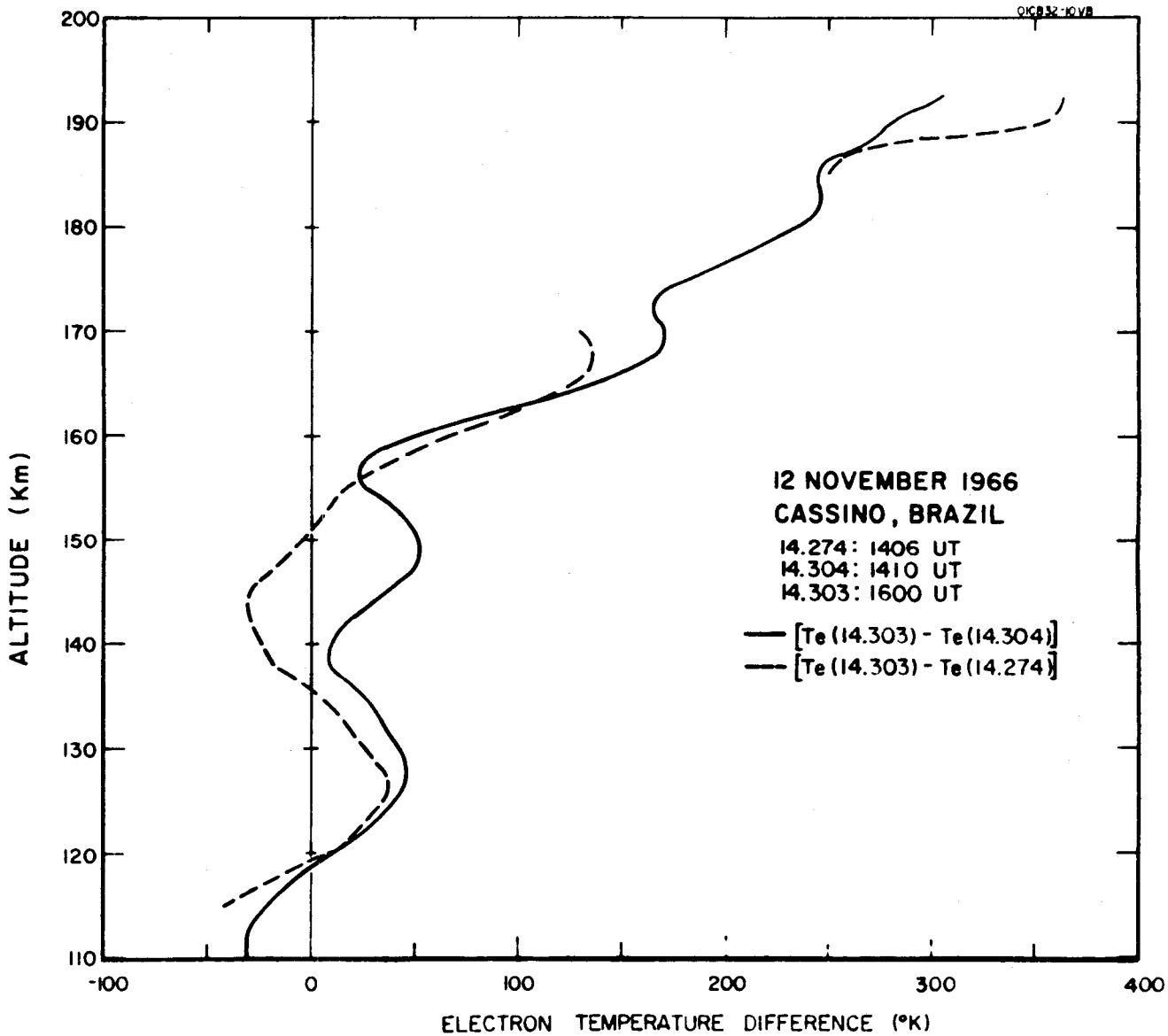

Figure 5. The change in electron temperature observed during the solar eclipse of 12 November 1966. Some data from Nike Apache 14.274 are missing.

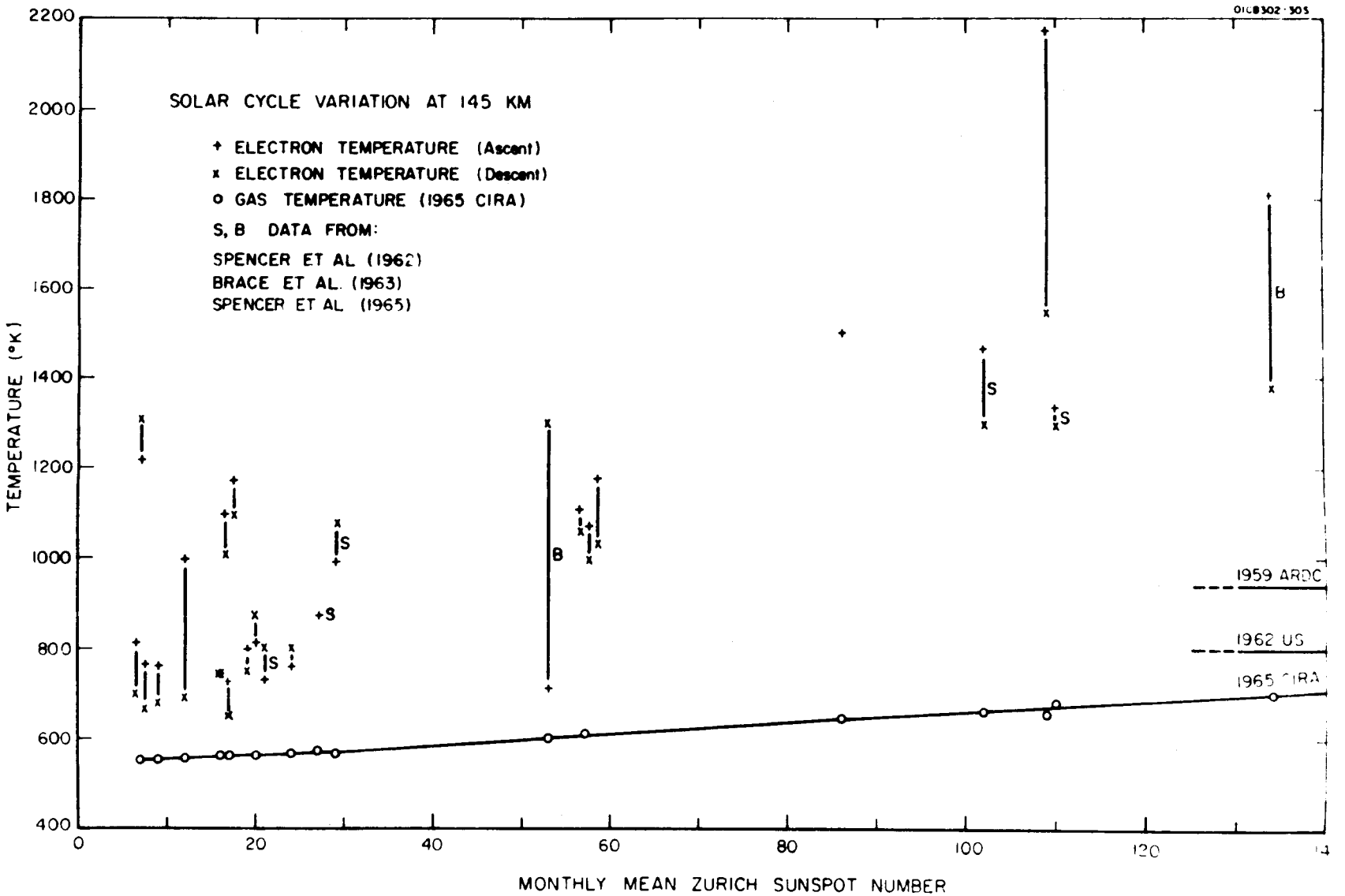

Figure 6. Daytime electron temperatures from rocket observations plotted against the monthly mean Zurich sunspot number. Corresponding gas temperatures from the 1965 COSPAR International Reference Atmosphere are also shown.

Table 1: Electron and Gas Temperatures at 145 km

Rocket (1)	Date	Time (2)	Site (3)	χ^o	$\overline{Rz}$	Te ^oK (Ascent)	Te ^oK (Descent)	Tg ^oK (1965 CIRA)
10.25	8 Dec 1960	1152	W.I.	60	86	1500	---	645
14.86	27 Feb 1963	1430	W.I.	56	24	770	790	565
14.87	28 Mar 1963	1506	W.I.	56	17	720	650	560
14.88	14 Jul 1963	1503	F.C.	48	20	790	750	560
14.94	20 Jul 1963	1610	F.C.	56	20	810	860	560
14.143	16 Apr 1964	1605	W.I.	61	9	750	690	550
14.228	20 Mar 1965	0820	Ship	61	12	990	700	555
14.230	5 Apr 1965	0846	Ship	59	7	810	700	550
14.231	9 Apr 1965	1418	Ship	59	7	750	670	550
14.232	12 Apr 1965	1214	Ship	67	7	1220	1300	550
14.246	17 Jun 1965	1641	W.I.	61	16	740	740	560
14.244	15 Sep 1965	1528	W.I.	59	17	1090	1010	560
14.247	15 Dec 1965	1200	W.I.	61	17	1160	1100	560
14.274	12 Nov 1966	1106	Brazil	22	57	1100	1070	610
14.304	12 Nov 1966	1110	Brazil	21	57	1060	1000	610
14.303	12 Nov 1966	1300	Brazil	19	57	1170	1040	610
14.275	31 Jan 1967	1350½	W.I.	60	109	2180	1550	655
——(4)								
6.01	16 Mar 1960	1526	F.C.	73	102	1470	1310	660
6.02	15 Jun 1960	1656	F.C.	62	110	1330	1300	680
6.03	3 Aug 1960	1126	W.I.	25	134	1810	1390	700
6.04	26 Mar 1961	1156	W.I.	40	53	710	1300	600
6.06	20 Nov 1962	1641	W.I.	≈90	27	870	----	570
6.07	18 Apr 1963	1604	W.I.	60	29	990	1070	565
6.08	20 Jul 1963	1654	W.I.	63	20	730	790	560

Notes:
(1) Prefix 10 = Nike Cajun; 14 = Nike Apache; 6 = Spaerobee.
(2) All times are local standard time.
(3) W.I. = Wallops Island, Va. (37°50'N, 75°29'W).
F.C. = Fort Churchill, Man. (58°44'N, 93°49'W).
Ship = USNS Croatan (14.228: 12°00'S, 78°00'W) (14.231: 44°15'S, 75°40'W)
(14.230: 29°34'S, 75°13'W) (14.232: 58°19'S, 78°00'W)
Brazil = Cassino, R.G. du Sol (32°12'S, 52°10'W).
(4) Following data from Spencer et al. (1962), Brace et al. (1963) and Spencer et al. (1965).

The first point to note is that there is general agreement between the new data and that given by Spencer and Brace, supporting their contention of nonequilibrium in the E region. Both sets of data also show some cases of large, unexplained, differences between ascent and descent values.

The second point is that near sunspot minimum the electron temperature at 145 km is often only 100 to 200°K above the gas temperature.

The third, and most important point, is that the electron temperature shows a definite increase from sunspot minimum toward sunspot maximum; an increase which is much greater than the increase in neutral gas temperature.

The scatter of individual values is probably real but does not show any correlation with latitude, solar zenith angle, or any daily index of solar activity.

DISCUSSION

The principal conclusions of this study of electron temperature in the E regions are as follows:

1. The electron temperature below 150 km remains constant during a solar eclipse, even though this temperature may be several hundred degrees above the neutral gas temperature;

2. The average electron temperature at 145 km increases from sunspot minimum toward sunspot maximum;

3. The electron temperature at 145 km is always greater than the neutral gas temperature; at sunspot minimum the difference on some days is as small as 100°K; for $\overline{Rz} > 100$ the difference is no less than 600°K.

The eclipse observations support the analysis of Hanson and Johnson and indicate that solar radiation does not directly determine the electron temperature of the E region. The same data appear to conflict with calculations of Dalgarno, et al., [9] who find that solar radiation can produce nonequilibrium in the E region down to 120 km.

The rocket data at 145 km near sunspot minimum are in generally good agreement with observations by Evans [10] using the incoherent back-scatter radar technique. He finds the monthly average value of Te-Tg ranging from 50°K to 200°K for five months in 1964. The corresponding values of $\overline{Rz}$ range from 5 to 9.

In the lowest part of the E region a measurement of electron collision frequency by Mechtly, et al., [11] has established that thermal equilibrium exists up to an altitude of 105 km. This observation (Nike Apache 14.143)

was made near sunspot minimum: Rz = 9. The probe on this same flight gave a value of electron temperature of 690°K (descent value), 140°K above the gas temperature derived from the 1965 CIRA model.

The large variation of electron temperature during the solar cycle makes it very desirable to continue systematic observations of the E region at least to the next solar maximum, predicted for October 1968.

PRECEDING PAGE BLANK NOT FILMED.

ACKNOWLEDGEMENTS

The research described here was supported by the National Aeronautics and Space Administration. Most of the rocket flights were conducted as part of a joint program with the Aeronomy Laboratory of the University of Illinois, under the direction of Dr. S.A. Bowhill.

PRECEDING PAGE BLANK NOT FILMED.

REFERENCES

1. Hanson, W.B. and Johnson, F.S., "Electron Temperatures in the Ionosphere," Mem. Soc. Roy. Sci. Liege, S5, 4, 390-424, 1961.

2. Dalgarno, A. and McElroy, M.B., "Ionospheric Electron Temperatures near Dawn," Planet. Space Sci., 13, 143-145, 1965.

3. Smith, L.G., "Rocket Observations of Sporadic E and Related Features of the E Region," Radio Sci., 1, 178-186, 1966.

4. Smith, L.G., "Rocket Measurements," Radio Sci., 1, 244-245, 1966.

5. Smith, L.G., Accardo, C.A., Weeks, L.H. and McKinnon, P.J., "Measurements in the Ionosphere During the Solar Eclipse of 20 July 1963," J. Atmos. Terr. Phys., 27, 803-829, 1965.

6. Spencer, N.W., Brace, L.H. and Carignan, G.R., "Electron Temperature Evidence for Nonthermal Equilibrium in the Ionosphere," J. Geophys. Res., 67, 157-175, 1962.

7. Brace, L.H., Spencer, N.W. and Carignan, G.R., "Ionosphere Electron Temperature Measurements and Their Implications," J. Geophys. Res., 68, 5397-5412, 1963.

8. Spencer, N.W., Brace, L.H., Carignan, G.R., Taeusch, D.R. and Niemann, H., "Electron and Molecular Nitrogen Temperature and Density in the Thermosphere," J. Geophys. Res., 70, 2665-2698, 1965.

9. Dalgarno, A., McElroy, M.B. and Walker, J.C.G., "The Diurnal Variation of Ionosphere Temperatures," Planet. Space Sci., 15, 331-345, 1967.

10. Evans, J.V., "Electron Temperature and Ion Composition in the F1 Region," J. Geophys. Res., 72, 3343-3355, 1967.

11. Mechtly, E.A., Bowhill, S.A., Smith. L.G. and Knoebel, H.W., "Lower Ionosphere Electron Density and Collision Frequency from Rocket Measurements of Faraday Rotation, Differential Absorption and Probe Current," J. Geophys. Res. (to be published).