https://ntrs.nasa.gov/search.jsp?R=19680019310 2018-07-26T20:24:06+00:00Z

NASA CR 61210

ULTRASONICS. VOLUME II - EQUIPMENT

Prepared under Contract NAS 8-20185 by

Convair Division
General Dynamics Corporation
San Diego, Calif.

for George C. Marshall Space Flight Center

NATIONAL AERONAUTICS AND SPACE ADMINISTRATION

GPO PRICE $ _____

CFSTI PRICE(S) $ _____

Hard copy (HC) _____

Microfiche (MF) _____

ff 653 July 65

FACILITY FORM 602

N68-28782 (ACCESSION NUMBER)

262 (PAGES)

CR-61210 (NASA CR OR TMX OR AD NUMBER)

(THRU)

1 (CODE)

15 (CATEGORY)

Ultrasonics - Vol. II - Equipment
CR 61210
N68-28782

TABLE OF CONTENTS

	Page
Introduction	iii
Instructions	v
Chapter 1 - Transducers	1-1
Piezoelectric Materials	1-1
Transducer Sensitivity	1-8
Resolution or Resolving Power	1-14
Influence of Transducer Size on Sound Propagation	1-19
Frequency and Its Effect on Transducer Application	1-27
Contact and Immersion Transducers	1-35
Straight and Angle Beam Transducers	1-35
Curved Shoes	1-44
Identification of Angle Beam Transducers	1-46
Acoustical Lenses	1-49
Collimators	1-61
Water Column Transducers	1-63
Wheel Type Transducers	1-63
Double Transducers	1-67
Chapter 2 - Couplants	2-1
Purpose	2-1
Requirements	2-2
Chapter 3 - Standard Reference Blocks and Calibration Blocks	3-1
Standard Reference Blocks	3-1
Alcoa Series A Area Amplitude Blocks	3-5
Alcoa Series B and Hitt Distance Amplitude Blocks	3-10
ASTM Reference Blocks	3-17
Special Reference Standards	3-21
Calibration Blocks	3-24
IIW Calibration Block	3-25
Miniature Angle Beam Block	3-35
Reference Plate	3-35
Chapter 4 - Generator/Indicator Equipment	4-1
Pulse-Echo/Through Transmission Instruments	4-1
General Description	4-1
Power Switch	4-3

TABLE OF CONTENTS (CONT)

	Page
Intensity Control	4-4
Sweep Line	4-7
Initial Pulse	4-8
First Back Reflection	4-13
Discontinuity Indication	4-14
Markers	4-17
Indication Amplitude	4-19
CRT Screen Scale	4-20
Screen Illumination Control	4-20
Vertical and Horizontal Centering Controls	4-23
Focus and Astigmatism Controls	4-25
Sensitivity or Gain Controls	4-25
Sweep Delay and Sweep Length Controls	4-27
Pulse Repetition Rate Control	4-35
Pulse Length Control	4-37
Reject Control	4-38
Flaw-Alarm/Gating Circuits	4-40
Distance Amplitude Correction Control	4-43
Standardizing	4-46
Resonance Instruments	4-61
General Description	4-61
Typical Direct Readout CRT Display Resonance Tester	4-64
Precalibrated Scales	4-64
Brightness Control	4-69
Sensitivity Control	4-70
Sweep Control	4-73
Calibrate Control	4-74
Standard and Special Sweep Settings	4-77
Chapter 5 - Accessories	5-1
C-Scan Recorder	5-1
Automatic Scanning Equipment	5-5
Carriage	5-9
Manipulator	5-9
Scanner Tube	5-9

INTRODUCTION

This is the second volume of the ultrasonic ~~testing~~ series. It is assumed that you have completed the ~~first volume of ultrasonic testing~~ Basic Principles and its prerequisites. The knowledge obtained from them is necessary for you to properly benefit from this handbook.

In Volume I you were introduced to the theory of high frequency sound and the basic principles of ultrasonics as applied to nondestructive testing. At this point, you should be aware of the various ultrasonic testing systems, techniques and displays, and the affect of discontinuities within a specimen on the behavior of sound waves.

In Volume II you will learn about ultrasonic test equipment. Many types of transducers are described, their general capabilities presented and common nomenclature defined. Various types of couplants are discussed. The common standard reference blocks and calibration blocks are described and their purpose explained. Typical pulse-echo and resonance instruments are described together with their primary controls. You will learn about C-Scan recorders and both manual and automatic scanning equipment used for immersion testing. Upon completion of this volume, you will be familiar with the equipment used in ultrasonic testing and with its operation.

INSTRUCTIONS

The pages in this book should not be read consecutively as in a conventional book. You will be guided through the book as you read. For example, after reading page 3-12, you may find an instruction similar to one of the following at the bottom of the page —

- Turn to the next page
- Turn to page 3-15
- Return to page 3-10

On many pages you will be faced with a choice. For instance, you may find a statement or question at the bottom of the page together with two or more possible answers. Each answer will indicate a page number. You should choose the answer you think is correct and turn to the indicated page. That page will contain further instructions.

As you progress through the book, ignore the back of each page. THEY ARE PRINTED UPSIDE DOWN. You will be instructed when to turn the book around and read the upside down print pages.

As you will soon see, it's very simple — just follow instructions.

Turn to the next page.

In ultrasonic testing the eye of the system is the transducer. The transducer sees the condition of the material and relays the information back to the instrument where it is displayed, usually, on a cathode-ray tube (CRT) screen.

As you know from the previous volume, the crystals of ultrasonic transducers are made from piezoelectric materials. The three most common piezoelectric materials used in ultrasonic transducers are quartz, lithium sulphate, and polarized ceramics. The most common ceramics are barium titanate, lead metaniobate, lead zirconate, and lead zirconate titanate.

In the past, quartz transducers were used almost exclusively but with the development of new materials, quartz is being used less and less. Quartz has excellent chemical, electrical, and thermal stability. It is insoluble in most liquids and is very hard and wear resistant. Quartz also has good uniformity and resists aging. Unfortunately it is the least efficient generator of acoustic energy of the commonly used materials. It also suffers from mode conversion interference and requires high voltage to drive it at low frequencies.

In recent years the use of quartz in ultrasonic transducers has been reduced because...

it is insoluble in most liquids and is very hard and wear resistant . . . . . Page 1-2
of the development of new and more efficient materials . . . . . Page 1-3

From page 1-1

It is true that quartz is insoluble in most liquids and is very hard and wear resistant, but these are reasons for its continued use, especially in contact testing.

Turn to page 1-3.

Right! Because of the development of new and more efficient materials, quartz is now being used less frequently for ultrasonic sound generation.

Developments in polarized ceramic transducers have produced the most efficient generators of ultrasonic energy. They also operate well on low voltage, are practically unaffected by moisture and are usable up to about 300°C. They are limited however by their relatively low mechanical strength, some mode conversion interference, and a tendency to age.

An important advantage of using polarized ceramic transducers is that they...

operate well at high voltage . . . . . Page 1-4
are excellent generators of sound energy . . . . . Page 1-5

[redacted])

From page 1-3

Not so. In fact their ability to operate well at low voltage is another advantage.

Turn to page 1-5.

From page 1-3

Correct. Polarized ceramic transducers are excellent ultrasonic energy generators.

Lithium sulphate transducers, on the other hand, are the most efficient receivers of ultrasonic energy and are intermediate as generators of ultrasonic energy. They do not age and are affected very little by mode conversion interference. Lithium sulphate is, however, very fragile, soluble in water, and limited to use at temperatures below 165° F. Although lithium sulphate is soluble in water, it is used in immersion testing by waterproofing the entire transducer assembly.

Illustrated below is an example of through transmission testing wherein two transducers are used, one a transmitter and one a receiver.

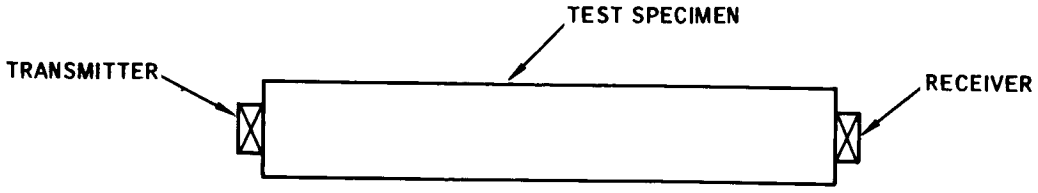

Which of the following transducer combinations would you use in this application?

A lithium sulphate transmitter and a polarized ceramic receiver . . . . . Page 1-6
A polarized ceramic transmitter and a lithium sulphate receiver . . . . . Page 1-7

From page 1-5

You picked the wrong one. It is the polarized ceramic transducers that are the most efficient transmitters and the lithium sulphate that are the best receivers.

Turn to page 1-7.

From page 1-5

Right you are. The ceramic transducers are the most efficient transmitters of sound energy and the lithium sulphate are the best receivers of sound energy, so this would make a fine combination for both contact and immersion testing.

Of interest but of no great significance in this course material is that the natural crystals used in ultrasonic transducers are cut in two ways. X-cut crystals are cut perpendicular to the X axis and produce longitudinal sound waves. The Y-cut crystals are cut perpendicular to the Y axis and produce shear waves. Most natural crystal is X-cut for longitudinal wave propagation because shear waves are usually propagated from longitudinal waves, thru mode conversion, with an angled transducer.

Turn to page 1-8.

From page 1-7

The capability of a transducer, and for that matter the testing system, is for the most part described by two terms - sensitivity and resolution. You will hear these words often in ultrasonic testing.

The sensitivity of a transducer is defined as its ability to detect small discontinuities. Actually it does not detect the discontinuities but detects the sound energy reflections from the discontinuities which, in the A-Scan presentation, are displayed on the CRT screen as vertical deflections (pips) on the sweep line. In ultrasonic testing we are looking for discontinuities in the test specimen and since the pip on the CRT screen, initiated by the transducer, discloses the discontinuity, we can say with reasonable accuracy that the transducer detects the discontinuity.

Is the following statement true or false?

Transducer sensitivity is its ability to detect small discontinuities.

False . . . . . Page 1-9
True . . . . . Page 1-10

From page 1-8

False is the wrong choice. Transducer sensitivity is defined as its ability to detect small discontinuities.

Turn to page 1-10.

[redacted]

From page 1-8

Right. Transducer sensitivity is its ability to detect small discontinuities.

Transducer sensitivity can be measured by the amplitude of its response from an artificial discontinuity in a standard reference block. (More about reference (test) blocks later.) In the A-Scan presentation, the amplitude of the transducer response is indicated by the height of the discontinuity pip on the CRT screen. Precise transducer sensitivity is unique to a specific transducer. Even transducers of the same size, frequency, and material by the same manufacturer do not always produce identical pips on the CRT screen.

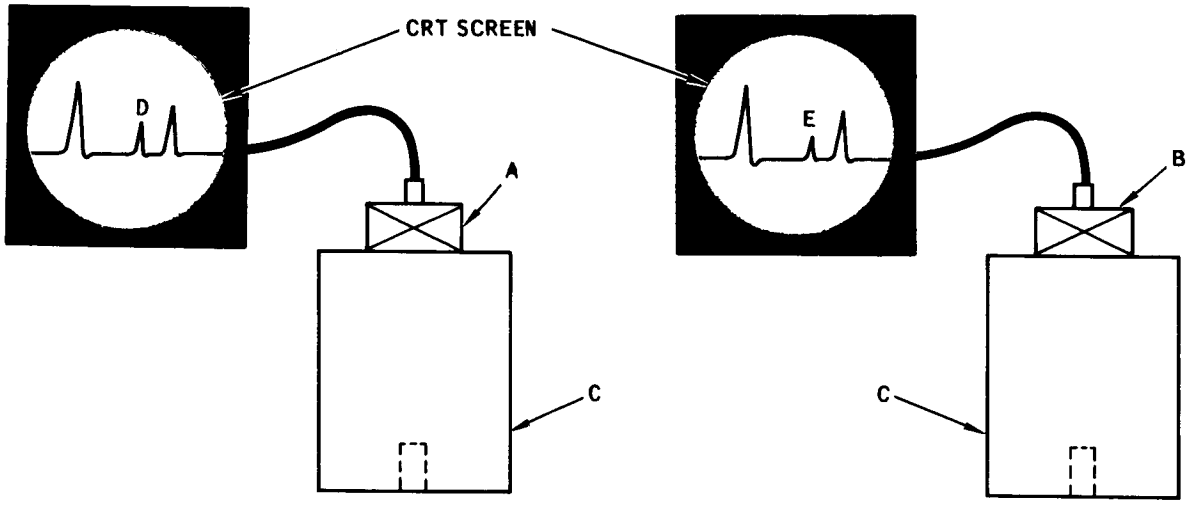

In the illustration above, similar transducers are alternately placed on test block C. Pip D represents the response from transducer A and pip E represents the response from transducer B.

You could say the sensitivity of transducer A is ...

less than that of transducer B. . . . . Page 1-11

greater than than that of transducer B . . . . . Page 1-12

[redacted]

From page 1-10

You chose the wrong answer. Remember we said that in the A-Scan presentation the amplitude of the transducer response is indicated by the height of the discontinuity pip on the CRT screen. In other words, the higher the pip the greater the sensitivity. So, since pip D is higher than pip E, the sensitivity of transducer A is greater than that of transducer B.

Turn to page 1-12.

From page 1-10

Exactly. Pip D is higher than pip E indicating that the amplitude of the response from transducer A is greater than that from transducer B. Since the response is from the same discontinuity the sensitivity of transducer A is greater than that of transducer B.

Transducer sensitivity is rated by its ability to detect a certain size flat-bottom hole, at a specific depth, in a standard reference block. For example the sensitivity of a transducer might be listed as "No. 2 Alcoa." This means that the transducer is capable of detecting a 2/64-inch flat-bottom hole, 3 inches below the surface of an aluminum test block. Or it may simply state how deep a certain size discontinuity can be detected in a given material.

Which of the following statements is true?

Transducer sensitivity is rated by the amplitude of its response to a 2/64-inch flat-bottom hole . . . . . Page 1-13

The sensitivity of a transducer is rated by its ability to detect a certain size flat-bottom hole, at a specific depth, in a standard reference block . . . . . Page 1-14

You selected the statement, "transducer sensitivity is rated by the amplitude of its response to a 2/64 flat-bottom hole". You made the wrong choice.

In ultrasonic testing, requirements do not always demand that a very small discontinuity be detected in the test specimen. It is quite possible that for some uses material with discontinuities up to 8/64 inch would be acceptable. This type of test would require a transducer of only limited sensitivity. For this reason, the rating of transducer sensitivity must be flexible and not limited to its ability to detect any one size discontinuity. The depth in a material at which the discontinuity can be detected is also of primary importance since a transducer capable of detecting a discontinuity 3 inches below the surface might receive no response from the same size discontinuity 6 inches below the surface. The sensitivity of a transducer is rated by its ability to detect a <u>certain size</u> flat-bottom hole, at a <u>specific depth</u>, in a standard reference block.

Turn to page 1-14.

From page 1-12

Precisely. Transducer sensitivity is rated by its ability to detect a certain size flat-bottom hole, at a specific depth, in a standard reference block.

Resolution is the ability of a transducer to separate (distinguish between) the sound reflections from two discontinuities close together in depth or time. In other words, to produce separate distinguishable pips, on the CRT screen, for each discontinuity. For example, in the illustration below transducer A would need greater resolving power than transducer B to detect and effectively display separate sound reflections from each discontinuity.

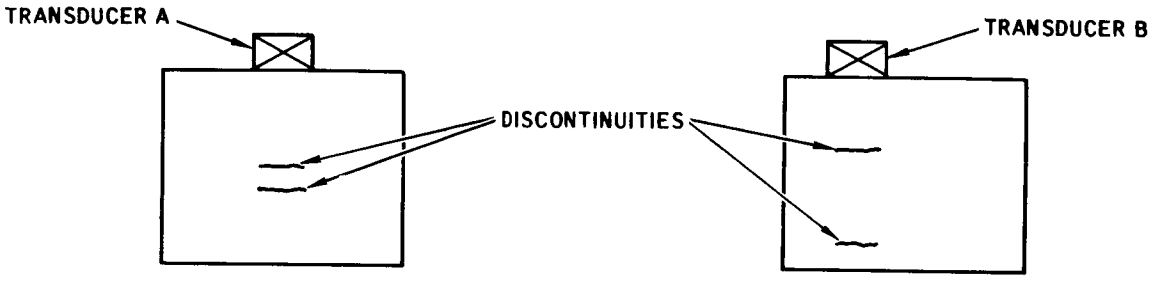

FIG. 1A FIG. 1B

The ability of a transducer to detect a discontinuity close to the surface of a test part is often further qualified as surface resolution.

In the illustration below, which transducer would require the greater resolving power to effectively display the sound reflections from the discontinuity?

Transducer A . . . . . Page 1-15
Transducer B . . . . . Page 1-16

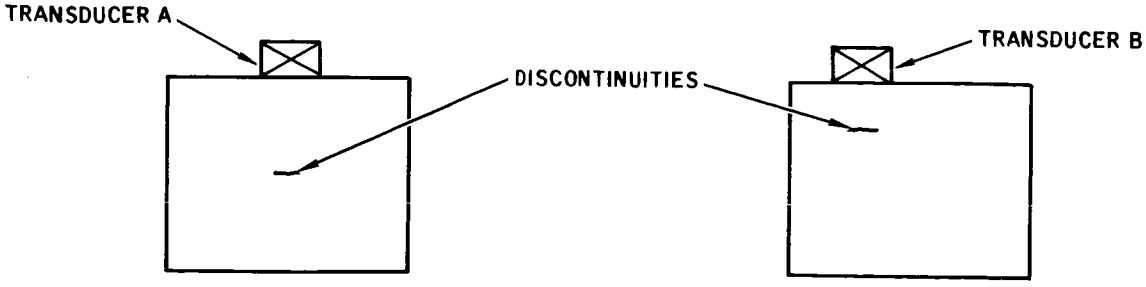

FIG. 2A FIG. 2B

From page 1-14

Wrong choice. Apparently you didn't recognize that the front surface of the part and the discontinuity shown represent the same condition as two discontinuities close together.

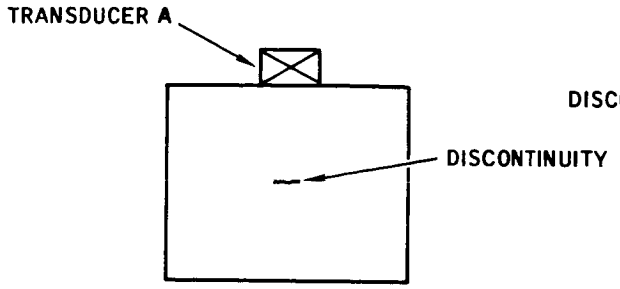

FIG. 2A

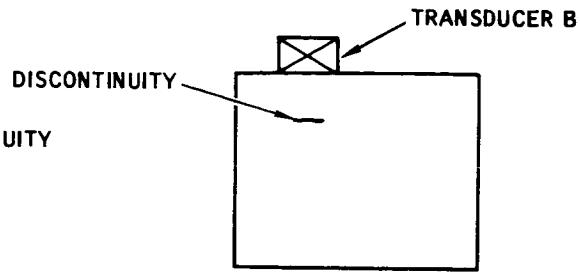

FIG. 2B

Let's take another look here at figures 2A and 2B, keeping in mind that the front surface of the part is a reflecting surface and represented by a pip on the CRT screen. You can now see that, as in figure 1A, on page 1-14, we have two reflecting surfaces close together.

Turn to page 1-16.

[redacted])

From page 1-14

Fine, you recognized that the front surface of the test part is also a reflecting surface and represented by a pip on the CRT screen. So again we have two reflecting surfaces close together and a transducer with greater resolving power would be required.

The resolution or resolving power of a transducer is commonly rated by its ability to detect a certain size flat-bottom hole, a specific distance from the surface of a standard reference block. In other words, the transducer that can detect a discontinuity closest to the test surface has the greatest resolving power.

Which of the following statements describes the resolution of a transducer?

A transducer capable of detecting a 3/64-inch flat-bottom hole, four inches below the front surface of a standard reference block . . . . . Page 1-17

A transducer capable of detecting a 5/64-inch flat-bottom hole, 1/8-inch below the surface of a standard reference block . . . . . Page 1-18

From page 1-16

Sorry, no. The statement you chose describes transducer sensitivity. Resolution is the ability of a transducer to display separate pips on the CRT screen for reflecting surfaces that are close together in depth. A transducer capable of detecting a 5/64-inch flat-bottom hole, 1/8-inch below the surface of a standard reference block does just that. It is able to detect sound reflections from a 5/64-inch hole, only 1/8-inch below the front surface of the test block.

Now turn to page 1-18.

From page 1-16

You made the right choice, so obviously you understand the difference between sensitivity and resolution. The transducer capable of detecting a 5/64-inch flat-bottom hole, 1/8-inch below the surface of a standard test block is capable of detecting discontinuities only 1/8-inch apart in depth.

Best resolution is obtained with high frequencies, short pulse width, and careful damping.

Turn to page 1-19.

From page 1-18

Transducers are made in many sizes and shapes from less than 3/16-inch round to 6-inch wide paint-brush transducers. The many sizes and shapes are a result of much experience and special needs in many applications. Size is a contributing factor in the performance of a transducer. For example, the larger the transducer, the straighter the sound beam (less the beam spread) for a given frequency. However, the narrower beams of the small, high frequency transducers are better able to detect very small discontinuities.

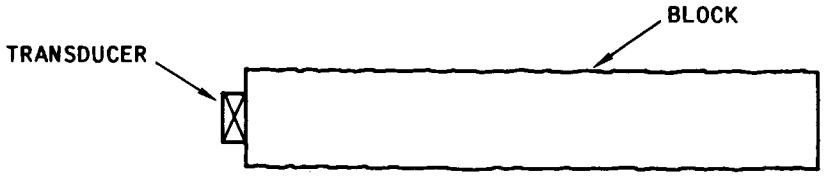

Illustrated above is a 4-inch long, 1-inch square block, all four sides of which are very rough. The ends are parallel and have a smooth finish so it must be checked from the end surface. For best results a transducer with a straight beam is needed to avoid spurious indications from the sides of the block.

One-half inch and three-quarter inch transducers of the same material and frequency are available. Which would you use?

The 1/2-inch transducer . . . . . .Page 1-20
The 3/4-inch transducer . . . . . .Page 1-21

From page 1-19

No, its the other way around. The larger transducer produces the straighter sound beam which would be less likely to return spurious signals from the sides of the block.

Turn to page 1-21.

Right again. At a given frequency the larger transducer would have a straighter beam which would be less likely to strike the sides of the block and cause spurious indications.

Size also affects the amount of sound energy transmitted by the transducer. The larger the transducer the more sound energy it transmits into the test part. When practicable, larger transducers are used to gain deeper sound penetration into a test part.

Sound attenuates (is absorbed) more quickly in some materials than in others so it is necessary to apply more sound energy to some materials in order to reach the back surface and get a back reflection.

If test results indicate that the sound energy is not reaching the back surface of the test specimen you would...

use a smaller transducer . . . . . .Page 1-22
use a larger transducer . . . . . .Page 1-23

From page 1-21

You chose, use a smaller transducer. Well we are afraid that wouldn't help. The smaller transducer would transmit less sound energy into the test part and what is needed is more sound energy to penetrate deeper into the part.

Turn to page 1-23.

Good, the larger the transducer the more sound energy it transmits into the test specimen and more energy is what is needed for the sound to reach the back surface of the test specimen.

As in Volume I, it should be noted again that the term Hertz (Hz) is now the universally accepted designation for the measure of frequency in place of cycles per second (cps). However, to avoid possible confusion by using the newer term, the more common phrase, "cycles per second" (cps), is used in this handbook when referring to the measure of frequency. It should also be noted that megaHertz (mHz) means the same thing as megacycles (mc).

Now to continue our discussion on transducers, large single crystal transducers are generally limited to the lower frequencies because the very thin, high frequency crystals are susceptible to breakage and chipping. For example, a 5-Mc crystal is approximately 0.020-inch thick and a 10-Mc crystal approximately 0.010-inch thick. With other than very rugged materials it is obvious that these crystals are very fragile and the larger they are the more susceptible they are to damage.

Large single crystal transducers are limited to...

high frequency testing . . . . . Page 1-24
low frequency testing . . . . . Page 1-25

From page 1-23

You said, "Large single crystal transducers are limited to high frequency testing". Sorry, you have it reversed. The large single crystal transducers are limited to low frequency testing because they are very thin and fragile, and as you know, a large piece of thin, fragile material is much more difficult to handle without breaking than a small piece of the same material.

Turn to page 1-25.

Correct, large single crystal transducers are limited to low frequency testing because large high frequency crystals are very fragile.

Long, narrow, paint-brush transducers are used to scan wide areas. Paint-brush transducers are made up of a mosaic pattern of small crystals carefully matched so that the intensity of the beam pattern varies very little over the entire length of the transducer. The beam intensity must be consistant in order to maintain uniform sensitivity. Paint-brush transducers make it possible to scan wide areas at higher frequencies. Their purpose is to detect discontinuities in the test part. Smaller, more sensitive transducers are then employed to define the size, shape, orientation and exact location of the discontinuities.

Which of the following is the better reason for testing a large flat plate with a paint-brush transducer?

Its carefully matched crystals produce a sound beam of uniform sensitivity . . . . . Page 1-26

It can scan large areas at high frequencies . . . . . Page 1-27

From page 1-25

Wrong choice. You must have missed the purpose of the paint-brush transducer. Remember we established that large, high frequency, single crystal transducers are very fragile? The paint-brush transducer solves this problem since its individual crystals are smaller and less susceptible to breakage. It is true that the small crystals of paint-brush transducers must be carefully matched to produce a transducer of uniform sensitivity.

Turn to page 1-27.

From page 1-25

Fine. You recognized the need served by the paint-brush transducer; that of scanning wide areas at frequencies higher than are practical with the more fragile large, single crystal transducers.

The frequency of a transducer is a determining factor in its application. Lets take a look at some of the basic characteristics of transducers in relation to frequency.

The higher the frequency of a transducer the straighter the sound beam and the greater the sensitivity and resolution. But, the attenuation is also greatest and thus the penetration is poor.

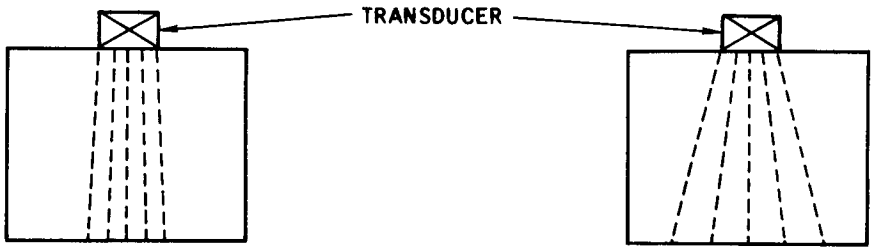

FIG. A FIG. B

In the illustration above which figure represents the transducer with the higher frequency?

Figure A . . . . . Page 1-28
Figure B . . . . . Page 1-31

Right. The beam spread of the transducer in figure A is less than that of the transducer in figure B, so it is the higher frequency transducer.

In the illustration below it can easily be seen that sensitivity (ability to detect small discontinuities) increases as the sound beam becomes straighter. When the sound beam is spread, less sound is likely to be reflected from a small discontinuity.

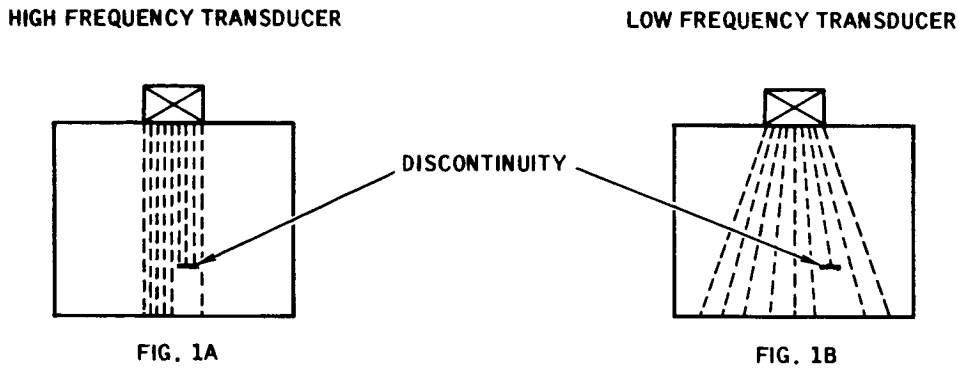

For greater sensitivity, which transducer frequency would you choose?

5 Mc . . . . . .Page 1-29
10 Mc . . . . . .Page 1-30

From page 1-28

5 Mc is incorrect. You must not have followed the connection of frequency, beam spread, and sensitivity. Recall that the higher the frequency of a transducer the straighter the sound beam, or in other words the less the beam spread. Also, the straighter the sound beam (the less the beam spread) the greater the sensitivity as illustrated in figure 1. Note that there is three times as much sound reflection from the discontinuity in figure 1A as in figure 1B. It follows then that the higher the frequency of the transducer the greater the sensitivity.

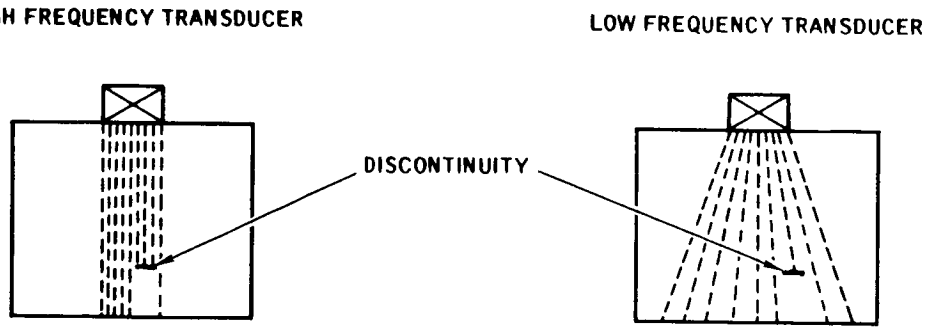

FIG. 1A

FIG. 1B

Turn to page 1-30.

[redacted]

Right - the higher the frequency of the transducer the better the sensitivity.

You have already learned from the previous volume that the higher the frequency of a sound wave, the shorter its wave length ($f = v/\lambda$) and also that the shorter its wave length the more quickly it will attenuate within the test part. It follows then, that the quicker the sound energy attenuates the less depth it will penetrate.

Do you agree with the following statement?

The lower the frequency of a transducer the deeper the sound penetration and the less the attenuation, but the greater the beam spread and the less the sensitivity.

Yes . . . . . .Page 1-32
No . . . . . .Page 1-33

The question was, "which figure represents the transducer with the higher frequency" and you chose figure B. Figure B is incorrect. The figures are repeated below.

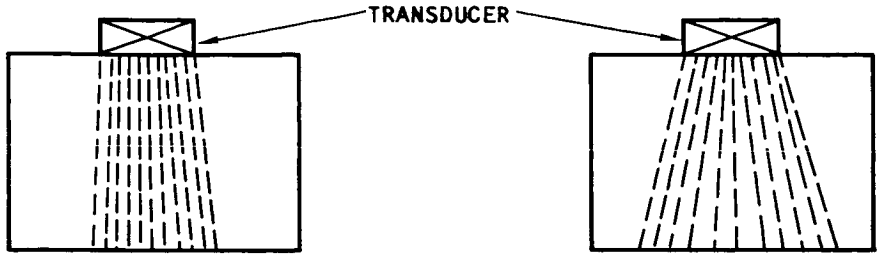

FIG.A FIG.B

Recall we said that the higher the frequency of a transducer the straighter the sound beam (the less the beam spread). Have another look at the figures. Both transducers are the same size but the beam spread from each is quite different. The beam spread from the transducer in figure B is greater so figure A represents the transducer with the higher frequency. The higher the frequency the straighter the sound beam.

Turn to page 1-28.

Glad you agree. You must have recognized that the statement, "the lower the frequency of a transducer the deeper the sound penetration and the less the attenuation, but the greater the beam spread and the less the sensitivity", is really just saying that low frequency transducers have the opposite characteristics from high frequency transducers, which is to be expected.

Crystal thickness is also related to transducer frequency. The higher the frequency of the transducer the thinner the crystal of the transducer will be. Most ultrasonic testing is done between 0.2 Mc and 25 Mc but contact testing is generally limited to 10 Mc because crystals cut for use above 10 Mc are too thin and fragile for practicable contact testing.

If testing conditions required the use of a 15 Mc transducer would you use the contact testing method or the immersion testing method?

Contact method . . . . . Page 1-34

Immersion method . . . . . Page 1-35

From page 1-30

Your answer "no" is incorrect. You probably didn't give it much thought. Look at the statement again carefully, keeping in mind what you just learned about the characteristics of high frequency in transducers. "The lower the frequency of a transducer the deeper the sound penetration and the less the attenuation, but the greater the beam spread and the less the sensitivity."

Turn to page 1-32.

[redacted])

From page 1-32

You said that you would choose the contact testing method if testing conditions required a 15 mc. transducer. Apparently you missed the point about the relationship between the frequency of transducers and their crystal thickness.

The higher the frequency of a transducer the thinner the crystal will be. For example, a 15 mc. transducer has a crystal only about 0.007 inch thick and is far too fragile for practical contact testing. For this reason the immersion testing method would be the better choice when testing conditions required the use of a 15 mc. transducer.

Turn to page 1-35.

Right. You would use the immersion method because the crystal of a 15 Mc transducer would be too thin and fragile for practical use in contact testing.

The transducers used for contact testing and immersion testing are essentially the same but are not interchangeable. Each type is made for its specific purpose. Most contact testing transducers have wear plates in front of the piezoelectric element (crystal) to protect it from wear. The chief exception to this is the quartz transducers that are now used very little in aerospace applications. The immersion type transducer needs no wear plate because it contacts only the water and there is no wear. But they must be waterproofed since they are submerged when in operation. Various frontal members are added to both types of transducers.

Contact transducers are either straight beam transducers or angle beam transducers. The term straight beam means that the sound energy from the transducer is transmitted into the test part normal (perpendicular) to the surface of the test part. Angle beam transducers direct the sound energy into the test part at angles other than 90 degrees (normal) to the surface.

Straight beam and angle beam transducers are illustrated below. Which is the straight beam and which is the angle beam transducer?

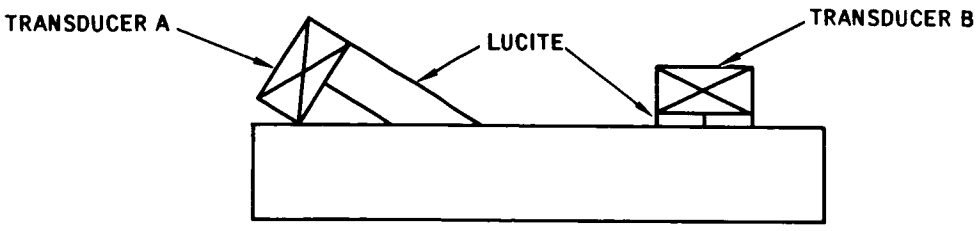

Transducer A = Straight beam

Transducer B = Angle beam . . . . . Page 1-36

Transducer A = Angle beam

Transducer B = Straight beam . . . . . Page 1-37

From page 1-35

You were shown the illustration below and asked to indicate which transducer represents the straight beam transducer and which represents the angle beam transducer. You said that transducer A is the straight beam transducer and transducer B is the angle beam transducer. You have them reversed. Take another look at the illustration.

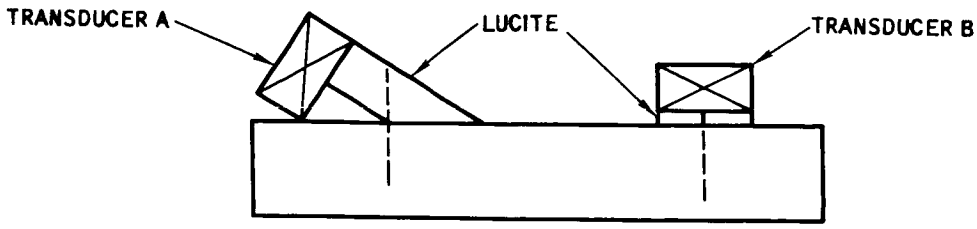

A straight beam transducer is one that directs the sound beam straight into the test specimen, and an angle beam transducer is one that directs the sound beam into the specimen at an angle. Transducer B is the straight beam transducer and transducer A is the angle beam transducer.

Turn to page 1-37.

Right, transducer A is the angle beam transducer and transducer B is the straight beam transducer.

Straight beam transducers usually have lucite or quartz plates (sometimes called shoes) affixed in front of the crystal to protect the crystal and electrodes from wear. Angle transducers are made by making the wear plate wedge-shaped to the desired angle. The sound energy enters the wedge at a 90 degree angle, passes through the wedge, and enters the test part at the incident angle determined by the wedge.

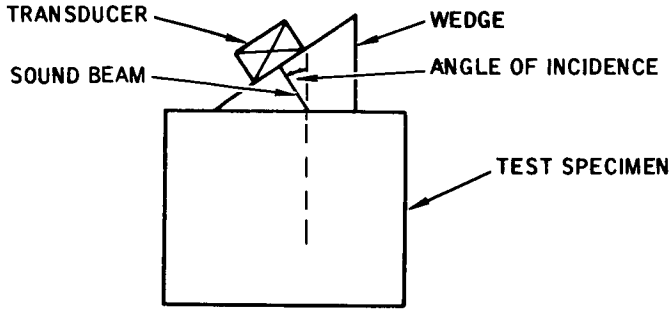

Is the following statement true or false?

The lucite wedge in the illustration protects the face of the crystal and determines the angle of incidence of the sound beam on the test specimen.

True . . . . . Page 1-38

False . . . . . Page 1-39

True is the correct choice. The purpose of the wedge is to control the incident angle of the sound beam but it also protects the crystal.

The disadvantage of the wedge is that some of the sound energy will be lost (attenuated) in the wedge. The amount of sound energy lost in the wedge will depend upon how far the sound must travel through the wedge.

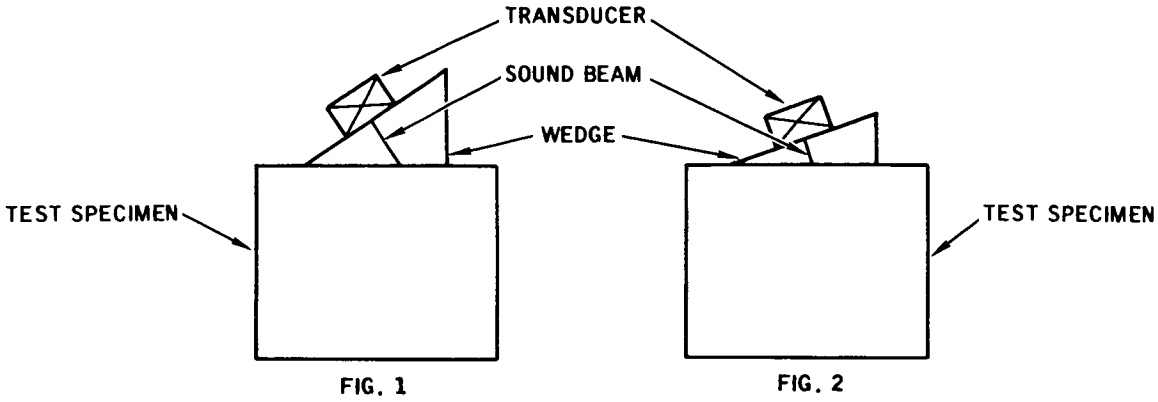

In the illustration above, which configuration would suffer more sound energy loss between the transducer and the test part?

Figure 1 . . . . . Page 1-40

Figure 2 . . . . . Page 1-41

From page 1-37

False is incorrect. A lucite wedge, as shown in the illustration, does determine the angle of incidence of the sound beam on the test part and also protects the transducer crystal.

Turn to page 1-38.

Figure 1 is correct. The sound beam illustrated in figure 1 travels a greater distance through the wedge than the sound beam in figure 2, so more energy will be lost.

The purpose of angle beam transducers is to locate and evaluate discontinuities that lie perpendicular to the test surface or at a considerable angle to the test surface. This is done by directing the sound beam into the test part at an angle, and as you recall from Volume I, sound waves directed into the test part at an angle divide into longitudinal and shear waves by mode conversion. Most angle beam testing is done with shear waves. The figure below illustrates the condition where a straight beam transducer would miss a discontinuity entirely but an angle transducer would return strong indications to the CRT screen.

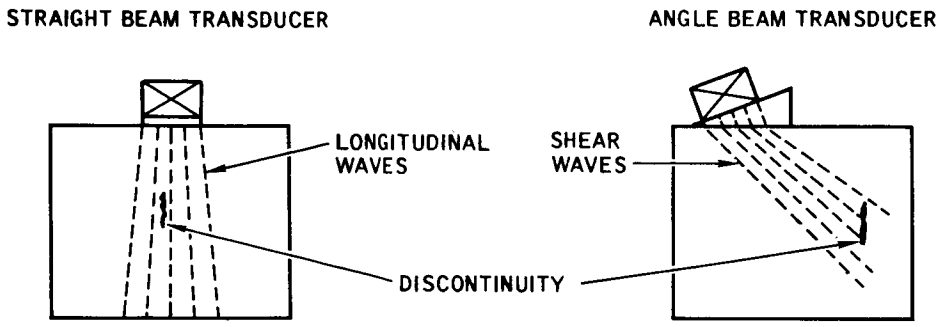

Would you agree that the purpose of angle transducers is also to generate shear waves?

Yes . . . . . Page 1-42

No . . . . . Page 1-43

From page 1-38

Figure 2 is the wrong answer. The sound energy does not travel as far through the wedge in figure 2 as it does in figure 1, so less sound energy would be lost. The farther the sound beam travels in the wedge the more sound energy is lost.

Turn to page 1-40.

From page 1-40

Good. You agree that a primary function of angle beam transducers is to generate shear waves.

In addition to generating shear waves, angle beam contact transducers are also used to generate surface waves. As you know from Volume I, surface waves are generated when the incident angle of the sound beam reaches the second critical angle or shear mode critical angle. At this point the refracted angle of the shear wave is 90 degrees, or in other words, is parallel to the surface of the test material.

A surface wave transducer then is an angle beam transducer that directs sound energy into the test surface at the shear mode critical angle.

Can we also say that a surface wave transducer is an angle beam transducer that generates a shear wave with a refracted angle of 90 degrees?

Yes . . . . . Page 1-44

No . . . . . Page 1-45

From page 1-40

Sorry you don't agree. The propagation of shear waves is a purpose of the angle transducer since most shear wave testing is done with angle beam transducers (or by angulating the transducer in immersion testing). Although at certain small incident angles longitudinal waves are produced by mode conversion, angle transducers that produce longitudinal waves are seldom used. The presence of both shear and longitudinal wave reflections on the CRT screen make interpretation difficult.

Turn to page 1-42.

You are right. Apparently you learned the lessons of Volume I well. A surface wave transducer is an angle beam transducer that generates a shear wave with a refracted angle of 90 degrees which travels along the surface of the test part.

Other types of frontal units are added to contact testing transducers such as those illustrated below. The bottom of the wedge of the angle beam transducer is contoured to fit a certain size pipe or tubing. In this case a shear wave is being introduced into the test part. The curve of the wedge ensures good coupling between the transducer and the test part. The cylindrically curved plate on the straight beam transducer does the same thing. This type of frontal unit is called a curved shoe. Curved shoes are made to match the contours of unusually shaped parts as well as for common radii as illustrated.

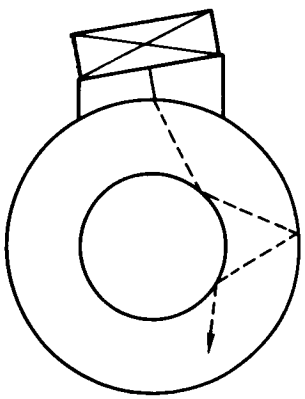

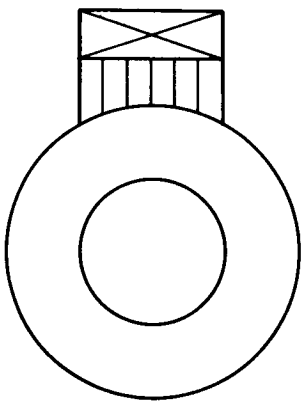

Select the best completion for the following statement.

Devices added to the front of contact transducers to match the curvature of a test part are called ...

curved shoes . . . . . Page 1-46

contour correction lenses . . . . . Page 1-47

From page 1-42

No is the wrong answer. A surface wave transducer is an angle beam transducer that generates a shear wave with a refracted angle of 90 degrees. A refracted angle of 90 degrees means that the direction of propagation of the shear wave will coincide with the surface of the test part. Thus its name, surface wave.

Turn to page 1-44.

Right. Devices attached to the front of transducers that match the curvature of the test part are called curved shoes. Except on long comparatively flat contours, using small transducers it would be impossible to maintain satisfactory coupling between a flat transducer and a curved test part surface.

Angle beam contact transducers are commonly identified by the refracted angle of the shear wave produced, or by the refracted angles of both the longitudinal and shear waves produced, in a given material. Some manufacturers, however, indicate the refracted angles of the shear wave in more than one material. Still other manufacturers identify their angle beam transducers by the incident angle of the sound beam. The manufacturer's method of identification will have to be determined from the manufacturer's literature. In any case, with the information available, the refracted angle of the shear wave produced in any material can be calculated by applying Snell's law.

Select the better statement.

All angle beam transducers are identified by the refracted angle of the shear wave they produce in a given material . . . . . Page 1-48

Angle beam transducers are identified in different ways by different manufacturers . . . . . Page 1-49

From page 1-44

Contour correction lenses is incorrect. The units described are not lenses, but just plates or angles with contours cut in them. Contour correction lenses are used only in immersion testing, more about them later.

Turn to page 1-46.

From page 1-46

Not so. Angle beam transducers are sometimes identified by the refracted angle of the shear wave produced in a given material, but not always. To date there is no standard method of identifying angle beam transducers so this information must be obtained from the manufacturer's literature.

Turn to page 1-49.

Correct. Since no standard method of identifying angle beam transducers has been established to date, this information will have to be obtained from the manufacturer's literature.

Still other types of frontal units are added to immersion testing transducers. Spherically ground and cylindrically ground acoustical lenses are added to immersion type transducers to improve sensitivity and resolution, to compensate for test specimen contours, and to examine a given depth of the test specimen more carefully.

Cylindrically ground lenses focus the sound energy to a line and spherically ground lenses focus the sound energy to a point. The spherically focused lens produces the highest concentration of sound energy but the concentrated energy covers a very small area. The concentration of sound energy is not as great by the cylindrically focused lens but it covers an area the width of the lens.

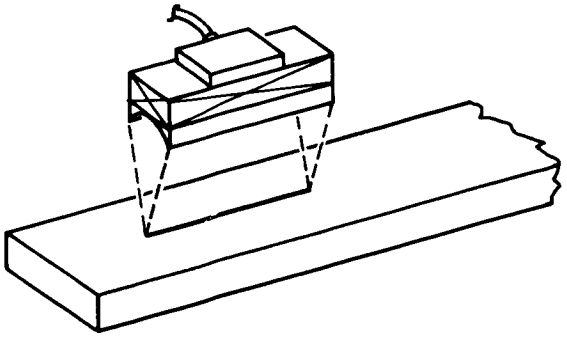

The transducer illustrated above has which type of lens?

Cylindrical lens . . . . . Page 1-50

Spherical lens . . . . . Page 1-51

You are right. The lens illustrated is a cylindrical lens. It focuses the sound energy into a line.

Cylindrical lenses are used in two ways; as contour correction lenses, and to increase the sensitivity and resolution of the equipment. Contour correction lenses are ground specially to direct the sound energy normal (perpendicular) to a curved surface at all points, as shown in view B. Sound so directed will pass through the tubing wall, strike normal to the back surface (inside wall) and be reflected directly back to the transducer along the same path. View A illustrates what will happen to the sound energy if a flat faced transducer is used to make the same test. Much more sound would be reflected from the surface and a great deal more would be attenuated in the tubing wall. Only a comparatively small amount of sound energy would return to the transducer. The difference in CRT screen display is also illustrated.

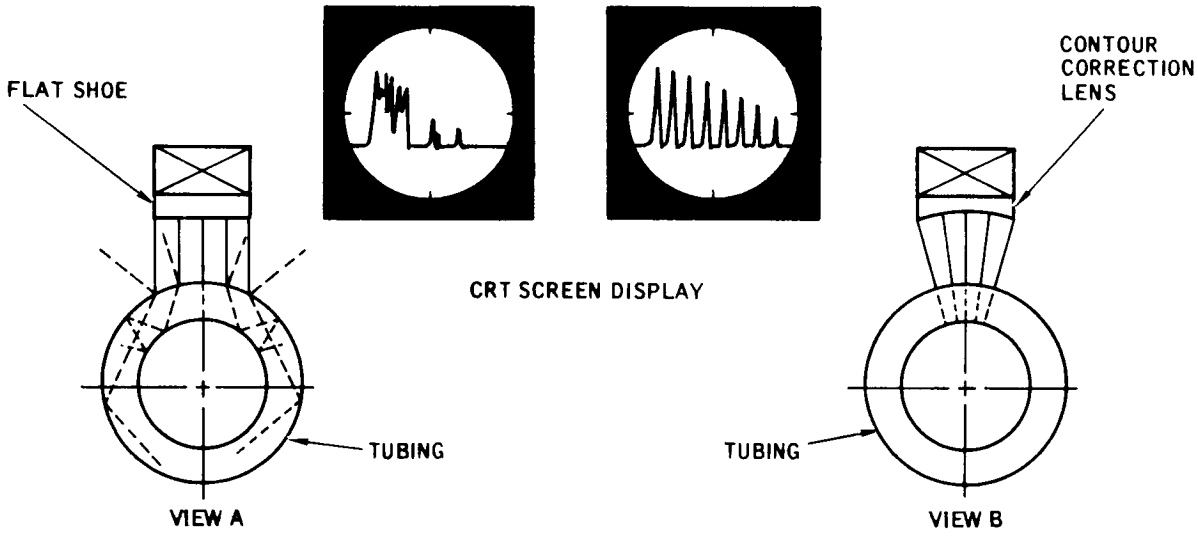

Select the correct statement.

Contour correction lenses are cylindrical lenses specially designed to improve the sensitivity of the test equipment . . . . . Page 1-52

Cylindrical lenses that cause the sound energy from a transducer to strike curved test surfaces normal to the surface at all points are called contour correction lenses . . . . . Page 1-53

From page 1-49

Your choice, spherical lens, is incorrect. The lens illustrated is a cylindrical lens.

It is called a cylindrical lens because it is curved like a lengthwise slice of a cylinder. Like cutting a tin can in half lengthwise as shown in view A.

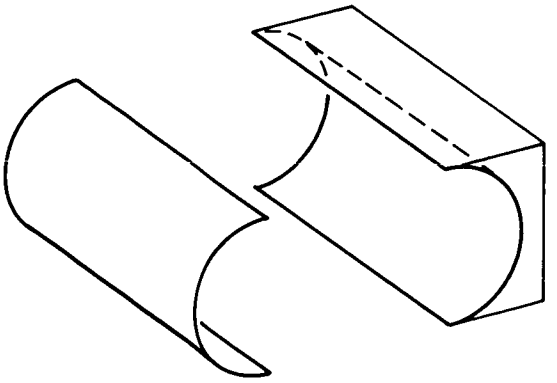

VIEW A

A spherical lens is shaped like a slice off a hollow ball (sphere). See view B.

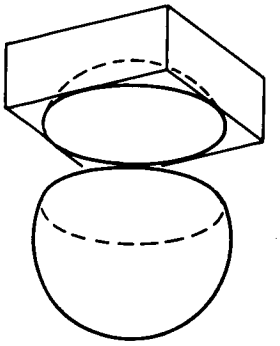

VIEW B

Turn to page 1-50.

From page 1-50

You chose, contour correction lenses are cylindrical lenses specially designed to improve the sensitivity of the test equipment. You have missed the idea slightly. All cylindrical lenses improve the sensitivity of the test equipment by focusing the sound beam but contour correction lenses do it in a special way.

Ordinary cylindrical lenses focus the sound into a line and along this focal line the concentration of sound energy is the greatest and the sensitivity is the greatest. With ordinary cylindrically focused transducers the improvement in test results is derived from the concentration of sound energy at the focal zone.

The contour correction lens also focuses the sound and has a focal line and focal zone but they are not of interest in this special application. Instead the contour correction lens improves the test results by directing the sound normal to the curved test surface at all points. When sound energy strikes normal to a test surface the least amount of sound is reflected and the most possible penetrates the test specimen. Also at normal incidence there will be no refraction as the sound enters the specimen. This straight beam will also strike normal to the back surface and be reflected directly back to the transducer. In other words, the contour correction lens makes it possible to duplicate the ideal testing conditions of a straight beam into a test specimen with parallel front and back surfaces, with a resulting CRT screen display that is easy to interpret.

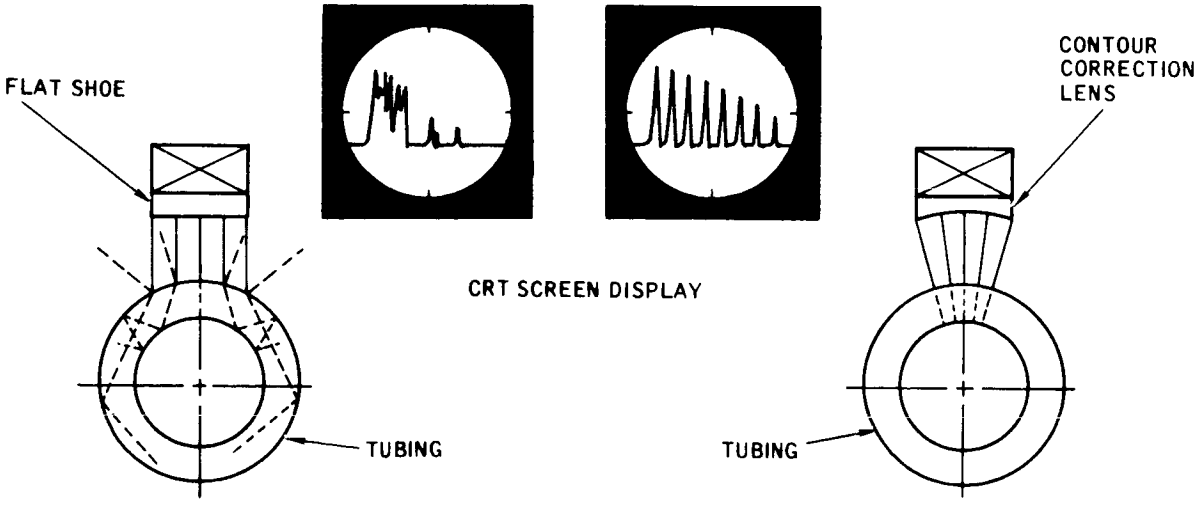

Turn to page 1-53.

Precisely, contour correction lenses are cylindrical lenses that focus the sound energy from the transducer so that the sound strikes the curved test part normal to the surface at all points.

Cylindrical lenses concentrate the sound energy into a wedge shaped beam the width of the transducer. Spherical lenses concentrate the sound energy into a cone shaped, blunt-pointed beam. Focusing the sound beam increases its intensity and moves its point of maximum intensity closer to the transducer, which is also closer to the surface of the test part. Increased intensity means increased sensitivity and moving the point of maximum intensity closer to the test surface improves the surface resolution. Acoustical lenses shorten the usable range of the transducer. As can be seen in the illustration the angle of focus increases sharply, from refraction, when the sound beam enters the test part. Beyond the focal point the sound beam divergence increases rapidly.

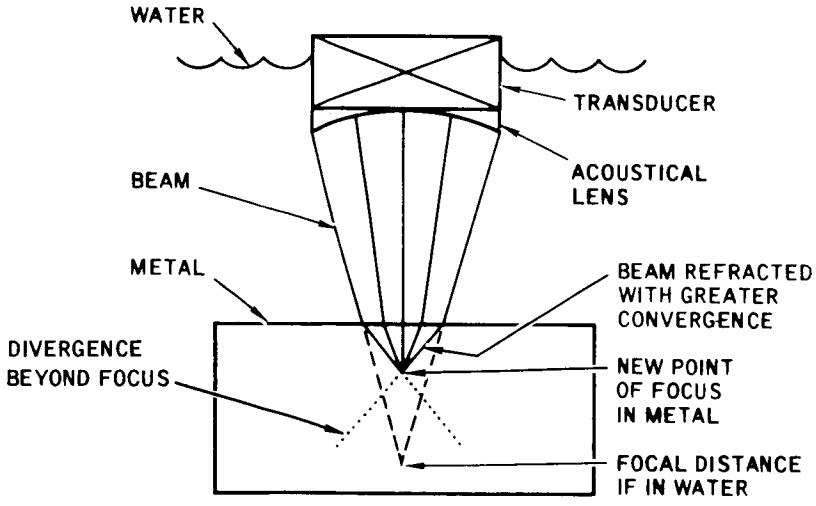

Select the correct statement.

Adding an acoustical lens to a transducer increases its sensitivity and resolution . . . . . Page 1-54

Adding a spherical lens to a transducer increases its usable range . . . Page 1-55

Your choice is correct. Adding an acoustic lens to a transducer does increase its sensitivity and resolution, but in a limited area.

Spherical lenses make the greatest improvement in sensitivity and resolution but the area covered by their concentrated beams is quite small. The cylindrical lenses do not improve the sensitivity and resolution to the same degree as the spherical lenses but they have the improved capability across their full width.

Which lens increases transducer sensitivity more?

Spherical lens . . . . . Page 1-56

Cylindrical lens . . . . . Page 1-57

[redacted]

No, it's just the opposite. This is the disadvantage of acoustical lenses. Adding a spherical lens or a cylindrical lens to a transducer shortens its usable range. The usable range is shortened because once the sound beam passes beyond the focal point, it diverges (spreads) very rapidly. Note beam divergence in illustration below.

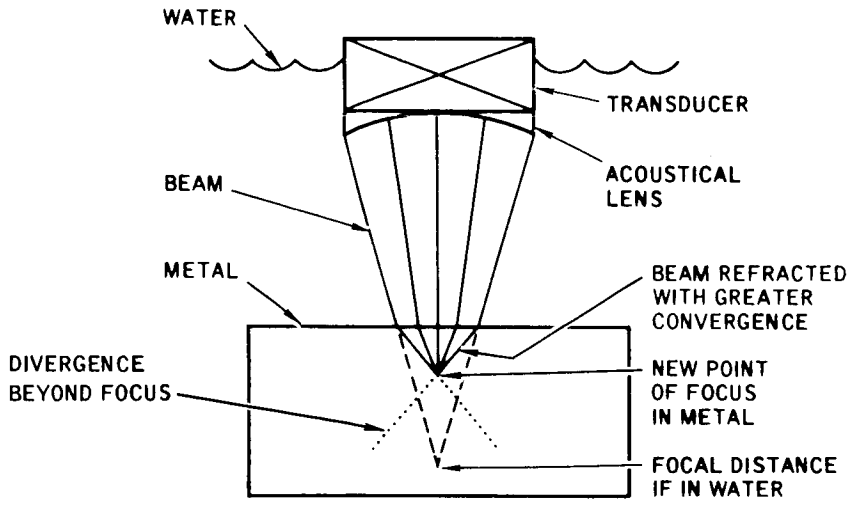

Turn to page 1-54.

Right. The spherical lens concentrates the sound beam into a blunt point of greatly increased intensity and the sensitivity increases proportionately in the focal zone.

The disturbing effects of rough surfaces and metal noise can often be reduced by concentrating the sound energy into a smaller beam. This is true simply because a smaller area is being looked at. In a smaller area the true discontinuity pip will be relatively large compared to the combined noise of the other irrelevant indications.

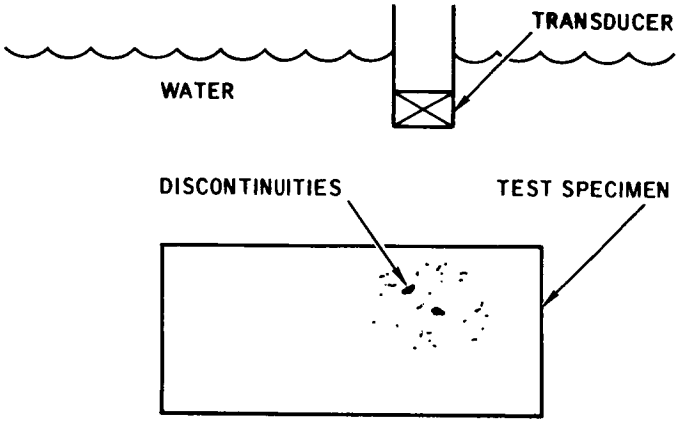

In the illustration above two small discontinuities are located in an area of irrelevant porosity, close to the surface. Which type of transducer would be more likely to pinpoint these discontinuities?

A small high frequency transducer . . . . . Page 1-58

A spherically focused transducer . . . . . Page 1-59

From page 1-54

You said that a cylindrical lens increases the sensitivity of a transducer more than a spherical lens. Not so, you have it reversed. The spherical lens increases the sensitivity of the transducer more than the cylindrical lens.

The increase in sensitivity in both cases is the result of the lens concentrating (focusing) the sound into a smaller area. The cylindrical lens concentrates the sound into a line the width of the transducer; but the spherical lens concentrates the same amount of sound into a single point, a much smaller area than the cylindrical lens, and therefore increases the sensitivity more.

Turn to page 1-56.

From page 1-56

Not the best choice. A small, high-frequency transducer might do the job but chances are it would have a difficult time distinguishing between pips resulting from reflections from the discontinuities and pips of equal amplitude resulting from simultaneous reflections from several tiny porosity holes.

Turn to page 1-59.

A good choice. A spherically focused transducer would be better able to pick out the true discontinuities from the multiple reflections of the irrelevant porosity holes. The concentrated beam would strike fewer irrelevant discontinuities at one time, thereby reducing the amplitude of the pips caused by simultaneous reflections from the irrelevant discontinuities, but still produce strong reflections from the true discontinuities.

Focused transducers are described by their focal length - short, medium, long or extra long. Short focal lengths are for examining areas of the test part close to the surface. The medium, long and extra long focal lengths are for increasingly deeper areas. Focused transducers are frequently specially designed for a specific job. View A describes some terms associated with focused transducers.

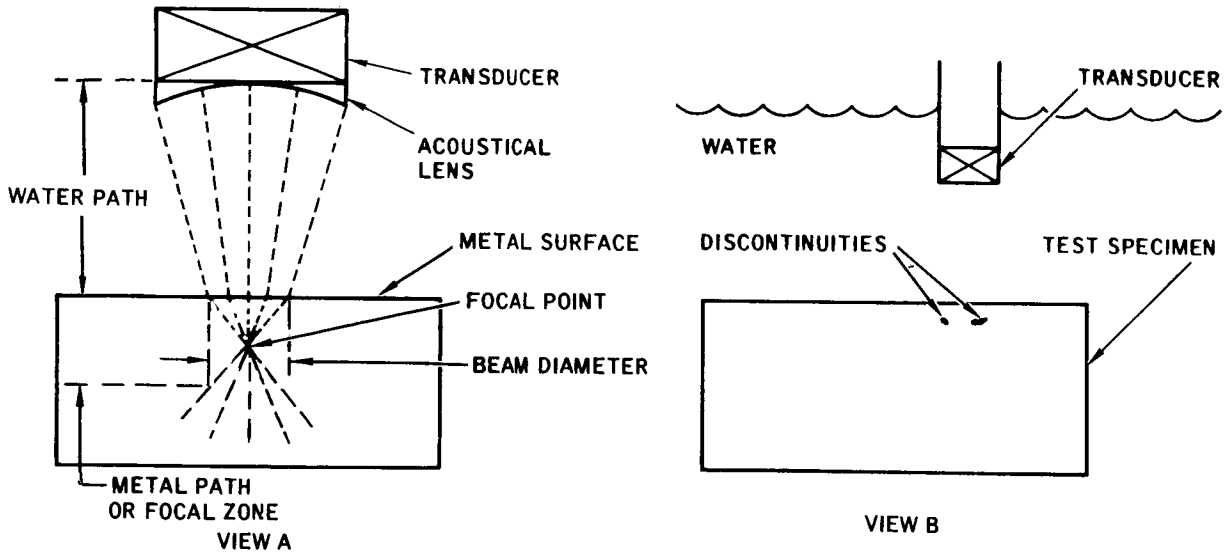

In view B above several small discontinuities are located close to the surface of the test part. Which type of focused transducer would be best for locating them?

Long focal length . . . . . Page 1-60

Short focal length . . . . . Page 1-61

From page 1-59

Long focal length is the wrong answer. The longer the focal length of the transducer the deeper into the test part the concentrated point of high sensitivity will be. To locate discontinuities close to the surface we need a short focal length transducer.

Consider the illustration below. A straight beam transducer, a long focal length transducer and a short focal length transducer are shown. It is apparent that the short focus transducer will have the greatest sensitivity (sound intensity) close to the surface.

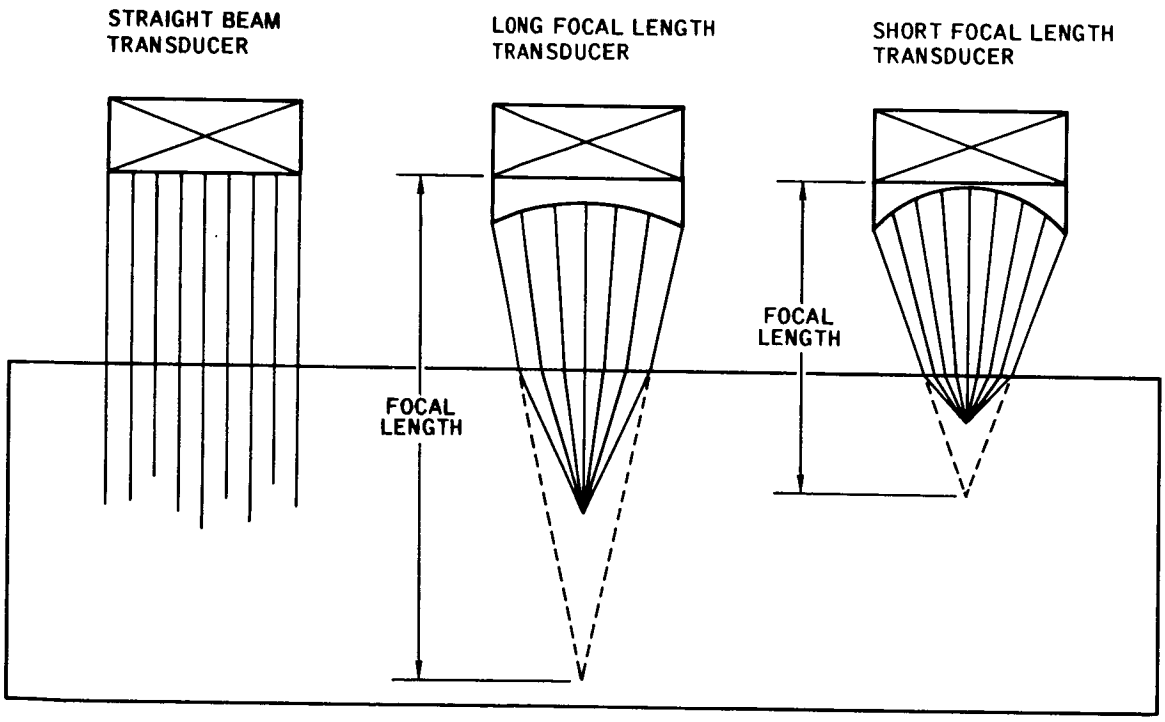

The focusing that occurs at the surface of the test part is caused by refraction as the sound enters the test part.

Turn to page 1-61.

You are right. Short focal length transducers have excellent near surface resolution.

Collimators are another device used to regulate the transducer sound beam. A collimator added to the front of a transducer reduces the beam spread and produces a smaller and straighter sound beam. Collimators are used primarily with small, high-frequency transducers to reduce their undesirable beam spread but maintain their sensitivity. The resulting smaller and straighter sound beam is better able to evaluate the size and location of discontinuities. Collimators are made from materials that absorb the spreading sound energy. In effect the collimator trims off the outer weaker portion of the sound beam and leaves the center portion where the beam intensity is the greatest.

Choose the statement that best describes the function of a collimator.

A collimator added to a transducer concentrates the sound beam into a straight path and increases the beam intensity . . . . . Page 1-62

Collimators are added to transducers to reduce the beam spread and improve the directivity of the sound beam . . . . . Page 1-63

From page 1-61

You chose, a collimator added to a transducer concentrates the sound beam into a straight path and increases the beam sensitivity. This is not quite true. The collimator eliminates most of the low intensity portion of the sound beam and leaves the high intensity portion but it does not increase the intensity of the beam.

Turn to page 1-63.

Right again. Collimators do reduce the beam spread and improve the directivity of the sound beam. Sensitivity and resolution are also improved because only the high intensity portion of the sound beam is being used. The area being examined at any one time, however, will be reduced.

The immersion principle of testing, that of projecting the sound beam through a liquid path into the test part, can be applied without immersing the test part, by using the water column (more commonly known as the bubbler or squirter) technique. Views A and B below illustrate both straight beam and angle beam testing by the water column technique. When in use the transducer is surrounded by and coupled to the test part by a flowing column of water.

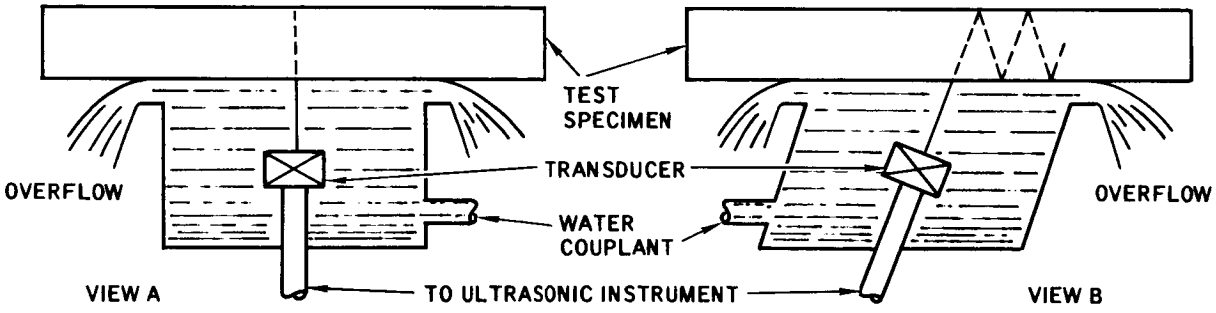

In view C a transducer is mounted on a stationary axle inside a liquid filled tire and the tire is in contact with the test part. Would you say this is an example of contact testing or immersion testing?

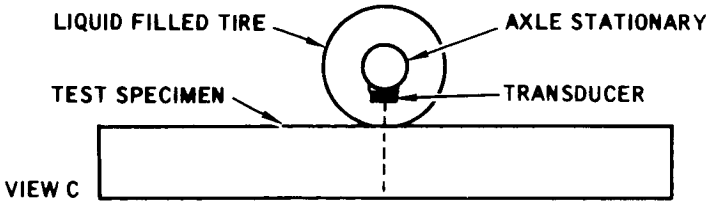

Contact testing . . . . . Page 1-64

Immersion testing . . . . . Page 1-65

You said that the illustration is an example of contact testing. Your answer is incorrect. It is another example of immersion testing without immersing the test specimen. Let's take another look at the illustration and review the definitions of contact and immersion testing.

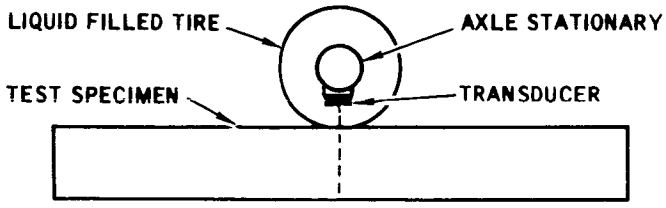

In contact testing the transducer is in contact with the test specimen with only a thin couplant between to insure efficient sound transmission. In the illustration the transducer is separated from the test specimen by a quantity of liquid and the tire.

In immersion testing the sound beam is projected through a liquid path to the test specimen. The liquid is the couplant. That is what we have in the illustration of the wheel transducer. The sound beam is projected through the liquid in the tire to the test specimen.

Turn to page 1-65.

Fine - you recognized the wheel transducer technique as an application of the immersion principle. The sound is projected through a column of water to the test part. It might well be thought of as a dry immersion technique, however, a fine mist spray is frequently applied between the tire and the test part to ensure satisfactory coupling.

The wheel transducer is readily adaptable to both pulse-echo and through transmission testing so has found wide usage in both standard and special applications. A wide selection of angular settings fore and aft, and sideways are also possible with the wheel type transducer. The following illustrations further describe the angular capabilities of the wheel type transducer.

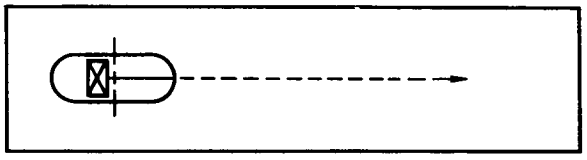

SOUND BEAM DIRECTED IN FORWARD DIRECTION

SOUND BEAM DIRECTED TO THE SIDE 90°

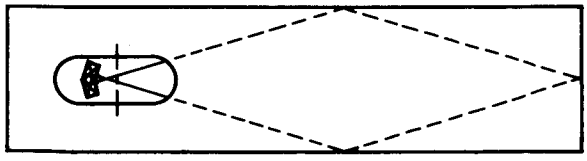

SOUND BEAM ANGLED TO THE SIDE AND FORWARD

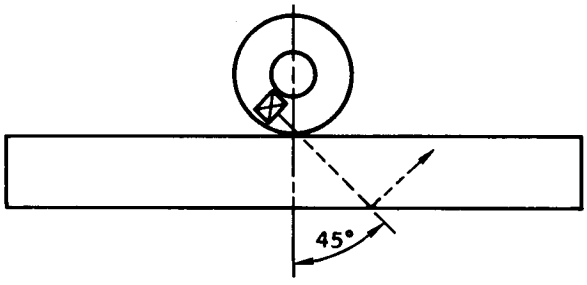

SOUND PROPAGATED INTO MATERIAL AT 45° ANGLE

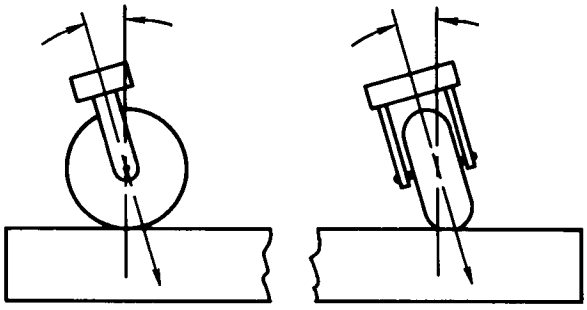

ANGLE OF PROPAGATION MAY BE VARIED BY ADJUSTING POSITION OF WHEEL MOUNTING YOKE

Choose the correct statement.

Wheel type transducers are limited to through transmission testing . . . . . Page 1-66

Wheel type transducers are used in through transmission testing and pulse-echo testing . . . . . Page 1-67

From page 1-65

Wrong choice. Wheel type transducers are used in both pulse-echo and through transmission testing. The wheel arrangement is simply a convenient mounting for the transducer and in no way limits the testing method.

Turn to page 1-67.

Correct. Wheel type transducers are used in both pulse-echo and through transmission testing. Wheel type transducers are mounted on either mobile or stationary fixtures. If the wheel is mounted on a stationary fixture the test material moves past it. The mobile mounted wheel units run over the test material.

Up to now we have treated transducers in the singular except for a brief mention of through transmission testing. Actually there are single ultrasonic transducers and double ultrasonic transducers. The single transducers may be transmitters only, receivers only, or both transmitter and receiver. Double transducers are in essence two single transducers mounted side by side for straight beam testing, or stacked for angle beam testing. In both cases one is a transmitter and the other is a receiver and they are separated by a sound barrier.

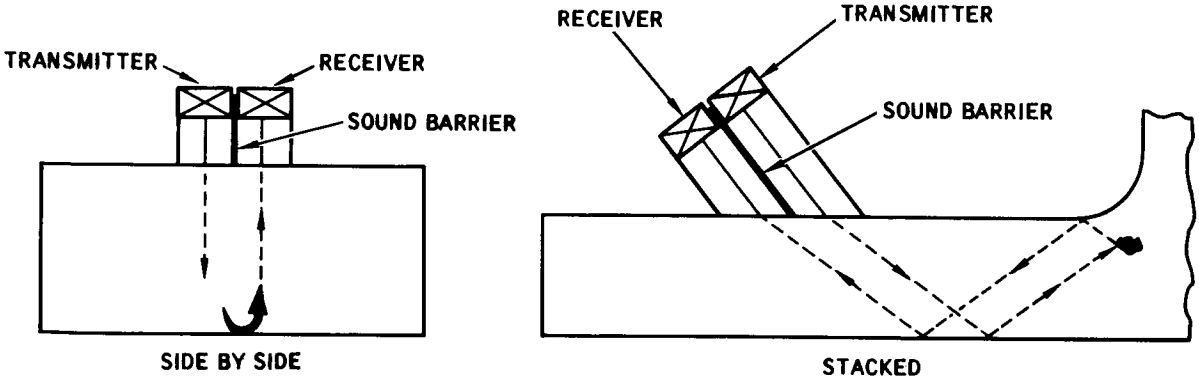

DOUBLE TRANSDUCERS

Do you agree with the following statement?

Single transducers are either transmitters only or receivers only and double transducers are one transmitter and one receiver.

Yes . . . . . Page 1-68

No . . . . . Page 1-69

From page 1-67

Yes is the wrong answer. Single transducers can also be both transmitter and receiver. In fact a large percentage of pulse-echo testing is done with single transducers that are both transmitter and receiver.

Turn to page 1-69.

Am glad you don't agree, because single transducers can also be both transmitter and receiver.

The terms "double transducer" and "double transducer testing" can cause confusion; they are not necessarily the same. Double transducer testing may be done either with a double transducer or with two single transducers, one a transmitter and one a receiver, at separate locations on the test part. In either case the advantage of double transducer testing is that surface resolution is improved by reducing the dead zone. This advantage results because the receiver separated from the transmitter can receive discontinuity signals before the transmitter completes its transmission.

Choose the correct statement.

Double transducers have better surface resolution because the dead zone is shorter . . . . . Page 1-70

Double transducers have better surface resolution because they have more power . . . . . Page 1-71

[redacted])

From page 1-69

Right. Double transducers have better surface resolution because the dead zone is shorter; and the dead zone is shorter because there is no acoustical interference between the transmitter and the receiver.

Turn to page 1-72 for a review.

From page 1-69

You chose the statement, "double transducers have better surface resolution because they have more power." You made the wrong choice. The power or strength of the pulse is controlled by the generator/indicator instrument, not by the transducer. A large transducer transmits more sound energy into a specimen than a small one but the term "double Transducer" in no way reflects the size of the transducer. Double transducers have better surface resolution because the dead zone immediately in front of the transducer is practically nonexistant.

Turn to page 1-70.

From page 1-71

1. The next few pages are different from the ones which you have been reading. There are _____ arrows on this entire page. (Write in the correct number of arrows.) Do not read the frames below. FOLLOW THE ARROW and turn to the TOP of the next page. There you will find the correct word for the blank line above.

12. surface

13. A transducer capable of detecting a 3/64-inch flat-bottom hole, 1/16-inch below the surface of a test part has (excellent, good, poor)_____resolving power.

24. thinner

25. Contact testing is generally limited to low frequencies because crystals cut for use above 10 Mc are too th_____ and fr_____for practical contact testing.

36. sensitivity, resolution, range

37. Spherical lenses make the greatest improvement in sensitivity and resolution but the a_____ covered by the concentrated beam is very small.

This is the answer to the blank in Frame number 1.

1. four Frame 2 is next

2. These sections will provide a review of the material you have covered to this point. There will be one or more blanks in each f_____.

13. excellent

14. The beam spread of transducers of the same material and frequency is related to their size. The larger the transducer the (more, less)_____the beam spread.

25. thin, fragile

26. A straight beam transducer is one that transmits the sound energy into the test part _____ to the surface of the test part.

37. area

38. The confusing indications from a rough surface or metal noise can frequently be reduced by the use of a _____ focused lens.

2. frame

3. By following the arrows or instructions you will be directed to the section which follows in sequence. Each section presents information and requires the filling in of _____.

14. less

15. The size of a transducer and the amount of sound energy it transmits are also related. The larger the transducer the (more, less) _____ sound energy it transmits into the test part.

26. normal (perpendicular or at 90°)

27. Contact angle beam transducers transmit the sound energy into the test part at angles other than normal by shaping the wear plate in the form of a we_____.

38. spherically

39. A (short, long) _____ focal length transducer has the best surface resolution.

3. blanks (or spaces or words)

4. Now for the review: In the past, quartz was used almost exclusively in ultrasonic transducers until recent developments in polarized cer_____ and li_____ sul_____ .

15. more

16. Large single crystal transducers are generally limited to (high, low) _____ frequency testing.

27. wedge

28. In contact angle beam testing some sound energy is l_____ in the wedge.

39. short

40. Collimators are added to transducers to reduce b_____ s_____ and improve the directivity of the sound beam.

4. ceramics,
lithium sulphate

5. The polarized ceramic transducers are the best t_____ of ultrasonic energy.

16. low

17. Long, narrow transducers made up of a mosaic pattern of small crystals carefully matched to produce a sound beam of uniform intensity are called p_____ -b_____ transducers.

28. lost (attenuated)

29. The purpose of angle beam transducers is to locate and evaluate discontinuities that lie p_____ to the surface of the test part.

40. beam spread

41. The technique of immersion testing that employs a flowing stream of water between the transducer and the test part, but does not require that the test part be immersed, is called the w_____ c_____ technique.

5. transmitters

6. Lithium sulphate transducers are the best re_____ of ultrasonic energy.

17. paint-brush

18. Paint-brush transducers are used for scanning w_____ areas.

29. perpendicular

30. Angle beam transducers are also used to generate s_____ waves by mode conversion.

41. water column
(bubbler or squirter)

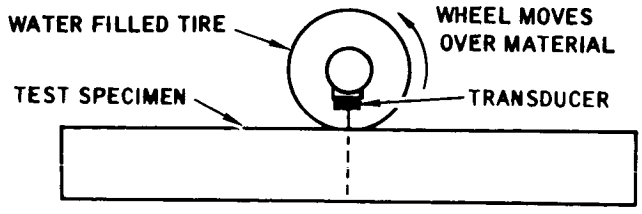

42. The accompanying illustration is an example of (contact, immersion) _____ testing.

6. receivers

7. In a two transducer testing system the best combination would be a _____ _____ transmitter and a _____ _____ receiver.

18. wide

19. The frequency of a transducer is a determining factor of its capability. The higher the frequency of a transducer the (less, more) _____ the beam spread.

30. shear

31. An angle beam transducer that generates a shear wave with a refracted angle of 90 degrees is also called a sur_____ wave transducer.

42. immersion

43. The wheel type transducer is equally adaptable to p_____ -e_____ and t_____ -t_____ testing.

7. polarized ceramic
lithium sulphate

8. The capability of a transducer is described by its sensitivity and resolution. Transducer sensitivity is its ability to detect sm _____ dis _____.

19. less

20. Also, the higher the frequency of a transducer the (greater, less) _____ the sensitivity and resolution.

31. surface

32. Devices (usually lucite) added to the front of contact transducers to match the curvature of a test part are called cur _____ sh _____ .

43. pulse-echo,
through-transmission

44. Single transducers may be t _____ only, r _____ only, or both t _____ and r _____ .

8. small discontinuities

9. Transducer sensitivity is measured by the amp_____ of its response, as displayed on the CRT screen, from an artificial discontinuity in a standard reference block.

20. greater

21. Increasing the sound beam frequency also (increases, decreases) _____ attenuation.

32. curved shoes

33. These curved shoes ensure good co_____ between the transducer and the test part.

44. transmitter, receiver, transmitter, receiver

45. Two single transducers, one a transmitter and the other a receiver, mounted in a common case but separated by a sound barrier is called a d_____ transducer.

9. amplitude (height)

10. Transducer sensitivity is rated by its ability to detect a certain size flat-bottom hole, at a specific d_____, in a standard reference block.

21. increases

22. To increase the depth of penetration of the sound beam in the test material, the frequency should be (increased, decreased) _____.

33. coupling

34. Contact angle beam transducers are generally identified by the ref_____ angle of the s_____ wave generated.

45. double

46. Double transducer testing is done either with two s_____ transducers or one d_____ transducer.

10. depth

11. Transducer resolution is its ability to produce separate pips on the CRT screen for discontinuities cl_____ tog_____ in d_____.

22. decreased

23. The lower the frequency of a transducer the less the sound energy attenuates and the deeper the sound energy will penetrate the part. At the same time, the sensitivity will (increase, decrease) _____ and the beam spread will (increase, decrease) _____.

34. refracted, shear

35. Cylindrical lenses on transducers that cause the sound energy to strike curved test surfaces normal to the surface at all points are called con_____ cor_____ lenses.

46. single, double

47. Double transducer testing has better s_____ resolution because the d_____ zone is shorter.

11. close together, depth

12. Transducer resolution is rated by its ability to detect a certain size flat-bottom hole a specific distance from the su_____ of a standard reference block.

Return to page 1-72, frame 13.

23. decrease, increase

24. Transducer frequency and crystal thickness are also related. The higher the frequency the thi_____er the crystal.

Return to page 1-72, frame 25.

35. contour correction

36. Adding acoustical lenses to transducers increase their se_____ and res_____ but shortens their ra_____.

Return to page 1-72, frame 37.

47. surface, dead

48. Turn to page 2-1.

In ultrasonic testing the couplant, as the name implies, couples the transducer to the test surface. The primary purpose of the couplant is to provide a suitable sound path between the transducer and the test surface. As you know from Volume I, air has a very low acoustic impedance and is a very poor conductor of sound energy. The foremost task of the couplant is to exclude all air from between the transducer and the test surface. The couplant also fills in and smooths out irregularities of the test part surface and in contact testing aids the movement of the transducer across the test surface. The couplant can be any of a vast variety of liquids, semi-liquids, pastes, and even some solids.

Which of the following is the reason for using a couplant between the transducer and the test surface in ultrasonic testing?

Ultrasonic vibrations (sound energy) do not travel readily through air . . . . Page 2-2

A lubricant is required between the transducer and the test specimen to minimize crystal wear . . . . . Page 2-3

From page 2-1

Right. A couplant is needed because sound energy does not travel readily in air. Where there is an air gap between the transducer and the test part surface the sound energy will not enter the test specimen. The greatest disadvantage of contact testing is the difficulty in maintaining uniform acoustic coupling.

Although the couplant may be one of a great variety of materials, it must satisfy certain requirements. A couplant must effectually wet or totally contact both the surface of the test specimen and the face of the transducer so that all air is excluded from between the surfaces. A wetting agent is usually added to the couplant material to ensure good adhesion. The couplant material must also be homogenous and free of solid particles or air bubbles.

Select the correct statement.

The couplant must thoroughly wet the face of the transducer and the surface of the test specimen to ensure a good electrical ground . . . . . Page 2-4

The couplant must thoroughly wet the face of the transducer and the surface of the test specimen to ensure good sound coupling . . . . . Page 2-5

From page 2-1

In contact testing the couplant does provide lubrication between the transducer and the test specimen but the lubrication is a fringe benefit. The purpose of the couplant is to exclude all air from between the transducer and the test specimen surface because air is a very poor conductor of sound energy. When there is an air gap between the transducer and the test surface the sound energy is reflected back to the transducer, because of the high acoustic impedence ratio between the transducer crystal and the air, and no sound will enter the test specimen.

Turn to page 2-2.

[redacted])

From page 2-2

Sorry, that was the wrong choice. The couplant must thoroughly wet the face of the transducer and the surface of the test part to ensure good sound coupling. Thorough wetting ensures the exclusion of all air from both surfaces.

Turn to page 2-5.

Right again, thoroughly wetting the face of the transducer and the surface of the test specimen ensures that all air will be excluded from both surfaces.

A practical couplant must be easy to apply and easy to remove but have a tendency to stay on the surface. It must also be harmless to the test surface and the transducer.

Considering these requirements, do you think plain water or plain oil would be a better couplant in contact testing of metals?

Water . . . . . Page 2-6
Oil . . . . . Page 2-7

From page 2-5

You chose the wrong one. Plain water does not make a very good couplant in contact testing because it runs off the surface too readily, especially if the test specimen is not perfectly flat. Plain oil would be the better choice because it would stay on the surface and still be relatively easy to apply and remove.

Turn to page 2-7

From page 2-5

Yes, plain oil would be better because it would not run off the surface as readily and still be easy to apply and remove. In practice the oil would have a wetting agent and a corrosion inhibitor added. Although water alone is just a fair couplant, a mixture of one part glycerine and two parts water with a wetting agent and a corrosion inhibitor added is often used on relatively smooth surfaces and is an excellent couplant.

In contact testing the choice of couplant will depend a great deal upon the condition of the test surfaces to be contacted by the transducer. The water/glycerine mixture or a very thin oil are fine for relatively smooth test surfaces. For slightly rough surfaces medium weight oils are used. Heavier oil and grease are used on rough or vertical surfaces. Specially formulated liquid and paste couplants are marketed by manufacturers of ultrasonic testing equipment. The temperature and composition of the material to be tested must also be considered when choosing a couplant. In circumstances where the use of liquid or paste type couplants is undesirable, thin rubber or rubber-like materials are used.

Which of the following is the determining factor in selecting a couplant?

Size and frequency of the transducer . . . . . Page 2-8
Condition of the test surface . . . . . Page 2-9

From page 2-7

No, you made the wrong choice that time. The size and frequency of the transducer have nothing to do with determining the type of couplant to use for a given test.

The condition of the test surface is a determining factor in selecting a couplant. Different degrees of surface roughness will require couplants of different consistencies. The temperature of the test surface must also be considered.

Turn to page 2-9.

From page 2-7

Your choice of, condition of the test surface is a determining factor in selecting a couplant, is correct. Generally speaking the rougher the test surface the more viscous the couplant should be.

In all cases the film of couplant should be as thin as possible and still provide uniform coupling of sound energy between the transducer and the test surface; and the thickness of the couplant must not vary appreciably. If the couplant is too thick, sound energy is lost by attenuation and interference. If the thickness of the couplant varies appreciably, the couplant acts like a wedge and alters the direction of the sound beam which will result in confusing indications on the CRT screen.

Select the correct statement.

In contact testing the couplant must be applied carefully to ensure good sound energy transfer into the test specimen . . . . . Page 2-10

In contact testing, if the correct couplant is used, application is no problem provided plenty of couplant is used . . . . . Page 2-11

From page 2-9

Right. The couplant must be carefully applied to ensure good sound energy transfer into the test specimen. In ultrasonic testing the couplant is a most important link.

The couplant also serves as an acoustic impedance matching media. A couplant should have an acoustic impedance between that of the transducer face and the test surface, preferably approaching that of the test material. If the acoustic impedance of the couplant is other than between those of the transducer and the test surface, unnecessary loss of sound energy will occur.

Select the correct statement.

The acoustic impedance of a couplant should be greater than the acoustic impedance of the test specimen . . . . . Page 2-12

The acoustic impedance of a couplant should be between the acoustic impedance of the transducer and that of the test specimen . . . . . Page 2-13

From page 2-9

No, plenty of the right couplant will not necessarily do the job. When relatively smooth surfaces, which require only a very thin couplant, are being tested, using plenty of couplant might ensure good coupling but when greases, pastes or solids are used it is most important that the layer of couplant be as thin as possible and that the face of the transducer be kept parallel to the surface of the test specimen.

Turn to page 2-10.

From page 2-10

The statement you chose, "the acoustic impedance of a couplant should be greater than the acoustic impedance of the test specimen," is not correct.

Remember we said that the couplant also serves as an acoustic impedance matching media. To perform this service its acoustic impedance must be between the acoustic impedance of the transducer and the acoustic impedance of the test specimen.

Turn to page 2-13.

[redacted])

From page 2-10

Right. The acoustic impedance of a couplant should be between the acoustic impedance of the transducer and that of the test specimen.

In immersion testing the couplant is the liquid, usually water with a wetting agent and a corrosion inhibitor added.

Turn to page 2-14 for a review.

From page 2-13

1. Ultrasonic vibrations (sound energy) travel (poorly, readily) _____ through air.

3. Wet

4. A practical couplant must be easy to ap_____, and easy to re_____ but still have a tendency to st_____ on the surface.

6. corrosion inhibitor

7. The choice of couplant is largely dependent upon the condition of the t_____ sur_____.

9. uniform

10. The acoustic im_____ of a couplant should be between the acoustic im_____ of the transducer and that of the test specimen.

1. poorly

2. Since air is a very poor conductor of sound energy a cou_____t is used between the transducer and the test specimen to exclude air.

4. apply, remove, stay

5. To improve their wetting ability and help them stay on the surface, couplants have we_____ ag_____ added to them.

7. test surface

8. To ensure good sound transfer the couplant must be as th_____ as practicable.

10. impedance, impedance

11. In immersion testing the couplant is the _____.

2. couplant

3. To exclude all air from between the transducer and the test surface the couplant must w_____ the surface.

Return to page 2-14, frame 4.

5. wetting agents

6. Most couplants also have a cor_____ inh_____ added.

Return to page 2-14, frame 7.

8. thin

9. The thickness of the couplant must also be kept uni_____ to prevent altering the direction of the sound beam.

Return to page 2-14, frame 10.

11. liquid (water)

Turn to the next page and begin Chapter 3.

Standard Reference Blocks

In ultrasonic testing all discontinuity indications (pips) are compared to a reference standard. The reference standard may be any one of many reference blocks or sets of blocks specified for a given test. The ideal reference standard would be a mate to the part being tested with known discontinuities. Certain standard reference blocks (often called test blocks) are used primarily for contact testing, others for immersion testing, and some for both. Still other standard reference blocks are made for specific applications. Only those in common usage will be discussed in this chapter.

Turn to page 3-2.

Standard reference blocks are made from carefully selected, ultrasonically tested stock that meets predetermined standards of attenuation, grain size, and heat treat and that is discontinuity free. They are made from either square or cylindrical stock with ends cut parallel. An artificial discontinuity, in the form of a precisely drilled flat-bottom hole, is then added at the center of one end of the block. A cross section of a standard reference block is illustrated in view A. Dimensions A, B and C must be precise and the bottom of the flat-bottom hole must be parallel to the test surface of the block and be absolutely flat.

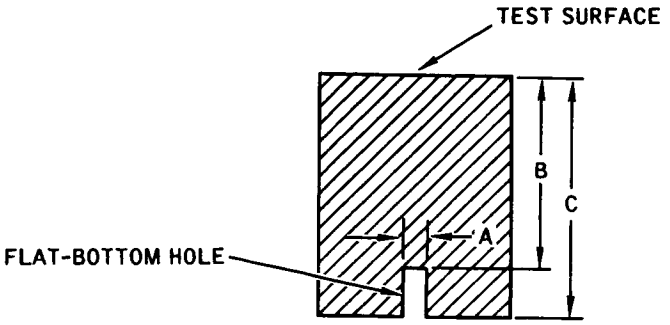

VIEW A

In views B and C below, which represents an acceptable reference block?

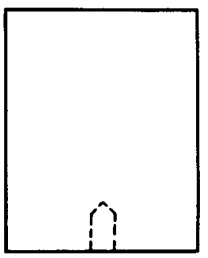

VIEW B

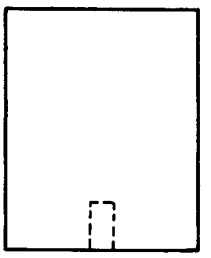

VIEW C

View B . . . . . Page 3-3

View C . . . . . Page 3-4

From page 3-2

View B is the wrong choice. Take another look at those two views.

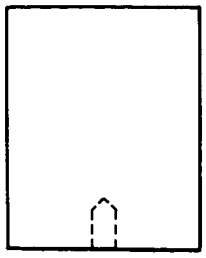

VIEW B

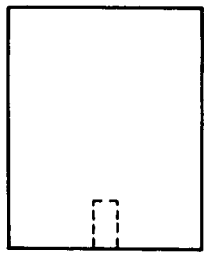

VIEW C

Now do you see it? The hole drilled in the bottom of the block in view B is not flat-bottomed. Sound energy striking such a surface would be reflected in all directions and the reflections returning to the transducer would not be representative of the size of the hole (artificial discontinuity). Note the illustrations below. But when the sound strikes the flat-bottom hole a maximum amount of sound energy will be reflected back to the transducer that is representative of a discontinuity the size of the hole in the block, at the same depth.

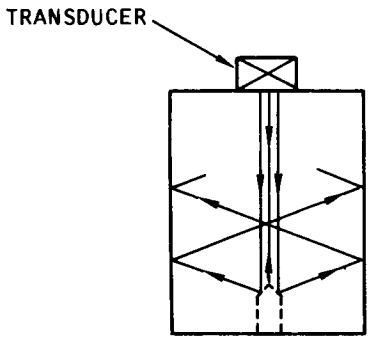

VIEW B

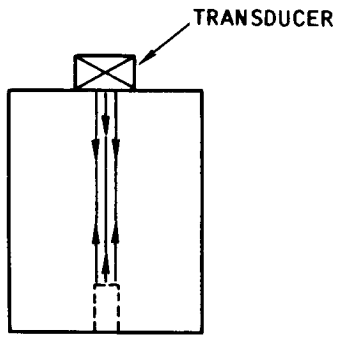

VIEW C

Turn to page 3-4.

Right. In view C the hole drilled in the bottom of the block has a flat bottom while the one in view B does not. A flat-bottom hole will reflect a maximum amount of sound energy for the size discontinuity it represents. If the bottom of the hole is irregular the amount of sound reflected will vary with the irregularity and such holes would be impossible to duplicate. The flat-bottom hole represents the ideal discontinuity surface and is a repeatable standard.

The three most familiar sets of standard reference blocks are the Alcoa series A, area amplitude blocks, the Alcoa series B, or Hitt, distance amplitude blocks, and the ASTM basic set that combines area and distance amplitude blocks. Area amplitude blocks provide standards for discontinuities of different sizes, at the same depth, in a given material. Distance amplitude blocks provide standards for discontinuities of the same size, at different depths, in a given material.

Which of the following is correct?

Area amplitude blocks provide discontinuity size reference and distance amplitude blocks provide depth reference . . . . . Page 3-5

Area amplitude blocks provide discontinuity depth reference and distance amplitude blocks provide size reference . . . . . Page 3-6

[redacted])

Right again. The area amplitude blocks provide a standard reference for discontinuities of several sizes, at a given depth, in a given material; and the distance amplitude blocks provide a standard reference for a given size discontinuity at varying depths, in a given material.

The Alcoa series A, area amplitude blocks, illustrated below, consists of eight blocks 3-3/4 inches long and 1-15/16 inches square. Each block has a 3/4-inch deep flat-bottom hole drilled in the center of the bottom surface. The hole diameters vary from 1/64 inch to 8/64 inch. The blocks are numbered to correspond with the diameter of the holes. That is, the No. 1 block has the 1/64-inch diameter hole, the No. 2 block has the 2/64-inch diameter hole, and so on through the No. 8 block which has the 8/64-inch diameter hole.

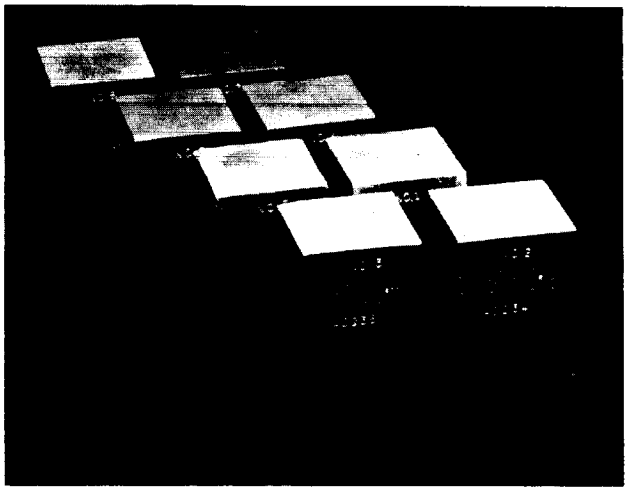

What diameter hole would the No. 6 block have?

6/64 inch . . . . . Page 3-7
3/4 inch . . . . . Page 3-8

From page 3-4

Sorry, it's the other way around. Area equals size and distance equals depth. The area refers to the size of the side of the discontinuity facing the transducer. Distance refers to how far the discontinuity is from the test surface, or in other words, how deep in the test block.

Turn to page 3-5.

From page 3-5

Right, the No. 6 block would have a 6/64-inch diameter hole. All of the holes are 3/4-inch deep and all of the area amplitude blocks have a three-inch metal distance.

Metal distance is the distance from the top surface of the block to the flat-bottom hole (artificial discontinuity). The metal distance is the same for all the blocks in an area amplitude set but is different for each block in a distance amplitude set. Only the size of the artificial discontinuities (flat-bottom holes) is different in the area amplitude blocks. Area amplitude blocks provide a means of checking the linearity of the test system; that is, they are used to confirm that the amplitude (height) of the pip on the CRT screen increases in proportion to the increase in size of the discontinuity. Similar area amplitude blocks are made from 2-inch diameter stock.

Area amplitude blocks can be used to verify the test systems linearity because...

the metal distances differ in proportion to the hole size . . . . . Page 3-9
the artificial discontinuities increase proportionately in size while the metal distance remains the same . . . . . Page 3-10

From page 3-5

Your selection of 3/4-inch is incorrect. All of the holes are 3/4-inch deep but the No. 6 block would have a 6/64-inch diameter hole. To repeat, the block No. and hole size relationship is shown below.

No. 1 block - 1/64-inch diameter hole

No. 2 block - 2/64-inch diameter hole

No. 3 block - 3/64-inch diameter hole

No. 4 block - 4/64-inch diameter hole

No. 5 block - 5/64-inch diameter hole

No. 6 block - 6/64-inch diameter hole

No. 7 block - 7/64-inch diameter hole

No. 8 block - 8/64-inch diameter hole

Turn to page 3-7.

[redacted]

From page 3-7

No, that's not the reason. The metal distances do not differ in the area amplitude set of test blocks. It is because the metal distances are the same in all eight blocks that a direct comparison can be made of the responses (pips) from discontinuities (flat-bottom holes) of different sizes. The difference in size of the flat-bottom holes is the only variable from block to block, so the change in pip height on the CRT screen must be directly related to the change in the size of the flat-bottom hole (artificial discontinuity).

Turn to page 3-10.

[redacted])

Exactly right. The area amplitude blocks can be used to verify the linearity of the testing system because the only variable in the blocks is the size of the artificial discontinuity. Therefore if the pips on the CRT screen increase in size in proportion to the size of the flat-bottom holes (artificial discontinuities) in the blocks, the testing system is linear.

The Alcoa series B, or Hitt, distance amplitude blocks, shown below, consists of 19, 2-inch diameter blocks. All the blocks have a 3/4-inch deep flat-bottom hole drilled in the center of the bottom surface. The hole diameter is the same in all the blocks of a set. Sets are available with hole diameters of 3/64 inch, 5/64 inch or 8/64 inch. The blocks vary in length to provide metal distances of 1/16 inch to 5-3/4 inches from the test surface to the flat-bottom hole. The metal distances are 1/16 inch, 1/8 inch, through 1 inch in eighth inch increments, and 1-1/4 inches through 5-3/4 inches in half inch increments. Distance amplitude blocks serve as a reference to evaluate the size of discontinuities found at varying depths within the test material.

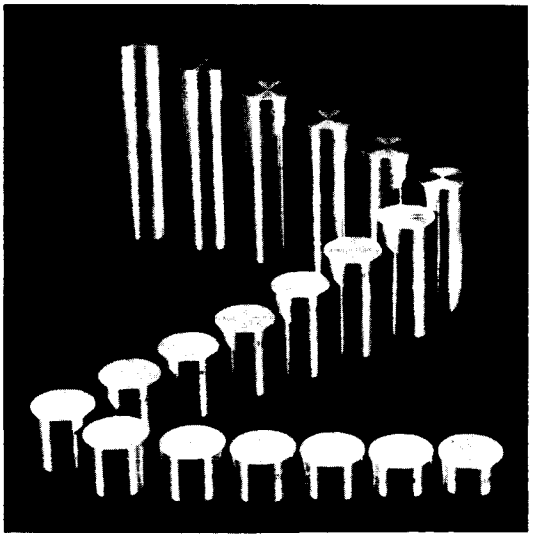

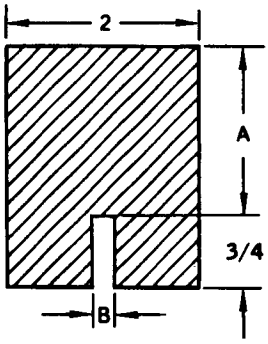

DIMENSION A
1/16
1/8
1/4
3/8
1/2
5/8
3/4
7/8
1
1 1/4
1 3/4
2 1/4
2 3/4
3 1/4
3 3/4
4 1/4
4 3/4
5 1/4
5 3/4

DIMENSION B
3/64
5/64
8/64

In a given set of distance amplitude blocks which is the known variable?

The flat-bottom hole size . . . . . Page 3-11

The metal distance . . . . . Page 3-12

From page 3-10

You probably didn't think that question over very carefully. In a given set of distance amplitude reference blocks only the metal distance varies. The diameter of the flat-bottom holes will all be the same. The hole diameters do vary from one set of distance amplitude blocks to another.

Turn to page 3-12.

Right, the metal distance is the only variable in a given set of distance amplitude test blocks. The flat-bottom hole diameter varies only from one set of blocks to another.

In addition to being used to evaluate the size of discontinuities at varying depths, the distance amplitude blocks are used to standardize the testing equipment. Standardizing does two things; it verifies that the instrument/transducer combination is performing as required and it establishes an instrument gain setting at which the CRT screen display is meaningful for the material to be tested. Standardization will be discussed in more detail in a later chapter.

Evaluation of discontinuities within the test material is accomplished by comparing the amplitude (height) of the pips from them with the amplitude of the pip from the artificial discontinuity of known size in the reference block with a metal distance that is closest to the depth of the discontinuity in the test material. The depth of the discontinuity in the test material will be known by its position on the CRT screen.

If the pip on the CRT screen indicates a discontinuity 1-3/8 inches below the surface of the test specimen which reference block would you compare it to?

Reference block with 1-1/4 inches metal distance . . . . . Page 3-13
Reference block with 1-3/4 inches metal distance . . . . . Page 3-14

Right, the reference block with the 1-1/4 inch metal distance has the artificial discontinuity (flat-bottom hole) nearest to the same distance from the test surface as the discontinuity in the test specimen.

When comparing the pips from a discontinuity in the test specimen to those from the artificial discontinuity in the reference block, it is important to remember that the artificial discontinuity is an ideal reflecting surface while the reflecting surface of the discontinuity in the test part will be less than ideal. This means, for example, that a pip from a 3/64-inch discontinuity in the test specimen would be shorter than the pip from a 3/64-inch artificial discontinuity (flat-bottom hole), even though they were both the same distance below the surface, and in the same kind of material.

When the amplitude of a pip from a discontinuity in a test specimen is the same as that from an artificial discontinuity in a reference block, and both are the same depth below the surface, is the discontinuity in the test specimen smaller than, the same size as, or larger than the artificial discontinuity?

Smaller than . . . . . Page 3-15
The same size as . . . . . Page 3-16
Larger than. . . . . Page 3-17

From page 3-12

The 1-3/4 inch metal distance block would not be the best choice. The 1-1/4 inch block would be a better choice because the 1-1/4 inch metal distance more nearly duplicates the depth of the discontinuity in the test part. 1-1/4 inches is closer to 1-3/8 inches than 1-3/4 inches is. It is obvious that the probability of the reference block metal distance exactly duplicating the discontinuity depth is very small, but the metal distance that most nearly duplicates it should be used.

Turn to page 3-13.

[redacted])

From page 3-13

You made the wrong choice. When the pip amplitude from a discontinuity in a test specimen is the same as that from an artificial discontinuity (flat-bottom hole) in a reference block, and both are at the same depth below the surface, the discontinuity in the test specimen will be larger than the artificial discontinuity.

Note the illustration below. In view B the sound beam strikes the flat-bottom hole (artificial discontinuity) in the reference block. This is a smooth, flat surface parallel to the test surface so it will reflect the maximum amount of sound energy that a discontinuity of this size can reflect, and will project a pip on the CRT screen of, for example, 1 inch. In view A the sound beam strikes the discontinuity in the test specimen and since it is unlikely that this surface will be perfectly flat and parallel to the test surface, it will reflect something less than the maximum amount of sound energy that a discontinuity of this size could reflect. It would, therefore, project a pip on the CRT screen of something less than 1 inch. So you can see that if the true discontinuity and the artificial discontinuity are the same size, the pip from the true discontinuity will always be smaller. It follows then that if the pips were the same size, the true discontinuity would be larger than the artificial discontinuity.

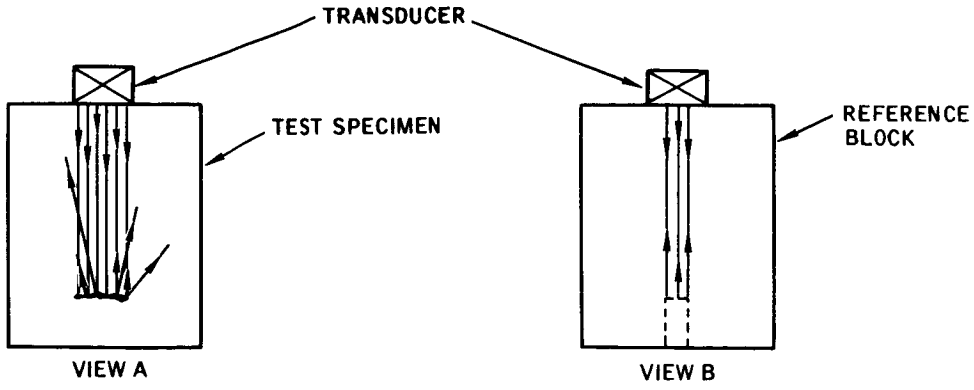

Turn to page 3-17.

[redacted])

You made the wrong choice. When the pip amplitude from a discontinuity in a test specimen is the same as that from an artificial discontinuity (flat-bottom hole) in a reference block, and both are at the same depth below the surface, the discontinuity in the test specimen will be larger than the artificial discontinuity.

Note the illustration below. In view B the sound beam strikes the flat-bottom hole (artificial discontinuity) in the reference block. This is a smooth, flat surface parallel to the test surface so it will reflect the maximum amount of sound energy that a discontinuity of this size can reflect, and will project a pip on the CRT screen of, for example, 1 inch. In view A the sound beam strikes the discontinuity in the test specimen and since it is unlikely that this surface will be perfectly flat and parallel to the test surface, it will reflect something less than the maximum amount of sound energy that a discontinuity of this size could reflect. It would, therefore, project a pip on the CRT screen of something less than 1 inch. So you can see that if the true discontinuity and the artificial discontinuity are the same size, the pip from the true discontinuity will always be smaller. It follows then that if the pips were the same size, the true discontinuity would be larger than the artificial discontinuity.

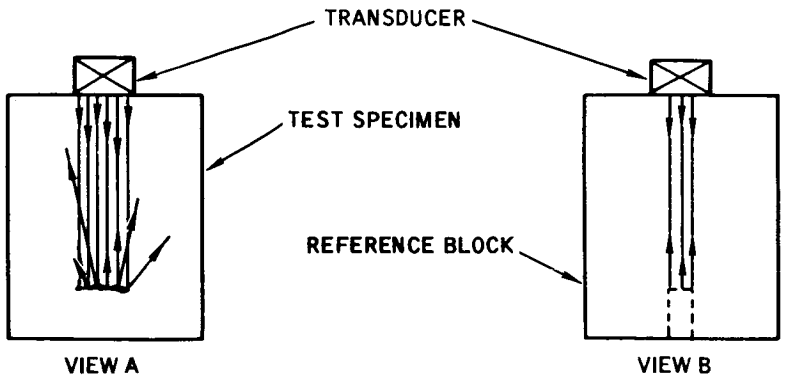

Turn to page 3-17.

Exactly right. When the pip amplitude from a discontinuity in a test specimen is the same as that from an artificial discontinuity in a reference block, at the same depth below the surface, the discontinuity in the test specimen is larger than the artificial discontinuity. This is true because the artificial discontinuity will invariably have a better sound energy reflecting surface than the true discontinuity.

The basic set of ASTM reference blocks, as we said before, is a combination of area and distance amplitude blocks. The ASTM basic set of reference blocks consists of ten 2-inch diameter blocks. Again each block has a 3/4-inch deep hole drilled in the center of the bottom surface. One block has a 3/64-inch diameter hole and a metal distance of 3 inches from test surface to flat-bottom hole. Seven blocks have 5/64-inch diameter holes and metal distances of 1/8-inch, 1/4-inch, 1/2-inch, 3/4-inch, 1-1/2 inches, 3 inches and 6 inches. The remaining two blocks have 8/64-inch diameter holes and metal distances of 3 inches and 6 inches. In this basic set the three, 3 inch metal distance blocks, with the 3/64-inch, 5/64-inch, and 8/64-inch diameter holes, provide the area amplitude relationship and the seven blocks with the 5/64-inch holes at varying metal distances provide the distance amplitude relationship.

Which is the more important advantage of the basic set of ASTM reference blocks?

The basic set of ASTM reference blocks provides both area amplitude and distance amplitude references in one set . . . . . Page 3-18
The basic set of ASTM reference blocks covers a wider range of conditions with fewer blocks . . . . . Page 3-19

Right, the main advantage to the basic set of ASTM reference blocks is that they provide area amplitude and distance amplitude references in one small set. The full set of ASTM reference blocks consists of 46 blocks.

Although up till now the specific material of the standard reference blocks has not been mentioned it is most important that the test block material be the same or similar to that of the part being tested. Alloy content, heat treatment, amount of hot or cold working from forging, rolling, etc. all affect the acoustical properties of the material. If test blocks of identical material are not available, they must be similar in sound attenuation, sound velocity and acoustic impedance. Standard reference blocks should be available of all materials regularly tested.

When choosing a standard reference block with which to evaluate the sound energy responses from a test specimen...

the material of the reference block is not important as long as the metal distance of the reference block is the same as or close to the depth of the discontinuity in the test part . . . . . Page 3-20

the material of the reference block must be the same as or similar to that of the test part . . . . . Page 3-21

[redacted])

From page 3-17

You missed the idea of the basic set of ASTM reference blocks. The main advantage of this set is that it combines area amplitude and distance amplitude references in one set.

Turn to page 3-18.

From page 3-18

You selected the wrong answer. When choosing a standard reference block with which to evaluate the sound energy response from a discontinuity in a test part the reference block metal distance must be close to the same as the depth of the discontinuity in the test part but it is also most important that the reference block material be the same as or similar to that of the test part. Sound energy reflections from discontinuities of the same size, at the same depth, in dissimilar materials can be vastly different, so no worthwhile evaluation could be made.

Turn to page 3-21.

Right, the material of the reference block must be the same as or similar to the material being tested to make a worthwhile evaluation of the discontinuity in the test specimen.

Standard reference blocks do not by any means provide all the answers to discontinuity evaluation. For irregularly shaped parts it is often necessary to make one of the parts into a reference standard by adding artificial discontinuities to it in the form of flat-bottom holes, saw cuts, notches, etc. In some cases these artificial discontinuities can be so placed that they will be removed by subsequent machining of the part. In other cases special individual techniques may have to be developed by careful study of a part ultrasonically, and then verifying the discontinuities detected by destructive investigation. The results of the study then become the basis for the testing standard. Pipe and tubing reference standards are usually made by cutting notches or slots in both the inside diameter and outside diameter walls of a representative sample.

In ultrasonic testing all discontinuity indications are evaluated by comparing them to...

standard reference blocks such as the Alcoa series A and B blocks and the ASTM reference blocks . . . . . Page 3-22

standard reference blocks or to specially prepared representative samples . . . . . Page 3-23

[redacted])

NO, the standard reference blocks alone are not enough to do the job. They are fine for a large percentage of ultrasonic testing applications but many other applications require specially made reference standards.

Return to page 3-21 and reread the second paragraph. Then choose the other answer.

[redacted])

From page 3-21

Right. Both the standard reference blocks and specially made reference standards are required to evaluate the discontinuity indications received in ultrasonic testing. When testing complex assemblies it is likely that both will be used.

The terms standard reference blocks or standard test blocks are generally understood to mean the blocks you have just learned about. However, there is another type of blocks, also referred to as test blocks or reference blocks, that are more correctly designated standard calibration blocks.

Calibration Blocks

Specially designed calibration blocks are used in contact testing to check the operation of ultrasonic instruments and transducers and to make certain adjustments to the instruments to best suit the testing conditions. "Calibration blocks" are often referred to as "standard reference blocks," but in the sense of providing artificial discontinuities of known size and depth for comparison to discontinuities found in parts being tested, they are not reference blocks. They are reference blocks in the sense that adjustments to ultrasonic instruments are repeatable when made to the fixed dimensions of these blocks.

Turn to page 3-24.

From page 3-23

Now you are ready to start back through the book and read those upside-down pages.

TURN OR ROTATE THE BOOK 180° - LIKE THIS

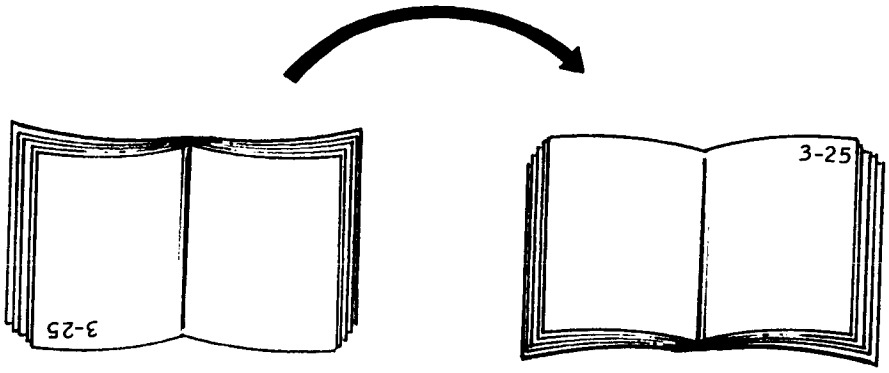

READ PAGE 3-25 AND CONTINUE AS BEFORE.

The IIW (International Institute of Welding) calibration block is illustrated below. The IIW calibration block provides known distances and angular relationships for adjusting (calibrating) the CRT screen presentation to best represent the thickness of the test specimen, to verify the angle of angle beam transducers, to verify the beam exit point of angle beam transducers, to adjust the instrument for maximum resolution, and to determine relative sensitivity of the instrument and transducer.

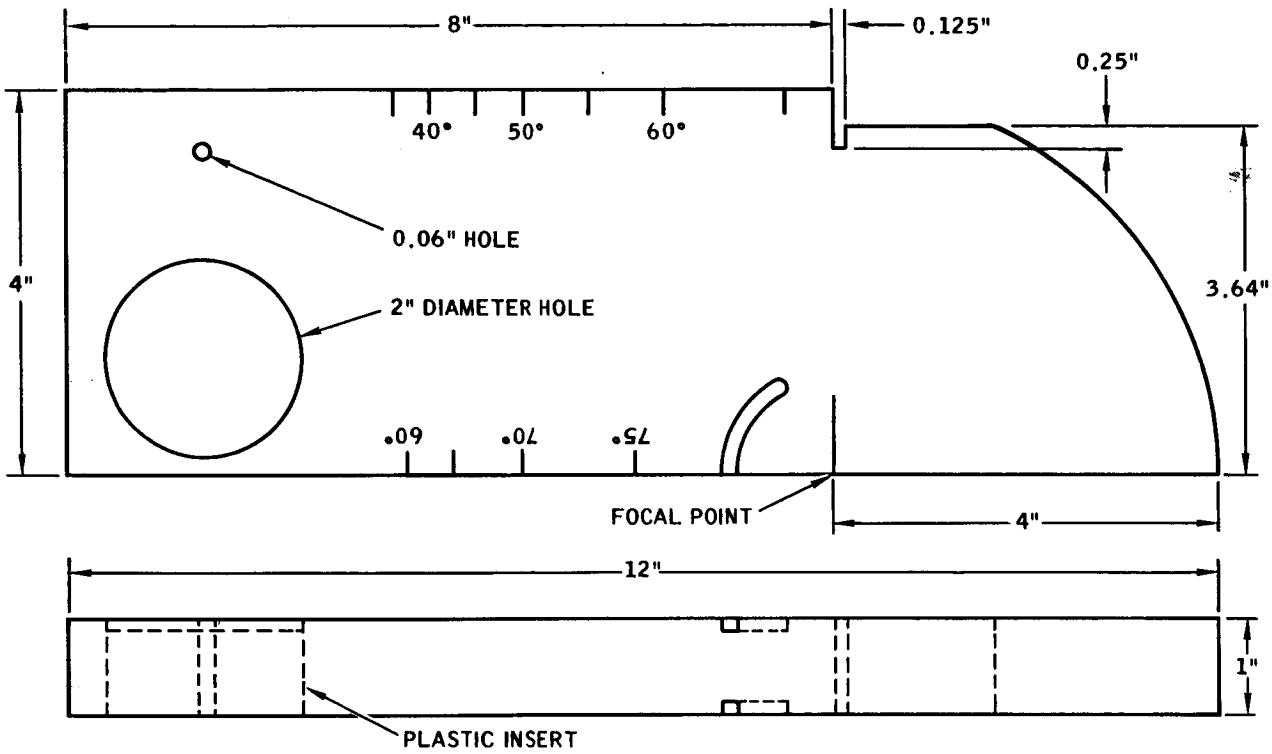

Which of the following statements describes the purpose of the IIW calibration block?

The purpose of the IIW calibration block is to provide a direct relationship between artificial discontinuities in the block and true discontinuities in a test specimen . . . . . Page 3-26

The IIW calibration block is used to check certain operational characteristics of ultrasonic instruments and transducers and in making certain adjustments . . . . . Page 3-27

No, that is what the IIW calibration block does not do that its cousins the Alcoa and Hitt standard reference blocks do.

The IIW calibration block is a standard reference to which ultrasonic instrument and transducer capabilities can be checked, and to which repeatable adjustments can be made.

Turn to page 3-27.

[redacted]

Right, the IIW calibration block is used to verify certain operational capabilities of ultrasonic instruments and transducers and in making certain adjustments.

In contact angle beam testing the beam exit point of the transducer must be known to accurately determine the location of discontinuities in a test part. The beam exit point of a transducer is the point at which the axis of the sound beam leaves the transducer. In the illustration below the IIW block is being used to verify the beam exit point of the transducer. From the position shown the transducer is moved back and forth until the pip on the CRT screen reaches maximum amplitude. The focal point (line) on the IIW block then corresponds with the beam exit point on the transducer.

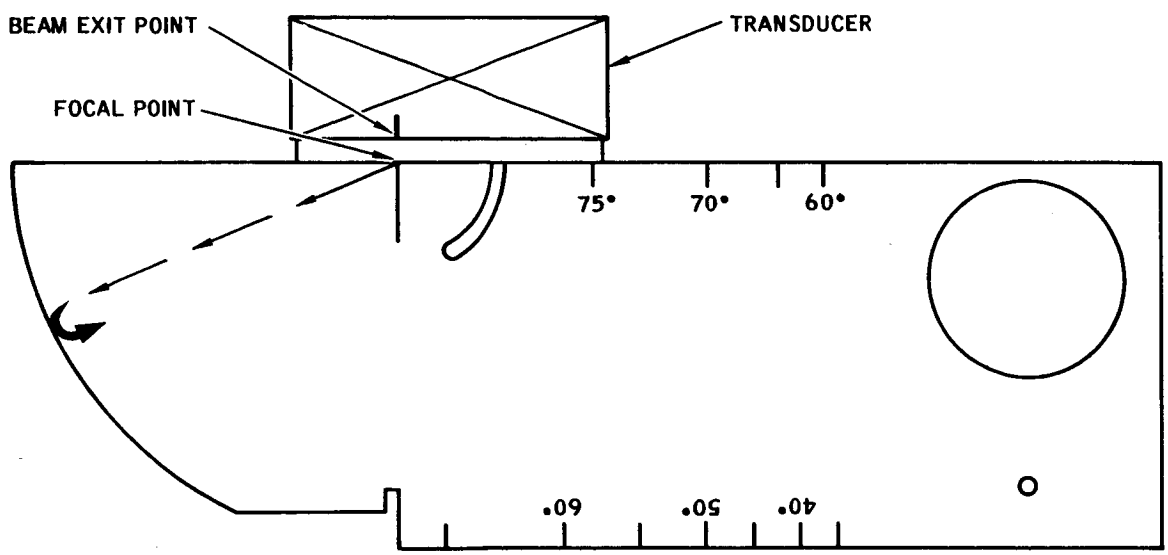

Assume that when the transducer is located as shown in the illustration, the pip on the CRT screen is at maximum amplitude.

Is the beam exit point correctly marked on the transducer?

Yes . . . . . Page 3-28

No . . . . . Page 3-29

Yes is the correct answer. We said that the pip on the CRT screen was at maximum amplitude, and since the beam exit point line on the transducer is perfectly aligned with the focal point (line) on the IIW block, the transducer beam exit point line is correctly located. If the two lines are not perfectly aligned when the pip amplitude is at the maximum, the beam exit point line on the transducer should be relocated to match the focal point line on the IIW block, or the mismatch should be noted on the transducer data sheet.

The plastic wedge of angle beam transducers is subject to wear in normal usage and this wear can change both the beam exit point and the angle of the sound beam. In the illustration below the IIW block is being used to verify the angle of refraction of the transducer sound beam. From the position shown the transducer is moved back and forth until the sound reflection from the 2-inch hole in the block produces a pip of maximum amplitude on the CRT screen. The angle of the sound beam can then be read from the degrees scale on the block at the point where the transducer beam exit point meets the block. In the illustration the block verifies that the angle of the sound beam from a 60 degree transducer is 60 degrees.

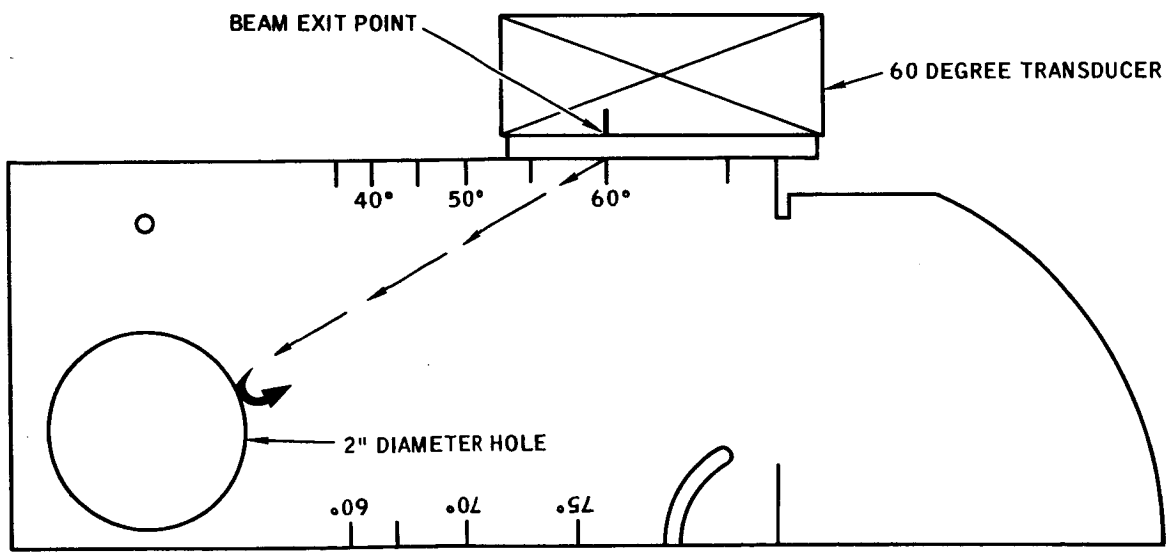

Which would you check first?

Angle of transducer sound beam . . . . . Page 3-30

Transducer sound beam exit point . . . . . Page 3-31

You said no, that the beam exit point on the transducer in the illustration is not correctly marked. You either need to take another look or you don't understand the criteria for verifying the beam exit point of an angle transducer. Let's take another look.

The IIW block is so designed that when any angle transducer is placed on the IIW block, as shown in the illustration, near the focal point, the maximum sound reflection will be received from the radius of the block when the axis of the transducer sound beam passes through the focal point of the block. (The focal point of the block is a point at the top of the line identified "FOCAL POINT" in the illustration). Therefore, whenever the sound reflection from the radius of the block is at the maximum (indicated by a pip on the CRT screen of maximum amplitude), the axis of the sound beam (beam exit point) coincides with the focal point on the block.

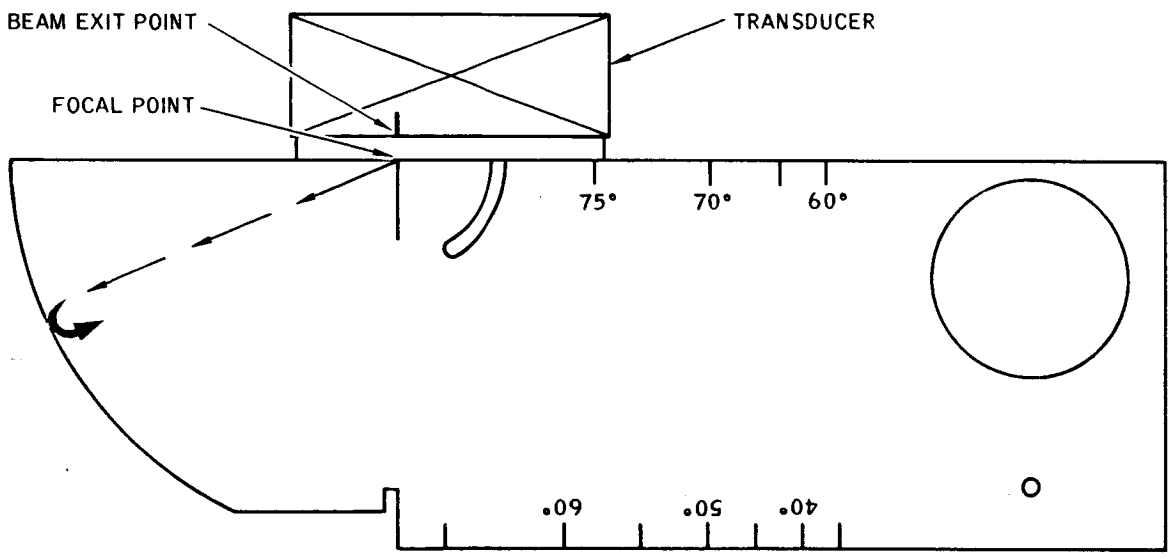

Turn to page 3-28.

From page 3-28

You didn't think that one out. It would not be wise to check the angle of the transducer sound beam first because determining the angle of the sound beam is dependent upon an accurately located beam exit point. The location of the beam exit point of the transducer on the degrees scale of the IIW block, when the sound beam reflection is the greatest, determines the angle of the transducer. So, if the beam exit point is in error the angle reading would be also. It would be best to verify the transducer beam exit point first.

Turn to page 3-31.

[redacted]

Right. It is most important that the sound beam exit point be checked first because the first step in checking the angle of a transducer is to place the transducer on the IIW block with the beam exit point aligned with the degree mark on the block that corresponds to the nominal angle of the transducer. If the beam exit point marking is incorrect, the check will be meaningless.

The resolving power of the testing equipment can be estimated by placing the transducer on the IIW block as shown in view A. The degree of separation of the pips, on the CRT screen, from the three reflecting surfaces indicates the resolving power of the instrument/transducer combination. This resolution check differs from that made with the Alcoa or Hitt reference blocks since this check is made at a metal distance of approximately 4 inches whereas with the Alcoa or Hitt blocks it is made close to the surface.

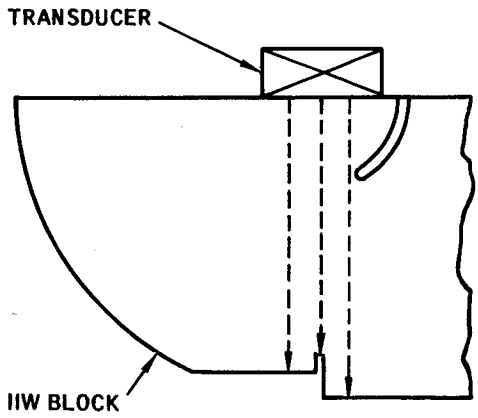

VIEW A

CRT DISPLAY

If the instrument/transducer combination cannot separate the pips satisfactorily you would...

try a different transducer . . . . . Page 3-32
use a reference block of different material . . . . . Page 3-33

Right, if the instrument/transducer combination cannot separate the pips satisfactorily it is very likely that a transducer of greater resolving power is required for the material to be tested. This is part of the purpose of the IIW block, to determine if the equipment is capable of performing the required tests.

The IIW block is made from mild steel and all its dimensions were carefully calculated based on its sound velocity (5940 m/sec). Similar blocks of other materials would have slightly different dimensions depending upon the sound velocity of the material. As is true with the Alcoa and Hitt reference blocks, the material of the calibration block should be of the same material as the specimen being tested. For example, the angle of refraction of any angle transducer would be quite different in aluminum than in steel.

If an IIW calibration block were made of aluminum, would it have the same dimensions as the steel block?

Yes . . . . . Page 3-34
No . . . . . Page 3-35

From page 3-31

No, using a reference block of different material would hardly solve the problem, since the reference block must be of the same material as the test specimen if the resolution ability reference is to be of any value.

Turn to page 3-32.

[redacted]

From page 3-32

Yes is the wrong answer. Some of the dimensions of the aluminum block would have to be different from the steel block because the sound velocity in aluminum is different than the sound velocity in steel and the dimensions of an IIW calibration block are based on the velocity of the material.

Turn to page 3-35.

Right. Since the dimensions of the IIW block are based on the sound velocity in mild steel they would not all apply to the aluminum block which has a different sound velocity.

The miniature angle beam block shown below is similar to the IIW calibration block, but is limited to instrument range calibration, and transducer beam exit point and refracted angle verification. It is intended for use away from the testing laboratory.

The reference plate, also shown below, is another type of direct comparison reference for evaluating the size and depth of discontinuities found in a test specimen.

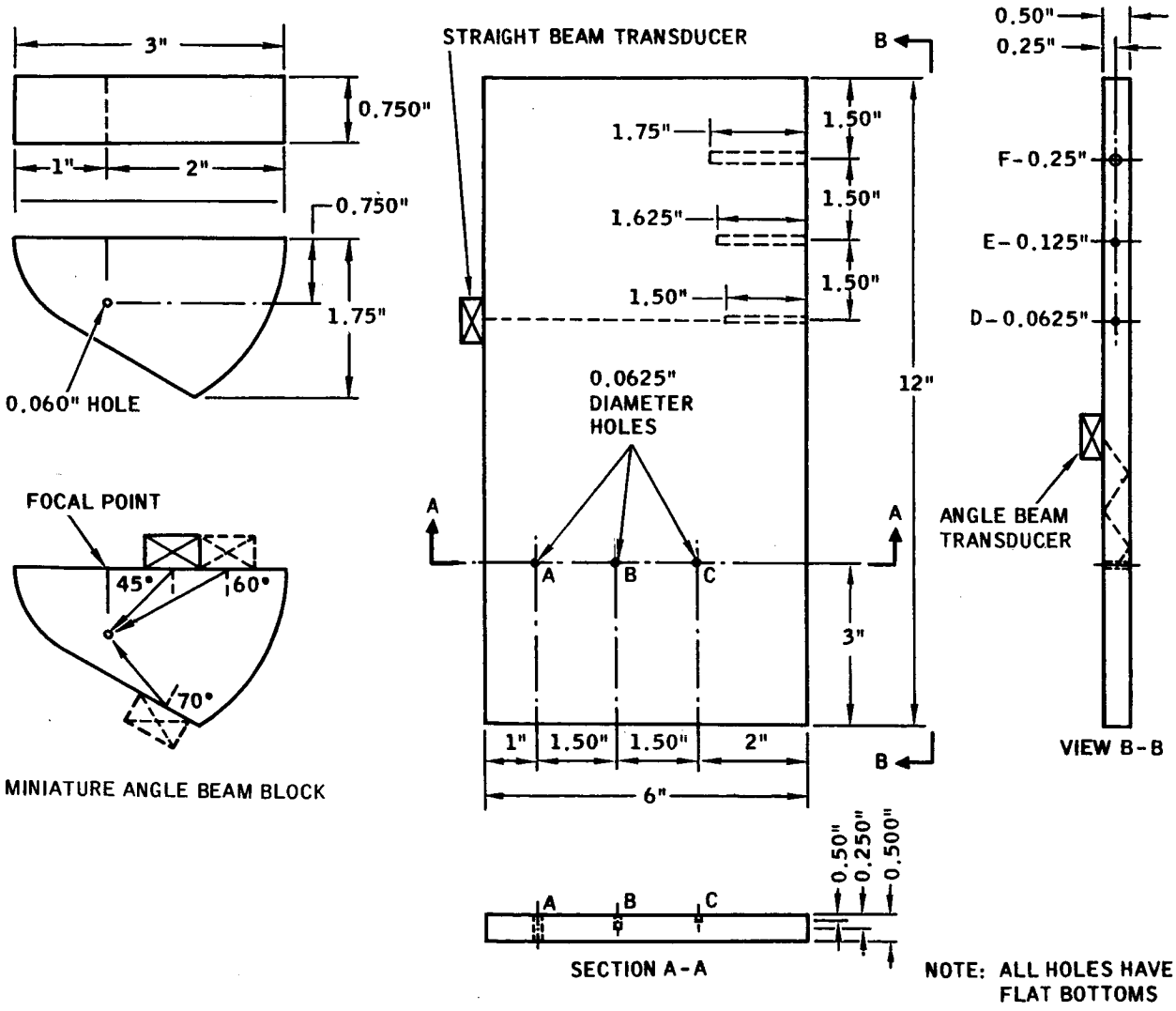

ULTRASONIC REFERENCE PLATE

Turn to page 3-36 for a review.

From page 3-35

1. In ultrasonic testing, all discontinuity indications (pips) are compared to a ref _____ stan _____ for evaluation of size.

7. size

8. In a set of area amplitude blocks the metal distances are all (alike, different) _____.

14. area

15. The basic set of ASTM reference blocks is a combination of _____ amplitude and _____ amplitude blocks.

21. location

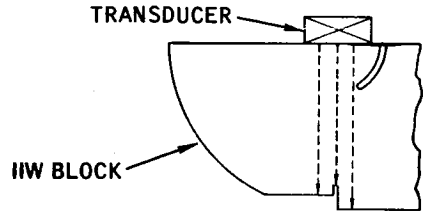

22. In this illustration the IIW block is being used to estimate the (sensitivity, resolution) _____ of the testing system.

1. reference standard

2. Standard reference blocks are made from carefully selected, ultrasonically tested stock that is dis_____ free.

8. alike

9. The Alcoa series A, area amplitude, blocks have hole diameters of 1/64 inch through 8/64 inch. The No._____block has a 5/64-inch diameter hole.

15. area, distance

16. When comparing ultrasonic indications from a test specimen to the responses from a standard reference block, both reference block and test specimen must be of the sa_____ or si_____ material.

22. resolution

23. The IIW calibration block and the test specimen must be made of the sa_____ or si_____ material.

2. discontinuity

3. Artificial discontinuities are added to the reference blocks in the form of precisely drilled f_____-bot_____ holes.

9. five

10. In a set of distance amplitude blocks, the known variable is the (flat-bottom hole size, metal distance) _____.

16. same, similar

17. When the shape of a test specimen makes comparison to a standard reference block impractical, ar_____ dis_____ may be added to the test specimen as reference points.

23. same, similar

24. The dimensions of IIW blocks of different materials would be (the same, different) _____.

3. flat-bottom

4. The flat bottom of the artificial discontinuity hole must be par _____ to the test surface of the block.

10. metal distance

11. Distance amplitude blocks provide discontinuity (size, depth) _____ reference.

17. artificial discontinuities

18. The IIW (International Institute of Welding) calibration block is used in (contact, immersion) _____ testing.

24. different

25. The miniature angle beam block is a limited version of the IIW block intended for use only (in, outside) _____ the laboratory.

4. parallel

5. The flat-bottom hole parallel to the surface of the reference block is an ideal ref _____ sur _____ for the sound beam.

11. depth

12. To evaluate the size of a discontinuity in a test part, the amplitude of the pip from the true discontinuity must be compared to the amplitude of the pip from an artificial discontinuity at the same de _____

18. contact

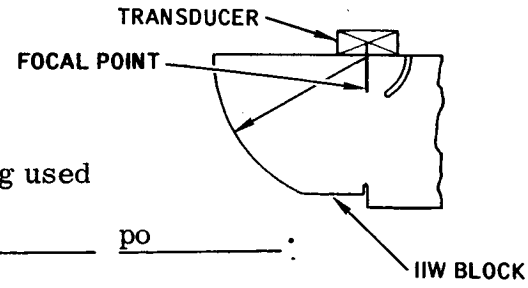

19. In the illustration, the IIW block is being used to verify the transducer be _____ ex _____ po _____.

25. outside

26. Reference plates are another type of dir _____ com _____ reference for evaluating discontinuities.

5. reflecting surface

6. The distance between the flat-bottom hole (artificial discontinuity) and test surface is known as the me_____ distance of the reference block.

12. depth

13. When the amplitude of the pips from a true discontinuity and an artificial discontinuity is the same, and both are the same depth below the surface, the true discontinuity will be (smaller than, the same size as, larger than) _____ the artificial discontinuity.

19. beam exit point

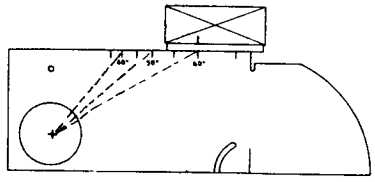

20. In this illustration, the a_____ of the transducer is being checked with the IIW block.

26. direct comparison

Now turn to page 4-1 and continue with Chapter 4.

6. metal

7. Area amplitude blocks provide discontinuity (size, depth) _____ references.

Return to page 3-36, frame 8.

13. larger than

14. The linearity of an ultrasonic testing system can be verified with (area, distance) _____ amplitude blocks.

Return to page 3-36, frame 15.

20. angle

21. In contact angle beam testing, the beam exit point and the exact angle of refraction of the transducer must be known to accurately determine the lo_____ of a discontinuity in the test specimen.

Return to page 3-36, frame 22.

PULSE-ECHO/THROUGH TRANSMISSION INSTRUMENT

The generator/indicator unit, commonly known as the instrument, consists basically of the components shown in the block diagram below.

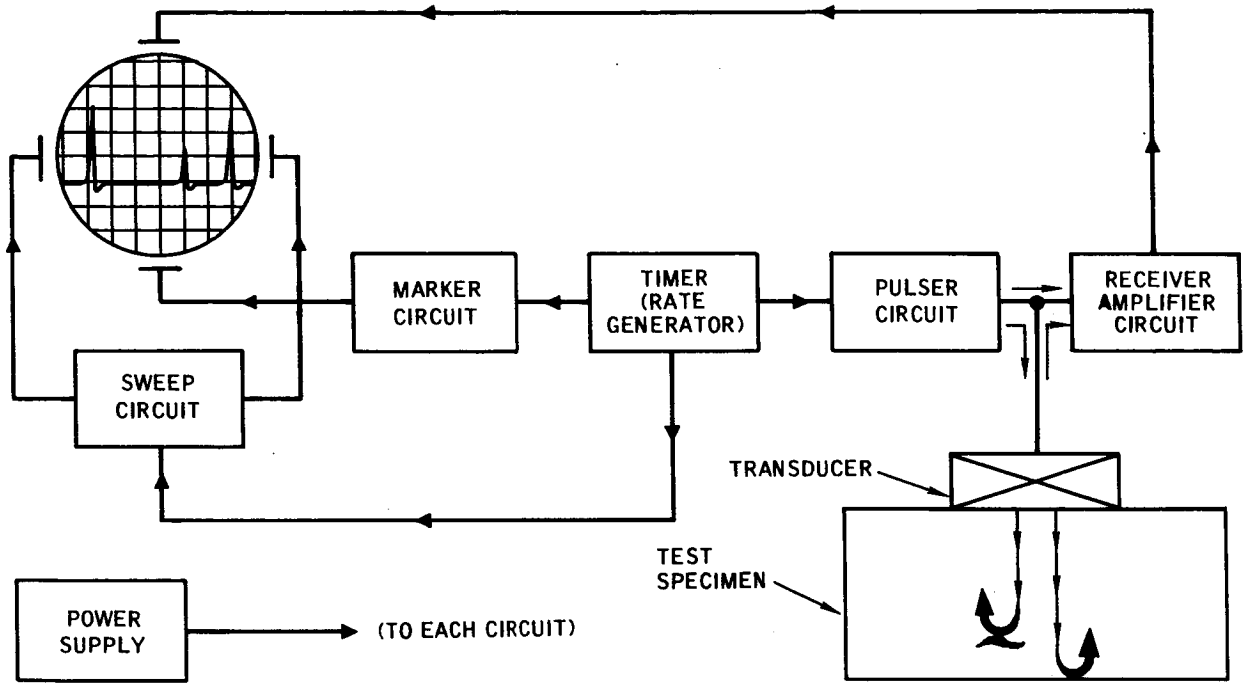

A-SCAN PULSE-ECHO UNIT - BLOCK DIAGRAM

Turn to page 4-2.

The instrument generates high voltage electrical pulses of short duration. The pulser circuit controls the duration (alternately called pulse width and pulse length) of the pulse and the timer controls the pulse repetition rate. These electrical pulses are applied simultaneously to the transducer and the receiver amplifier. The transducer converts the electrical pulses into mechanical vibrations (sound waves) which are applied to the material being tested. A large percentage of the sound is reflected from the front surface of the test specimen back to the transducer, the remainder of the sound travels through the material and is reflected by the back surface of the material or by discontinuities within the material. The sound reflected back to the transducer is converted back to electrical pulses, by the transducer, which are amplified by the receiver amplifier and displayed on the CRT screen.

The information we seek about the material we are testing ultrasonically will be displayed on the CRT screen. The CRT screen display is an A-Scan presentation. The A-Scan display indicates discontinuity depth in the test part and the amplitude of the sound reflections from the discontinuity which is a relative measure of the size of the discontinuity.

The exact "how to" operate and adjust the many controls of the various ultrasonic test instruments must be learned from the operation and maintenance manual of the individual instrument. The precise capabilities of each instrument must come from the same source. The names of some of the controls will differ on instruments from different manufacturers.

In this chapter we will teach you about the controls common to most instruments.

Turn to page 4-3.

From page 4-2

We will assume that the instrument is connected to a proper power source and grounded. Power to the instrument is controlled by an ON-OFF switch. On some instruments, continued rotation to the right of the ON-OFF switch increases the CRT scale illumination; on others, scale illumination is adjusted by a separate control.

Soon after the power switch is turned on, a horizontal line of light will appear across the CRT screen. This horizontal line has many names: trace, sweep, time base, or just base line. Probably the most common in ultrasonic testing is sweep line.

After the power switch is turned on, the instrument requires a warm-up period of at least ten minutes before starting any tests.

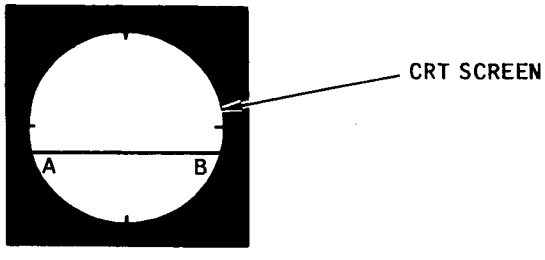

Line AB in the illustration is the...

sweep line . . . . . Page 4-4

horizontal reference line . . . . . Page 4-5

[redacted])

Right. Line AB is the sweep line. The sweep line is caused by the electron beam of the CRT tube sweeping across the CRT screen.

Of immediate interest when the sweep line appears on the screen is its intensity. Excessive brightness will damage the screen; no bright spot should be allowed anywhere along the sweep line or at either end. The intensity of the sweep line does not generally need frequent adjustment so the intensity control is often a screw driver slot adjustment and/or will be located someplace other than on the face of the instrument. If no sweep line appears on the CRT screen or the line is very dim the intensity can be increased until the sweep line is of suitable brightness. The intensity required will usually be dictated by the light conditions surrounding the instrument.

The intensity control of an ultrasonic instrument controls the brightness of...

the CRT screen scale . . . . . Page 4-6
the CRT sweep line . . . . . Page 4-7

From page 4-3

Wrong choice. Line AB is the sweep line. It has several other names but horizontal reference line is not one of them. It is sometimes called the horizontal trace or horizontal sweep but sweep or sweep line is most common. You will also frequently find it called the time base line or just base line.

Turn to page 4-4.

From page 4-4

No, the intensity control of an ultrasonic instrument controls the brightness of the CRT sweep line. The screen scale illumination is controlled either by the scale (or scale illum) control or in conjunction with the power switch.

Turn to page 4-7.

[redacted])

Right. The intensity control of an ultrasonic instrument controls the brightness of the sweep line. The sweep line must be bright enough to be easily seen, but remember that excessive brightness (bright spots) can damage the CRT screen.

The sweep line is also often logically called the time base line because it represents the time it takes the sound to travel from the front surface of the part, through the part, to the back surface of the part. The sweep line provides a time base for the analysis of all information. Time starts at the left end of the line and progresses to the right. The sweep can be adjusted to represent all or any part of the time period required for the sound to travel through the test part.

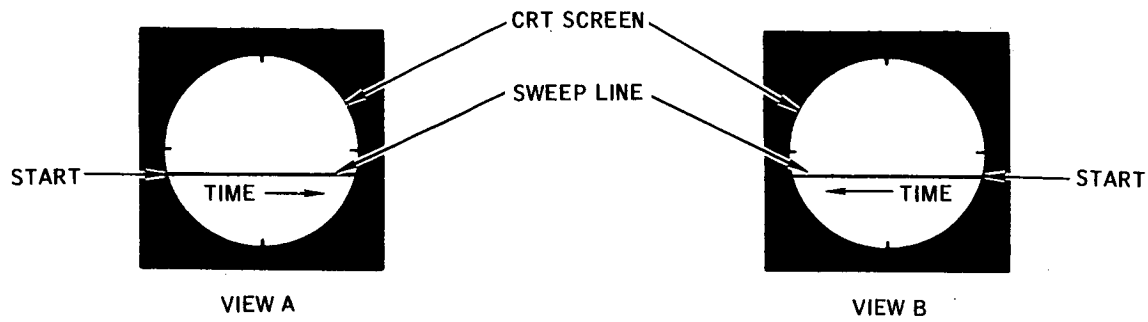

Which view above correctly represents the sweep line time relationship?

View A . . . . . Page 4-8
View B . . . . . Page 4-9

Right. View A shows time starting at the left end of the screen and moving to the right. The amplified signals representing surfaces that reflect the sound beam are displayed along the sweep line as vertical deflections. These vertical deflections are most commonly called pips, signals, or indications. The first pip received will be at the left side of the screen.

The first pip to appear on the screen is the initial pulse, also known as the "main bang" and/or the front surface reflection. In contact testing these are all the same but in immersion testing the initial pulse, or "main bang", occur at the transducer/water interface and the front surface reflection occurs at the water/test-part interface. Both are illustrated below.

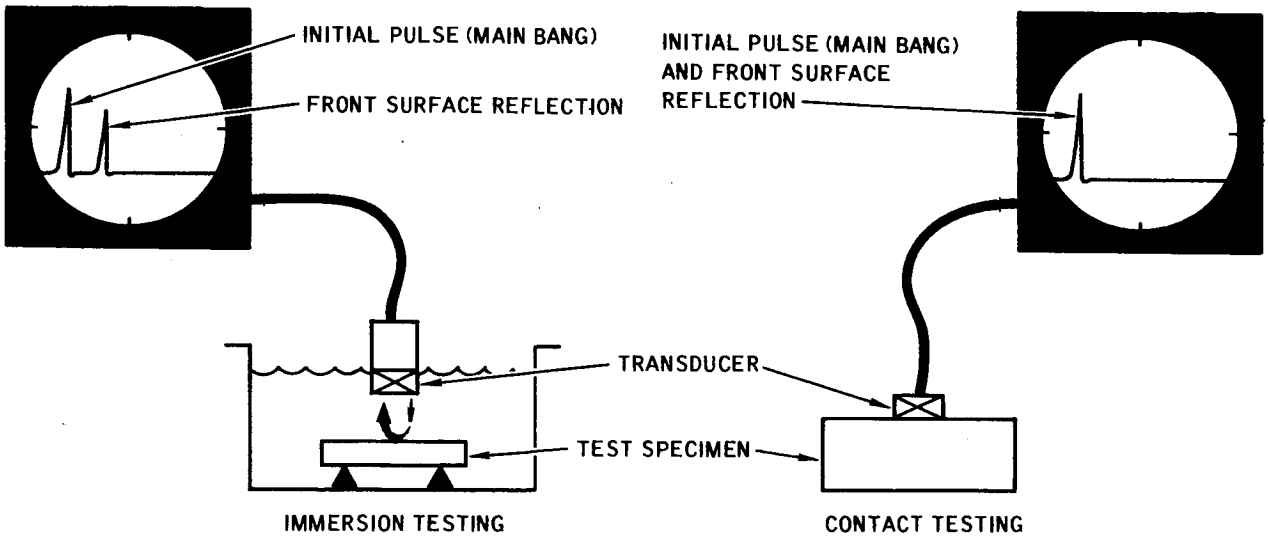

Would you say that the initial pulse represents the point in time where the ultrasonic test starts?

Yes . . . . . Page 4-10

No . . . . . Page 4-11

View B is the wrong answer. The sweep line represents time traveling from the left side of the CRT screen to the right side of the screen. View A shows time starting at the left side of the CRT screen and progressing to the right as you will see it when viewing the instrument.

Turn to page 4-8.

[redacted]

Glad you said yes. The initial pulse does represent the start of the test. At the beginning of this chapter we said that the electrical pulse from the pulser is sent simultaneously to the transducer and the receiver amplifier.

There will be an initial pulse pip on the screen even if the transducer is not touching anything, because the pulse is sent directly to the receiver amplifier as well as to the transducer. When the transducer is in contact with the test part (contact testing) or the water (immersion testing) the first reflection (from the part or the water) is immediate, so you can see that the initial pulse and the first reflection occur at the same time. However, in immersion testing we are not interested in the reflection at the water surface and as you will see later the sweep can be adjusted to move the initial pulse off the screen so that the front surface of the test part can be substituted as the starting point of the test.

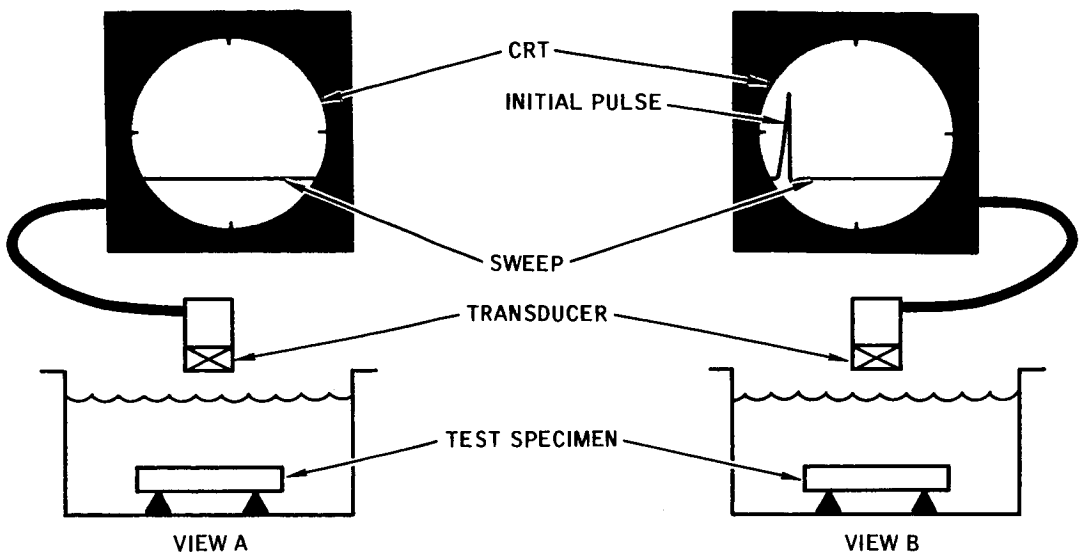

In which view is the CRT screen display correct?

View A . . . . . Page 4-12
View B . . . . . Page 4-13

From page 4-7

No is the wrong answer. The initial pulse does represent the point in time where the ultrasonic test begins. It is the first signal to be displayed on the CRT screen. This is so because the electrical pulse from the pulser is sent directly to the receiver amplifier at the same time it is sent to the transducer.

Turn to page 4-10.

From page 4-10

No, view A is incorrect. The CRT screen display in view A shows only the sweep. View B shows the sweep and the initial pulse. The initial pulse would be present, even though the transducer has not yet contacted the water, because the pulser sends the pulse directly to the receiver amplifier which in turn displays it on the CRT screen.

Turn to page 4-13.

[redacted])

Fine, view B is correct. You recognized that even though the transducer is not making contact the initial pulse pip will be present on the CRT screen.

In the frames to follow, most of the illustrations will be of contact testing but keep in mind that the principles are essentially the same for immersion testing.

In the illustration below a discontinuity-free block with parallel front and back surfaces is being tested. The first pip (A) on the CRT screen is the initial pulse or front surface reflection. Let's call it the front surface reflection because it is the part that we are really interested in. The second pip (B) along the sweep, in this case, represents the sound reflected from the back surface of the test part and is known as the first back reflection.

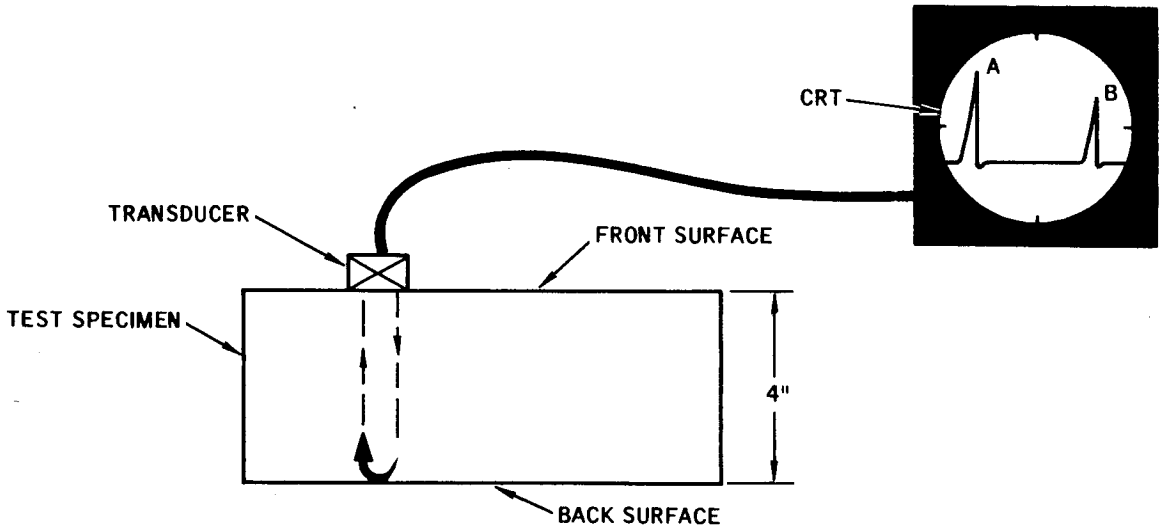

The thickness of the test part is four inches. Would you say that the distance between pip A and pip B represents four inches?

Yes . . . . . Page 4-14
No . . . . . Page 4-15

Certainly. The front and back surfaces of the test specimen are represented by pips A and B respectively so the space between them represents the thickness of the block, four inches.

You have just seen that the sweep line represents distance as well as time and in ultrasonic testing we are interested in the distance it represents to determine the location of reflecting surfaces (discontinuities) within the test specimen.

In the illustration below the transducer is placed on a reference block containing a 3/64-inch diameter artificial discontinuity at a metal distance of 2-1/4 inches. The transducer is placed on the center of the reference block so that maximum sound reflection will be received from the artificial discontinuity. The second pip on the CRT screen now represents the discontinuity and its position on the sweep line, in relation to the front and back surface pips, indicates the depth of the discontinuity in the block.

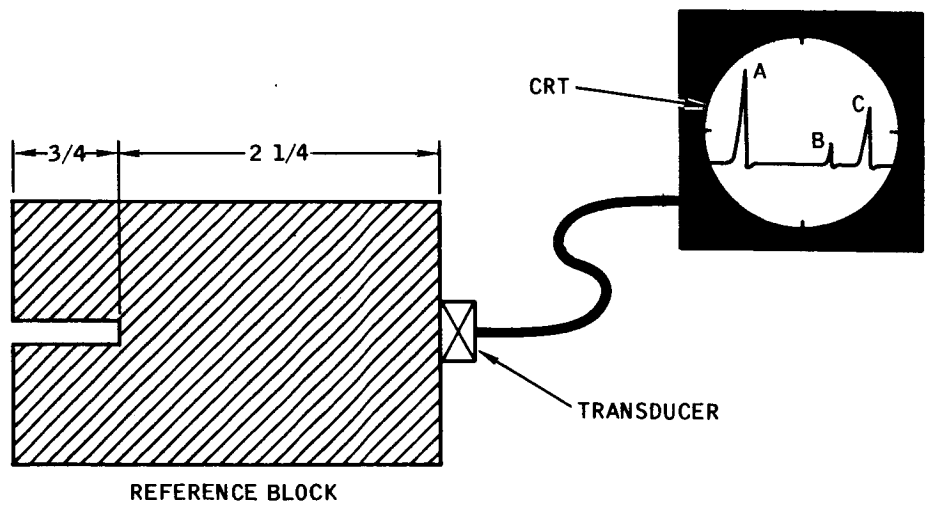

Which dimension of the reference block does the space between pips A and B represent?

3/4-inch dimension . . . . . Page 4-16
2-1/4 inch dimension . . . . . Page 4-17

Your no answer is incorrect. Let's take another look at the illustration. If pip A represents the front surface of the block and pip B represents the back surface of the block, the space between pips A and B must represent the space between the front and back surfaces of the block or the thickness of the block. In this case, four inches.

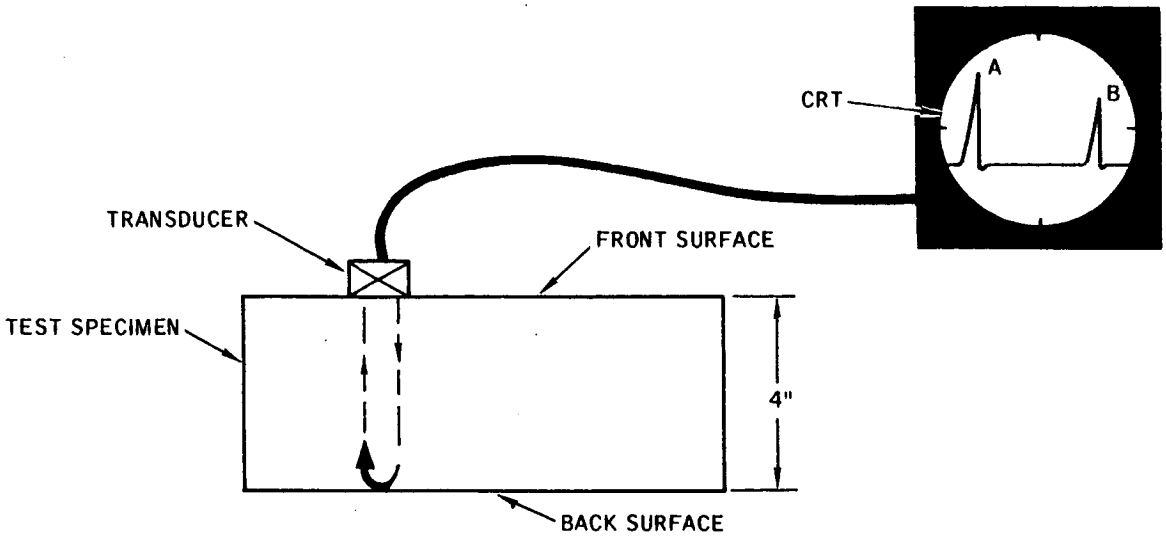

Turn to page 4-14.

From page 4-14

No, the 3/4-inch dimension is represented by the space between pips B and C, the distance from the discontinuity to the back surface of the block. The space between pips A and B represent the 2 1/4-inch dimension of the block.

Turn to page 4-17.

Exactly. The space between pips A and B represent the distance from the front surface of the block to the artificial discontinuity. In the block shown that dimension in 2 1/4 inches.

To aid in immediately determining the location of discontinuities within a test part, markers (also known as range markers or square wave markers) can be set into the CRT display just below the sweep line. Two types of markers are illustrated below. These markers can be expanded or compressed to fit the space between the front and back surface pips, dividing the space into convenient increments such as centimeters, inches, feet, etc.

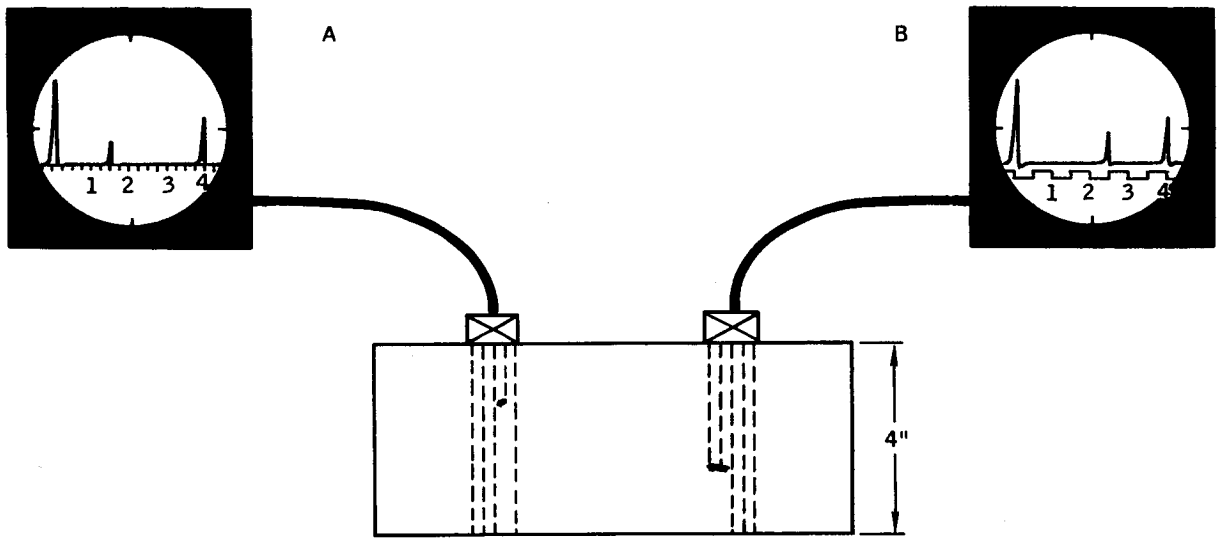

On CRT screen A the markers are adjusted to represent 1/4 inch. On CRT screen B each full square wave (⊓⊔) marker represents 1 inch. If the block were 6 inches thick the markers can be compressed (moved closer together) until the space between the front and back surface pips is divided into six equal spaces.

On CRT screen B how far is the discontinuity from the front surface?

1 1/2 inches . . . . . Page 4-18

2 1/2 inches . . . . . Page 4-19

From page 4-17

You must have looked at CRT screen A. It shows the discontinuity 1 1/2 inches below the front surface. CRT screen B shows the discontinuity 2 1/2 inches below the surface. Take another look at the illustration.

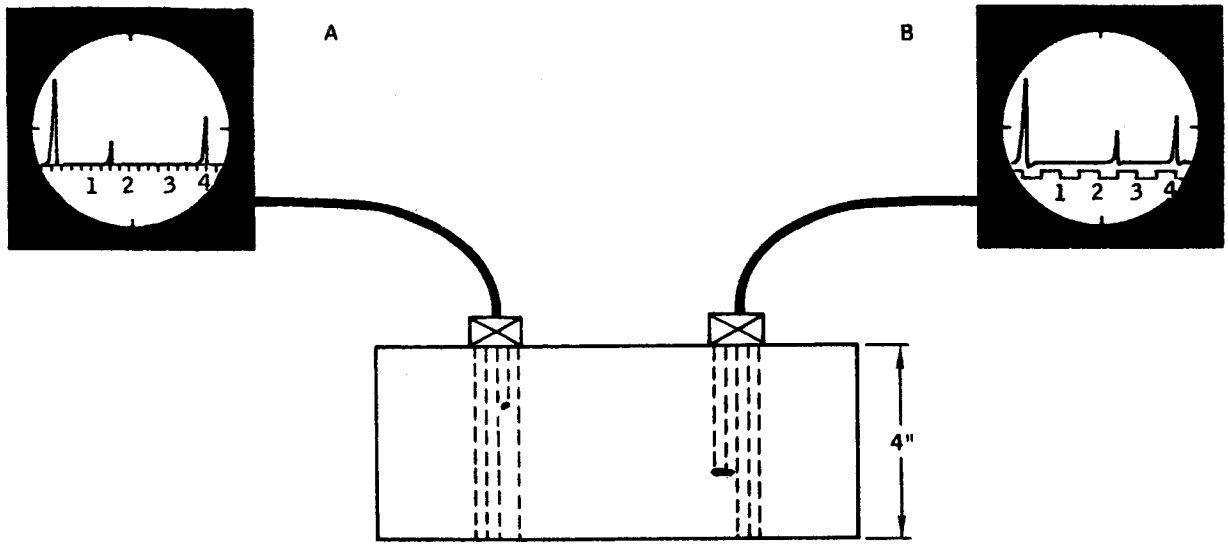

On screen B each full square wave (⊓⊔) represents one inch so each half wave represents one-half inch. There are two and a half square waves between the front surface pip and the discontinuity pip, therefore the discontinuity is 2 1/2 inches below the front surface.

Turn to page 4-19.

Right. CRT screen B shows the discontinuity 2 1/2 inches below the front surface. As you can see the markers make it much easier to estimate distances accurately.

Before we get back to the instrument controls let's talk about the amplitude (height) of the pip. At a given sensitivity (gain) setting the amplitude of the pip is determined by the strength of the signal generated by the reflecting sound wave. The larger the discontinuity, the more sound it reflects so it follows that the larger the discontinuity the higher (greater the amplitude) the pip. Thus the CRT screen displays two types of information: the depth of the discontinuity in the test part and relative size of the discontinuity.

Graphically expressed-

You learned in Chapter 2 of this volume that the size of a discontinuity is determined by comparing the sound reflected from it to the sound reflected from an artificial discontinuity of known size.

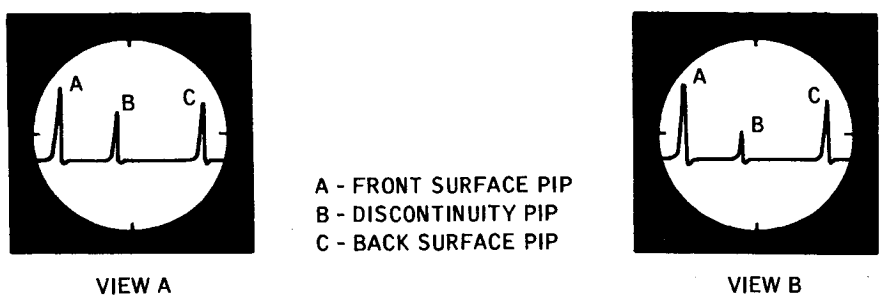

In views A and B pip B represents a discontinuity. In which view does pip B represent the larger discontinuity?

View A . . . . . Page 4-20

View B . . . . . Page 4-21

Right. The amplitude (height) of pip B is greater in view A, therefore the discontinuity causing it is greater. We are, of course, assuming that the discontinuities are at the same depth, in the same material and both have ideal reflecting surfaces.

Now let's get back to the instrument controls. We have already adjusted the sweep intensity (brightness). The other CRT display controls, like the intensity, will not need frequent changing. The other display controls are the vertical centering, horizontal centering, scale illumination, focus and astigmatism.

The screen scale consists of horizontal and vertical lines scribed on the CRT screen. A horizontal line approximately one third of the way up on the screen is usually designated zero. The lines above the zero line are numbered and spaced as the manufacturer sees fit.

The screen illumination control is often combined with the power switch. The screen illumination control determines the brightness of the scale lines. The brightness of the scale is largely a matter of personal choice.

Which of the following statements best describes the function of the scale illumination control?

The scale illumination control adjusts the brightness of the zero horizontal line on the CRT screen . . . . . Page 4-22

The scale illumination control adjusts the brightness of the horizontal and vertical lines scribed on the CRT screen . . . . . Page 4-23

From page 4-19

No, view B is the wrong choice. The amplitude (height) of pip B is greater in view A so the discontinuity causing it would be bigger. Remember, the more sound that is reflected from a discontinuity the higher the pip will be, and the larger the discontinuity the more sound it will reflect.

Turn to page 4-20.

From page 4-20

Your choice was not the best one. It is true that the scale illumination control adjusts the brightness of the zero line on the CRT screen but that is not the whole story. The screen illumination control adjusts the brightness of all the lines scribed on the screen.

Turn to page 4-23.

Right. The scale illumination control adjusts the brightness of all the horizontal and vertical lines scribed on the screen. These scribed lines are the scale. There are many variations of the scale configuration but all are for the purpose of dividing the CRT screen into convenient horizontal and vertical increments.

The vertical centering control raises and lowers the sweep line on the CRT screen. Usually the sweep line is adjusted to coincide with the zero line on the screen scale.

The horizontal centering control adjusts the starting point of the sweep on the CRT screen and as you know this is set to start the sweep line at the left edge of the screen.

Keep in mind that these are display controls which really means sweep line controls. They control the horizontal and vertical positioning of the sweep line on the CRT screen.

In both views below the sweep line needs adjusting. Which controls would you use to move the starting point of the sweep to the left edge of the screen in view A and to lower the sweep to the zero scale line in view B.

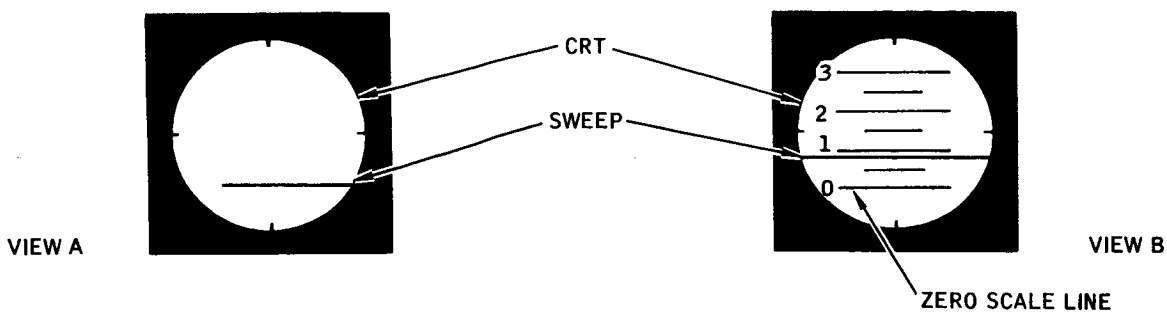

View A - Vertical centering control

View B - Horizontal centering control . . . . . Page 4-24

View A - Horizontal centering control

View B - Vertical centering control . . . . . Page 4-25

[redacted])

From page 4-23

Wrong answer. You have them reversed. The vertical control adjusts the vertical position of the sweep, that is, it adjusts the sweep line up or down on the CRT screen. The horizontal control adjusts the horizontal position of the sweep starting point, or in other words, moves the sweep line starting point to the left or right.

Turn to page 4-25.

[redacted])

Exactly right. The vertical centering control adjusts the sweep line up or down and the horizontal centering control adjusts the sweep line starting point to the left or right.

The focus and astigmatism controls adjust the sharpness of the sweep line. The focus control adjusts the focus of the CRT tube and the astigmatism control corrects any distortion caused by other adjustments.

So much for the display controls. Now let's get to the operating controls, the controls you will be using during each test.

The coarse and fine sensitivity or gain controls adjust the gain of the receiver amplifier, that is, they determine the amount the signals from the discontinuities are amplified. When a test requires finding comparatively large discontinuities in material of good acoustical properties less amplification is required than when small discontinuities are being sought in material of poor acoustical properties. It can also be said that this control adjusts the sensitivity of the instrument. Increasing the sensitivity (gain) increases the amplitude (height) of the pips on the CRT screen.

NORMAL CRT DISPLAY

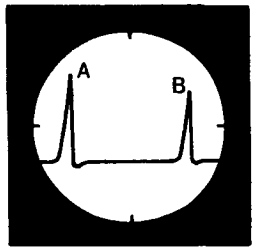

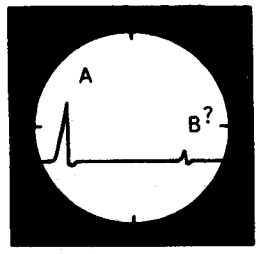

ABNORMAL CRT DISPLAY CAUSED BY IMPROPER SETTING OF SENSITIVITY CONTROL

A = INITIAL PULSE
B = FIRST BACK REFLECTION

Assuming a test specimen with parallel front and back surfaces, the first back reflection verifies that the sound reached the back surface and was reflected back to the transducer. A back reflection can be lost if the sensitivity (gain) control setting is too low. This will usually be accompanied by a less than full scale initial pulse. In the illustration above, to correct the abnormal condition you would...

decrease the sensitivity control setting . . . . . Page 4-26

increase the sensitivity control setting . . . . . Page 4-27

[redacted])

From page 4-25

You missed that one, better luck next time. Decreasing the gain would eventually leave you with only the sweep line on the screen. Increasing the gain will increase the amplitude of all the pips on the screen and also bring pips to the screen that are not visible at a low gain setting.

Turn to page 4-27.

[redacted]

From page 4-25

Right again, increasing the gain will increase the amplitude of all of the pips on the screen and also bring pips to the screen that are not visible at lower gain settings. It is possible that the initial pulse pip amplitude will be well above the limits of the screen before the first back reflection appears. When the pip reaches the limit of the screen it is said to have reached saturation. On some instruments when the amplitude of the pip reaches beyond the limits of the screen the top of the pip will be open. On other instruments the pip will be peaked.

Two controls, the "sweep delay" and "sweep length" regulate how much of the test part is displayed at one time on the CRT screen and what portion of the part is displayed. Again we have alternate names. Sweep delay is also known as range delay or just delay. The sweep length control is also called sweep control or range control.

The sweep length control simply expands or compresses the display on the CRT screen.

Turn to page 4-28.

From page 4-27

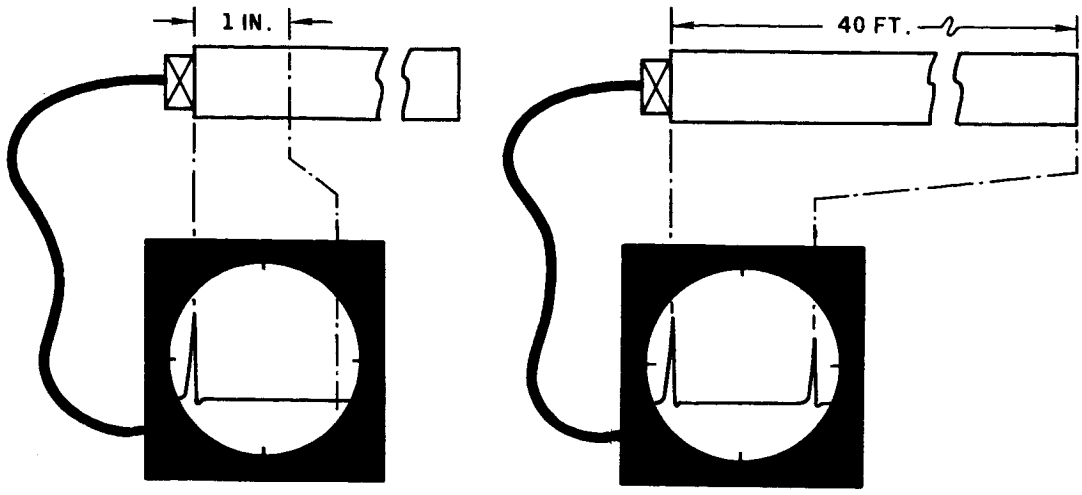

EXPANDED SWEEP
VIEW A

COMPRESSED SWEEP
VIEW B

View A illustrates the CRT screen expanded so that only pips from the first one inch of the part are displayed. This permits a more careful analysis of pips that are close together. In effect it magnifies a portion of the test part. View B shows the CRT screen compressed so that pips from the entire depth of the part will be visible on the screen at the same time. Increasing the sweep length control setting expands the sweep.

Does decreasing the sweep length control setting cause more or less of the test part to be displayed on the CRT screen?

More . . . . . Page 4-29
Less . . . . . Page 4-30

You are right. Decreasing the sweep length control compresses the sweep and we see a larger portion of the test part. Conversely, increasing the sweep length stretches the sweep out beyond the right edge of the screen and expands the section of the part remaining on the screen.

If you would like to see another explanation of the sweep length control, turn to page 4-30, then return to this page.

The sweep delay control makes it possible to start viewing the pips from the test part at a point beyond the front surface of the part. In effect it allows you to move the viewing screen along the depth of the test part. In immersion testing, for instance, the sweep delay is used to remove the initial pulse from the CRT screen as illustrated below. In view A the initial pulse and the water travel distance, in which we have no interest, takes up about half the screen. In view B the delay control has been used to move the initial pulse off the screen.

A - INITIAL PULSE
B - FRONT SURFACE PIP
C - 1ST BACK SURFACE REFLECTION PIP

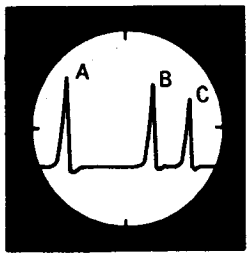

VIEW A

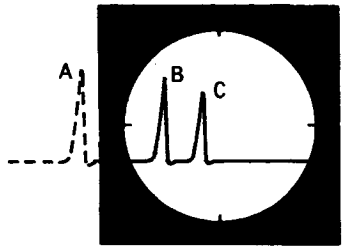

VIEW B

The sweep delay control permits you to see portions of the test part below the test surface and also allows you to choose the segment of the part you wish to examine. Also, in conjunction with the sweep length control the sweep delay makes it possible to examine just a small section of the test part with the entire width of the screen.

Turn to page 4-31.

No, decreasing the sweep length will cause more of the test part to be displayed on the CRT screen. Keep in mind that the sweep line between the front surface pip and the first back reflection pip represents the entire depth of the part. When the sweep length control is at its lowest setting the entire depth of the part is displayed on the CRT screen between the front surface pip and the back surface pip. In fact, at this setting, the space between the front and back surface pips will be less than full screen width.

To further explain the sweep length control, in the illustration below the frame represents the CRT screen and the strip of rubber represents the sweep. The strip of rubber is marked at a number of points to represent sections of the test part and one end of the rubber is attached to the left side of the frame. With the rubber strip attached as shown, we see a number of marks in the framed length of rubber. If we pull on the end of the rubber strip and stretch it to the right, we will see fewer of the strip's marks through the frame. If we compare this to the cathode ray tube display, we see a smaller portion of the test part when we stretch or expand the sweep, and a larger portion of the part when we compress the sweep.

The rubber strip remains fixed at the left side of the frame because it is attached there; therefore, only the rubber strip to the right of the attached point will stretch or move. The same applies to the sweep.

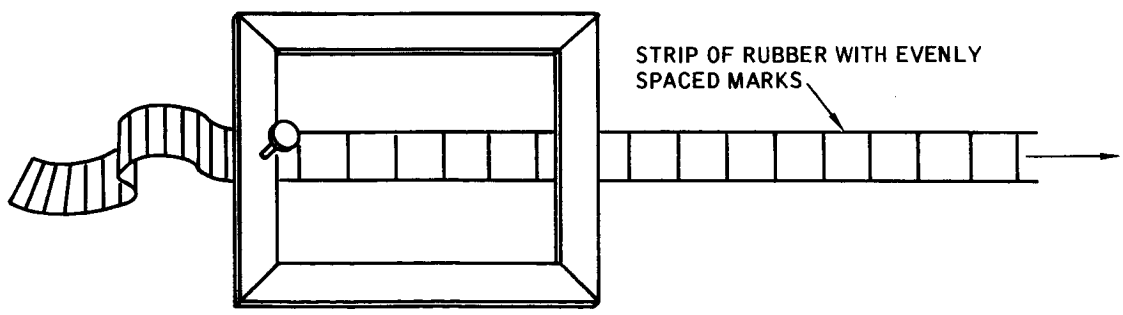

Turn to page 4-29.

From page 4-29

The expansion or compression of the sweep with the sweep length control is toward or away from the left side of the screen. For example, in the illustration below if the sweep delay is set so that the start of the display is at A and the sweep length is set to display only section A to B on the screen, as shown in CRT view A; then when the sweep length is compressed it will include the area from A to C but not the area from A to D, as shown in CRT view B.

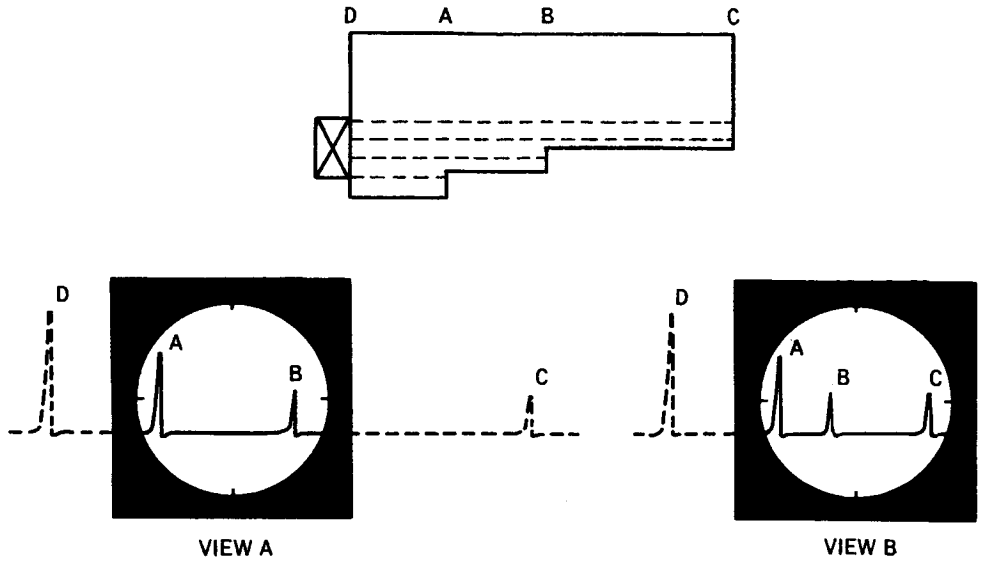

Now look at view B. Which control would you use to get the front surface pip on the screen?

Sweep length control . . . . . Page 4-32

Sweep delay control . . . . . Page 4-33

[redacted]

From page 4-31

No, changing the sweep length control won't do it. Remember we said that expansion and compression of the CRT screen by the sweep length control is always from or toward the left end of the screen. In this case the left end of the screen is at A; established there by the sweep delay control. The sweep delay permits you to choose the starting point of the test, so to start the test at the front surface (to get the front surface pip back on the screen) the delay control will have to be used.

Turn to page 4-33.

Fine, rotating the sweep delay control will bring the front surface pip back to the CRT screen because the sweep delay control permits you to choose the starting point (within the test part) of the test.

When the delay control is rotated to return the front surface pip to the screen the back surface pip (C) will be lost from the screen as shown in view A.

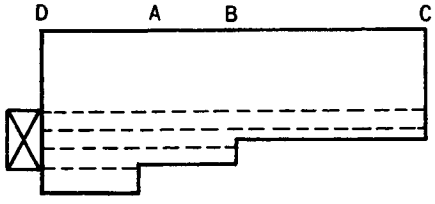

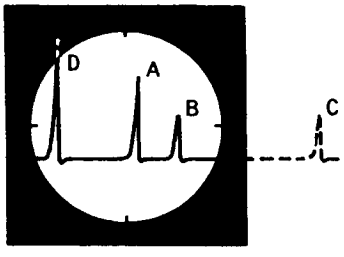

VIEW A

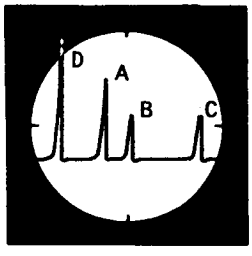

VIEW B

Would you increase or decrease the sweep length control setting to bring the back surface pip (C) onto the screen as shown in view B.

Increase the sweep length . . . . . Page 4-34

Decrease the sweep length. . . . . Page 4-35

From page 4-33

No, sorry, you missed that one. To end up with the entire test part represented on the CRT screen you must decrease the sweep length.

To increase the amount of material shown within the CRT screen the sweep length must be compressed (decreased). In view A the sweep, in effect, extends from D to C but we can only see the portion that is on the screen. To get it all on the screen then we must compress (shorten) or decrease the sweep length until it fits on the screen.

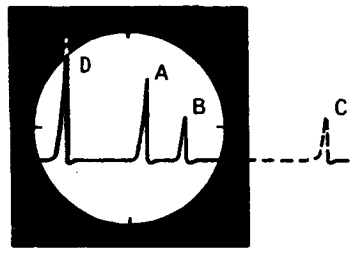

VIEW A

Turn to page 4-34.

From page 4-33

Exactly right. To bring the back surface pip (C) into the picture the sweep must be compressed and to do this the sweep length control setting is decreased.

The pulse repetition rate control regulates how often the pulse is applied. Pulse rates vary from 50 to 1200 pulses per second (pps) or more. High pulse rates are required to keep the sweep line bright. When the sweep length is short, a shorter time is required for the sweep so more pulses per second can be transmitted. When the sweep length is long, the pulse rate must be lower to allow enough time for the sweep to be displayed before another pulse is transmitted. In most later instruments the pulse rate is automatically adjusted by the instrument for maximum brilliance of display and compatibility with the test being made.

Assume an instrument has a manual pulse repetition rate control. If you were testing thin material, say from 1 to 1 1/2 inches thick, would you use a low pulse repetition rate or a high pulse repetition rate?

Low PRR . . . . . Page 4-36

High PRR . . . . . Page 4-37

From page 4-35

Low pulse repetition rate (PRR) is the wrong choice. A low pulse rate is required only when the sweep length is long. In thin material the sweep length is short because the distance between the front and back surfaces of the test part is short. It follows then that only a short time is required between pulses, so a high pulse repetition rate is the better choice.

Turn to page 4-37.

[redacted]

Right. When testing thin material a high pulse repetition rate is the better choice. In thin material the sweep length is short so the time required between pulses is short. A high pulse repetition rate is especially desirable in automatic scanning because the limit of the scanning rate depends considerably upon the pulse repetition rate.

The pulse length control regulates how long the pulse is applied. Increasing the pulse length increases the amount of sound energy (strength of the sound) applied to the test part but decreases the resolving power of the equipment. Best resolution is obtained with the shortest possible pulse. However, pulse length must be increased to obtain deep penetration or to penetrate coarse grained materials. Pulse length is alternately called pulse width.

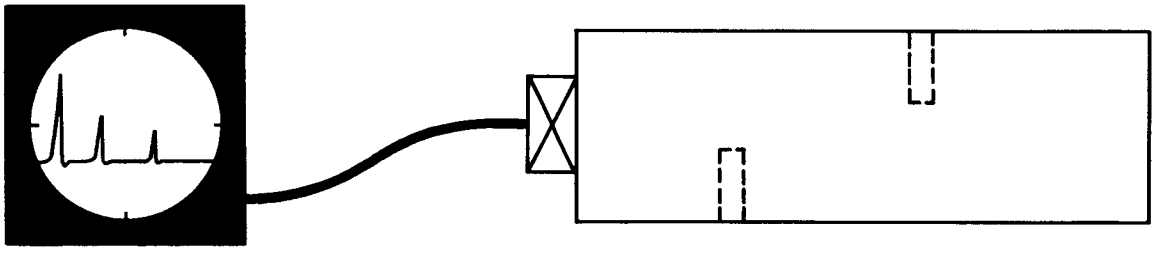

In the illustration above a front surface pip and pips from holes drilled in each side of the test part are received on the CRT screen but no back surface pip is received. It is possible that the sound wave is not strong enough to reach the back surface of the part before it is attenuated. In an effort to remedy this condition would you increase or decrease the pulse length?

Increase the pulse length . . . . . Page 4-38

Decrease the pulse length . . . . . Page 4-39

[redacted])

Right. Increasing the pulse length increases the amount of sound energy applied to the test part and the stronger the sound wave the deeper it will penetrate the part.

A reject control (also called clipping control or zero compress control) eliminates grass or very low amplitude pips along the sweep line such as those caused by surface noise or large grain structure. While eliminating the unwanted low amplitude pips from the CRT screen the reject control reduces the size of all the pips on the screen the same amount. This results in a cleaner sweep line which simplifies observing the more meaningful pips. However, the reject control distorts the linearity of the instrument and it must be kept in mind that even small pips can be important when interpreting the CRT display. The views below illustrate the CRT screen before and after use of the reject control. Note that the amplitude of the pips that remain has been reduced by the same amount as the grass.

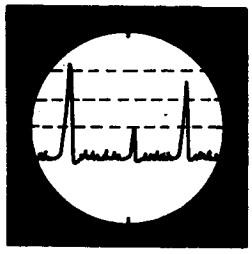

BEFORE REJECT

VIEW A

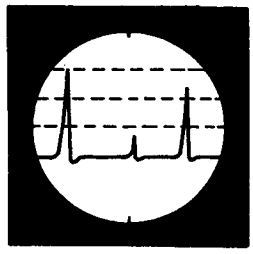

AFTER REJECT

VIEW B

If you wished to compare the discontinuity pip in view B to a standard reference block discontinuity, would you use the same reject control setting when checking the reference block or turn the reject control off when checking the reference block?

Use the same reject control setting . . . . . Page 4-40

Turn the reject control off . . . . . Page 4-41

From page 4-37

No, decreasing the pulse length would not help because decreasing the pulse length reduces the strength of the sound wave. Under the conditions stated more sound energy is needed to increase the strength of the sound wave so that it can penetrate deeper into the part, strike the back surface, and return a signal (pip) to the CRT screen. Increasing the pulse length increases the strength of the sound wave.

Turn to page 4-38.

[redacted])

From page 4-38

Right. When comparing a true discontinuity to an artificial discontinuity you would use the same reject control setting. In view B part of the discontinuity pip has been clipped off so to make a valid comparison the same amount must be clipped off the artificial discontinuity pip.

Flaw-alarm/gating circuits are used to establish zones along the sweep line within which pips of predetermined amplitude will activate either an alarm or a recording system (C-Scan). Keep in mind that the sweep between the front surface pip and the back surface pip represents the depth of the part being tested so dividing the sweep into zones is the same as dividing the depth of the part into zones. The gated section is displayed as a squared depression in the sweep line as shown in the illustration below.

Gating/flaw-alarm circuits usually have three basic controls. The gate delay control positions the start of the gate (much the same as the sweep delay positions the start of the sweep). The gate width control positions the end of the gate, thereby controlling the width of the gate, and the alarm sensitivity control determines the pip amplitude, within the gate, at which the alarm or recorder will be initiated.

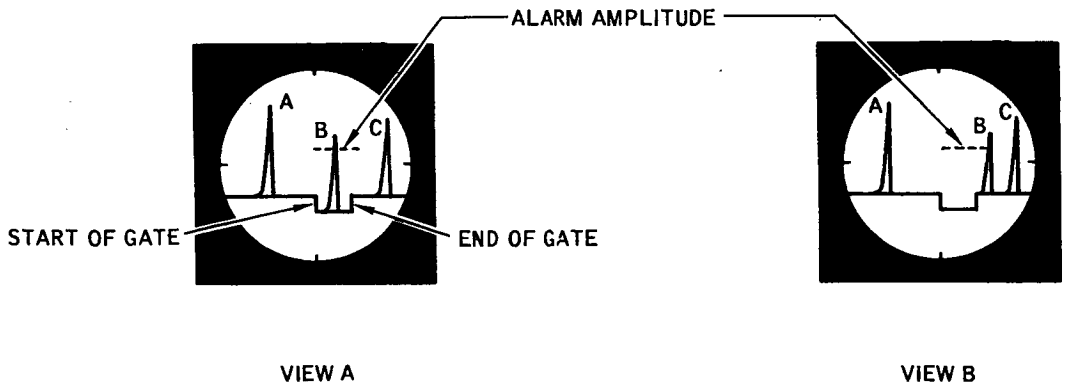

In view A pip B will set off the alarm. In view B will pip B set off the alarm?

Yes . . . . . Page 4-42

No . . . . . Page 4-43

From page 4-38

You said, "turn the reject control off". If you turned off the reject control before you checked the artificial discontinuity in the reference block you would not have a valid comparison. The reject control clips part of the true discontinuity pip off so its amplitude (height) is not a true representation of the discontinuity size. When comparing the true discontinuity to the artificial discontinuity you are comparing pip amplitudes (heights); so to get a valid comparison you must clip off the same amount (use the same reject control setting) from the artificial discontinuity pip. It would of course be alright to compare the true and artificial discontinuity pip amplitudes with the reject control turned off for both. The important point is that the reject control setting be the same when checking both the true and artificial discontinuities.

Turn to page 4-40.

You said yes, pip B in view B would set off the alarm. Well you are on the wrong track so let's take another look.

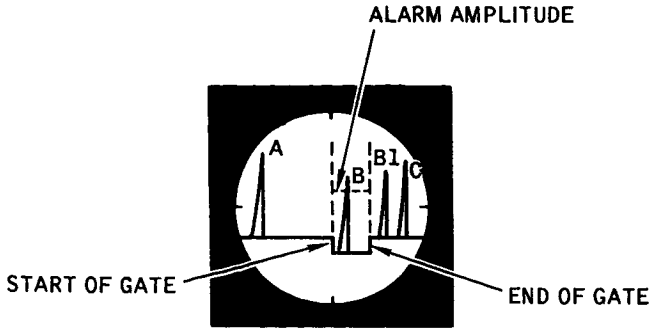

A - FRONT SURFACE PIP
B - DISCONTINUITY PIP
B1 - DISCONTINUITY PIP
C - BACK SURFACE PIP

This time in the illustration the limits of the gate are extended vertically on the screen to more effectively represent the corridor within which a pip whose amplitude exceeds the alarm sensitivity setting amplitude (alarm amplitude) will set off the alarm. Pip B is within that corridor and its amplitude exceeds the alarm amplitude so it will set off the alarm. The amplitude of pip B1 is sufficient to set off the alarm but it is not within the gate corridor so it will <u>not</u> set off the alarm.

Turn to page 4-43.

[redacted]

From page 4-40

Fine, pip B in view B will not set off the alarm because it is not within the limits of the gate. Multiply gates are provided, each with its own independent delay, width and alarm sensitivity controls. Gate controls can be adjusted without disturbing other instrument settings.

As you know, in ultrasonic testing the amplitude of the pip from a discontinuity of a given size decreases as the depth of the discontinuity in the part increases, because of attenuation. To compensate for this attenuation an electronic control has been devised. TCG (Time Corrected Gain), STC (Sensitivity Time Control) and DAC (Distance Amplitude Correction) are three ways of saying the same thing, and there are others. DAC (Distance Amplitude Correction) best describes the control's function. The DAC control electronically compensates for the attenuation of sound as it penetrates deeper into the test part. DAC amplifies the signals from discontinuities deep in the part more than those from discontinuities closer to the surface so that the pip from (for example) a 5/64-inch discontinuity three inches below the surface will be of the same amplitude as the pip from a 5/64-inch discontinuity one inch below the surface.

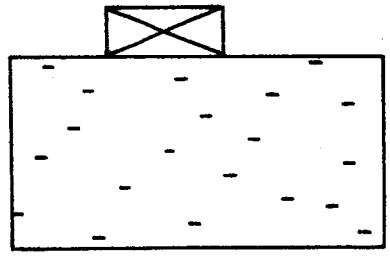

In the above illustration several 1/16-inch discontinuities are scattered throughout the part. All are flat and parallel to the top surface.

With the DAC control in operation would the amplitude of the pips from these discontinuities be the same or different?

The same . . . . . Page 4-44

Different . . . . . Page 4-45

[redacted]

From page 4-43

Right again. The amplitude of the pips from all the discontinuities will be the same because the discontinuities are all the same size and the DAC (Distance Amplitude Correction) control compensates for the difference in depth.

DAC is most useful when used in conjunction with the flaw alarm. After the distance amplitude correction is made the flaw alarm sensitivity can then be set at a pip amplitude that represents a given size discontinuity at any depth in the part. Without DAC the pip amplitude setting required to trigger the alarm for a 5/64-inch discontinuity three inches below the surface would trigger the alarm for a far smaller discontinuity one inch below the surface.

Turn to page 4-46.

[redacted])

You missed that one. You said that with the DAC control in operation the amplitude of the pips from the 1/16-inch discontinuities in the part would be different. This would be true without DAC (Distance Amplitude Correction) because all the discontinuities are at different depths. But the DAC control compensates electronically for the difference in depth, so since all the discontinuities are the same size the amplitude of all the pips will be the same.

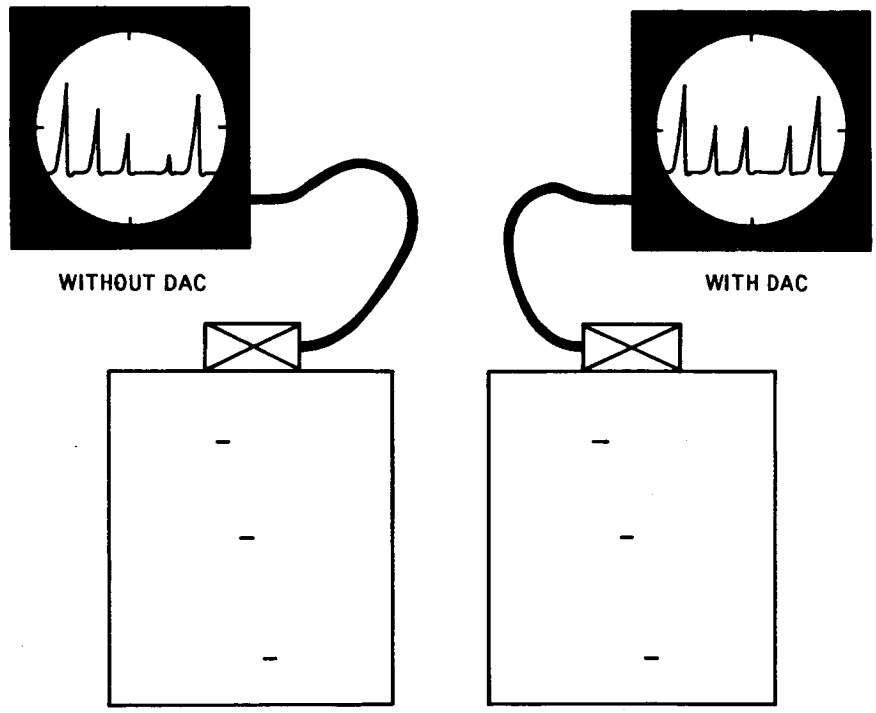

The views above illustrate the CRT display with and without DAC for the same discontinuity arrangement.

Turn to page 4-44.

[redacted])

You are now familiar with the operation of the instrument controls and you know about transducers and standard reference blocks. But before an ultrasonic testing system is ready for use it must be standardized.

Standardizing, briefly, is noting the response of the system to known standards (standard reference blocks). In other words, standardizing establishes a response (pip height) standard to discontinuities at varying depths, in a given material, to compare later test results to. During the standardization procedure a sensitivity setting, at which all discontinuities of a certain size will be detected, is also established for the material being tested. The standardization procedure will be discussed in detail in volume III.

If you changed the transducer do you think it would be necessary to standardize again?

Yes . . . . . Page 4-47

No . . . . . Page 4-48

You are right. It would be necessary to standardize the system again if the transducer were changed because transducer sensitivities vary which could result in considerably different responses from the reference blocks. In fact, when any component of the testing system is replaced the system must be standardized before proceeding with the test.

Ultrasonic testing systems are also frequently standardized for other reasons, such as: whenever a different type of material is to be tested and before starting any test after the equipment has been shut down since the last standardization.

Turn to page 4-49 for a review.

From page 4-46

You chose the wrong answer. You said you didn't think it would be necessary to standardize the test system again after changing the transducer. Think back a minute about what you learned about transducers. Remember you learned that even transducers of the same frequency, size and material do not always generate identical pips on the CRT. That is why it would be necessary to standardize the system again; to verify that the responses from the reference blocks did not change, or to note the change.

Turn to page 4-47.

From page 4-47

1. The CRT screen display of the pulse-echo instrument is an _____ -scan.

12. distance

13. The distance between the front surface pip and a discontinuity pip represents the distance between the test surface and the dis _____.

24. less

25. Increasing the sweep length control setting (expands, compresses) _____ the sweep.

36. shortest

37. The reject control eliminates very low ampl _____ pips along the sweep for easier viewing.

1. A

2. Soon after the pulse-echo instrument power switch is turned on a line of light appears across the CRT screen. This line is called the sw_____ line.

13. discontinuity

14. To aid in quickly determining the location of discontinuities in a test specimen, mar_____ can be set into the CRT display.

25. expands

26. The sweep delay control moves (delays) the star_____ point of the CRT display.

37. amplitude

38. The reject control reduces all the pips on the CRT screen (equally, unequally) _____ .

[redacted]

2. sweep

3. The intensity control of an ultrasonic test instrument regulates the brightness of the CRT sw_____ li_____.

14. Markers

15. These markers can be exp_____ and cont_____ to fit the distance between the front and back surface pips.

26. starting

27. The sweep delay permits expanded viewing of segments of a specimen beyond the fr_____ surface.

38. equally

39. In the flaw-alarm/gating circuits, the gate delay control positions the sta_____ of the gate.

[redacted])

3. sweep line

4. The sweep line of the CRT represents time moving from (left, right) _____ to (left, right) _____.

15. expanded, contracted

16. The amplitude (height) of a pip on the CRT screen indicates the relative s_____ of the discontinuity.

27. front

28. In conjunction with the sw_____ len_____ control the sweep delay makes it possible to view just a small segment of the test specimen with the entire width of the CRT screen.

39. start

40. The gate width control positions the e_____ of the gate.

4. left, right

5. Vertical deflections of the sweep line (pips) represent sur_____ that reflect sound.

16. size

17. The brightness of the CRT scale is controlled by the sc_____ illumination control.

28. sweep length

29. The expansion or compression of the sweep with the sweep length control is toward or away from the (left) (right) _____ side of the CRT screen.

40. end

41. The alarm sensitivity control determines the pip ampl_____ at which the alarm or recorder will be triggered.

5. surfaces

6. The first pip to appear on the screen is the ini_____ pu_____.

17. scale

18. The vertical centering control of an ultrasonic instrument ra_____ and lo_____ the sweep line on the CRT screen.

29. left

30. In immersion testing the sweep (length, delay) _____ control is used to move the initial pulse off the CRT screen.

41. amplitude

42. More than one area of the sweep (can)(cannot) _____ be gated at the same time.

6. initial pulse

7. The initial pulse represents the point in time where the ultrasonic test st_____.

18. raises, lowers

19. The horizontal centering control adjusts the sta_____ point of the sweep line on the CRT.

30. delay

31. The pulse repetition rate (PRR) control regulates how often the pu_____ is applied.

42. can

43. When more than one area of the sweep is gated the alarm sensitivity settings (must be alike)(can be different) _____.

[redacted])

7. starts

8. In contact testing the initial pulse, main ba_____ and front sur_____ reflection are all represented by the same pip.

19. starting

20. The focus and astigmatism controls of the instrument adjust the shar_____ of the sweep line.

31. pulse

32. Since the sound energy from one pulse must have time to return to the transducer before the next pulse starts, the thi_____ of the test specimen is a governing factor.

43. can be different

44. The DAC (distance amplitude correction) compensates for the atten_____ of sound as it travels deeper into the specimen.

8. bang, surface

9. In immersion testing the first pip represents only the initial pulse and the (main bang, front surface reflection) _____ _____ _____.

20. sharpness

21. The sensitivity or gain control adjusts the gain of the rec_____ amp_____.

32. thickness

33. The pulse len_____ control regulates how long the pulse is applied.

44. attenuation

45. With the DAC control properly set the pip amplitude from a 3/64-inch flat-bottom hole two inches below the surface will be (the same size as) (twice the size of) _____ a 3/64-inch flat-bottom hole one inch below the surface.

9. main bang

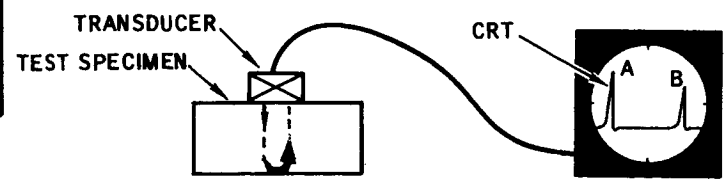

10. In the accompanying illustration pip B represents the ba_____ surface reflection.

21. receiver amplifier

22. Increasing the sensitivity control (increases, decreases) _____ the amplitude (height) of the pips of the CRT screen.

33. length

34. Increasing the pulse length increases the amount of sou_____ en_____ applied to the test specimen.

45. the same size as

46. Standardizing a pulse-echo instrument system means noting its response to known stan_____ .

10. back

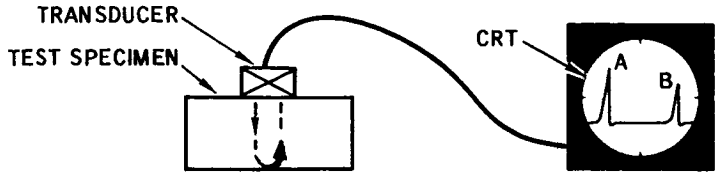

11. The distance between pips A and B represent the thi _____ of the test specimen.

22. increases

23. The sweep length control exp _____ and comp _____ the display on the CRT screen.

34. sound energy

35. To penetrate coarse grained materials or deep specimen the pulse length (width) must be (increased, decreased) _____ .

46. standards

47. The testing system must be standardized whenever a different kind of ma _____ is to be tested and whenever any comp _____ of the test system is replaced.

11. thickness

12. The sweep line represents time but in ultrasonic testing it also represents dis_____.

Return to page 4-49, frame 13.

23. expands, compresses

24. Expanding the sweep length causes (more, less) _____ of the test specimen to be displayed on the CRT screen.

Return to page 4-49, frame 25.

35. increased

36. Best test system resolution is obtained with the (shortest, longest) _____ usable pulse length.

Return to page 4-49, frame 37.

47. material, component

Turn to page 4-61.

From page 4-60

RESONANCE INSTRUMENTS

Resonance ultrasonic test equipment uses a variable frequency oscillator to excite the transducer which causes it to vibrate over a range of frequencies. The ultrasonic vibrations generated by the transducer are transmitted to the specimen in continuous longitudinal waves.

As you know from Volume I, when a continuous beam of ultrasonic energy is transmitted into a specimen and reflected in phase with the incoming energy, resonance occurs. When resonance occurs standing waves are set up within the specimen and the specimen vibrates with considerable increase in amplitude. This increase in vibration amplitude (resonant condition) in the specimen causes a load change on the oscillator which is indicated on the display system. Since there are several types of ultrasonic resonance testing equipment, the display may be a sweep deflection on a CRT screen, an audible tone, a meter deflection, or a flashing neon indicator. The greatest accuracy is usually obtained with the CRT display.

Each thickness of a given material has a fundamental resonant frequency at which one half a wavelength is equal to the thickness of the material. Resonance also occurs at whole number multiples (harmonics) of the fundamental frequency.

In resonance testing both the fundamental and harmonic resonance frequencies will be used, but it is the fundamental frequency of the material that determines the thickness. It is important to know, therefore, that the difference between any two adjacent harmonic frequencies equals the fundamental frequency.

In resonance testing, then, we are looking for the resonant frequencies (fundamental or harmonic) of the test specimen. This is done by varying the frequency of the sound waves applied to the specimen until resonance is indicated by the instrument display system. The frequency setting at which resonance occurs is the resonant frequency of the specimen. On the simpler resonance instruments the frequency of the sound waves is varied with a manual control. On the later and larger instruments frequency variation is automatic throughout a given range of frequencies.

Turn to page 4-62.

From page 4-61

When using the simpler resonance equipment the thickness of the specimen will have to be calculated with the formula - $T = V/2F$ where T is the thickness of the specimen, V is the longitudinal velocity of sound in the test specimen (a known quantity) and F is the fundamental frequency of the specimen determined by the test. On many of the later resonance instruments the display is a direct readout of the specimen thickness. On others the instrument display must be interpreted with conversion charts. Still other conversion charts simplify the calculations previously mentioned.

Shown below is a schematic diagram of a typical resonance system that is manually tuned.

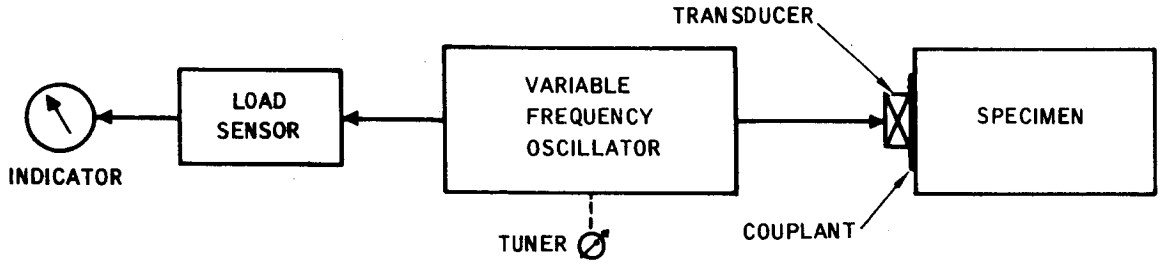

On the next page a schematic diagram of a typical resonance testing system with a CRT display is illustrated.

Turn to page 4-63.

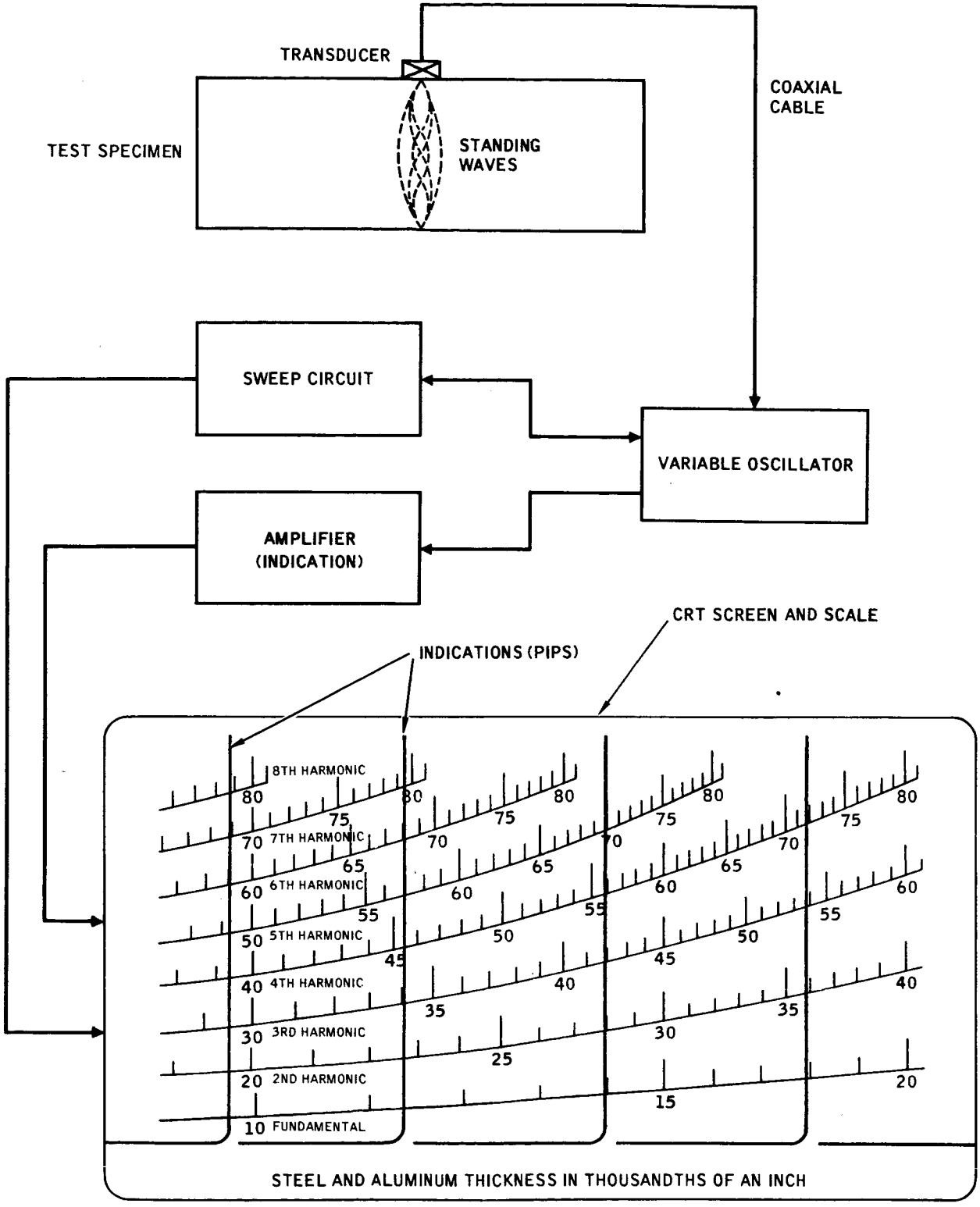

ULTRASONIC RESONANCE TESTER - SCHEMATIC

Turn to page 4-64.

Illustrated below is a direct readout, CRT display type resonance tester. This type of resonance tester uses precalibrated transparent scales that are placed in front of the CRT screen. The thickness of the specimen is read from these scales. The pips (sweep line displacements) on the CRT indicate the points of resonance (fundamental and/or harmonic) and the thickness of the specimen is read at these points on the scale.

Each scale covers just a small thickness range for certain materials. The thickness range and the material is noted on the scale. It is assumed that the kind of material and approximate thickness of the test specimen is known, and the appropriate scale is chosen accordingly.

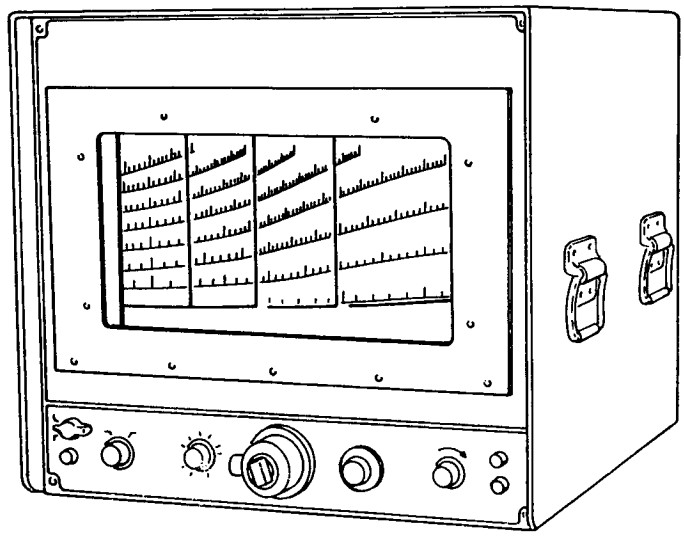

When using the type of resonance tester shown above, the thickness of the test specimen is read directly from which of the following?

CRT screen . . . . . Page 4-65

Precalibrated scale . . . . . Page 4-66

[redacted]

You said that on the resonance tester illustrated the specimen thickness is read directly from the CRT screen. Well not quite. The pips on the CRT screen indicate where to read the thickness of the specimen but the thickness is read directly from the precalibrated scale. The purpose of the precalibrated scales is to provide a direct readout of the specimen thickness, eliminating the need for calculation or tables. As their name implies, they are precalibrated (or you might say precalculated) to read the thickness of the specimen at the point where the CRT pips (vertical resonance lines) intersect the horizontal lines of the scale.

Turn to page 4-66.

[redacted]

From page 4-64

Right, on the instrument illustrated the thickness of the specimen is read directly from the precalibrated scale at the point(s) where the CRT pip(s) (vertical resonance line(s) intersect the horizontal scale lines.

This type of resonance tester also uses interchangeable plug-in oscillators of various frequency ranges. In addition to the material and thickness information, the precalibrated scales are also marked to indicate the oscillator range, transducer, coax cable and instrument settings for which the scale was calibrated. In other words the precalibrated scale directs the set up of the test. The choice of scale is determined by the material and approximate thickness of the test specimen. Remember in resonance testing we are searching for the fundamental resonant frequency of the test specimen and to find it we use an oscillator and a transducer with a frequency range that includes the resonant frequency of the specimen. The precalibrated scales provide this information and the instrument sweeps the frequency range chosen automatically. As the oscillator sweeps through the resonant frequencies (fundamental and/or harmonic) of the specimen, vertical pips appear on the CRT. The thickness of the specimen is indicated by two or more successive pips intersecting adjacent scale lines at the same calibrated value.

Turn to page 4-67.

For example on the scale illustrated in view A the thickness of the specimen is 0.532 inch.

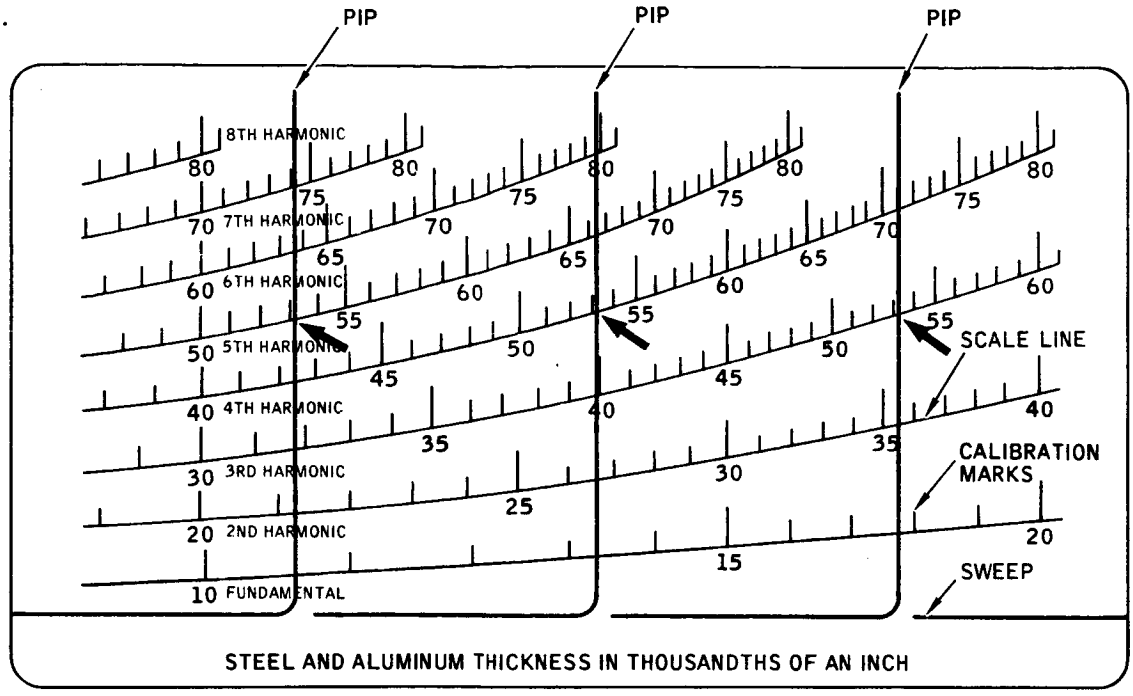

VIEW A

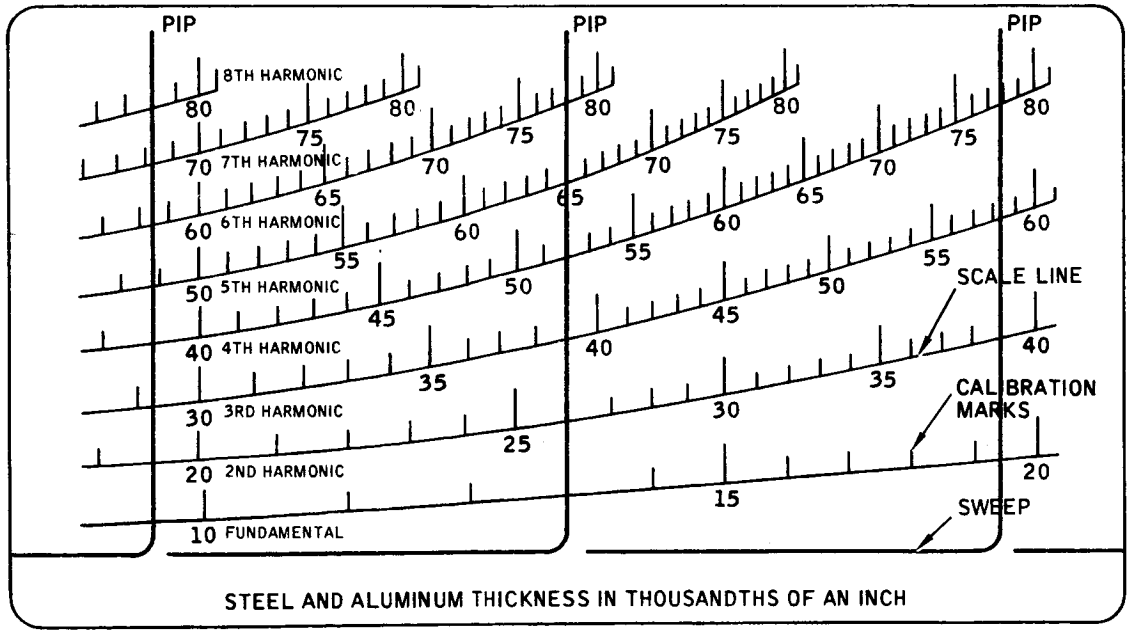

VIEW B

Now in view B is the thickness of the specimen 0.052 inch or 0.039 inch?

0.052 inch. . . . . Page 4-68

0.039 inch. . . . . Page 4-69

You say that the scale shown in view B indicates that the specimen is 0.052 inch thick. Your answer is incorrect. Only one pip intersects the 0.052 calibration mark. The thickness of a specimen is indicated by two or more pips in a row intersecting adjacent scale lines (harmonic lines) at the same calibrated value. In view B, repeated below, the first pip intersects the fourth harmonic scale line at the 39 calibration mark, the second pip intersects the third harmonic line at the 39 calibration mark, and the third pip intersects the second harmonic line at the 39 calibration mark. All of the above conditions have been met; three successive pips intersect three adjacent scale lines at the same calibrated value - 39. Since the scale is calibrated in thousandths of an inch, the thickness of the specimen is 0.039 inch.

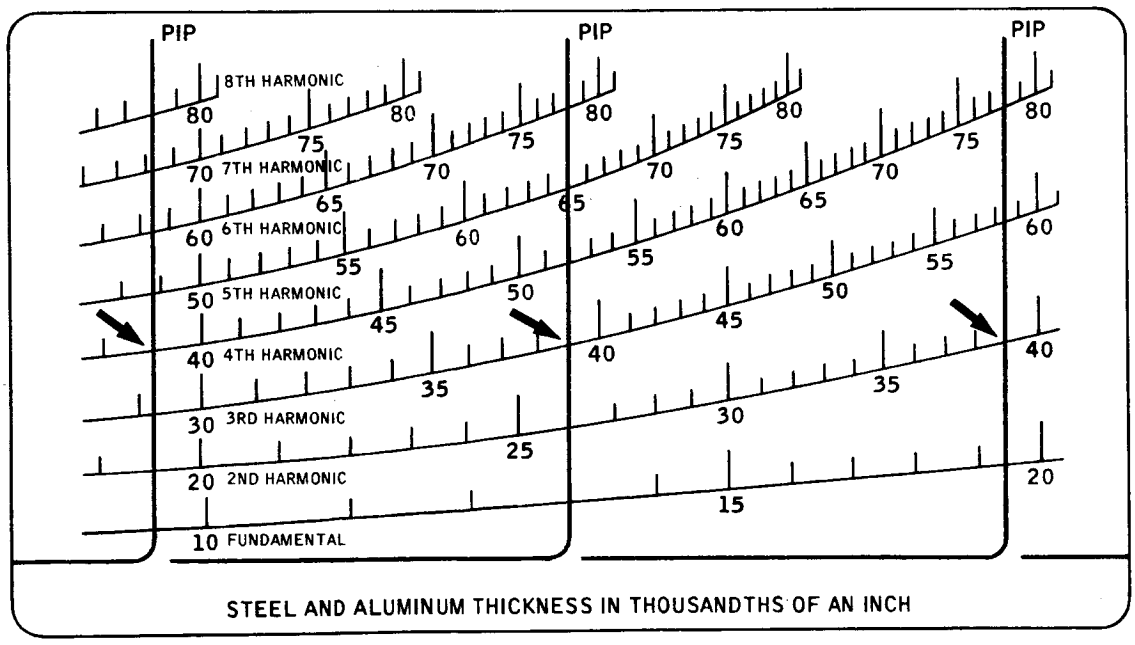

VIEW B

Turn to page 4-69.

Right. The display in view B indicates that the thickness of the specimen is 0.039 inch. Three successive pips intersect three adjacent scale lines (harmonic lines) at the same calibration value - 39. The scale is calibrated in thousandths of an inch so the thickness of the specimen is 0.039 inch.

Now let's have a look at the instrument controls. Since this is a direct reading instrument and the frequency variation is automatic, most of the controls are used to set up the test and the actual measuring is automatic.

A brightness control, either a screwdriver adjustment or coupled with the ON-OFF switch, adjusts the brightness of the sweep line on the CRT. It does not affect the brightness of the scale. The scale is illuminated when the power switch is turned on.

Select the correct statement.

The brightness control adjusts the brightness of the CRT sweep line . . . Page 4-70
The brightness control adjusts the scale illumination . . . . . Page 4-71

You selected the correct statement. The brightness control adjusts the brightness of the CRT sweep line. The brightness of the sweep line is mostly a matter of personal choice.

The sensitivity control on CRT display resonance instruments determines the height of the pips (vertical resonance lines) by adjusting the gain of the amplifier. In resonance testing the sensitivity is set so that the pips extend to just beyond the full height of the screen. Too high a sensitivity setting will cause linear distortion of the pips. A higher sensitivity setting is generally required in actual test than when checking the instrument to test blocks. At low sensitivity settings the resonance pips will appear as short vertical loops.

In resonance testing the sensitivity control regulates the height of the resonance pip. At the start of the test is the resonance pip height set just above full screen height or at 3/4 of full screen height?

3/4 of screen height . . . . . Page 4-72
Just above full screen height . . . . . Page 4-73

From page 4-69

You selected, "the brightness control adjusts the scale illumination." You made the wrong selection. The brightness control has no effect on the brightness of the scale. The brightness control adjusts the brilliance of the CRT sweep line. The brightness control is similar to the intensity control of the pulse-echo equipment.

Turn to page 4-70

[redacted]

From page 4-70

No, you made the wrong choice. The resonance pips are adjusted to at least the full height of the scale and preferably slightly above.

To explain further why, observe the scale below. The resonance pips are solid 3/4 of the way up the scale and extended dotted to the top of the scale. As the arrows point out, the resonance pips intersect adjacent harmonics at the 75 calibration mark. It is easy to see that if the pips extended only 3/4 of the way up the scale this thickness indication would be hard to read.

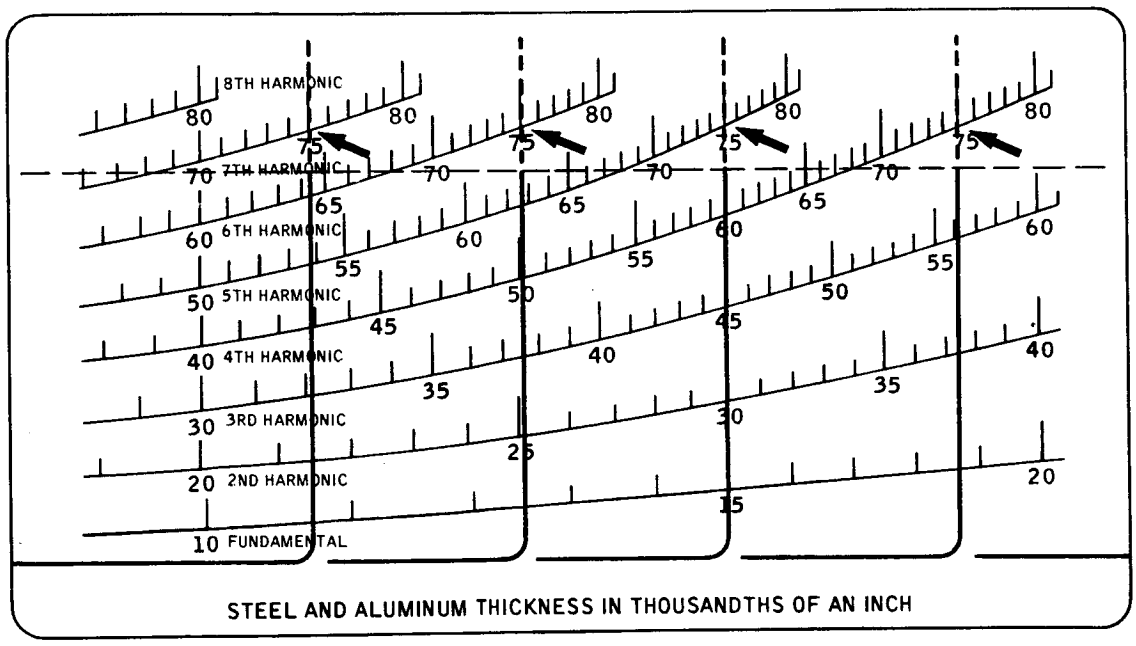

Turn to page 4-73

You made the right choice. At the start of a test the resonance pips are adjusted with the sensitivity control to full scale height or slightly above. It is important to have pips of full scale height to ensure accurate readings at the upper part of the scale.

The sweep control determines the frequency and thickness range swept by the oscillator. Rotation of the sweep control changes the sweep width and the range of frequencies presented on the CRT display. Rotation of the sweep control changes the distance between the resonance pips. Reducing the sweep setting moves the resonance pips apart (narrows frequency range displayed on screen) and increasing the sweep setting moves the pips closer together (widens frequency range displayed on screen). The sweep control is used to set the instrument to precalibrated scales with reference blocks of known thickness.

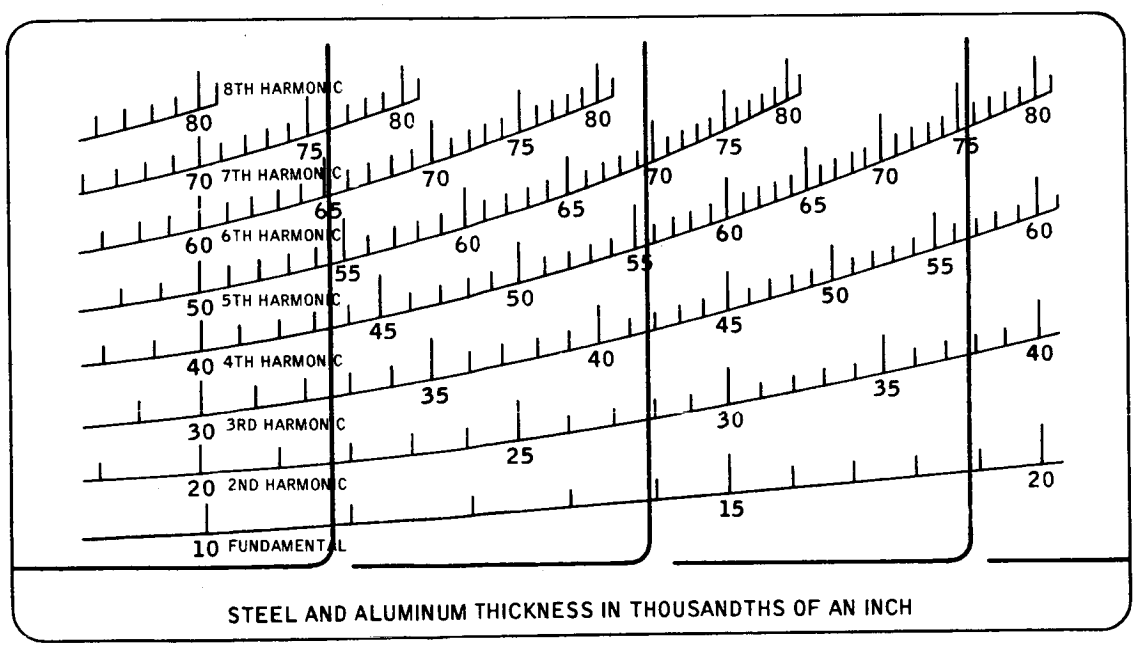

The illustration above represents the display resulting when the transducer is placed on an 0.055-inch thick test block. Would you increase or decrease the sweep setting to align the pips with the 55 calibration marks on the scale?

Increase the sweep setting . . . . . Page 4-74

Decrease the sweep setting . . . . . Page 4-75

From page 4-73

Right, you would increase the sweep setting to align the pips with the 55 calibration marks on the scale because increasing the sweep setting will move the pips closer together.

The calibrate control, on the front of the plug-in oscillator, changes the frequency of the oscillator within the range of the oscillator. For example, an oscillator that has a nominal frequency range of 2 to 4 mc can be adjusted to 1.8 to 3.6 mc or to 2.2 to 4.4 mc. Increasing the calibrate control setting increases the frequency of the oscillator and causes the resonance pips to move to the right. Decreasing the calibrate control setting reduces the frequency of the oscillator and causes the resonance pips to move to the left. The calibrate control is also used to set the instrument to the precalibrated scales with a reference block of known thickness. Each scale directs the initial setting of both the calibrate control and the sweep control. Only small adjustments are required thereafter.

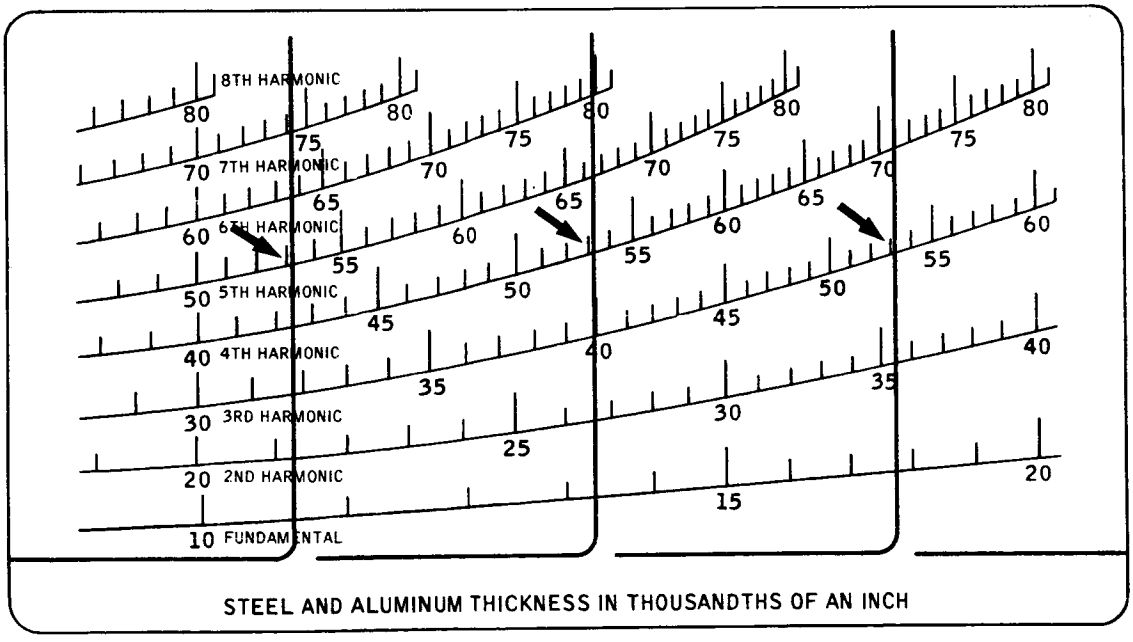

The calibrate control adjusts the frequency of the oscillator and changing the frequency of the oscillator moves the resonace pips along the sweep line. In the illustration above would you increase or decrease the calibrate control setting to align the resonance pips with the 53 calibration marks?

Increase calibrate control setting . . . . . Page 4-76

Decrease calibrate control setting. . . . . Page 4-77

From page 4-73

No, you made the wrong choice. Decreasing the sweep setting would move the resonance pips farther apart and thus farther away from the 55 calibration marks of the scale. Take another look at the illustration.

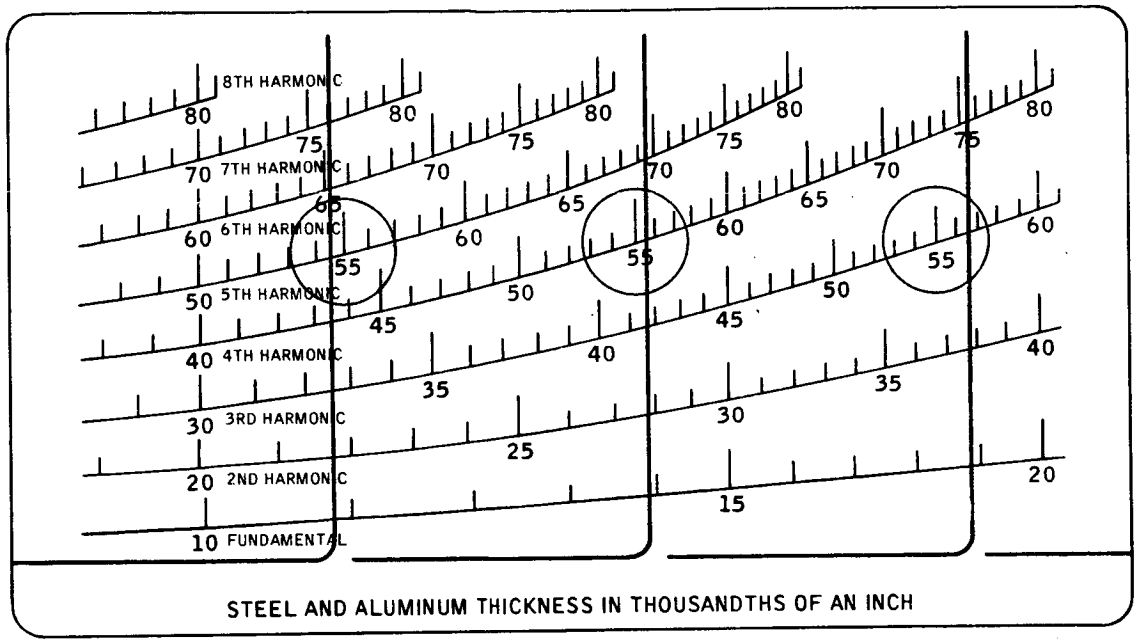

The resonance pips are close to the 55 calibration marks on the scale and close examination reveals that the space between the pips is greater than the space between the 55 calibration marks on adjacent harmonic lines. So to set the instrument to the scale the pips must be moved closer together. Recall we said reducing the sweep setting moves the pips apart and increasing the sweep setting moves the pips closer together. In this case we need to move the pips closer together so we must <u>increase</u> the sweep setting slightly.

Turn to page 4-74

From page 4-74

You said you would increase the calibrate control setting to align the resonance pips with the 53 calibration marks on the scale. Sorry, you have it reversed.

Increasing the calibrate control setting moves all the resonance pips to the right and in this case we need to move them to the left. Decreasing the calibrate control setting would move the pips to the left and align them with the 53 calibration marks.

Turn to page 4-77.

You are correct. Decreasing the calibrate control setting will move all of the resonance pips to the left, and that is what is required in this case to align the resonance pips with the 53 calibration marks on the scale.

The standard and special sweep switch on resonance instruments of this type is well named. The standard sweep position is used unless otherwise specified. The special sweep position changes the characteristics of the sweep and is used only with scales calibrated for special sweep and so marked. The special sweep is used primarily for checking thick materials and for examining thicknesses in a very narrow range. The standard sweep is fairly linear, that is, the resonance pips are almost equally spaced. The special sweep is not linear and the resonance pips are closer together on the right side of the scale.

When the instrument is operated in special sweep, specially calibrated scales are required for which of the following reasons?

The special sweep setting changes the characteristics of the sweep. . . . Page 4-78
The special sweep setting changes the frequency . . . . . Page 4-80

You are right. When the instrument is operated in special sweep, specially calibrated scales are required because the special sweep setting changes the characteristics of the sweep. The sweep becomes nonlinear, so specially calibrated scales are required to compensate for the nonlinearity.

You have learned that in one type of direct readout, CRT display resonance tester, the precalibrated scale, superimposed in front of the CRT, is the key to the test. The scale is chosen that is calibrated for the type of material, in the thickness range of the test specimen. The sensitivity control is set so that the resonance pips extend the full height of the scale. The scale directs the initial setting of the sweep and calibrate controls, and minor adjustments are made to a test block of known thickness within the thickness range of the scale.

You are now ready to inspect the test specimen. The thickness of the specimen is indicated when two or more successive vertical resonance pips intersect adjacent scale harmonic lines at the same calibration (thickness) value. The following information will help you to read the thickness of the test specimen quickly:

1. If only 2 or 3 resonance pips appear on the screen the thickness will be at the lower range of the scale.
2. If 4 or 5 resonance pips appear the thickness will be in the higher range of the scale.
3. Note the thickness indicated by the first resonance pip at the left of the scale on one of the harmonic lines, using 1 and 2 above as a guide. Then check the second resonance pip for the thickness indicated on the next lower harmonic line.
   a. If the adjoining pips indicate the same thickness on adjacent harmonic lines, the correct thickness is being read.
   b. If the second pip indicates a thinner thickness than the first, the correct thickness will be found higher up on the scale.
   c. If the second pip indicates a greater thickness than the first, the correct thickness will be indicated lower down on the scale.

Turn to page 4-79.

[redacted])

4. If the resonance pips are too close together to match with the calibrations on the highest harmonic lines, the thickness is greater than the scale range.
5. If the resonance pips are too far apart to match the calibrations on the lowest harmonic lines, the thickness is less than the scale range.

The precalibrated scales you just learned about are calibrated to read directly the thickness of the specimen. On other scales the readout is in frequency or percentage of thickness. The readout from the frequency scales are converted to thickness measurements either by calculation or by referring to precalculated conversion tables. The readout of the percentage scales indicates the percentage change of thickness from a predetermined value.

Turn to page 4-81 for a review.

From page 4-77

You said that when the instrument is operating in special sweep, specially calibrated scales are required because the special sweep setting changes the frequency. Your answer is incorrect. The special sweep setting does not alter the frequency. The special sweep setting does change the characteristics of the sweep. The sweep becomes nonlinear and the specially calibrated scales are required to compensate for the nonlinearity.

Turn to page 4-78.

[redacted])

From page 4-80

1. Resonance testing is based on the fact that each thickness of a given material has a funda _____ reso _____ frequency.

6. thickness

7. On direct readout, CRT display type resonance instruments that use precalibrated scales, each scale represents a thi _____ range of a given material.

12. sweep

13. The sensitivity control regulates the h _____ of the resonance pip.

18. scale

19. Placing the Standard/Special sweep switch in the special position changes the lin _____ of the sweep.

[redacted])

1. fundamental resonant

2. In resonance testing both fundamental and har_____ frequencies are used.

7. thickness

8. This type of resonance instrument uses plug-in oscillators of various fr_____ ranges.

13. height

14. During testing the sensitivity control is set to extend the resonance pips to f_____ scale height.

19. linearity

20. When the instrument is operated in special sweep, precalibrated scales marked sp_____ sw_____ must be used.

2. harmonic

3. The difference between any two adjacent harmonic frequencies is equal to the fun _____ frequency.

8. frequency

9. The precalibrated scales are also marked to indicate the trans _____, osc _____ range, and instrument settings for which the scale is cal _____.

14. full

15. The sweep control determines the sweep width, that is, the range of frequencies presented on the CRT. Increasing the sweep control setting (increases, decreases) _____ the space between the resonance pips.

20. special sweep

21. In resonance testing with equipment using precalibrated scales the key to the test is the pre _____ sc _____.

3. fundamental

4. In resonance testing the resonant frequency of the test specimen is found by varying the fre_____ of the sound waves applied to the specimen.

9. transducer, oscillator, calibrated

10. The choice of scale is determined by the ma_____ and approximate thi_____ of the specimen.

15. decreases

16. The calibrate control adjusts the fre_____ of the oscillator.

21. precalibrated scale

22. The readout from the precalibrated scales may be in thickness, fre_____ or perc_____ of thickness.

[redacted]

4. frequency

5. The display system of the simpler types of resonance equipment indicates the resonant frequency(s) of the specimen and the thickness of the specimen must be cal _____.

10. material,
thickness

11. The thickness of the specimen is indicated when t _____ or more successive resonance pips intersect adjacent har _____ lines at the s _____ calibration value.

16. frequency

17. Increasing the setting of the calibrate control moves the resonance pips to the (right, left) _____ on the CRT display.

22. frequency,
percentage

23. This completes this review. Now turn to page 5-1.

5. calculated

6. On other more sophisticated resonance testers the thi_____ of the specimen is identified by the equipment display system.

Return to page 4-81, frame 7.

11. two, harmonic
same

12. The brightness control on this type instrument adjusts the brightness of the sw_____.

Return to page 4-81, frame 13.

17. right

18. The initial settings of the sweep and calibrate controls is directed by the sc_____.

Return to page 4-81, frame 19.

When high speed automatic scanning is used in ultrasonic testing and a permanent record of the test is desireable, a C-Scan recording is generally made. C-Scan displays the discontinuities in a plan view but provides no depth or orientation information. The most commonly used recorders use a chemically treated paper that is passed between a printing bar and a helix drum as shown in the illustration below.

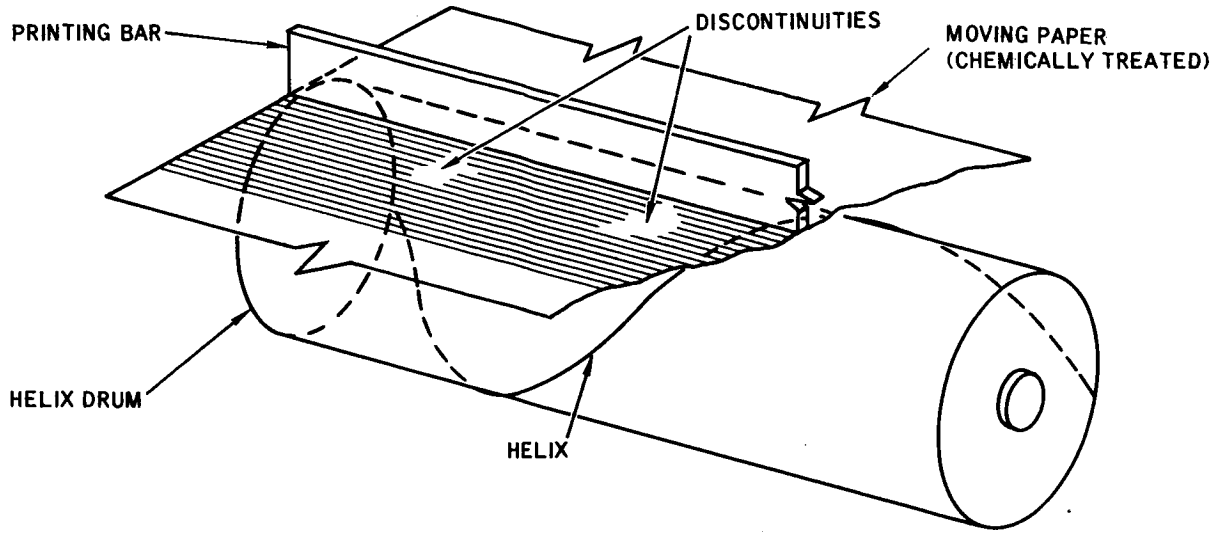

The printing bar has a narrow edge and is electrically connected to one output terminal of the ultrasonic test instrument amplifier. The other terminal connects to the helix mounted on the helix drum. As the drum rotates counterclockwise, the contact point between the bar and the helix slides from left to right. Variations in electric current at the contact point determine the amount of discoloration produced on the paper. One revolution of the drum produces one line of scan. The paper movement is synchronized with the movement of the transducer across the test surface. Whenever a pip of predetermined amplitude occurs, a change of current occurs. In this manner a record of the discontinuities is produced as the transducer scans the test surface.

From a C-Scan recording can you determine the depth of the discontinuity?

Yes . . . . . Page 5-2

No . . . . . Page 5-3

Your answer is incorrect. You can not determine the depth of a discontinuity from a C-Scan. The C-Scan displays a plan view of the test specimen. The illustration below shows the motion of the transducer and the resulting scan lines on both the test specimen and the recording paper. C-Scan reveals the projected length and width of the discontinuity but not its depth in the specimen.

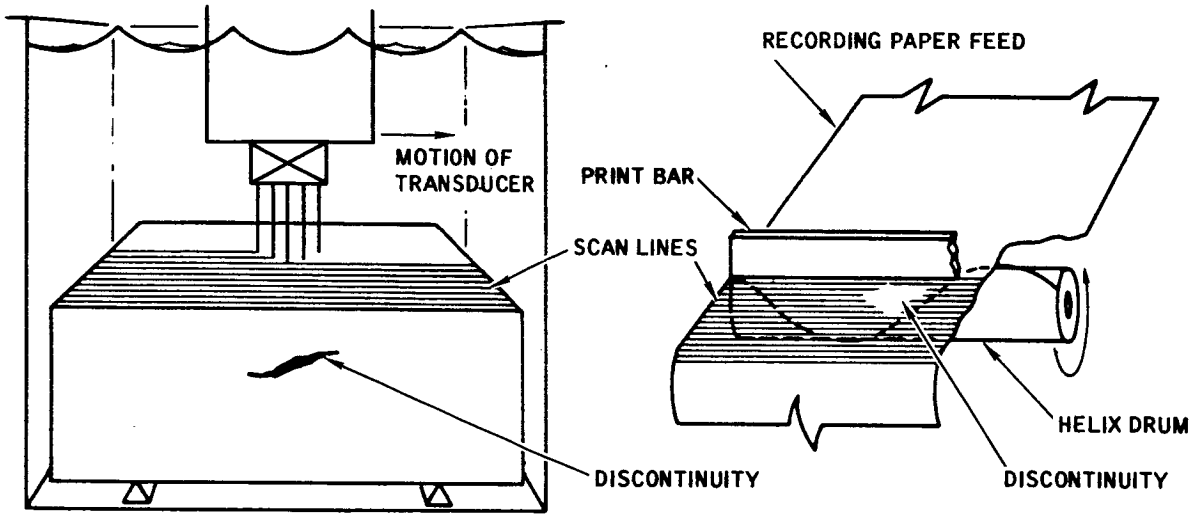

Turn to page 5-3.

You are correct, the C-Scan recording does not tell us how deep the discontinuity is in the specimen. The C-Scan does indicate the projected length and width of the discontinuity as seen from directly above the specimen.

Some C-Scan recorders produce a shaded scan line to indicate the extent a discontinuity pip exceeds a predetermined amplitude. On others the scan line, or absence of it, indicates only that the predetermined amplitude has been exceeded.

In the C-Scan samples below the white (no line) areas represent the discontinuities. The print-out of some recorders can be reversed so that the discontinuities are represented by the lines and the remainder of the specimen would be represented by blank space.

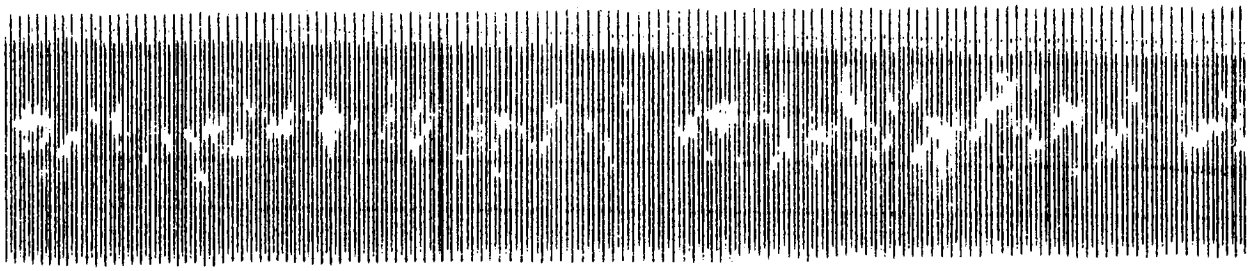

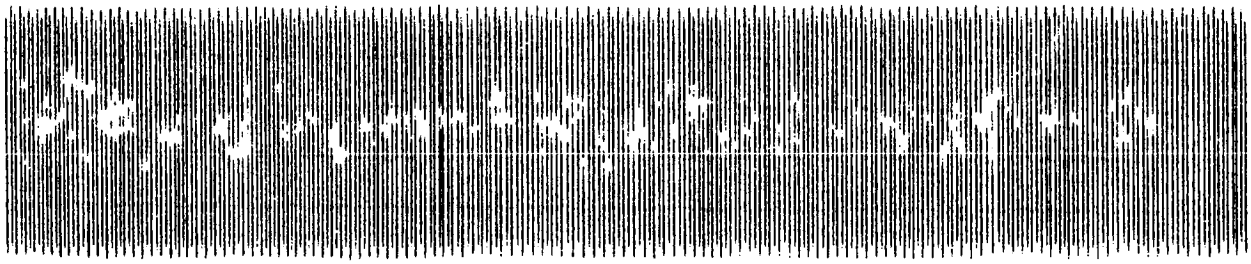

C-Scan recordings are usually used in conjunction with A-Scan equipment.

Which characteristic of the discontinuity do both A-Scan and C-Scan display?

Distance from the surface . . . . . Page 5-4

Size . . . . . Page 5-5

[redacted])

From page 5-3

You said that A-Scan and C-Scan both tell us something about the distance of the discontinuity from the test surface. Sorry, but we don't agree with you. The C-Scan tells us nothing about the discontinuities distance from the test surface (depth), but it does indicate the size. In an A-Scan the size of the discontinuity is indicated by the amplitude of the pip on the CRT screen. In a C-Scan the size of the discontinuity is indicated by the extent of the marked (or unmarked) area of the recording.

Turn to page 5-5.

Size is the right answer. Both A-Scan and C-Scan display indications of the discontinuity size. In an A-Scan the size of the discontinuity is indicated by the amplitude of the pip on the CRT screen. In a C-Scan the size of the discontinuity is indicated by the extent of the lined (or unlined) area of the recording.

In a sense the C-Scan is a recording of the amplitude portion of the A-Scan. The same signals that generate the pips on the A-Scan produce a change indication on the C-Scan recording. The front and back surface signals from the specimen are eliminated from the recording by the instrument gating circuits and the alarm sensitivity control setting determines the amplitude of the signal (pip) required to produce a change of indication on the recording.

The advantages of the C-Scan recording are high speed scanning far in excess of human capability to observe an A-Scan, and the recording becomes a permanent record. Permanent records are important when making an analysis of a test specimen and also because some test specifications require that permanent test records be kept.

C-Scan recorders and recording systems, like ultrasonic test instruments, are made by many manufacturers and again the final word on their operation must come from the manufacturer's operating instructions manual.

View A on the next page is an illustration of one type of C-Scan recorder. View B shows a typical automatic testing set-up with all the major components; immersion tank, carriage or bridge, manipulator, A-Scan test equipment, carriage control panel, recorder control panel and recorder.

Turn to page 5-6.

[redacted])

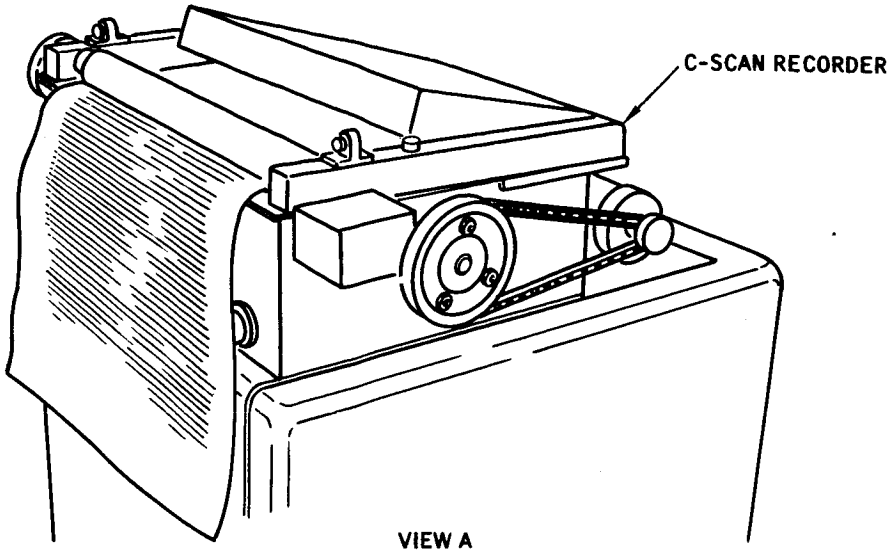

VIEW A

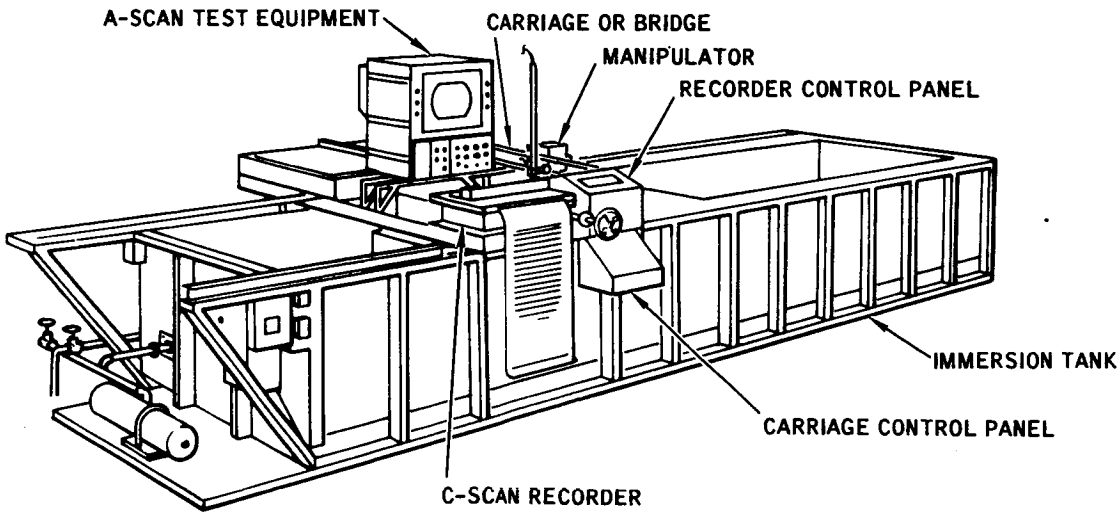

VIEW B

Is the following statement true or false?

During automatic scanning operations both the C-Scan recorder and the A-Scan pulse-echo instrument are in use.

True . . . . . Page 5-7

False . . . . . Page 5-8

True is correct. During automatic scanning both the C-Scan recorder and the A-Scan instrument are in use. The A-Scan instrument supplies the signals to the recorder and the gating and alarm sensitivity controls are set by observing the A-Scan. Some recorders have their own gating circuits and others use the gating circuits of the A-Scan instrument.

In a typical automatic scanning arrangement, similar to view B on the previous page, there will be two control panels. The controls on one panel regulate the functions of the recorder only. The controls on the other panel regulate the operation of the carriage and the synchronized operations of the carriage and recorder.

Choose from the following the advantages of C-Scan recordings.

Permits high speed scanning and provides a permanent record . . . . . Page 5-9

Provides a permanent record and displays discontinuity size accurately . . . . . Page 5-10

From page 5-6

False is the wrong answer. During automatic scanning operations both the C-Scan recorder and the A-Scan instrument are in use. The C-Scan recording provides a permanent record of the inspection and indicates the areas of the test specimen that require closer inspection. The A-Scan instrument will be used to make the closer inspection. The A-Scan instrument also supplies the signals to the recorder.

Turn to page 5-7.

You are right. C-Scan recordings provide a permanent record of the test and also permit high speed scanning. The high speed capability of the recorders makes high speed automatic scanning possible.

The illustration below is an example of an immersion tank with a motorized carriage or bridge, a manipulator, scanner tube, and transducer. The purpose of the carriage is to support the manipulator and scanner tube and to move them about transversely and longitudinally. The carriage illustrated is motorized for automatic scanning but also has hand controls for manual scanning. The longitudinal movement (indexing) of the carriage is in small enough increments to guarantee complete coverage of the test specimen with the smallest transducer.

The manipulator adjusts the vertical and angular position of the scanner tube. The transducer is installed at the lower end of the scanner tube. Both manipulator and scanner tube are rigid enough to prevent deflection during high speed scanning. The purpose of the scanner tube is to make it possible to position the transducer the desired distance above the test specimen and at the desired angle.

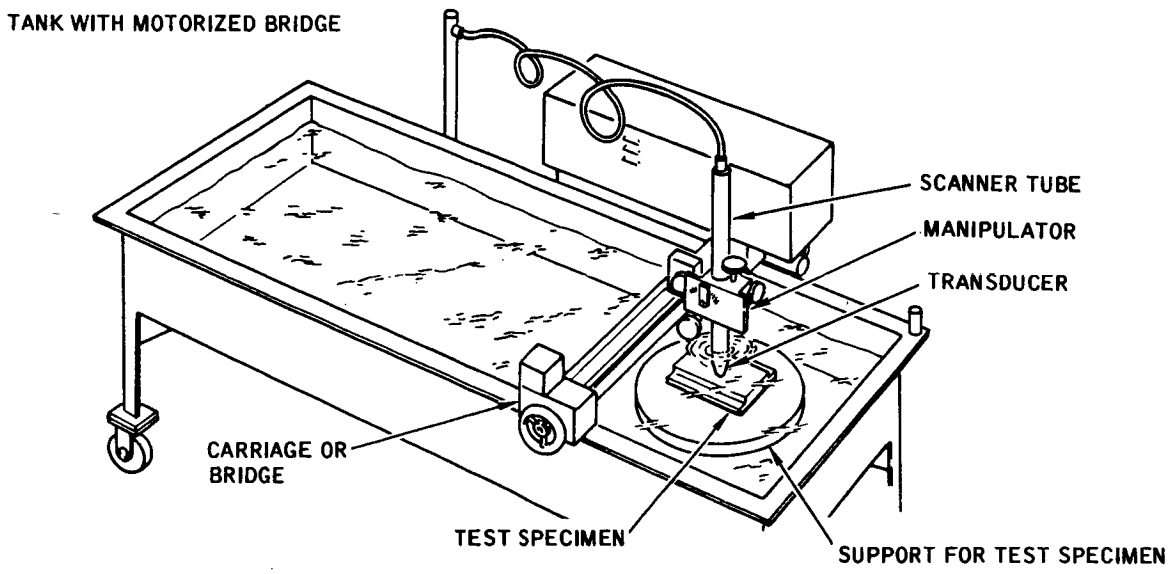

Choose the correct statement.

The manipulator controls the angular and transverse positioning of the scanner tube . . . . . Page 5-11

The manipulator controls the vertical and angular positioning of the scanning tube . . . . . Page 5-12

You made the wrong selection. The C-Scan recorder does provide a permanent record but it does not display the size of the discontinuity accurately.

As you know, the indications received by the test equipment from the test specimen must be compared to some reference standard. The orientation of the discontinuity must also be determined. The C-Scan recording will supply only a gross view of the test specimen; a closer look with the A-Scan will be required to accurately determine the discontinuity orientation and size.

Turn to page 5-9.

[redacted])

Incorrect choice. You said that the manipulator controls the angular and transverse positioning of the scanning tube. The manipulator does control the angular positioning of the scanning tube but the transverse positioning is controlled by the carriage. The manipulator also controls the vertical positioning of the scanner tube. It adjust the distance between the transducer and the test specimen.

[redacted])

From page 5-9

You made the right choice. The manipulator controls the vertical and angular position of the scanner tube (search tube).

Actually it is the vertical position and the angle of the transducer at the lower end of the scanner tube that we are interested in. The scanner tube is just an adapter that permits raising and lowering the transducer, and varying the angle of the transducer. As you learned earlier, in immersion testing only straight beam or focused transducers are used. Angle wedges are not needed. Angle beam testing is accomplished by varying the angle of the transducer (scanner tube) in relation to the test specimen. The manipulator angle adjustment device is marked to show the incident angle setting of the transducer (scanner tube).

Turn to page 5-13 for a review.

From page 5-12

1. When high speed automatic scanning is used a permanent record of the test is made with a _____ -Scan recording.

4. lines, blank, blank

5. C-Scan recordings and the A-Scan screen both display indications about the si_____ of discontinuities.

8. A-scan

9. The front and back surface signals from the test specimen are eliminated from C-Scan recordings by ga_____ circuits.

12. transverse, longitudinal

13. The manipulator on the carriage controls the ver_____ position and the ang_____ position of the scanner tube.

1. C

2. A C-Scan recording displays a pl_____ view of the discontinuities in the test specimen.

5. size

6. C-Scan recorders make h_____ sp_____ automatic scanning possible.

9. gating

10. The gating circuits may either be part of the rec_____ing system or the ultrasonic te_____ instrument.

13. vertical, angular

14. The transducer is mounted at the (upper) (lower) _____ end of the scanner tube.

2. plan

3. A C-Scan recording displays no (size, depth) _____ information about the discontinuity.

6. high speed

7. C-Scan recorders also provide a per _____ rec _____ of the ultrasonic test.

10. recording, test

11. During automatic scanning the speed and indexing of the carriage is syn _____ with the recorder helix and paper sp _____ and indexing.

14. lower

15. The purpose of the scanner tube is to provide a means of raising and lowering the t _____ and varying the an _____ of the tr _____ .

3. depth

4. On a C-Scan recording the discontinuities may be represented by li_____ on a bla_____ background or by bla_____ spaces on a lined background.

Return to page 5-13, frame 5.

7. permanent record

8. C-Scan recorders are generally used in conjunction with __- _____ ultrasonic test equipment.

Return to page 5-13, frame 9.

11. synchronized, speed

12. The carriage (bridge) of automatic scanning equipment supports the manipulator and scanning tube and provides the tran_____ and long_____ movement of the transducer.

Return to page 5-13, frame 13.

15. transducer, angle transducer

Turn to page 5-17.

From page 5-16

Congratulations! You have just completed the second volume of the programmed instruction course on ultrasonic testing.

Now you may want to evaluate your knowledge of the material presented in this handbook. A set of self-test questions are included at the back of the book. The answers can be found at the end of the test.

We want to emphasize that the test is for your own evaluation of your knowledge of the subject. If you elect to take the test, be honest with yourself — don't refer to the answers till you have finished. Then you will have a meaningful measure of your knowledge.

Since it is a self evaluation, there is no grade - no passing score. If you find that you have trouble in some part of the test, it is up to you to review the material till you are satisfied that you know it.

Turn or rotate the book 180° and flip back to page T-1 at the back of the book.

ULTRASONIC TESTING - VOLUME II - EQUIPMENT

Self-Test

1. Transducers using quartz crystals were originally used almost exclusively in ultrasonic testing. (True - False) _____.

2. Polarized ceramic transducers are the best receivers of ultrasonic energy while lithium sulphate transducers make the best transmitters. (True - False) _____.

3. In a two transducer testing system, the best transducer combination is a:

   a. Polarized ceramic transmitter and a lithium sulphate receiver
   b. Lithium sulphate transmitter and a polarized ceramic transmitter
   c. Polarized ceramic transmitter and receiver
   d. Lithium sulphate transmitter and receiver

4. Transducer sensitivity is defined as the ability of a transducer to:

   a. Sense many kinds of discontinuities
   b. Detect discontinuities close to the surface of a test specimen
   c. Detect small discontinuities
   d. Detect large discontinuities located close together in depth

5. Transducer resolution is defined as the ability of a transducer to:

   a. Sense many kinds of discontinuities
   b. Differentiate between surface indications and discontinuity indications
   c. Detect small discontinuities
   d. Detect small discontinuities located close together in depth

6. The beam spread of transducers of the same material and frequency is related to size. The larger the transducer, the greater the beam spread. (True - False) _____.

7. The size of a transducer and the amount of energy it will transmit are related. The larger the transducer, the greater the amount of energy transmitted into the test specimen. (True - False) _____.

8. The higher the frequency of a transducer, the:

   a. Greater the beam spread and depth of penetration
   b. Less the beam spread and the greater the sensitivity and resolution
   c. Less the sound beam attenuates thus increasing penetration
   d. Less the sensitivity and the greater the penetration

9. Large diameter, single crystal transducers are generally:

   a. Limited to high frequency testing
   b. Limited to low freqency testing
   c. Applicable for both high and low frequency testing
   d. Used for testing above 10 megacycles only

10. Long, narrow transducers consisting of a mosaic pattern of small matched crystals are called:

   a. Mosaic transceivers
   b. Wide brush transducers
   c. Paint brush transducers
   d. Multicrystal detectors

11. A straight beam transducer transmits sound into a test specimen normal or perpendicular to the surface of the test specimen. (True - False) _____ .

12. Angle beam transducers use a plastic wedge shaped frontal device to transmit energy into a test specimen at angles other than normal. (True - False) _____ .

13. Paint brush transducers produce a wide sound beam for rapid scanning of large areas. (True - False) _____ .

14. Angle beam transducers are used to:

   a. Locate and evaluate discontinuities lying parallel to the surface of the test specimen
   b. Locate and evaluate discontinuities that lie other than parallel to the surface of the test specimen
   c. Detect discontinuities that are parallel to the sound beam
   d. Detect discontinuities in immersion testing

15. Contact angle beam transducers are generally identified by the:

   a. Reflected angle of the shear waves generated
   b. Refracted angle of the longitudinal waves generated
   c. Refracted angle of the shear waves generated
   d. Reflected angle of the longitudinal waves generated

16. A device added to the front of a contact transducer to match the curvature of a test specimen is called a:

   a. Sloped shoe
   b. Frontal lens
   c. Curved lens
   d. Curved shoe

17. Acoustical lenses increase transducer sensitivity and resolution but decrease their useful range. (True - False) _____ .

18. The two basic types of acoustical lenses used are:

a. Cylindrical and concave
b. Spherical and convex
c. Cylindrical and spherical
d. Concave and convex

19. The best surface resolution can be obtained using a:

a. Short focal length transducer
b. Long focal length transducer
c. Collimator
d. Curved shoe

20. Both the cylindrical and spherical lenses can be used as contour correction lenses. (True - False)_____ .

21. Collimators are used to improve the directivity of a sound beam and decrease beam spread. (True - False)_____ .

22. The technique in which a flowing stream of water is used to couple the transducer to the test specimen is called:

a. Water column technique
b. Bubbler technique
c. Squirter technique
d. a, b, and c

23. The wheel-type transducer sometimes used in ultrasonic testing consists of a transducer mounted inside a liquid filled tire. (True - False)_____ .

24. Single transducers are:

a. Transmitters only
b. Receivers only
c. Both transmitter and receiver
d. a, b, and c

25. Two single transducers, one a transmitter and one a receiver, mounted in a common case but separated by a sound barrier are called:

a. Transceivers
b. All purpose transducers
c. Double transducers
d. Stacked transducers

26. Double transducer testing reduces the so called "dead zone" found near the front surface of a specimen. (True - False) _____ .

27. A couplant is used in ultrasonic testing to:

a. Lubricate the transducer and facilitate scanning
b. Exclude air from between the transducer and test specimen
c. Accelerate the passage of sound through a test specimen
d. Dampen the transducer vibrations to avoid possible damage to a test specimen

28. The choice of a couplant is largely dependent upon the:

    a. Test specimen's grain structure
    b. Geometry or shape of the test specimen
    c. Surface condition of the test specimen
    d. Test specimen's size

29. The acoustical impedance of an ideal couplant:

    a. Should be less than that of the transducer
    b. Should be higher than that of the transducer
    c. Should be between that of the transducer and the test specimen
    d. Need not be considered

30. In general, to ensure good sound transfer, a couplant should be as thin as practicable and of uniform thickness. (True - False) _____ .

31. Wetting agents are sometimes added to couplants to:

    a. Produce a more desirable impedance ratio between the transducer and test specimen
    b. Prevent the formation of small air bubbles which could cling to a test specimen
    c. Accelerate the passage of sound through the test specimen
    d. Increase the couplant's viscosity

32. In addition to wetting agents, some couplants include a corrosion inhibitor. (True - False) _____ .

33. Standard reference blocks are used to:

    a. "Standardize" ultrasonic equipment
    b. Compare and evaluate discontinuity indications
    c. Verify instrument accuracy
    d. All of the above

34. Artificial discontinuities in standard reference blocks are usually in the form of a:

    a. Stepped hole
    b. Round-bottom hole
    c. Flat-bottom hole
    d. Tapered hole

35. It is important that the reference block material have the same or similar sound attenuation, sound velocity, and acoustical impedance as that of the test specimen. (True - False) _____ .

36. The metal distance in a standard reference block is defined as the distance between the:

    a. Front and back surfaces of the reference block
    b. Front surface and flat bottom of the artificial discontinuity
    c. Flat bottom of the artificial discontinuity and the back surface of the reference block
    d. Sides of the reference block

37. Blocks which provide a discontinuity size reference and are used to check test system linearity are known as:

    a. Area amplitude blocks
    b. Discontinuity amplitude blocks
    c. Reference amplitude blocks
    d. Distance amplitude blocks

38. Blocks which are used to evaluate a discontinuity's size at various depths within a test specimen are known as:

    a. Area amplitude blocks
    b. Discontinuity amplitude blocks
    c. Reference amplitude blocks
    d. Distance amplitude blocks

39. The Alcoa "Series A" area amplitude blocks have flat bottom holes:

    a. All of the same diameter which vary in depth from 1/64 inch in the Number 1 block to 8/64 inch in the Number 8 block
    b. 3/64, 5/64 or 8/64 inch in diameter with metal distances ranging from 1/16 to 5 3/4 inches
    c. Drilled to different depths from the front surface of the reference block
    d. All of the same depth and ranging in diameter from 1/64 inch in the Number 1 block to 8/64 inch in the Number 8 block

40. The Alcoa "Series B" or Hitt distance amplitude blocks have:

    a. The same metal distances, with flat bottom holes ranging in diameter from 1/64 inch to 8/64 inch
    b. Flat-bottom holes 3/64 inch, 5/64 inch, or 8/64 inch in diameter and metal distances ranging from 1/16 inch to 5 3/4 inches
    c. Flat-bottom holes 1/16 inch in diameter and varying in depth from 1/64 inch to 8/64 inch
    d. An 8/64 inch diameter hole in the Number 1 block and a 1/64 inch diameter hole in the Number 8 block

41. The basic set of ASTM reference blocks is a combination of area amplitude and distance amplitude blocks. (True - False) _____ .

42. A calibration block widely used in contact angle beam testing is the: (choose two)

a. Angle beam block
b. IIW block
c. ASTM block
d. Miniature angle beam block

43. Artificial discontinuities are sometimes added to a sample test specimen so that it may be used as a reference standard. (True - False) _____.

44. Reference plates are another type of direct comparison reference used for evaluating discontinuities. (True - False) _____ .

45. An ultrasonic test instrument that displays pulses representing the amplitude of reflected sound as a function of time and distance is said to display a:

a. Continuous wave
b. A-scan presentation
c. B-scan presentation
d. C-scan presentation

46. The line of light that appears across the face of a CRT screen is called the: (choose two)

a. Horizon line
b. Base line
c. Beam line
d. Sweep or sweep line

47. The first pip to appear at the left side of the CRT screen represents the:

a. Initial pulse
b. Discontinuity
c. Back surface reflection
d. Sweep

48. On pulse-echo instruments, sweep line brightness is regulated by an intensity control, usually found on the front of the test instrument. (True - False) _____.

49. In immersion testing, the initial pulse is also called the:

a. Front surface reflection
b. Back surface reflection
c. Main bang
d. Discontinuity reflection

50. The distance between the front and back surface reflections displayed on a CRT screen represents:

a. Specimen thickness
b. Pulse amplitude
c. Distance traveled by the transducer
d. Discontinuity thickness

51. The amplitude (height) of a pip on the CRT screen indicates the relative size of the discontinuity. (True - False) _____ .

52. In contact testing, the initial pulse on a CRT screen also represents the:

a. Specimen front surface reflection
b. Specimen back surface reflection
c. Discontinuity location

53. The distance between a front surface pip and a discontinuity pip represents the depth of the discontinuity below the specimen front surface. (True - False) _____ .

54. Markers are set up on a CRT screen to:

a. Measure signal amplitude
b. Estimate discontinuity size
c. Represent units of distance
d. Clarify CRT indications

55. Markers can be expanded but not contracted to fit the distance between the front and back surface pips shown on a CRT screen. (True - False) _____ .

56. The CRT scale brightness is regulated by adjusting the:

a. Intensity control
b. Brightness control
c. Scale illumination control
d. Dimmer switch

57. The vertical centering control on an ultrasonic instrument:

a. Rotates the CRT display around the center axis of the screen
b. Adjusts the vertical linearity of screen indications
c. Is used to center discontinuity indications between the front and back surface pips
d. Raises and lowers the sweep line on the CRT screen

58. The horizontal centering control on an ultrasonic instrument:

a. Rotates the CRT display around the center axis of the screen
b. Adjusts the horizontal linearity of screen indications
c. Adjusts the starting point of the sweep line on the CRT
d. Expands and contracts the CRT display

59. Focus and astigmatism controls are used to adjust the sharpness of the:

a. CRT screen scale
b. Sweep line
c. Square wave marker
d. Horizon line

60. Adjusting the sensitivity or gain control adjusts the gain of the receiver amplifier thus changing the amplitude (height) of the pips on the CRT screen. (True - False) _____ .

61. Increasing the sweep length control:

    a. Expands the sweep causing less of the test specimen to be displayed on the CRT screen
    b. Compresses the sweep causing more of the test specimen to be displayed on the CRT screen
    c. Expands the sweep length allowing the ultrasonic energy to penetrate thicker specimens
    d. Expands the sweep causing more of the test specimen to be displayed on the CRT screen

62. The sweep delay control on an ultrasonic instrument:

    a. Expands or compresses the display shown on the CRT screen
    b. Adjusts the starting point of the sweep line on the CRT
    c. Moves the starting point of the CRT display
    d. Adjusts the horizontal linerarity of the CRT screen

63. The expansion or compression of the sweep length is toward or away from the right side of the CRT screen. (True - False)_____.

64. When used in conjunction with the sweep length control, the sweep delay control makes it possible to expand a small segment of the test specimen to cover the entire width of the CRT screen. (True - False) _____.

65. In immersion testing, the initial pulse or main bang can be moved off screen by adjusting the:

    a. Sweep delay control
    b. Sweep length control
    c. Horizontal centering control
    d. Sensitivity or gain control

66. The pulse repetition rate (PRR) control regulates how often a pulse of ultrasonic energy is applied to a test specimen while the pulse length (width) control determines how long the pulse is applied. (True - False)_____.

67. The reject control on an ultrasonic instrument:

    a. Eliminates all spurious indications from the CRT screen
    b. Permits testing of only selected areas within a test specimen
    c. Reduces the amplitude (height) of all pips an equal amount thereby eliminating very low amplitude pips from the CRT screen
    d. Eliminates very low amplitude pips from the CRT screen without affecting those pips above a predetermined amplitude (height)

68. In flaw-alarm/gating circuits, the gate delay control: (choose two)

    a. Determines the starting point of the gate
    b. Determines the end of the gate
    c. Moves the entire gate to the left or right on the CRT screen
    d. Expands or compresses the gate

69. The gate width control: (choose two)

    a. Determines the starting point of the gate
    b. Determines the end of the gate
    c. Expands or compresses the gate
    d. Expands or compresses the CRT display within the gate

70. The alarm sensitivity control in a flaw-alarm/gating circuit:

    a. Eliminates all spurious indications from the CRT screen
    b. Permits testing of only selected areas within a test specimen
    c. Regulates the intensity or volume of the alarm device
    d. Determines the pip height at which an alarm or recorder will be triggered

71. More than one area of the sweep can be gated at the same time and different sensitivity settings used. (True - False) _____.

72. The DAC (distance amplitude correction) control adjusts the instrument sensitivity so that discontinuities of the same size will generate pips of the same height, regardless of the depth of the discontinuity in the specimen. (True - False) _____.

73. Resonance testing is based on the fact that each thickness of a given material has a fundamental resonant frequency or harmonics thereof at which it will vibrate with increased amplitude. (True - False) _____.

74. Resonance instrument indications are obtained by varying the:

    a. Velocity of sound waves applied to the test specimen
    b. Amplitude of the transmitted wave till standing waves are set up
    c. Pulse length of the sound waves applied to the test specimen
    d. Frequency of the transmitted wave till standing waves are set up

75. All resonance instruments provide a direct readout when measuring material thickness. (True - False) _____.

76. On direct readout resonance instruments which use precalibrated scales and a CRT screen, the proper scale is chosen according to: (choose two)

a. The height of the indications appearing on the CRT screen
b. The type of material being tested
c. Approximate thickness of the material being tested
d. The couplant being used

77. The transducer, oscillator, and instrument control settings used with a given precalibrated scale on a CRT display type resonance instrument are:

a. Indicated on the scale
b. A matter of experience
c. Listed on a separate table
d. A matter of trial and error

78. Thickness of the specimen is read from the precalibrated scales of a CRT display type resonance instrument where:

a. The vertical pips cross the scale resonance lines
b. Two or more successive resonance pips intersect two or more adjacent scale harmonic lines at the same thickness value
c. Two or more resonance pips cross two or more scale harmonic lines at the same thickness value
d. Two or more resonance pips intersect two adjacent harmonic lines at the same thickness value

79. The height of the resonance pips on a CRT display type resonance instrument is regulated by the:

a. Calibrate control
b. Sensitivity control
c. Sweep length control
d. Vertical control

80. The calibrate control on a CRT display type resonance instrument adjusts the:

a. Transducer frequency range
b. Instrument sensitivity
c. Ocsillator frequency range
d. Thickness range

81. In resonance testing with a CRT display type instrument the sensitivity control is set to extend the resonance pips to:

a. One half scale height
b. Three quarters scale height
c. Full scale height
d. Suit the operator

82. The sweep control on a CRT display type resonance instrument determines: (choose two)

a. The range of frequencies swept by the oscillator
b. How much of the specimen is represented on the CRT screen
c. The range of frequencies presented on the CRT screen
d. The thickness range represented by the scale

83. Increasing the setting of the calibrate control of a CRT display type resonance instrument:

a. Moves the resonance pips on the CRT display closer together
b. Moves the resonance pips on the CRT display to the right
c. Shortens the height of the resonance pips
d. None of the above

84. The readout of CRT display type resonance instruments that use precalibrated scales may be in:

a. Thickness
b. Frequency
c. Percentage
d. a, b, and c

85. Decreasing the sweep control setting on a CRT display type resonance instrument:

a. Moves the resonance pips to the left
b. Moves the resonance pips further apart
c. Moves the resonance pips closer together
d. Shortens the height of the resonance pips

86. When a CRT display type resonance instrument is operated in Special Sweep, the linearity of the sweep:

a. Increases
b. Decreases
c. Remains the same

87. In ultrasonic testing when high speed automatic scanning is used, a permanent record is made so that the results of the test can be studied. This record is made with:

a. An A-Scan recording
b. A C-Scan recording
c. A facsimile recording

88. A C-Scan recording indicates the discontinuities of the specimen in a plan view but provides no depth information. (True - False) _____.

89. A C-Scan recording can be either positive or negative: that is, the discontinuities may be represented by lines on a blank background or by blank spaces on a lined background. (True - False) _____.

90. C-Scan recordings are usually used in conjunction with:

a. A-Scan equipment
b. B-Scan equipment
c. Direct readout equipment

91. The front and back surface reflection signals are eliminated from the C-Scan recording by:

a. Sweep adjustment
b. Marker circuits
c. Gating circuits
d. Suppression controls

92. The carriage (bridge) on an immersion testing tank provides for the _____ and _____ motion of the transducer.

a. Angular
b. Longitudinal
c. Transverse
d. Vertical

93. The manipulator on the immersion tank bridge regulates the _____ and _____ positioning of the transducer.

a. Angular
b. Longitudinal
c. Transverse
d. Vertical

94. The device held by the manipulator on the immersion tank bridge is called a:

a. Scanner tube
b. Vertical probe
c. Wand

95. During automatic scanning the C-Scan recorder paper and helix drum speeds are synchronized with the transducer movement. (True - False) _____.

96. In immersion testing the transducer is mounted at the top of the scanner tube. (True - False) _____ .

97. In resonance testing, unlike pulse-echo testing, the instrument indications need not be compared to a known standard before proceeding with the test. (True - False) _____ .

ANSWERS FOR SELF-TEST

		Page No. Ref.			Page No. Ref.
1.	true	1-1	28.	c	2-7
2.	false	1-3	29.	c	2-10
3.	a	1-5	30.	true	2-9
4.	c	1-8	31.	b	2-2
5.	d	1-14	32.	true	2-7
6.	false	1-19	33.	d	3-1
7.	true	1-21	34.	c	3-2
8.	b	1-27	35.	true	3-18
9.	b	1-23	36.	b	3-7
10.	c	1-25	37.	a	3-7
11.	true	1-35	38.	d	3-10
12.	true	1-37	39.	d	3-5
13.	true	1-25	40.	b	3-10
14.	b	1-40	41.	true	3-17
15.	c	1-46	42.	b and d	3-27
16.	d	1-44	43.	true	3-21
17.	true	1-53	44.	true	3-35
18.	c	1-49	45.	b	4-2
19.	a	1-59	46.	b and d	4-3
20.	true	1-49	47.	a	4-8
21.	true	1-61	48.	true	4-4
22.	d	1-63	49.	c	4-8
23.	true	1-63	50.	a	4-13
24.	d	1-67	51.	true	4-19
25.	c	1-67	52.	a	4-19
26.	true	1-69	53.	true	4-14
27.	b	2-1	54.	c	4-17

55.	false	4-17
56.	c	4-20
57.	d	4-23
58.	c	4-23
59.	b	4-25
60.	true	4-25
61.	a	4-27
62.	c	4-29
63.	false	4-30
64.	true	4-29
65.	a	4-29
66.	true	4-35
67.	c	4-38
68.	a and c	4-40
69.	b and c	4-40
70.	d	4-40
71.	true	4-43
72.	true	4-43
73.	true	4-61
74.	d	4-61
75.	false	4-62
76.	b and c	4-64
77.	a	4-66
78.	b	4-66
79.	b	4-70
80.	c	4-74
81.	c	4-70
82.	a and c	4-73
83.	b	4-74
84.	d	4-64
85.	b	4-73
86.	b	4-77
87.	b	5-1
88.	true	5-1
89.	true	5-3
90.	a	5-5
91.	c	5-5
92.	b and c	5-9
93.	a and d	5-9
94.	a	5-9
95.	true	5-1
96.	false	5-9
97.	false	4-74

Review page reference on questions that you miss.