General Disclaimer

One or more of the Following Statements may affect this Document

- This document has been reproduced from the best copy furnished by the organizational source. It is being released in the interest of making available as much information as possible.

- This document may contain data, which exceeds the sheet parameters. It was furnished in this condition by the organizational source and is the best copy available.

- This document may contain tone-on-tone or color graphs, charts and/or pictures, which have been reproduced in black and white.

- This document is paginated as submitted by the original source.

- Portions of this document are not fully legible due to the historical nature of some of the material. However, it is the best reproduction available from the original submission.

Produced by the NASA Center for Aerospace Information (CASI)

1 OF 1

N69

14733

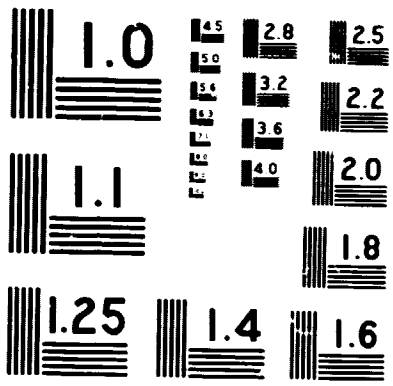

MICROCOPY RESOLUTION TEST CHART

NATIONAL BUREAU OF STANDARDS - 1963

X-616-68-477

NASA TM X- 63418

THE GSFC COSMIC DUST EXPERIMENT PROPOSAL FOR PIONEER F&G

OTTO E. BERG

JOHN A. O'KEEFE

NOVEMBER 1968

GSFC — GODDARD SPACE FLIGHT CENTER

GREENBELT, MARYLAND

FACILITY FORM 602

N69-14733 (ACCESSION NUMBER) (THRU)

26 (PAGES) 1 (CODE)

TMX 63418 (NASA CR OR TMX OR AD NUMBER) 30 (CATEGORY)

PREPRINT

THE GODDARD SPACE FLIGHT CENTER

COSMIC DUST EXPERIMENT

PROPOSAL

FOR

PIONEER F AND G

THE GODDARD SPACE FLIGHT CENTER COSMIC DUST EXPERIMENT

Otto E. Berg, Princiapl Investigator

John A. O'Keefe, Co-experimenter

The format of this proposal generally follows that format suggested in Chapter 3, Section 6 of NHB 8030.1.

Deviations from that format were intentional in order to stress the proposal feature that the experiment, although complex, expensive, and dissimilar from earlier cosmic dust experiments, is currently and successfully performing in two spacecraft - Pioneers 8 and 9.

Otto E. Berg

Otto E. Berg

TABLE OF CONTENTS

I. Preface

II. The Technical Section

1. Summary 1
2. Objectives 1
3. Background and Justification 1
4. The Physicas of the Experiment 4
5. The Geometry of the Experiment 6
6. Sensor Controls 7
7. Calibrations 8
8. Experiment Electronics 10
9. Other Pertinent Information 11
10. Data Reduction and Analysis 12
11. Figures

III. The Management Section

1. Work Plan 1
2. Cost Plan 1
3. Facilities 2

THE TECHNICAL SECTION

of

THE GODDARD SPACE FLIGHT CENTER COSMIC DUST EXPERIMENT

By

Mr. Otto E. Berg

and

Dr. John A. O'Keefe
NASA/Goddard Space Flight Center
Greenbelt, Maryland 20771

Otto E. Berg, Principal Investigator
NASA/Goddard Space Flight Center, Code 616.1
Greenbelt, Maryland 20771

Telephone: Area Code 301 - 982-5920

1. Summary

The GSFC Cosmic Dust Experiment proposed for Pioneer F and G is an improved version of that experiment currently and successfully performing in Pioneers 8 and 9, and to be launched in Pioneer E. It is a complex of plasma sensors; acoustical sensors; sensor controls; and monitor electronics designed to yield data which justify a high degree of confidence and command a high degree of experimental integrity. The flight portion of the experiment will measure independently and in coincidence several physical parameters of cosmic dust particles including speed, direction, energy, and momentum. Its capabilities will provide significant data on the cosmic dust environment in the asteroidal belt and in the vicinity of Jupiter.

2. Objectives

The objectives of the experiment briefly stated are:

1. To measure the cosmic dust flux density in the solar system;

2. To determine the distribution of cosmic dust concentrations (if any) in planetary orbits including the asteroids;

3. To determine the radiant, flux density, and speed of particles in meteor streams; and

4. To perform an in-flight control experiment on the reliability of the acoustical sensor as a cosmic dust sensor.

3. Background and Justification

Preliminary analyses of data from the cosmic dust experiments on Pioneers 8 and 9 show large deviations from the cosmic dust

environment as deduced from earlier measurements. The principal deviation is in the much lower influx rates or dust concentrations at 1 A.U.

A cosmic dust experiment in Pioneers F and G will provide data on influx rates in the asteroidal belt and the vicinity of jupiter for comparison with near-earth influx rates. This comparison is crucial to our understanding of the evolution of the lunar surface (and in fact of the surface of any body such as a comet or meteorite which lacks an atmosphere). The reason is as follows: From the study of C, ^{3}He, ^{26}Al, some of the isotopes of Ne, etc., it is possible to establish that many stone meteorites have surfaces which have been accumulating the results of bombardment by primary cosmic rays for some tens of millions of years.

Primary cosmic rays are absorbed in something like a meter of stone. Hence the erosion rate on meteorites in space must not be much more than meters per tens of millions of years. In fact, by elaboration of this argument, it has been generally agreed that the erosion rate is not over 5mm/million years.

It is tempting to apply these erosion rates to the moon. There is hard rock a few meters down on the moon. Presumably the overall erosion rate is controlled by the rate at which the hard rock is ground up. Moreover, the upper portion of the lunar surface is a very fine material. If this is the result of grinding, then fine particles are needed to explain it. But as soon as we

attempt to apply meteorite erosion rates to the moon, we are asked whether this is legitimate. Is it not possible that the erosion rates over most of the orbit of a meteorite are very different from the erosion rates on the moon, and perhaps much lower?

Thus a calibration of the meteorite erosion rate in terms of the erosion rate in the vicinity of the earth is critical. Among the important conclusions it may be possible to draw from such a comparison is the conclusion that the whole idea of the lunar regolith (a term employed by Shoemaker to designate the lunar soil, carrying the implication that it is the result of a process of erosion) is a myth. It may be that the fine upper layer of the moon is volcanic ash.

It was found by the Surveyors that the lunar surface has a thin layer, about 0.5 mm thick or less, which is brighter than the lower layers. With the rates of micrometeorite bombardment now coming out, it is possible that this is really the whole extent of the regolith. In this case, we would understand why it is brighter than the lower layers, since rocks nearly always get brighter when ground up.

At present we know literally nothing experimentally about meteors which do not intersect the earth's orbit. It would be most helpful to have even a small number of orbits from further out. For instance, are micrometeorites the result of grinding operations in the asteroid belt, or are they something thrown off comets when active? If the former, they should be more common.

We can guess that meteors tend to follow orbits like comets, but even this doesn't tell us much about meteor orbits in the asteroid belt because most comets do not become visible until they get well inside the asteroid belt.

4. The Physics of the Experiment

The proposed experiment is shown schematically in Figure 1. It consists of a front film-grid sensor array and a rear film-grid sensor array spaced 5 cm apart (film plane to film plane), and an acoustical impact plate upon which the rear film is mounted.

The performance of the sensors depends upon two basic, measurable phenomena which occur when a hypervelocity particle impacts upon a surface; the formation of an ionized plasma and a transfer of momentum.

In conjunction with the following explanation of the operation of the experiment, refer to Figure 1 and consider three probable cosmic dust particles types:

(1) A high-energy, hypervelocity particle;

(2) A low-energy, hypervelocity particle; and

(3) A relatively large high-velocity particle.

As a high-energy, hypervelocity particle enters the front film sensor, it yields some of its kinetic energy toward the generation of ionized plasma at the front film. The electrons and ions are collected on appropriately biased grids and film respectively, initiating amplified negative and positive pulses as shown. The positive pulse is pulse height analyzed (PHA) as a

measure of the particle's kinetic energy. As the particle continues on its path, it yields its remaining energy at the rear sensor film (and plate), generating a second set of plasma pulses and an acoustical pulse (if the particle's momentum is sufficient). PHA is performed on the plasma pulse and a peak pulse height analysis (PPHA) is performed on the acoustical sensor output.

As a low-energy hypervelocity particle enters the front sensor, it yields all of its kinetic energy at the front film. A PHA is performed on the positive output signal as a measure of the particle's kinetic energy.

As a relatively large high-velocity particle enters the experiment, it may pass through the front and rear film sensor arrays without generating a detectable ionized plasma, but still impart a measurable impulse to the acoustical sensor. In this event a PPHA is performed on the acoustical sensor output pulse.

An electronic "clock" registers the time of flight (TOF) of the particle as the time lapse between positive pulses (front film and rear film output signals) which is used to derive the particle's speed.

The TOF sensor, as described, is one of 256 similar sensors (including 31 control sensors) which comprise that portion of the proposed experiment which measures particle speed and direction. Figure 2 is an exploded schematic view of the overall experiment, showing that four verticle film strips are crossed by four horizontal grid strips to effect 16 front and 16 rear film sensor arrays, creating 256 possible combinations. Each grid strip and film

strip connects to a separate output amplifier. The output signals from these amplifiers are used to determine the segment in which an impact occurred. Thus, knowing what front film segment was penetrated and what rear film segment was affected by an impact, one can determine the direction of the incoming particle with respect to the sensor axis and eventually to the spacecraft attitude. The roll index pulse from the spacecraft will be used to determine the sun-spacecraft angle at the time of an impact. This readout is initiated by an impact event involving the front film and/or the rear film and/or the microphone. Thus the angle of the incoming particle with respect to the sun can readily be determined.

GEOMETRY OF THE EXPERIMENT

An exploded view of the front film is shown in Figure 3. A nickel grid, the parylene* substrate, and the parylene encapsulation serve only as supports for the metal film deposits. The rear film is a 60μ molybdenum sheet cemented to a quartz acoustical sensor plate. The optical transparency of each of the grids (including support mesh) is 98.8 percent.

*A patented product of the Union Carbide Corporation

The maximum field of view of the experiment is that of the front film array and is square with a half angle of 60° yielding a 4.5 steradian field. The minimum angular resolution of each TOF detector is $\pm 27^{\circ}$.

SENSOR CONTROLS

An ideal sensor control is one which is exposed to the same "environment" as the active or main sensor. "Environment" encompasses electrical and magnetic radiation, thermal radiation, thermal gradients, etc. Controls installed somewhere in the spacecraft and sheltered from the total environment are ineffective. The controls used in this experiment are designed to perform under the same conditions as the main sensor as much as possible.

A simplified diagram of the overall experiment and of the position of the sensor controls is shown in Figure 4. The upper left segment of the front film-grid array and the upper right segment of the rear film-grid array are used as controls for the ionization sensors. An epoxy resin coating covers the control grids and films, isolating them from the products of ionization caused by impacts upon their area (i.e., electrons and ions generated by hypervelocity impacts upon the epoxy cannot be collected upon the grids or films). The resin coat does not, however, constitute a shield from electrical or magnetic radiation. (Thermal noise is not an important factor in ionization sensors.)

A microphone control is shown in the lower right corner of the rear plate. It is unique in that it is a "live microphone" attached to a separate impact plate having one-fifteenth the effective area of the main microphone plate. Thus the control is truly exposed to the same environment as the main microphone, including impacts by cosmic dust, and one would expect an approximate ratio of 1:15 between impacts on the control and impacts on the main microphone sensor.

As was mentioned earlier among the objectives of the experiment, the acoustical sensors are designed to perform an in-flight study on the reliability of the microphone as a cosmic dust sensor, in addition to their performing as an impact sensor for these particular missions.

CALIBRATIONS

Extensive calibrations have been performed on the sensor using a 2-Mev electrostatic accelerator. Unfortunately, the particles used for calibration have been limited to high-density, hard spheres of iron (10^{-13} gm < mass < 10^{-9}gm) and to velocities merely approaching the low end of the meteoroid velocity spectrum (2 km/sec - 10 km/sec). Accordingly, when considering the sensitivities of the sensors as derived from these calibrations, one must consider the possible latent discrepancies which may become manifest in subsequent measurements in space when the sensors are exposed to projectiles of diverse density, structure, composition, and higher velocities.

The threshold sensitivity of the front film to laboratory projectiles (PHA) is 0.6 erg. Time of flight is registered for laboratory particles having kinetic energies of 1.0 erg or greater. The experiment is design-limited to particles having velocities ranging from 2 to 72 km/sec.

The threshold sensitivity of the acoustical sensor is $2x10^{-5}$ dyne-sec (including deceleration by the front film).

Hypervelocity particles passing through the front film are decelerated in inverse proportion to their kinetic energy (for a velocity range of 2-10 km/sec). For particles having the minimum energy required to exhibit time of flight (1.0 erg), the deceleration is 40 percent. Deceleration drops to 5 percent for particles having 10 ergs.

Inflight calibration will be provided and initiated by ground command. Two different formats of simulated data pulses are alternately presented by the experiment to the input of each of the amplifier systems to check the condition of the electronics and the plasma sensors. Two formats alternately provide a high and a low amplitude pulse to monitor the lower and upper sensitivities of the amplifiers. Front film pulses and rear film pulses are appropriately spaced and in proper sequence to monitor the TOF electronics and solar aspect electronics. All accumulators advance with in flight calibration.

In addition to the electronic monitors, the in-flight calibration provides a check on the physical condition of the plasma sensors. The positive pulse to the front and rear film amplifiers is also impressed upon the film. Due to capacitative cross-talk between the film and its corresponding grid, the large calibration pulse is amplified sufficiently in the grid amplifier also to be displayed in read-out. Admittedly, the same cross-talk will appear for plasma current pulses resulting from impacts by high energy particles also, but only for those plasma pulses corresponding to the extreme energy range of the sensors.

EXPERIMENT ELECTRONICS

A block diagram of the proposed experiment is shown in Figure 5. The positive-going pulse from each "A" film strip is amplified and fed into a threshold one-shot. The output pulse performs three functions as shown: (1) its identification is impressed directly upon the storage register; (2) it passes through the NOR gate and initiates the TOF measurement; (3) it is gated back to the threshold one-shot to inhibit any other film pulse until the measurement has been completed. An inhibit signal to the other three films is necessary to avoid capacitative cross-talk for high-energy impact signals. As shown, the "A" film is pulse-height analyzed and injected into the storage register.

Positive-going pulses from the "B" film pass through a similar, but separate, electronic path with the exception that the pulse is used to stop the TOF clock. If no "B" film pulse follows an "A" film pulse, the TOF register goes to the full (63 bits) state and remains full until another event occurs.

Negative-going pulses from each of the "A" and "B" grids are amplified via separate units and ID-registered as shown.

The output signal from the crystal sensor (microphone) as it responds to impacts is in the form of a ringing sinusoidal wave which increases to a maximum and then decays. After amplification in a tuned amplifier, the peak signal amplitude is used to: (1) advance the microphone accumulate; (2) start the register reset (readout of register data); and (3) record the amplitude of the impulse imparted to the microphone sensor plate.

Pulses from the control microphone (not shown in the block diagram) follow a similar, but separate, electronic course with the following exceptions: (1) no PHA is performed; and (2) they do not trigger the register reset.

OTHER PERTINENT EXPERIMENT INFORMATION

The weight of the flight unit is 4½ pounds.

The volume of the flight unit is 400 cubic inches in the form of a cube 6" x 8" x 8". The front face of the unit is 6" x 8".

500 milliwatts of power are required for the experiment.

Four seven-bit words are requested for the experiment. Readout should be complete every 30 seconds at the highest spacecraft bit rate.

Only one command is required to perform in-flight calibration.

No data storage is required.

The present state of development is as follows: a prototype and a "flight unit" of the proposed instrument is "on the shelf" as surplus equipment from the Pioneer C, D, and E series. Experiments in the laboratory on the GSFC cosmic dust simulator are being conducted in an effort to further optimize the unit for use in future flights.

A preferred location for the instrument is in the equator of the spacecraft with the experiment sensor axes perpendicular to the spacecraft spin axis. The pointing accuracy required is $\pm 3^{\circ}$.

There are no essential supporting experiments. Desirable supporting experiments are plasma studies; energetic particles studies; and magnetic fields experiments.

5. Data Reduction and Analysis.

A basic program for the analysis of data from the experiment has been written in the sense that the proposed experiment is essentially a sequal to that flown in earlier Pioneers.

The practical and theoretical applications of the data to our understanding of the solar system will be performed principally by Dr. John O'Keefe.

THE MANAGEMENT SECTION

of

THE GODDARD SPACE FLIGHT CENTER COSMIC DUST EXPERIMENT

By

Mr. Otto E. Berg

and

Dr. John A. O'Keefe
NASA/Goddard Space Flight Center
Greenbelt, Maryland 20771

Otto E. Berg, Principal Investigator
NASA/Goddard Space Flight Center, Code 616.1
Greenbelt, Maryland 20771

Telephone: Area Code 301 - 982-5920

1. WORK PLAN

The duties and responsibilities of personnel involved in this experiment are specified:

Otto E. Berg, as principal investigator, assumes the responsibilities of that position as specified in NAB 8030.1A; April, 1967; Section III - Mr. Berg is currently principal investigator on a cosmic dust experiment in Pioneers C, D, and E. He has served as project scientist on three Aerobee rockets in the past. He is currently in charge of a 2-million-volt electrostatic dust particle facility at Goddard. He has a Bachelors Degree in physics and chemistry from Concordia College, Moorhead, Minn.

Dr. John A. O'Keefe, jointly assumes the responsibility of data reduction and the practical and theoretical applications of the data to our understanding of the solar system.

Dr. O'Keefe is the assistant chief of the Theoretical Division at the Goddard Space Flight Center. He holds a Ph.D in astronomy from the University of Chicago. His experience is best expressed by his publications which includes: a book on Tektites (1963); co-author of a book on The Nature of the Lunar Surface; and almost a hundred papers on Geodesy, Selenology, and the physical theory of tektite formation.

2. COST PLAN

As stated, the proposed experiment is essentially ready for flight model fabrication. A prototype model and one flight unit are surplus units from the Pioneer C, D, and E missions.

Proposed optimization experiments on these units are continuing and should require 3 man months each of a professional and a technician.

The fabrication and testing costs of each instrument for Pioneer F

and G should not exceed 90 K.

There are no anticipated major expenditures for laboratory equipment.

3. FACILITIES

A 2-million volt Electrostatic Dust Particle Facility exists at GSFC. A major modification of this unit will be completed in January 1969.

It will be capable of accelerating spheres of a mass range of 10^{-10}-10^{-15} grams to velocities of 1 - 80 km/sec.

The new modification will increase the capability of the facility to select exclusively particles of a desired velocity and/or charge.

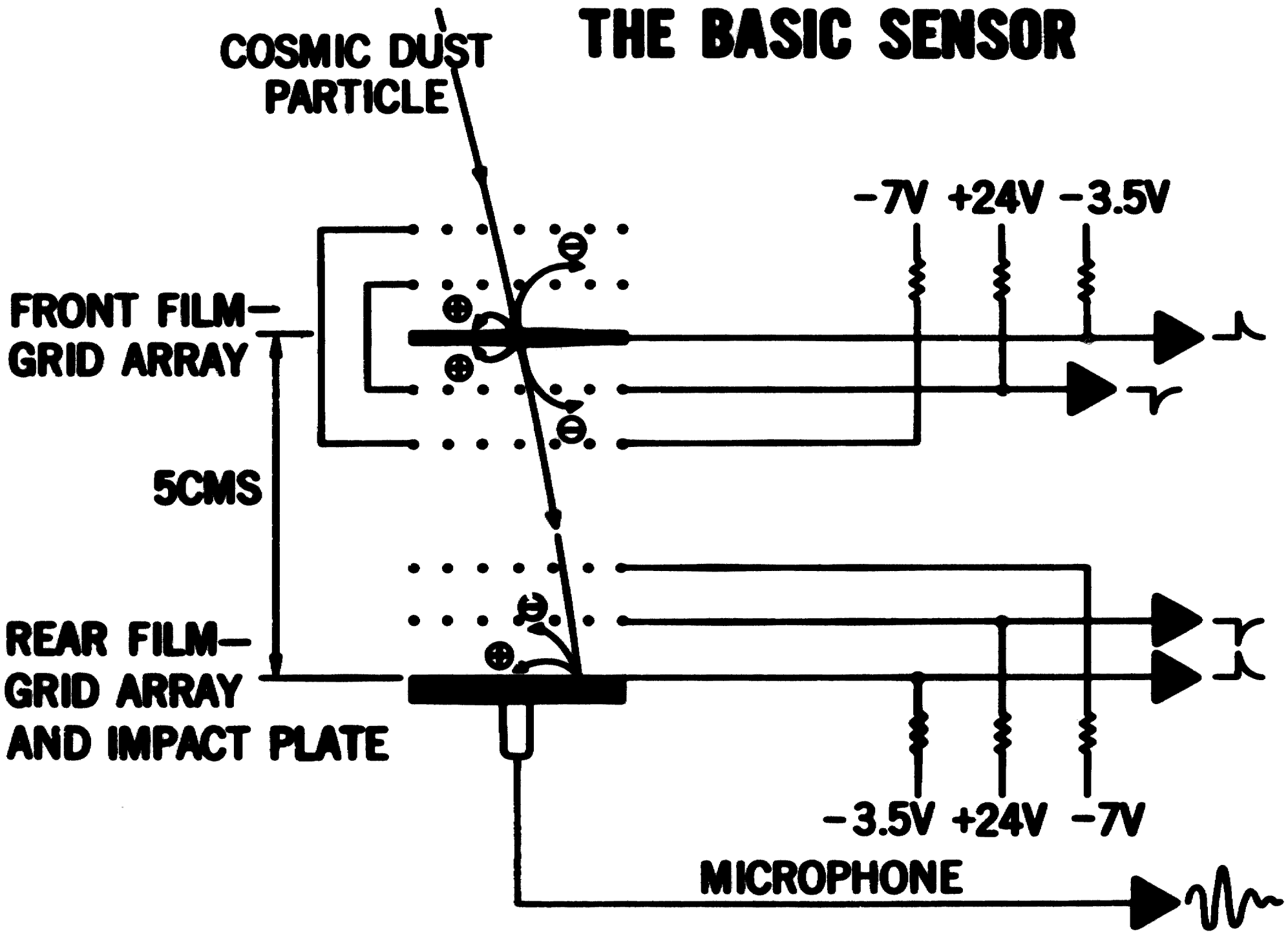
THE BASIC SENSOR
COSMIC DUST PARTICLE
-7V +24V -3.5V
FRONT FILM-GRID ARRAY
5CMS
REAR FILM-GRID ARRAY AND IMPACT PLATE
-3.5V +24V -7V
MICROPHONE

Figure 1

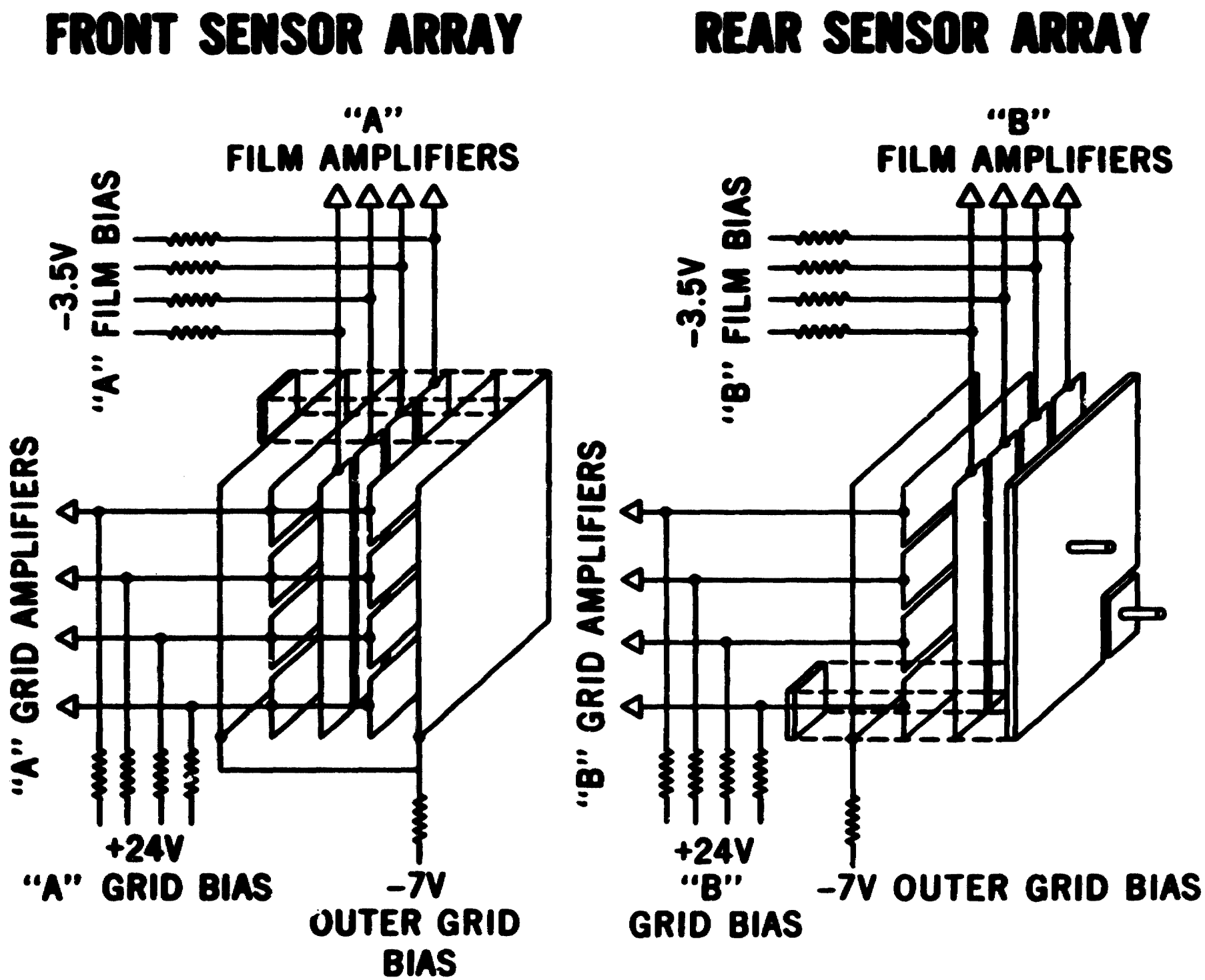
FRONT SENSOR ARRAY
REAR SENSOR ARRAY
"A"
FILM AMPLIFIERS
-3.5V
"A" FILM BIAS
"A" GRID AMPLIFIERS
+24V
"A" GRID BIAS
-7V
OUTER GRID
BIAS
"B"
FILM AMPLIFIERS
-3.5V
"B" FILM BIAS
"B" GRID AMPLIFIERS
+24V
"B"
GRID BIAS
-7V OUTER GRID BIAS

Figure 2

SUSPENDED FRONT FILM CONFIGURATION

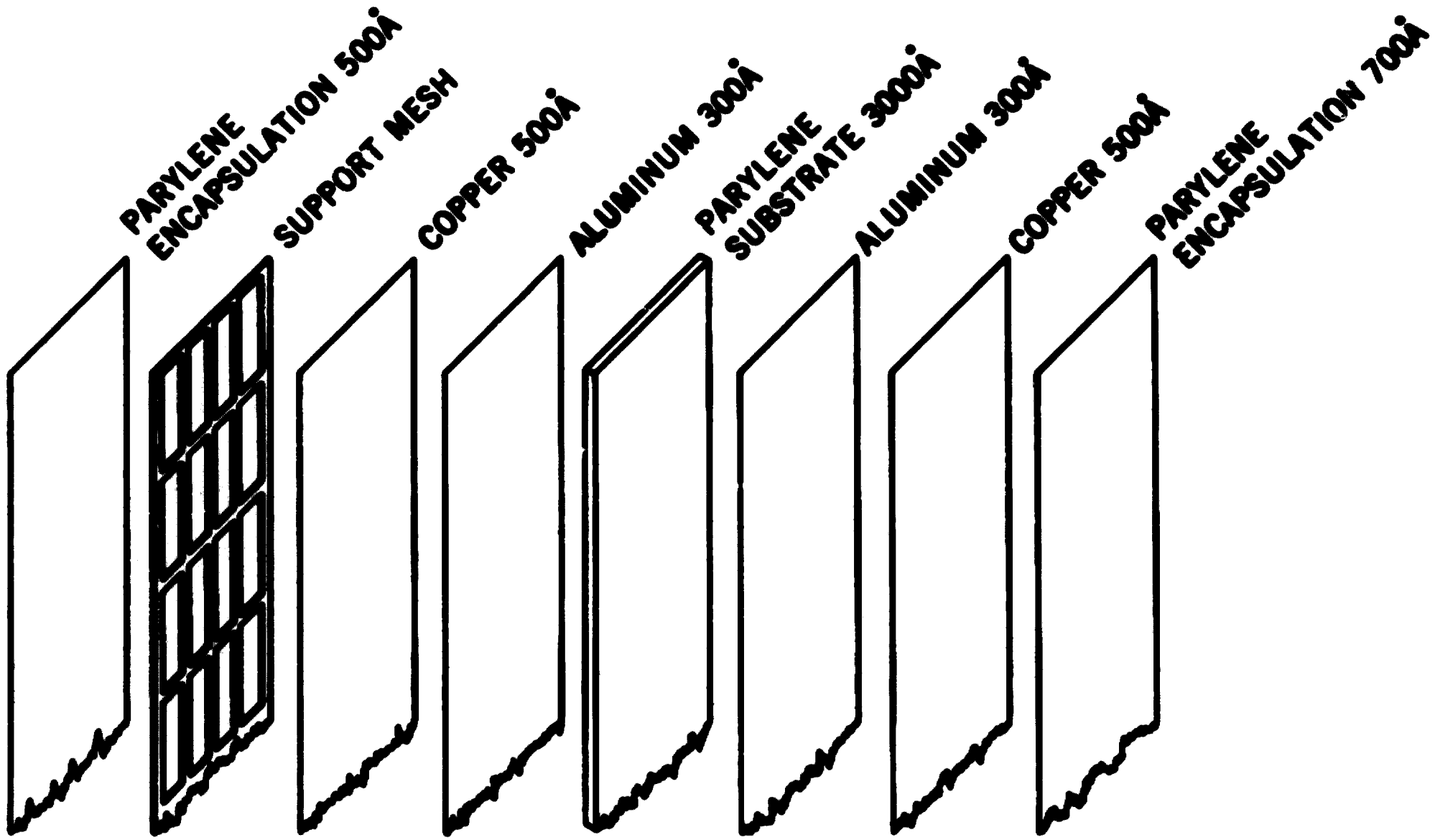

Figure 3

COSMIC DUST SENSOR

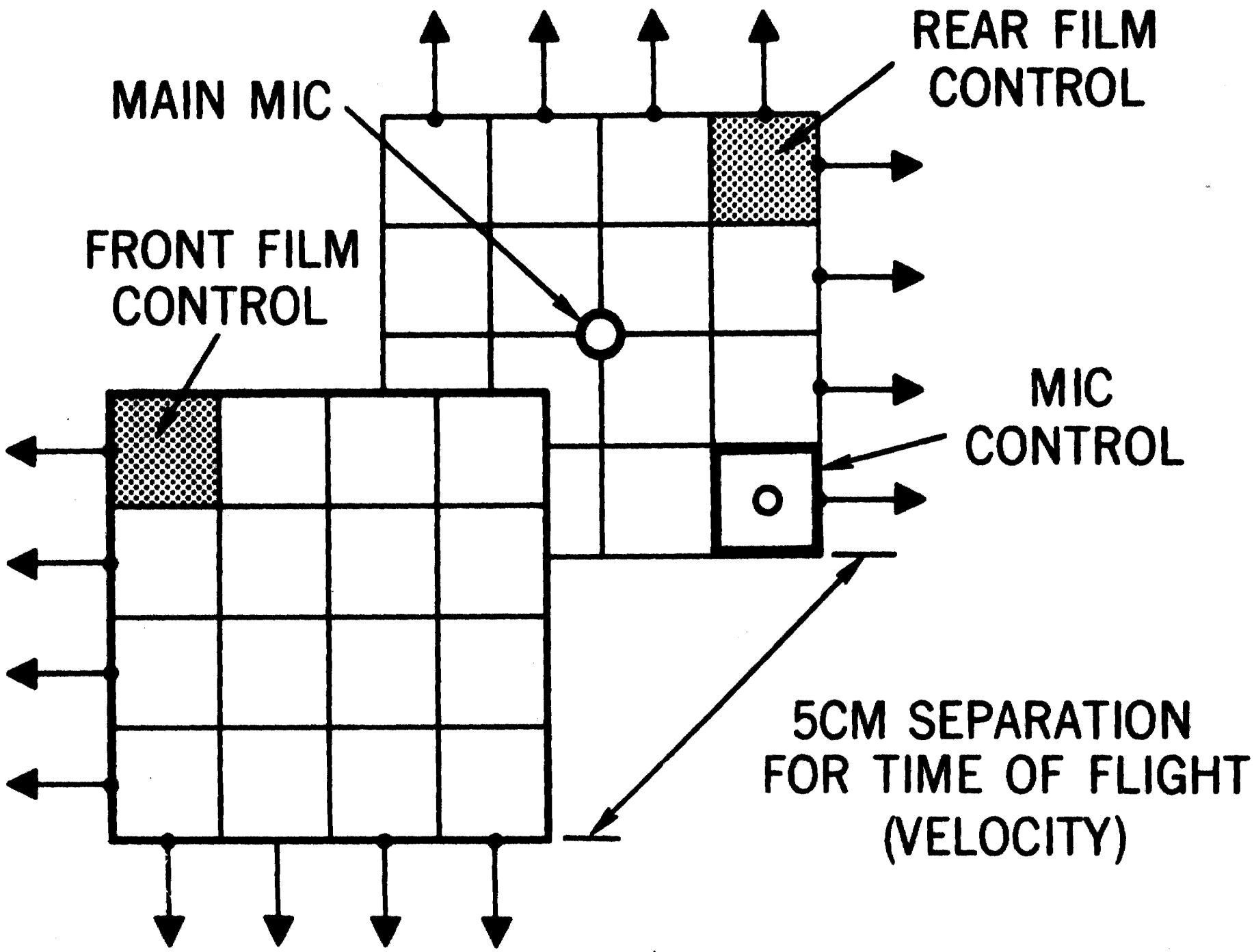

Figure 4

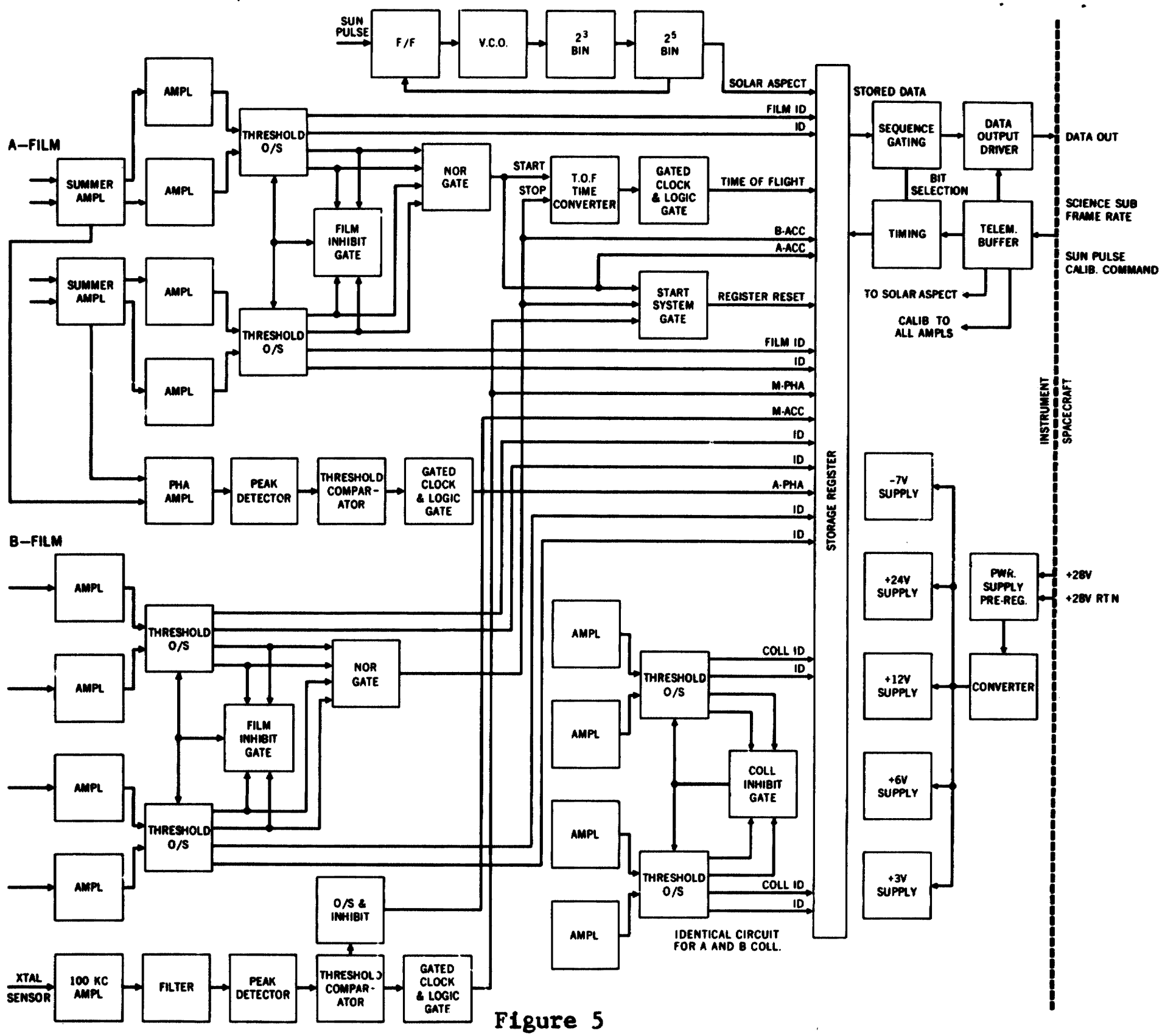
SUN PULSE
F/F
V.C.O.
2^3 BIN
2^5 BIN
SOLAR ASPECT
FILM ID
ID
A-FILM
SUMMER AMPL
AMPL
THRESHOLD O/S
NOR GATE
START
STOP
T.O.F TIME CONVERTER
GATED CLOCK & LOGIC GATE
TIME OF FLIGHT
FILM INHIBIT GATE
B-ACC
A-ACC
START SYSTEM GATE
REGISTER RESET
M-PHA
M-ACC
PHA AMPL
PEAK DETECTOR
THRESHOLD COMPAR-ATOR
A-PHA
B-FILM
COLL ID
COLL INHIBIT GATE
O/S & INHIBIT
XTAL SENSOR
100 KC AMPL
FILTER
IDENTICAL CIRCUIT FOR A AND B COLL.
STORAGE REGISTER
STORED DATA
SEQUENCE GATING
DATA OUTPUT DRIVER
DATA OUT
BIT SELECTION
TIMING
TELEM. BUFFER
SCIENCE SUB FRAME RATE
SUN PULSE CALIB. COMMAND
TO SOLAR ASPECT
CALIB TO ALL AMPLS
INSTRUMENT
SPACECRAFT
-7V SUPPLY
+24V SUPPLY
+12V SUPPLY
+6V SUPPLY
+3V SUPPLY
PWR. SUPPLY PRE-REG.
CONVERTER
+28V
+28V RTN

Figure 5