https://ntrs.nasa.gov/search.jsp?R=19690008396 2019-01-01T11:05:23+00:00Z

N69-17728

SD 68-850-1

CASE FILE COPY

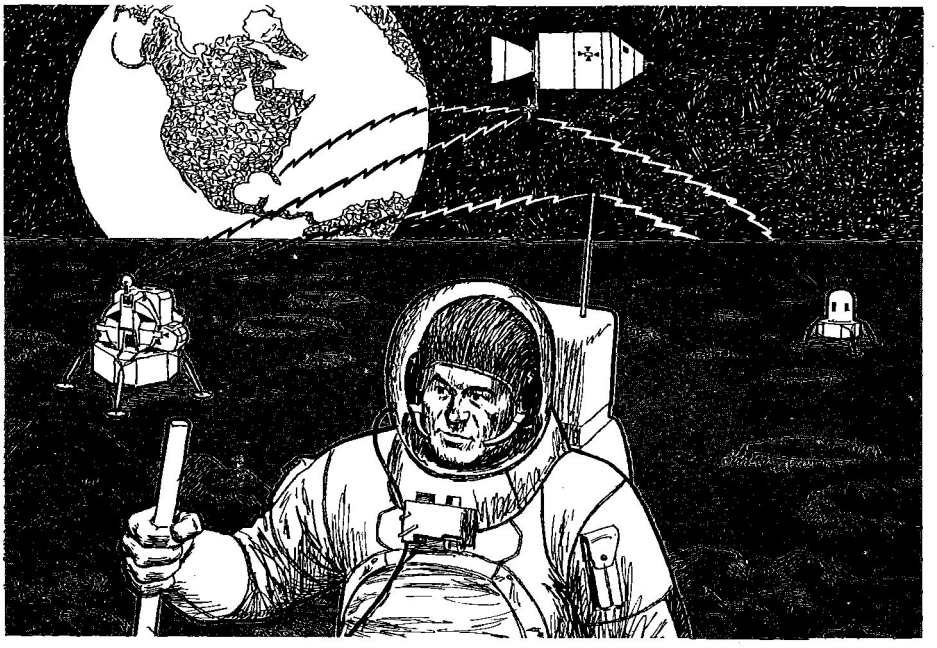

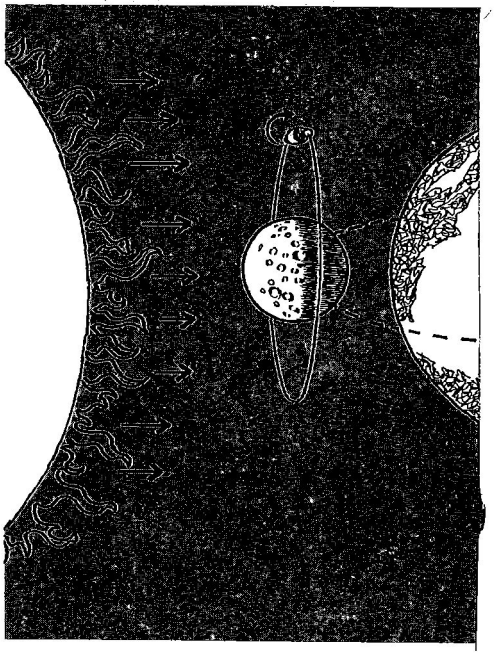

Extended Lunar Orbital Rendezvous Mission

VOLUME I - TECHNICAL ANALYSIS

SPACE DIVISION OF NORTH AMERICAN ROCKWELL CORPORATION

SD 68-850-1

A STUDY OF AN EXTENDED LUNAR ORBITAL RENDEZVOUS MISSION (ELOR)

FINAL REPORT

Volume 1
TECHNICAL ANALYSIS

January 1969

Contract NAS2-4942

Prepared by

Roy B. Carpenter, Jr.
Study Manager

SPACE DIVISION
NORTH AMERICAN ROCKWELL CORPORATION

FOREWORD

This is Volume I of a three-volume report recording the results of a study of the Application of Data Derived under a Study of Space Mission Duration Extension Problems to an Extended Lunar Orbital Rendezvous Mission, hereafter referred to as ELOR. The titles of the three volumes are as follows:

Volume I Technical Analysis

Volume II Supplemental Data

Volume III Summary of Results

This document contains a description of the technical analysis of the ELOR mission. The analysis was performed by the Systems Engineering Management Department of the Space Division, of the North American Rockwell Corporation.

The study was performed for the Mission Analysis Division of the Office of Advance Research and Technology (OART), National Aeronautics and Space Administration, Ames Research Center, Moffett Field, California, under Contract NAS2-4942.

The work was performed under the direction of Roy B. Carpenter, Jr., the Study Manager. Substantial contributions were made to this study by the following subcontractors and personnel thereof, who provided the data at no cost to either this study or the earlier baseline study:

1.	A.C. Electronics	Al Lobinstine
2.	Aerojet General*	C. Teague
3.	Air Research Division of Garrett Corp.	Joe Riley
4.	Allis Chalmers*	John Hallenbeck
5.	Allison Division of G.M.*	J.C. Schmid
6.	Bell Aerospace Systems*	T.P. Glynn

*Data supplied for baseline study.

7.	Collins Radio	R. Albinger
8.	Dalmo Victor Corp.*	R.L. Straley
9.	Eagle Pitcher Corp.	Jeff Willson
10.	General Time Corp.*	Fred Schultz
11.	Grumman Aircraft Corp.**	Hart Wagoner
12.	Hamilton Standard Div. of UAC	R. Gredorie
13.	Honeywell Corp.	Jerry Mullarky
14.	ITT Industrial Prod.	R.L. Weir
15.	Marquardt Corp.*	J.B. Gibbs
16.	Motorola Corp	Bill Crook
17.	Northrop-Ventura	T. Kanacke
18.	Pratt and Whitney Div. of UAC	Jay Steadman
19.	Raytheon Mfg. Co.*	H.A. Prindle
20.	RCA Corp (Camden and Burlington)	J. Heavey/S. Holt
21.	Radiation Inc.	Wally Adams
22.	Simmonds Precision Prod.*	W.E. Nelson
23.	Westinghouse Corp.	C.W. Chandler

The study was based on data derived from the baseline study, a company-funded effort, documented under NASA Contract NAS2-4214, and from the mission systems design derived by the Lockheed Missiles and Space Company (LMSC) under Contract NAS8-21006.

*Data supplied for baseline study.

**Work funded under NAS 9-6608

CONTENTS

Section		Page
	ILLUSTRATIONS	vii
	TABLES	xi
	GENERAL ABBREVIATIONS	xv
1	INTRODUCTION	1
	1.1 Background	1
	1.2 Purpose and Objectives	2
	1.3 Study Approach	3
	1.4 Ground Rules and Assumptions	5
2	MISSION REQUIREMENTS AND CONSTRAINTS	9
	2.1 ELOR Mission Description	9
	2.2 Mission Timeline	24
	2.3 Mission System Functional Requirements	24
	2.4 System Functional Duty Cycle Estimates	42
	2.5 Quiescent Mode Operations	42
	2.6 Mission Success/Crew Safety and Abort Criteria	47
	2.7 System Function Downtime Constraints	48
	2.8 Environmental Factors	59
3	ELOR MISSION SYSTEM	63
	3.1 Design Approach	63
	3.2 Command Module Configuration	63
	3.3 Service Module Configuration	72
	3.4 LM Ascent Stage	72
	3.5 LM Descent Stage	75
	3.6 Lunar Shelter Interface	76
4	SYSTEMS ANALYSIS	85
	4.1 Command Module Systems	85
	4.2 Service Module Systems	161
	4.3 Lunar Module Ascent Stage Systems	201
	4.4 Lunar Module Descent Stage Systems	253
5	CONCLUSIONS AND RECOMMENDATIONS	277
	5.1 ELOR Mission Capability	277
	5.2 Mission System Weight Inferences	286
	5.3 Maintenance and Repair (M&R) Requirements and Ramifications	286
	5.4 Development Requirements and Constraints	289
	5.5 Conclusions	291
	REFERENCES	293

ILLUSTRATIONS

Figure		Page
1-1	Study Logic, ELOR	4
1-2	Logic for Availability Analysis	6
1-3	Identifying Crew-Sensitive Functions and Elements	7
2-1	Apollo/ELOR Design Reference Mission Plan	10
2-2	Functional Flow Logic, Top-Level Lunar Exploration Missions	12
2-3	Second-Level Functional Flow, 6.0 - Perform Lunar Area Operations	13
2-4	Third-Level Functional Flow, 6.8 - CSM Unattended Operations	15
2-5	Third-Level Functional Flow, 6.10 - Perform LM Storage Operations	16
2-6	Third-Level Functional Flow, 6.11 - Conduct Lunar Base Operations	17
2-7	Third-Level Functional Flow, 6.18 - Transfer Crew to CSM	19
2-8	Third-Level Functional Flow, 6.19 - CSM Departure Preparations	23
2-9	Space Mission Maintenance Activities and Considerations	25
2-10	Top-Level Timeline, ELOR Mission	27
2-11	Second-Level Timeline, CSM Lunar Area Operations, ELOR Mission	28
2-12	Second-Level Timeline, LEM Lunar Area Operations, ELOR Mission	29
2-13	Effects of Dormancy Concept on the Probability of Safe Return, No Maintenance or Repair	46
2-14	Cabin Depressurization/Pressurization Rates, Apollo CSM	53
2-15	Carbon Dioxide Concentration as a Function of Removal Function Downtime	56
3-1	Recommended ELOR Spacecraft Configuration as Modified from Apollo Block II (SD RTG Concept)	65
3-2	Recommended ELOR Command Module Modifications (SD RTG Concept)	67
3-3	Modification for Alternate ELOR Apollo SM (Fuel Cell Concept)	75

Figure		Page
3-4	General Arrangement, Three-Man, Ninety-Day Lunar Module	77
3-5	Inboard Profile, Three-Man, Ninety-Day Lunar Module	79
4-1	CSM Electrical Power System Block Diagram, Functional Level	87
4-2	EPS Crew Safe-Return Logic	91
4-3	Apollo CSM Environmental Control System for ELOR	94
4-4	Reliability Diagram for Apollo ECS in Semiactive Status for Ninety-Day Unmanned ELOR	103
4-5	G&N ΔV Modes	106
4-6	G&N Earth Entry Mode	107
4-7	Proposed ELOR Stabilization System (ESS), Dormant Mode Only	118
4-8	Proposed ELOR Sun Sensor, Location, and Characteristics	119
4-9	ELOR Quiescent-Phase Stability Control Reliability Logic	121
4-10	Modified ESS and Resulting Reliability Logic	122
4-11	Baseline ELOR Communications and Data Subsystem	133
4-12	Baseline ELOR C&D Subsystem Reliability Logic Diagram	138
4-13	Up-Data Link, Function Requirements	144
4-14	Reliability Tree, Up-Data Link	147
4-15	Central Timing Equipment, Functional Block Diagram	149
4-16	Estimated CSM Power Requirements in Lunar Orbit (LMSC Estimates)	162
4-17	Electrical Power Plant System (EPP) Schematic With SM EPS Radiator Cooling	164
4-18	PC8B-1 Cell Schematic	165
4-19	Bootstrap Start Data for PC8B-1 Power Plant	169
4-20	Reaction Control System Schematic, Service Module (SM RCS)	175
4-21	Positive Expulsion Tank Assembly	176
4-22	Positive Expulsion Tankage, Functional Block Diagram	177
4-23	Reaction Control Engine Reliability as a Function of Usage	179
4-24	Service Module Reaction Control Quad Reliability Logic	182
4-25	Command/Service Module Propulsion System Schematic	184
4-26	Reliability Logic Diagrams for Engine Start and Steady-State Operations	185
4-27	Reliability Logic Diagram for Engine Shutdown Operations and Cost Periods	186
4-28	Reliability Logic, Propellant Gaging Function	191

Figure		Page
4-29	Antenna Subsystem (DSA), Reliability Logic for Full-Time Operation	194
4-30	ELOR Mission LM ECS Flow Diagram	205
4-31	Environmental Control Subsystem, Atmosphere Revitalization Section	207
4-32	RTG Heat Pipe	210
4-33	Vehicle Thermal Profile, Storage Phase	211
4-34	Reliability Logic Diagram, LM-ECS, Heat-Transport Loop Modified for ELOR	214
4-35	Primary Guidance and Navigation Subsystem Block Diagram	217
4-36	Apollo LM Communications Functional Diagram	227
4-37	Proposed LM CSS Configuration and Interfaces for ELOR Mission (Preliminary)	231
4-38	LM Vehicle Quiescent-Phase Checkout Configuration	235
4-39	LM/CM Command/Data Link	238
4-40	Typical Thermal Shield Support A/S Cabin	248
4-41	Three-Man, Ninety-Day LM Quiescent-Storage Power Profile for One Lunation (28 Days), RTG/Battery Configuration	257
4-42	Three-Man, Ninety-Day LM Stored Energy Requirement Versus RTG Output Power	258
4-43	SNAP-27 Power Supply	259
4-44	Generator, Heat-Receiver Configuration	262
4-45	Proposed LM Quiescent-State Solar Array	264
4-46	Candidate Descent Propulsion Tank Designs	269
4-47	Tank Feed Line Modification	270
4-48	Tank Helium Line Modification	271
5-1	Assessing ELOR Mission Safety	272
5-2	ELOR Mission Safe Return as Affected by Design Concept and Stay-Time	285
5-3	ELOR Vehicle Development Program	290

TABLES

Table		Page
2-1	New Mission Functional Requirements	30
2-2	CSM System Functional Requirements, Ninty-Day Storage in Lunar Orbit	32
2-3	LM System Functional Requirements, Ninety-Day Storage on Lunar Surface	33
2-4	Lunar Shelter Functions, CSM and LM for ELOR	34
2-5	CSM Function Duty Cycle Estimates, Operating Time in Hours	36
2-6	LM System Function Duty Cycle Estimates, Operating Time in Hours	43
2-7	Abort Criteria, CSM Dormant in Lunar Orbit	49
2-8	Orbit Criteria, LM Stored on Lunar Surface	49
3-1	Command Module Recommendations and Effects Summary	69
3-2	Service Module Recommendations and Effects Summary	71
3-3	Lunar Module Ascent Stage Recommendations and Effects Summary	81
3-4	Lunar Module Descent Stage Recommendations and Effects Summary	82
4-1	Entry Electrical Power, Critical Components Analysis	90
4-2	Development Status of ECS Components Added to the LOR Configuration	104
4-3	(Part I) CM G&N System Functional Profile for Boost, Transit, and Entry	109
4-3	(Part II) CM G&N System Equipment Usage Times Based on ELOR Functional Requirements	110
4-4	CM G&N System Failure Rates	111
4-5	CM G&N System Mission Probability of Success, Normal Apollo Operational Concepts	112
4-6	CM G&N ELOR Mission Probability of Success, Modified Standby Operations	113
4-7	CM G&N System P_s as a Function of Various Sparing Elements	114

Tables | Page

4-8 CM G&N System Subassembly Reliability Breakdown, Operation Only, LM Components as Spares for Return Trip 114
4-9 Summary of CM G&N System Reliability, Improvement Steps 115
4-10 ELOR Stabilization System Tradeoffs 123
4-11 Apollo Block II C&D Subsystem Equipments 137
4-12 ELOR C&D Subsystem Reliability Improvement Analysis 139
4-13 C&D System Status 141
4-14 Gross Failure Modes and Effects ELOR-ELS 155
4-15 Results of Reliability Analysis 156
4-16 Fuel Cell Assembly Relative Unreliability (Allis-Chalmers Data) 171
4-17 Engine Reliability for Discrete Duty Cycles 180
4-18 Estimates of Component Reliability for All Periods of SPS Engine Firing 187
4-19 Meteoroid Shielding Analysis, 90-Day ELOR CSM 197
4-20 LM Quiescent-Phase Temperature-Control Requirements 208
4-21 LM G&N System Equipment Usage Times Based on ELOR Functional Requirements 219
4-22 LM G&N System Failure Rates 221
4-23 LM G&N ELOR Mission Probability of Success, Normal Apollo Operational Concepts 221
4-24 LM G&N System Probability of Success, Breakdown With Spares 222
4-25 Summary of LM G&N System Reliability 223
4-26 LM Communication Functions Per Mission Phase 226
4-27 Quiescent-State Monitoring Points, Bit Requirements, LM Vehicle 233
4-28 PCM Low Bit Rate 236
4-29 LM CSS Component Criticality 243
4-30 Summary of ELOR Communications P_a Alternatives . . 244
4-31 Electrical Energy Requirements, Descent Stage LM . . 254
4-32 Three-Man, 90-Day Quiescent LM Requirements for Electrical Power (LM QEPS) 255
4-33 Alternate RTG LM EPS Weight Estimates 256
4-34 Weight Estimates for the Fuel-Cell System 265
4-35 Alternative LM QEPS Tradeoff Data 266
5-1 Command Module Requirements for Crew Safe Return Assurance 279

Tables | Page

5-2 Service Module Recommendations for Crew Safe Return Assurance 280
5-3 LM Ascent Stage Requirements for Crew Safe Return Assurance 283
5-4 LM Descent Stage Requirements for Crew Safe Return Assurance 285
5-5 ELOR Concepts Weight Comparison 287

LIST OF ABBREVIATIONS

This foldout presents the abbreviations and symbols that are general in character and used throughout the report.

Those abbreviations and symbols that relate to specific subsystems are covered by foldouts at the end of the sections on major spacecraft modules.

GENERAL ABBREVIATIONS

NASA	National Aeronautics and Space Administration
OART	Office of Advanced Research and Technology
NR	North American Rockwell Corporation
SD	Space Division of NR
LMSC	Lockheed Missiles and Space Co.
ELOR	Extended Lunar Orbital Rendezvous (Mission) Used to refer to this study.
DRM-2A	Design Reference Mission of Apollo. 2A is the number of a particular DRM.
KSC	Kennedy Space Center
MTC	Maintenance Time Constraint
M&R	Maintenance and Repair
GSE	Ground Support Equipment
EVA	Extravehicular Activities
MSFN	Manned Space Flight Network
SC	Spacecraft
FMEA	Failure Mode Effects Analysis
MTBF	Mean Time Before Failure
MCBF	Mean Cycles Between Failures
MTTR	Mean Time to Repair
ISM	In-Space Maintenance
P_{90}	Probability of 90-Day Stay and Safe Return.
P_S	Probability of Safe Crew Return.
P_a	Probability of an Abort Occurring.
RTG	Radioisotope Thermoelectric Generator
R	Reliability
AES	Apollo Extension System
AAP	Apollo Applications Program
CSM	Command Service Module as Integrated Unit
CM	Command Module
Systems of CM	
EPS	Electrical Power System

ECS	Environmental Control System
G&N	Guidance and Navigation System
SCS	Stability Control System
C&D	Communications and Data System
RCS	Reaction Control System
UDL	Up-Data Link
CTE	Central Timing System
ELS	Earth Landing System
SM	Service Module
Systems of SM	
EPP	Electrical Power Plant
RCS	Reaction Control System
SPS	Service Module Propulsion System
ADSA	Apollo Deep-Space Antenna
CS	Cryogenic Storage System
CSMS	Command and Service Module Structure
LM	Lunar Module
LM-AS	Lunar Module Ascent Stage
Systems of LM-AS	
AEP	Ascent Stage Electrical Power
ECS	Environmental Control System
G&N	Guidance and Navigation
SCS	Stability Control System
RCS	Reaction Control System
CS	Communications and Status System
APS	Ascent Propulsion System
LM-DS	Lunar Module Descent Stage
Systems of LM-DS	
QEP	Quiescent Electrical Power
DPS	Descent Propulsion System
DSS	Descent Stage Structure

1. INTRODUCTION

1.1 BACKGROUND

The extended space mission has been the subject of many studies, some with the moon as an objective but most involving planetary exploration. All had one thing in common: they were to be attempted well in the future. With the Apollo project nearing fruition, however, the time has come to make plans for the next major effort. Unlike Apollo, many of the system functions required for an extended mission are developed to the point where they will satisfy existing requirements. In an environment where economy is essential, logical use of available hardware is an important step in the next space mission milestone.

The key question is then "What can we do with what we have?" This study is aimed at identifying the capabilities of existing space hardware as applied to a specific extended-duration mission. Extended-mission durations are constrained by two basic factors:

1. The ability to provide required consumables in a habitable environment

2. The increasing probability of a critical malfunction

The later factor has turned out to be the dominant one for the near-term missions, particularly where efficient utilization of available technology is desired. Therefore, means of minimizing the malfunction hazard for a specific mission were given special consideration in this study.

Some of the activitiies which led to this study are:

Availability concept development—NAS9-3499 (1964-65)

Apollo Extension System Studies—NAS9-5017 NR SD and NAS9-4983, Grumman (1965-66)

Availability applied to mission systems—SD Funded (1966-67)

- Availability applied to extended-life subsystems—Subcontractor Funded (1966-1967)

- Documentation of SD and subcontractor studies—NAS2-4214 (1966-1967)

Baseline Mission Study

- Lockheed definition of the ELOR mission—NAS8-21006

In pursuance of a planetary mission study under NAS9-3499, the availability concept was developed by SD for application to extended manned missions. It provided a mechanism through which the potential malfunction could be identified during the planning stages and dealt with in the system design so that the hazard level could be reduced to any desired level.

The "availability concept" is a technique that facilitates the determination of an optimum system and mission design. This is achieved through establishment of a safe and reasonable balance among system and mission performance, reliability, maintenance, operability, and controlled utilization. The result is a mission system with an exceptionally high probability that its functions will be available when and where required. The logic of this analytical technique is presented in Figure 1-2 of Volume I.

The extended lunar orbital rendezvous (ELOR) mission seems to present an economical candidate when compared with the more ambitious lunar or planetary missions. The Lockheed Missiles and Space Company (LMSC) studied an improved lunar cargo and personnel delivery system (NAS8-21006) which resulted in the definition of the ELOR mission. It provides for a three-man crew on the lunar surface for up to 90 days. The crew is to be housed in a direct lander shelter and the CSM and LM are to be dormant with a minimum of functions operating. The hardware requirements are based on maximum use of existing systems and minimum development cost.

As in the contract NAS2-4942 effort, SD studies indicate that the ELOR mission as a personnel carrier, together with one of several logistic missions, provide an attractive combination for extended lunar explorations using a minimum of new hardware. The subject of this study is the ELOR personnel carrier.

1.2 PURPOSE AND OBJECTIVES

This study was conducted to establish the feasibility of the ELOR concept as a personnel delivery system for post-1975 lunar exploration programs.

It is to define the system hardware used from the Apollo program, identify new development requirements, define the recommended operational concept, and identify the associated support requirements. Uninhibited use of maintenance and repair technology is considered where it is considered both desirable and feasible within the constraints established by the basic design. Modifications were to be held to an absolute minimum.

Specifically, the objectives included —

1. Testing the feasibility of extended duration manned space missions through application of the availability concept to mission/system designs.

2. ELOR mission capability using contemporary hardware (Apollo command, service, and lunar modules).

3. Development of a quantitative assessment of the following factors as they affect achievement of a probability of safe return of 0.99:

   a. Space mission extension capability as a function of the operational concept and through the application of maintenance and repair.

   b. The quantity of maintenance and repair actions to be expected and prepared for.

   c. The type of maintenance and repair actions required of the crew as they affect extravehicular activities.

   d. The weight penalty imposed on the mission system by the necessity of having to perform maintenance actions or by added redundancy.

   e. The optimum operational concept as it affects crew safe return.

   f. The effects of potential design improvements.

4. Determination of the ramifications of the recommended concept into the development program.

1.3 STUDY APPROACH

The study was conducted as indicated by the study logic of Figure 1-1. A systems engineering approach was selected, even though subsystem requirements were defined by the LMSC effort. A detailed independent analysis was

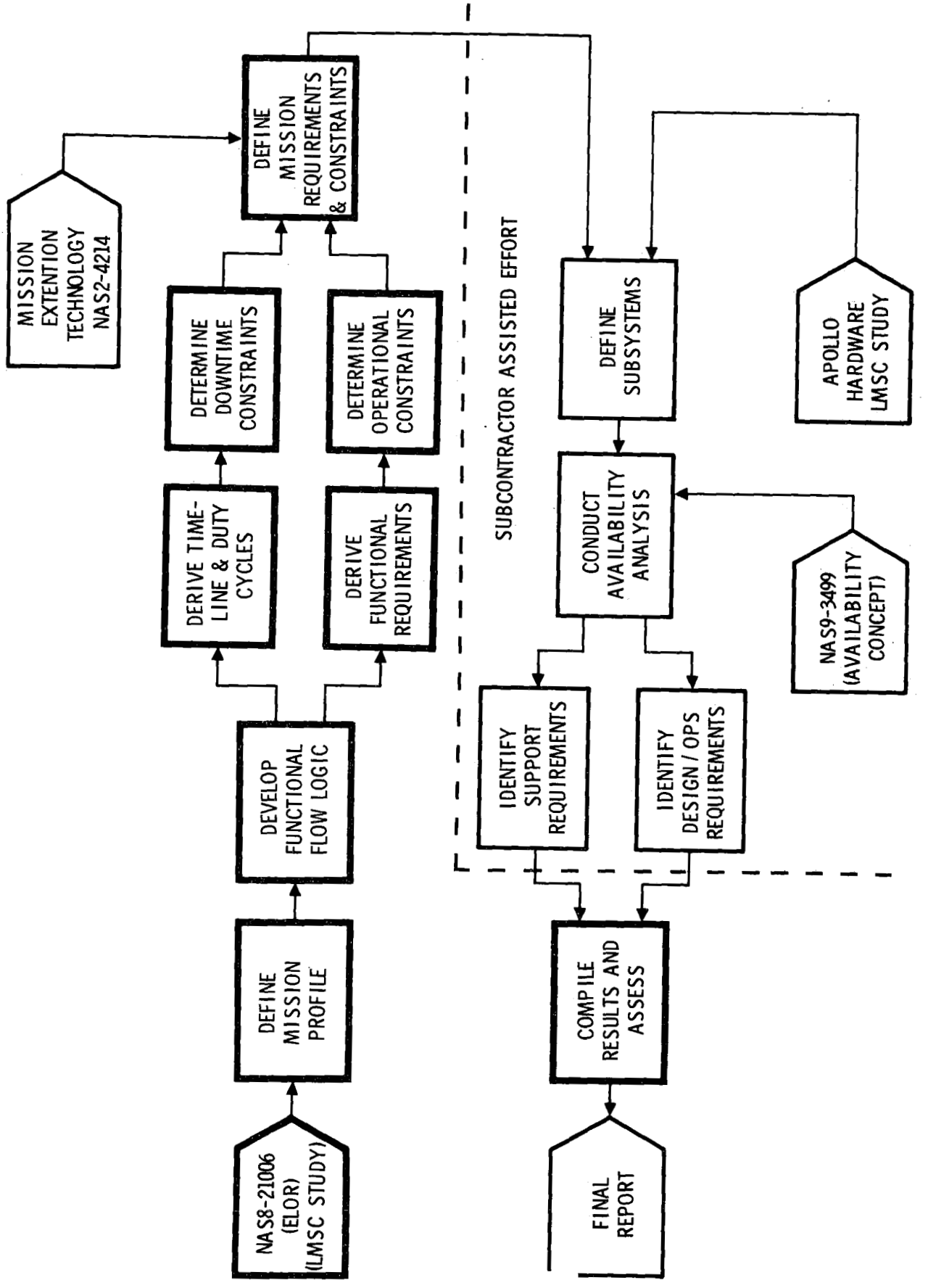

Figure 1-1. Study Logic, ELOR

accomplished through the functional flow process. As a result, functional requirements were derived by mission phase from which duty cycles, downtime, and operational constraints were defined. The Apollo design reference mission (DRM-2A) provided much of the required data.

These data, together with the data from the former SD study (NAS2-4214), permitted a complete definition of the mission requirements and constraints; however, only the lunar area operations were stressed, since all other Phases are the same as the Apollo mission.

The subcontractors previously listed were given these data and requested to —

1. Define the subsystem design details.
2. Conduct the availability analysis as defined by the logic in Figure 1-2. The crew-sensitive functions are identified and treated as illustrated in Figure 1-3.

Upon completion of the subcontractor analysis and that conducted by SD, the subsystem data were compiled and reassessed in terms of the effects on the overall mission. A final concept was recommended and the support requirements defined.

1.4 GROUND RULES AND ASSUMPTIONS

The study was based on the LMSC study "LOR Personnel Delivery, 3 Men up to 90 days, Operational 1975" mission as conducted under NAS8-21006 and reported in June 1968 preliminary report.

Data generated under NAS2-4214 (Reference 1-1) was used to establish crewmen capability, systems logic, maintenance technology, and potential alternate solutions. In addition, much of the systems data therein is directly applicable to the support requirements definition.

The following assumptions were applied;

1. The mission actually provided 90 days in the lunar area (a worst case condition for operating systems).
2. The Apollo profile (DRM-2A) was applicable to all mission phases except those in the lunar area.
3. A lunar shelter was already successfully landed reasonably near the LM site (within 1000-foot radius).
4. Abort may be required at any time and is only constrained by the rendezvous window or the transearth injection window.

5. Design goals must equal or exceed Apollo criteria.

6. Maintenance and repair were permitted where an identified requirement existed.

7. Existing hardware must be used to satisfy new functions required where possible.

8. The CSM was parked in a lunar orbit and rotates around the roll axis which is maintained perpendicular to the suns rays.

9. The LM and shelter could be anywhere on the lunar surface.

10. The recommended LMSC designs (NAS8-21006) could be changed or replaced where safety assurance could be improved.

11. The Apollo hardware was considered qualified for the DRM-2A.

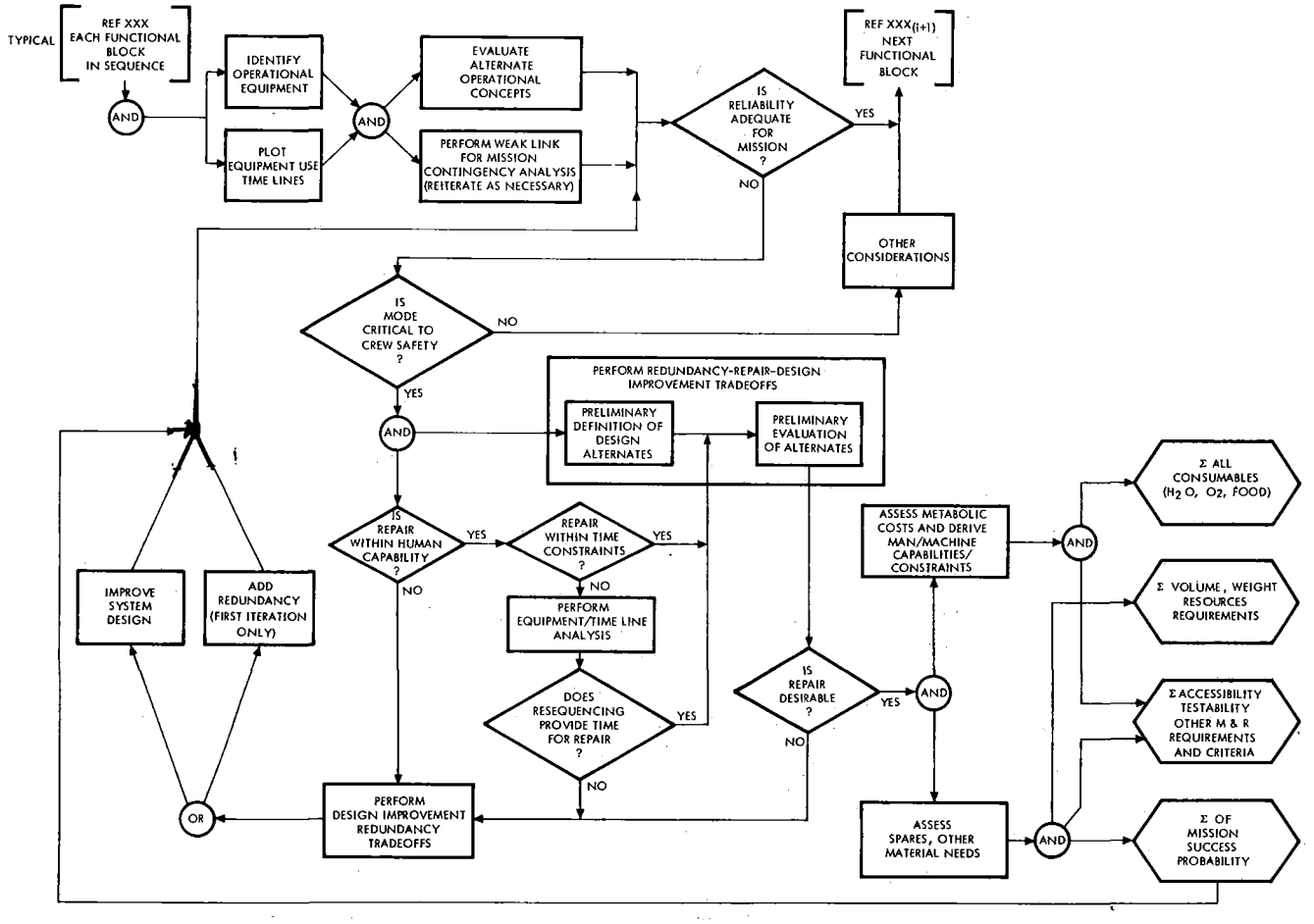

Figure 1-2. Logic for Availability Analysis

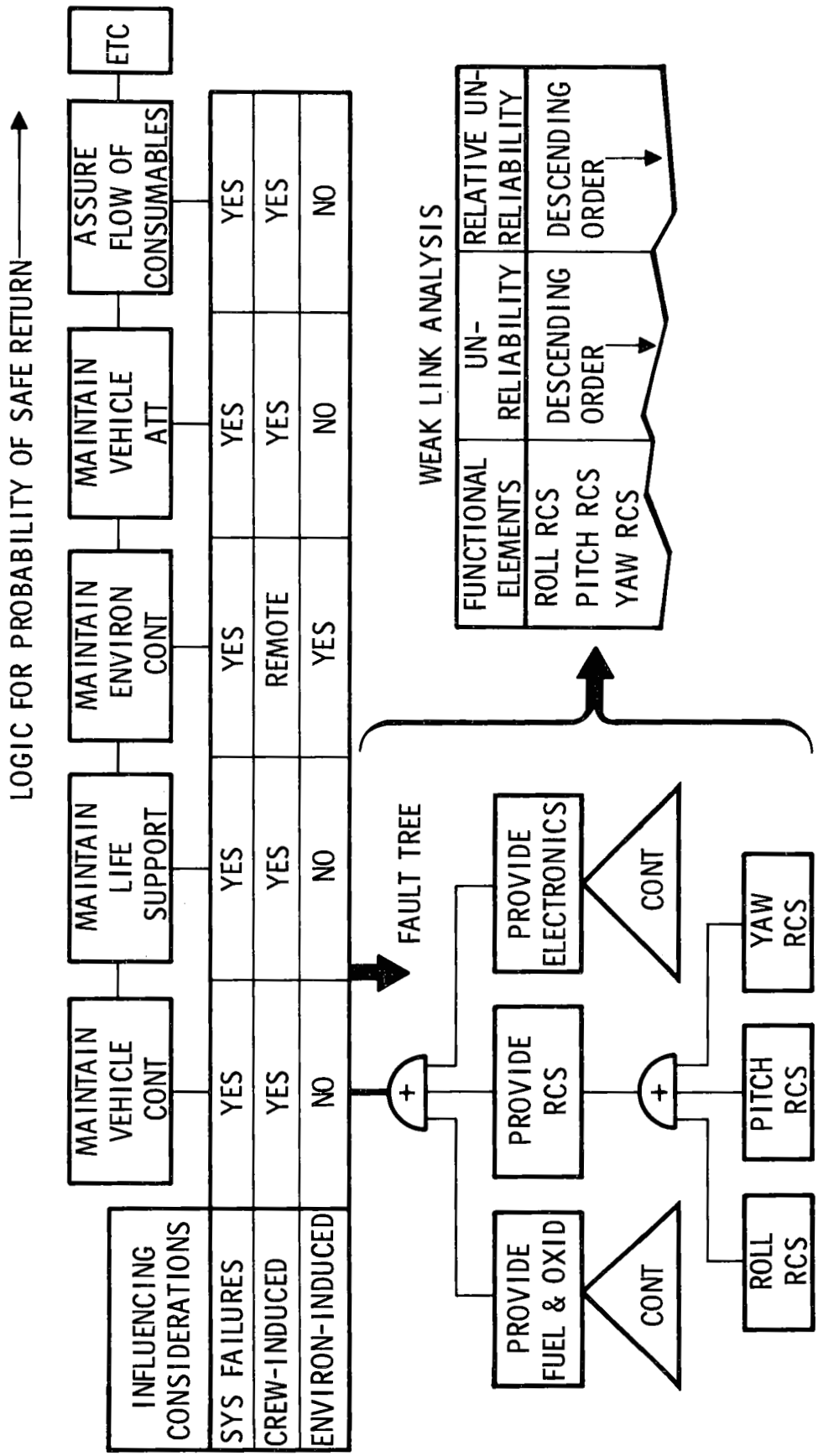

Figure 1-3. Identifying Crew - Sensitive Functions and Elements

2. MISSION REQUIREMENTS AND CONSTRAINTS

2.1 ELOR MISSION DESCRIPTION

The ELOR mission will be conducted in much the same manner as the usual Apollo LOR mission in all phases except those in the lunar area. From lunar orbit injection to transearth injection, the missions profile will be somewhat different. A caricature of the proposed mission profile is presented in Figure 2-1. The Apollo design reference mission, DRM-2A (Reference 2-1) was used as the baseline.

2.1.1 The Design Reference Mission

The mission begins with the rollout of the Saturn V space vehicle from the KSC Vertical Assembly Building approximately 20 days prior to liftoff. Like the Apollo lunar mission, DRM-2A, a parking orbit of approximately 100 nautical miles is first established. Translunar injection establishes a free-return circumlunar trajectory. After as many as three midcourse corrections and approximately 61-1/2 hours later, the lunar orbit insertion results in a polar orbit of approximately 80 nautical miles above the lunar surface.

After approximately 3-1/2 orbits of about 2 hours each, the LM with the three astronauts aboard separates from the CSM and initiates transfer orbit insertion approximately 23 minutes later. After coasting to pericynthion the powered descent is initiated at approximately 1-3/4 minutes prior to touchdown on the lunar surface. The outbound leg is completed after a total of three days.

The LM remains on the lunar surface for the entire time the crew is on the surface. During the Apollo Mission, one man remains with the LM. During the ELOR Mission, it is immediately placed in a quiescent mode.

Following the liftoff and powered ascent burn of the LM ascent engine, three transfer maneuvers and two midcourse corrections, all using LM-RCS, are used to bring the LM to the terminal rendezvous maneuver, which begins about 2-1/4 hours after lunar liftoff. Manual takeover for LM docking begins approximately 25 minutes later, and final LM-CSM contact occurs. The docking maneuver is completed within a single orbit if the launch and rendezvous windows coincide, otherwise some phasing may be required. During the next orbit, the LM is jettisoned, and transearth injection is accomplished during the subsequent orbit.

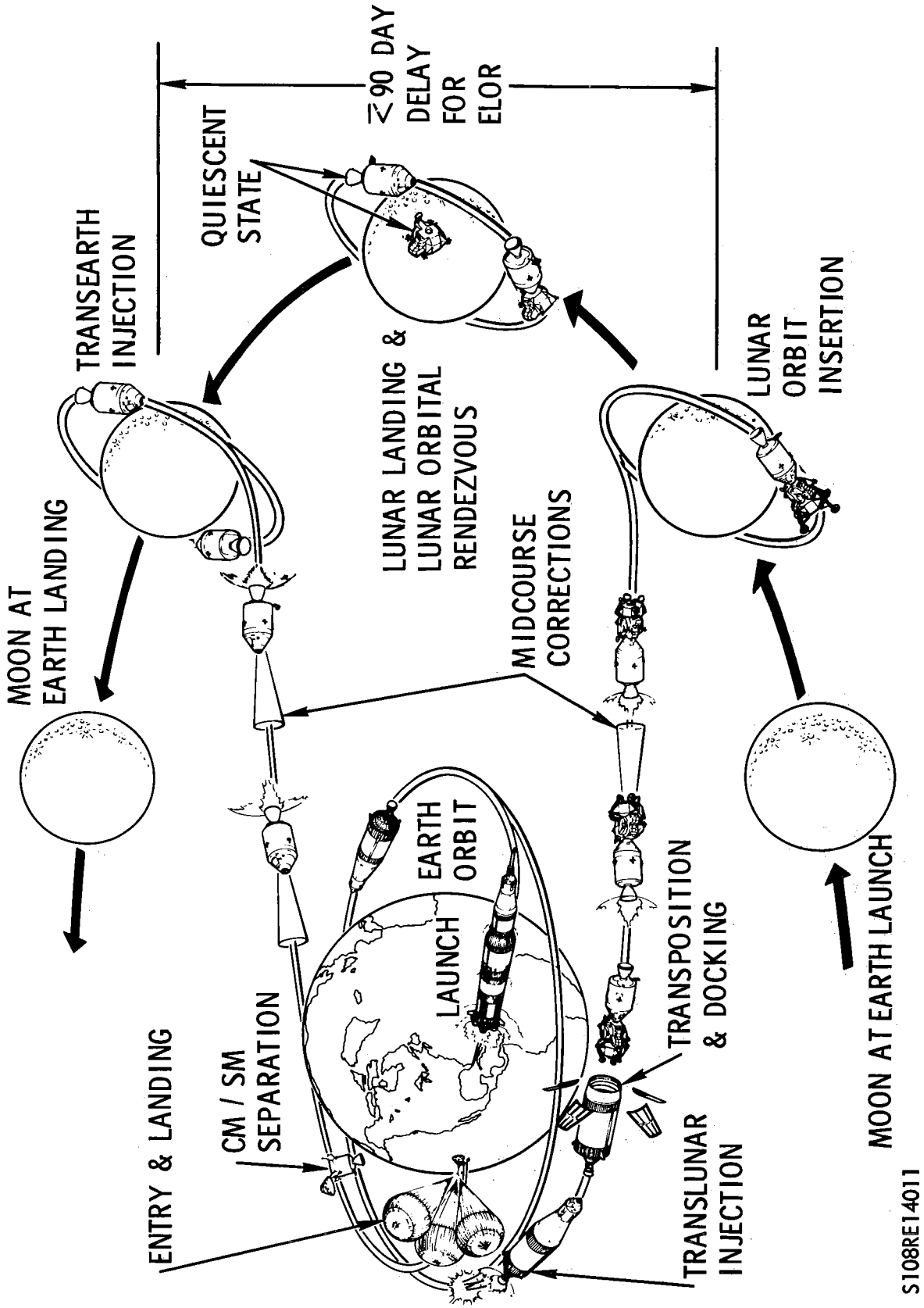

Figure 2-1. Apollo/ELOR Design Reference Mission Plan

The transearth coast phase has a duration of approximately 88 hours. During this phase, up to three midcourse corrections may be accomplished. Entry occurs when the command module attains an altitude of approximately 400,000 feet above the earth's surface. The drogue parachutes are deployed 12 minutes later and splashdown occurs about 15 minutes later. A nominal pickup of the command module takes place one hour later, thus completing the lunar landing mission.

2.1.2 ELOR Mission Peculiarities

The area of particular concern in this study is the lunar area operation, Function 6.0 of Figure 2-2. These operations are expanded to the second and third levels in Figures 2-3 through 2-7. ELOR operations in the lunar area call for placing the CSM in a quiescent mode (Function 6.2, Figure 2-4) in an 80-nautical-mile lunar polar orbit and all three crewmen descending to the lunar surface in a modified LM in the same manner as for Apollo.

Prior to leaving the CSM, the crew will don their spacesuits and set up the CSM for the quiescent mode. These conditions call for the spacecraft to have a minimum of system functions operating. The situation is to simulate the shelf or storage conditions the subsystems were designed for, prior to installation in the spacecraft. Under these conditions, available reliability data will provide an accurate measure of the dormant-time effects.

The CSM conditions recommended include the following:

1. Internal temperature limited to between +40° and +100° F.

2. Internal pressure limited to about 0.5 psia.

3. Even external heating/cooling.

4. No extreme uncontrolled motion.

To satisfy the last condition, it is recommended that the CSM be placed in a slow spin mode around the roll axis (axis of symmetry), which should be perpendicular to the sun's rays to assure even heating of all exposed surfaces.

Upon arriving on the surface, the crew will place the LM in its dormant state, not to be reoccupied until departure, except in an emergency. These activities are described by Function 6.10 and depicted in Figure 2-5.

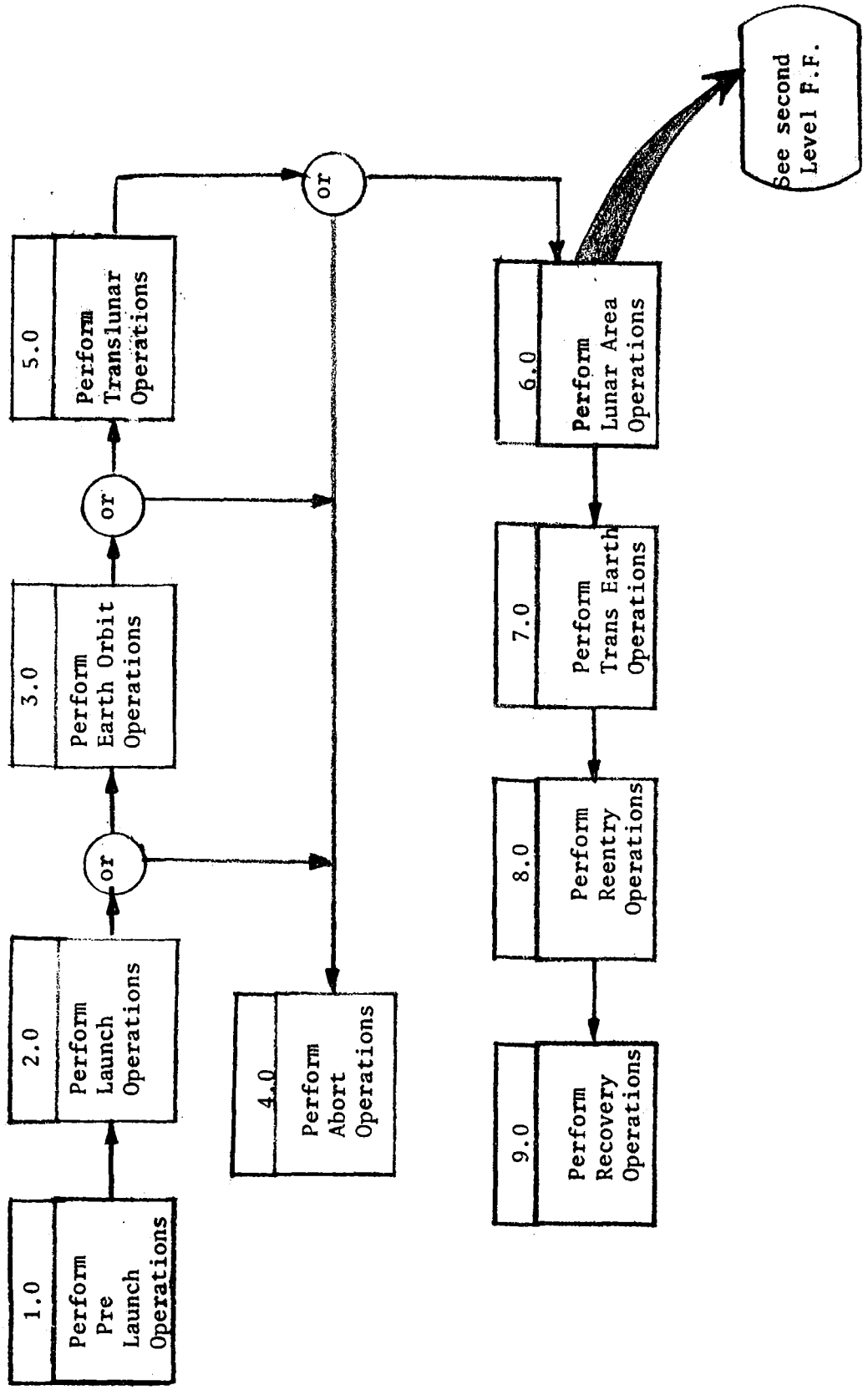

Figure 2-2. Functional Flow Logic, Top-Level Lunar Exploration Missions

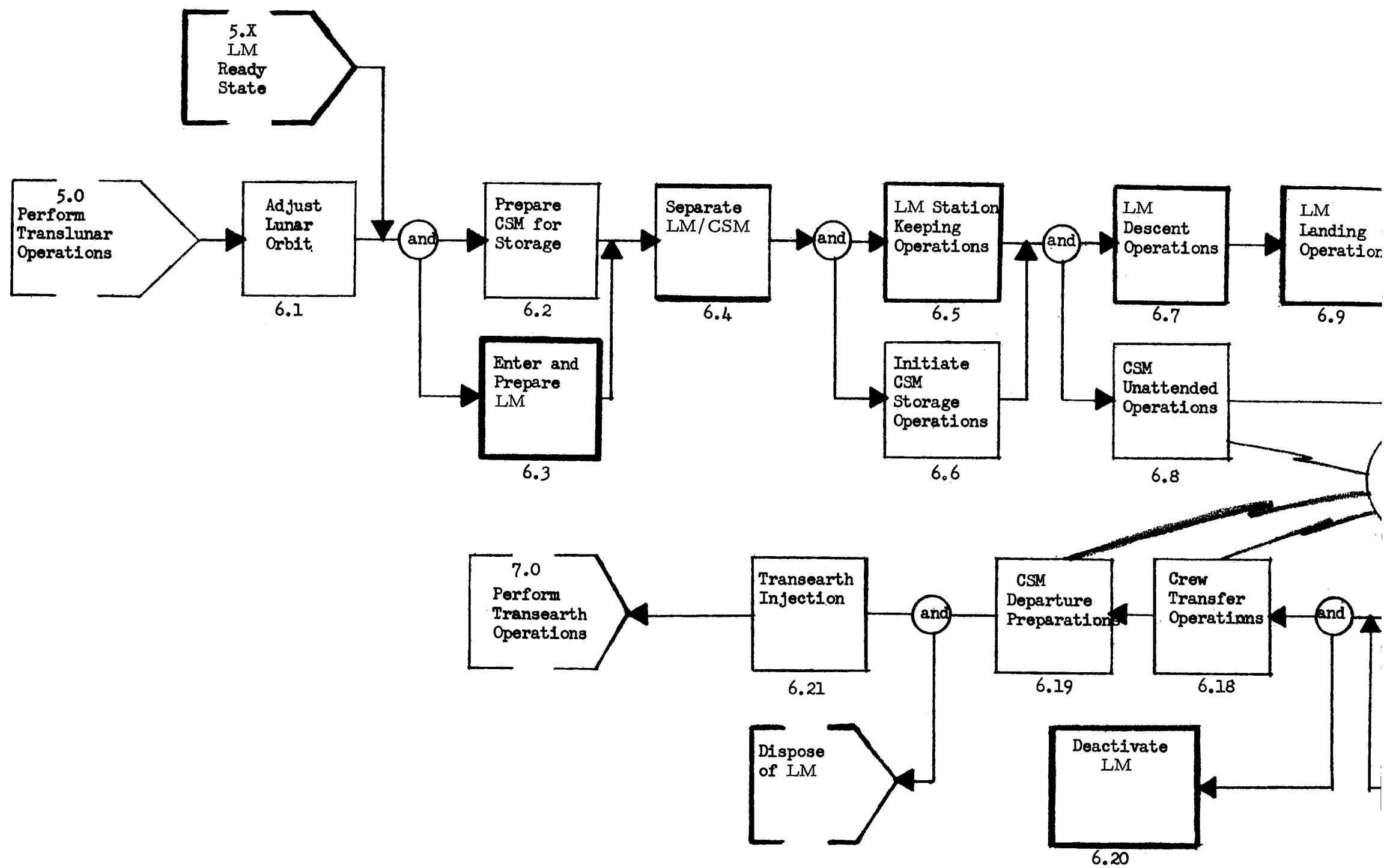
5.X
LM
Ready
State
5.0
Perform
Translunar
Operations
Adjust
Lunar
Orbit
6.1
and
Prepare
CSM for
Storage
6.2
Enter and
Prepare
LM
6.3
Separate
LM/CSM
6.4
and
LM Station
Keeping
Operations
6.5
Initiate
CSM
Storage
Operations
6.6
and
LM
Descent
Operations
6.7
CSM
Unattended
Operations
6.8
LM
Landing
Operation
6.9
7.0
Perform
Transearth
Operations
Transearth
Injection
6.21
and
CSM
Departure
Preparations
6.19
Crew
Transfer
Operations
6.18
and
Dispose
of LM
Deactivate
LM
6.20

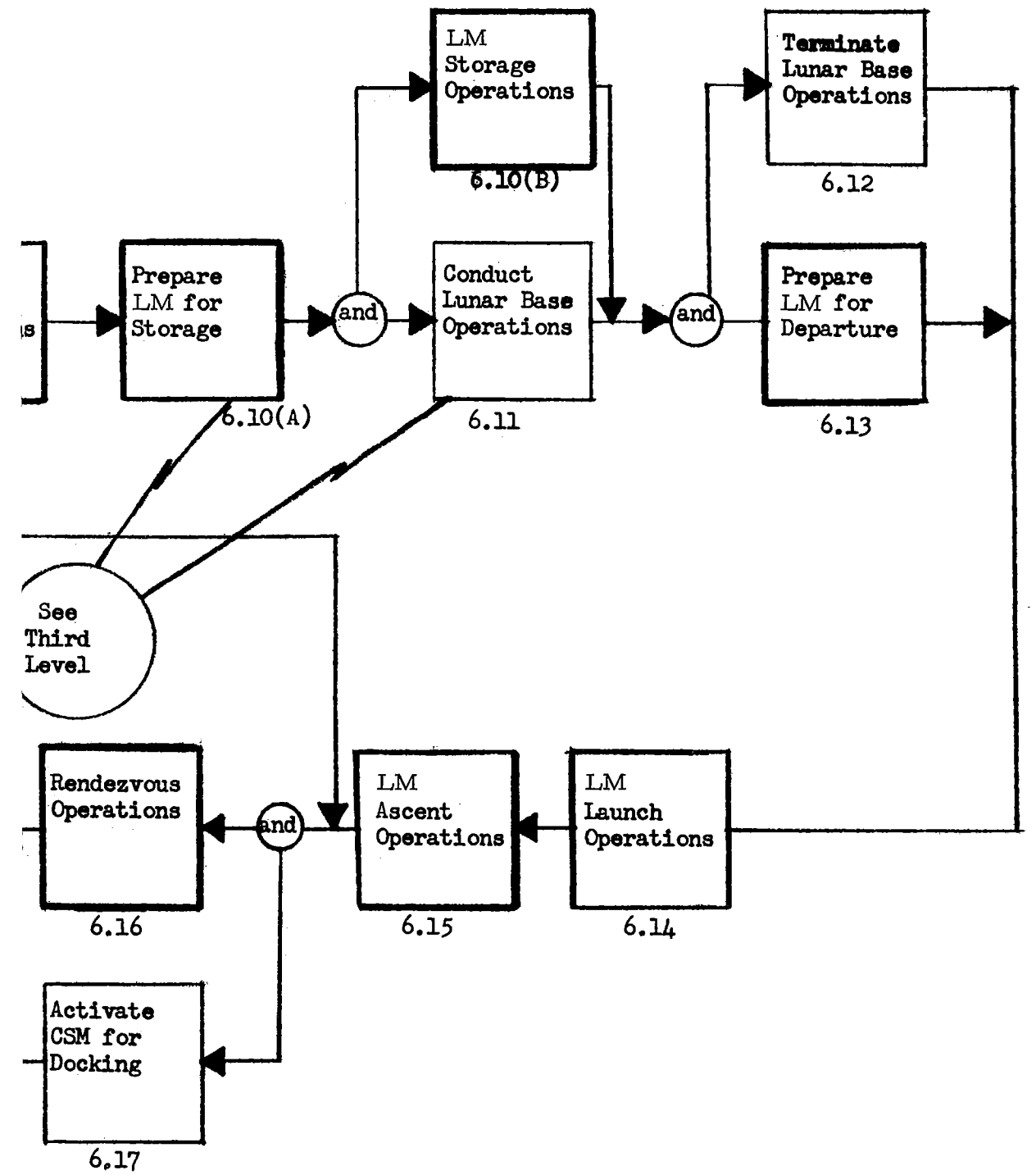

Figure 2-3. Second-Level Functional Flow, 6.0 - Perform Lunar Area Operations

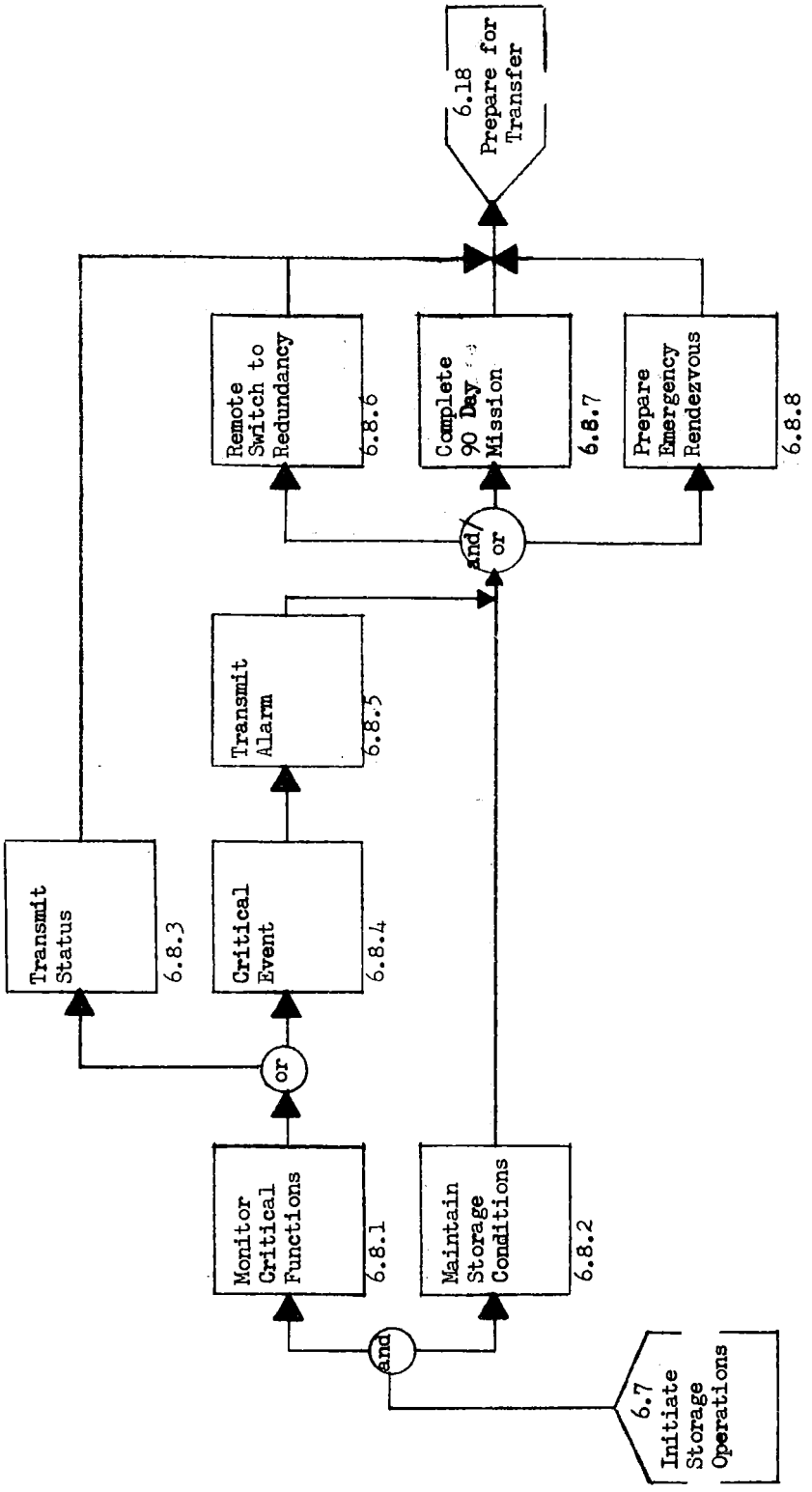

Figure 2-4. Third-Level Functional Flow, 6.8 - CSM Unattended Operations

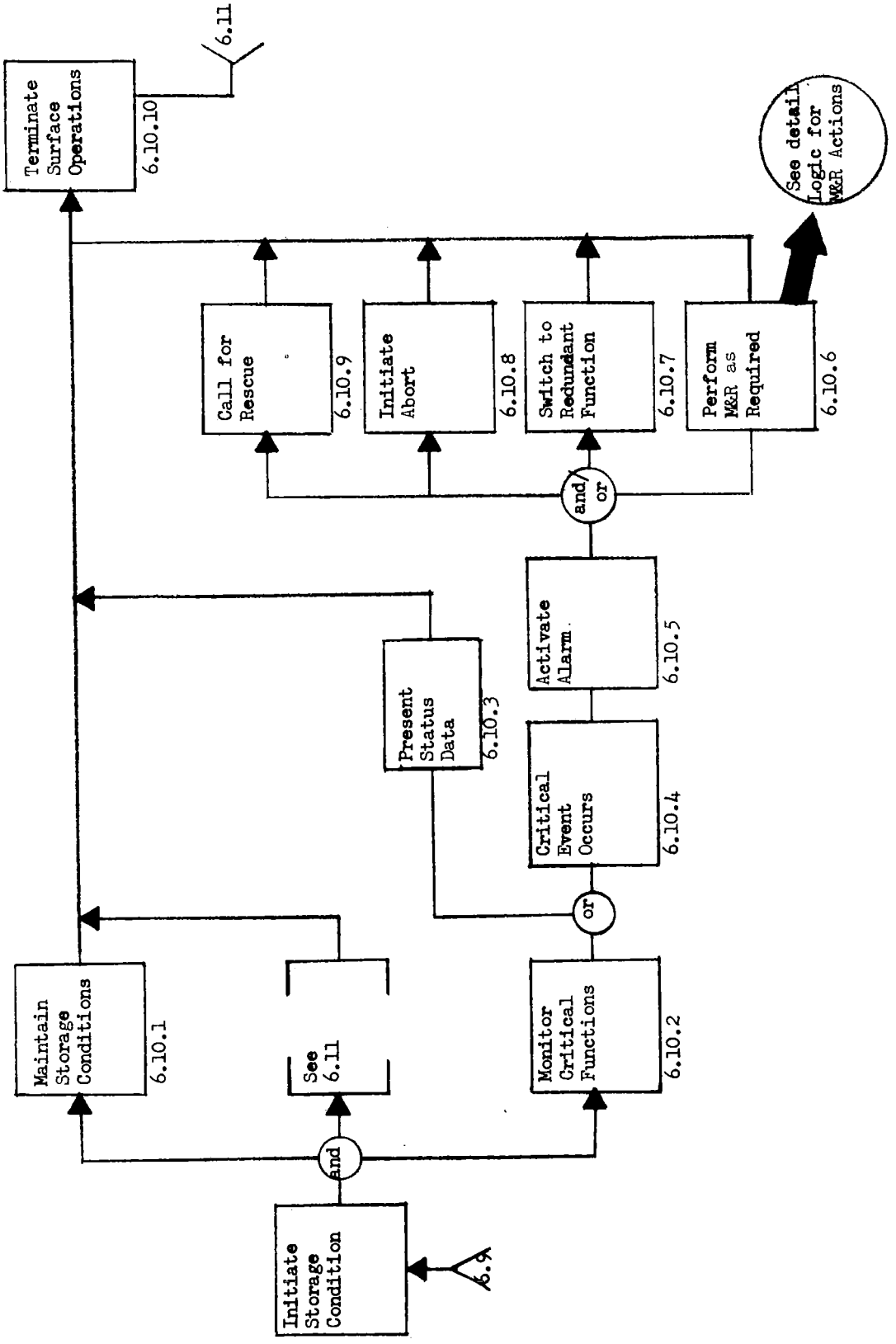

Figure 2-5. Third-Level Functional Flow, 6.10 - Perform LEM Storage Operations

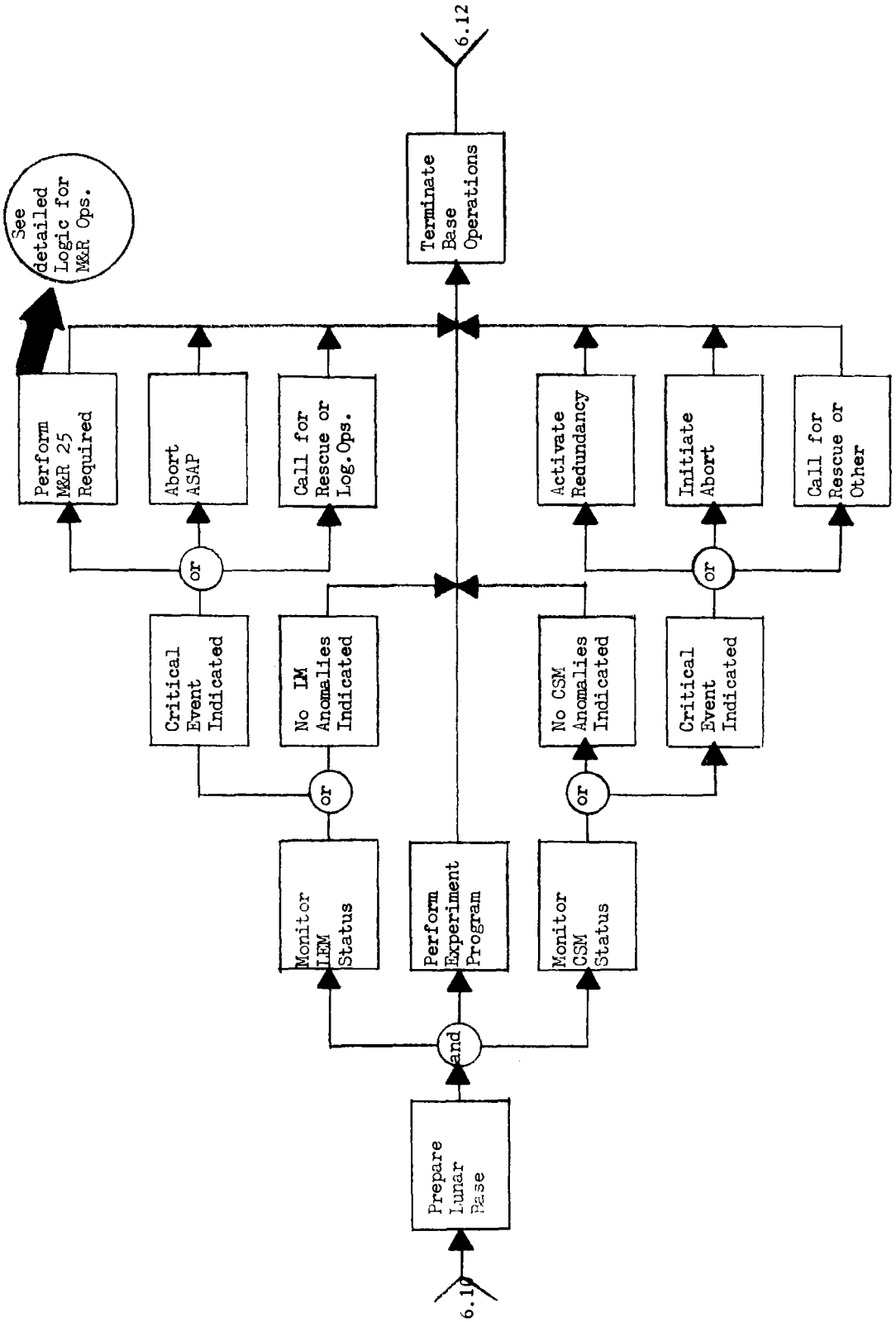

Figure 2-6. Third-Level Functional Flow, 6.11 - Conduct Lunar Base Operations

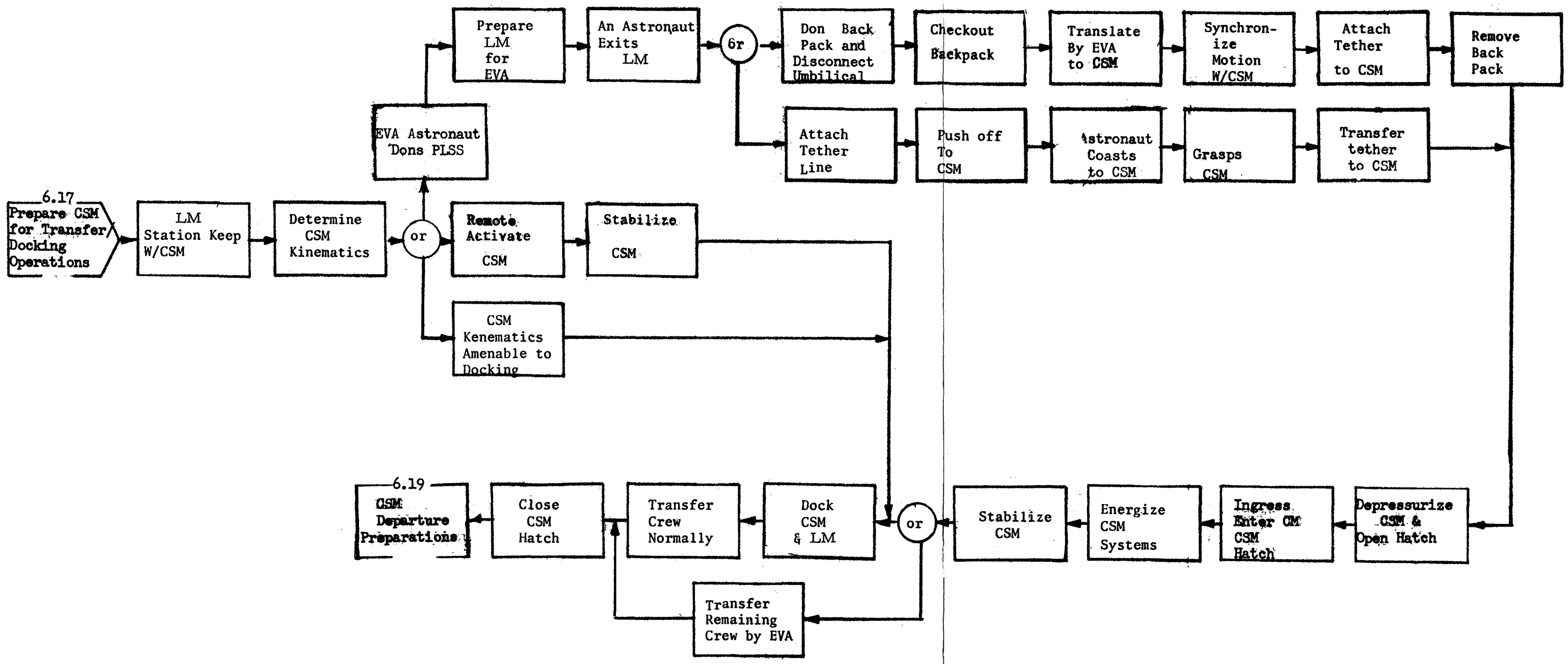

Figure 2-7. Third-Level Functional Flow, 6.18 - Transfer Crew to CSM

The LM stored state is in some respects less severe on the systems than that of the CSM, because no stability control is required in the LM; however, the extreme contrast between the lunar-day heat and the lunar-night cold could present other problems. The LM storage calls for –

1. Internal temperature limited to between +40 and +100 F.

2. Internal pressure limited to about 0.5 psia.

3. Prevention of fuel freezing.

Upon leaving the LM, the crew will make provisions for monitoring its status, then move to, and activate, the lunar shelter.

The lunar shelter is planned to be sent ahead by direct lander. The stay-time on the surface is to be up to 90 days, shortened only if some unforeseen event requires abort. Abort requirements associated with the lunar shelter malfunctions or the exploration program are considered beyond the scope of this study; however, the supporting functions are presented in Figure 2-6.

One additional requirement pertains to abort capability: The LM will be ready to abort as required, limited only by the constraints imposed by the CSM/LM rendezvous window and any maintenance action considered to be a necessary part of the mission concept. Former studies indicate the actual limit will be imposed by the rendezvous window for any nonequatorial landing site. Use of a lunar polar orbit is recommended, since any point on the surface can be reached by a Saturn V mission; however, the rendezvous windows may be as small as 1.5 hours in length and limited to two in any 30-day period.

The stay-time on the lunar surface is to continue to 90 days if no situation occurs that cannot be circumvented by crew action and/or earth-based command. To facilitate notification of impending emergency, a status monitor and alarm system is required for both the orbiting CSM and the stored LM. These functions need only evaluate a few operating functions, the quiescent conditions, and control system. They must indicate when the environmental conditions have exceeded their respective boundary values and/or when those functioning elements are degrading to the point where failure seems imminent.

Studies and tests have shown (Reference 2-2) that it is safer and that it leads to a more reliable mission when the systems are left off until they are required. In some cases, this operational concept depends on maintenance and repair (M&R) actions to reestablish normal operations after the extended downtime in time to meet the mission commitment. Given that

time is allowed for M&R activity prior to LM launch and/or CSM transearth injection, this operational concept should introduce no deleterious effects on mission success or crew safety. The CSM and LM status will be assessed periodically, at least once a day; and if malfunctions occur during the lunar stay time on either the CSM or LM, every attempt will be made to offset the effect of the failure by use of the command link to the CSM or M&R action on the LM. Where these actions can satisfy the abort or safety criteria, it is anticipated that no abort will be attempted; in fact, M&R may be a safer alternative, particularly for the LM.

At the end of the 90-day stay-period, or sooner if abort is required, the 3-man exploration party will shut down the lunar shelter operations and return to the LM, conducting the functions as indicated in Figure 2-3. The first operation will involve activation and checkout of the LM; any critical malfunctions are to be corrected (where possible) prior to launch. Provisions for the required spares must be made in the LM or in conjunction with lunar shelter. These provisions are identified in Section V of this report.

The remainder of the LM mission to the point of rendezvous is expected to progress as normally planned for Apollo except for a potential wait in a lunar phasing orbit to permit compensation for gross differences in the CSM/LM orbital parameters. After the LM rendezvous with the CSM (Function 6.16), however, there may be considerable difference in the required activities. The subsequent events depend on the kinematic state of the CSM and the ability of the LM crew or MSFN to control it via the command link. The alternatives are presented in Figure 2-7.

If the CSM is stabilized as planned, a normal docking operation will be accomplished; however, if it remains in the spin mode or is in uncontrolled motion, other alternatives as indicated must be attempted. Failure to gain access to the CSM would require rescue from earth and the available time would greatly limit this alternative. Indications are that the CSM would not be undergoing any severe motion. Under the expected conditions, either the LM could synchronize with the CSM, or the EVA crewman could probably gain access and/or arrest any motion to permit completion of the docking operation.

Once the crew has transferred to the CSM, all the fuel cells will be started up and other CSM functions subsequently activated and checked out as indicated in Figure 2-8. In the event of any malfunctions, four alternatives could be considered; however, for the purposes of this study M&R is considered the most logical alternative where possible. The considerations involved are presented in Figure 2-9 and will be discussed in detail under a subsequent section.

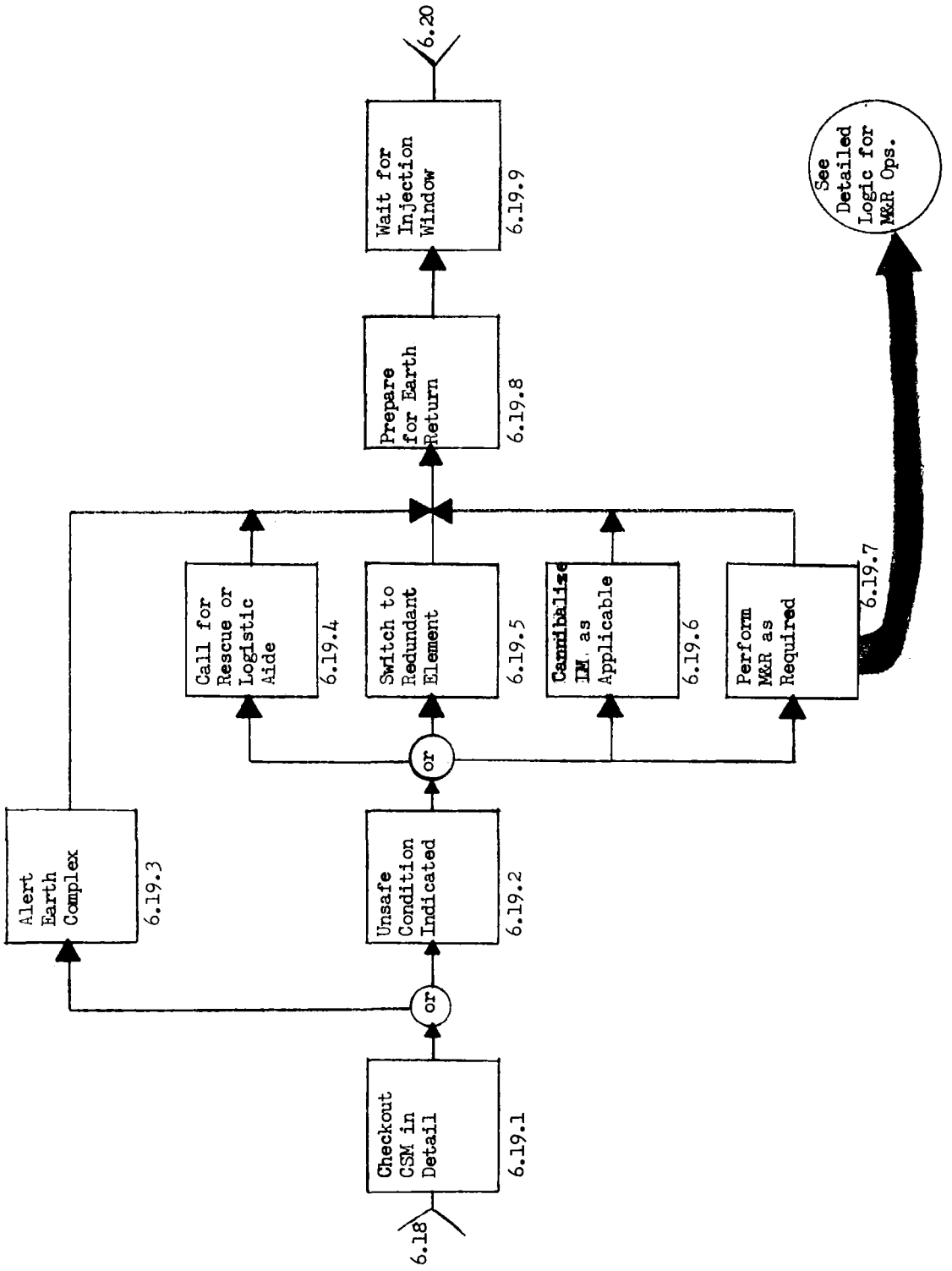

Figure 2-8. Third-Level Functional Flow, 6.19 - CSM Departure Preparations

Once the CSM has been checked out and/or restored to normal operating conditions, the LM can be jettisoned. Transearth injection (6.21) will be accomplished as in the DRM when the injection window is properly aligned. The mission subsequently will be completed as in the DRM.

2.2 MISSION TIMELINE

The mission has been described in the prior section; the significant events are very much like those for Apollo except in the lunar area. Event timing provides the data necessary to identify specific functional requirements and the associated duty cycle.

Figure 2-10 provides the top-level mission timeline, while Figures 2-11 and 2-12 present the second- and third-level of activities for the CSM and LM, respectively, within the lunar area operations. The phase duration for operations within the lunar area are based on their maximum expected value, since such factors as descent, launch, and rendezvous windows can vary from hours to days depending on the selected site. In any case, it was assumed that the maximum time to be spent in the lunar area, Function 6.0, would not exceed 90 days.

2.3 MISSION SYSTEM FUNCTIONAL REQUIREMENTS

NOTE: It was assumed that the mission functional requirements for all phases, exclusive of lunar area operations, 6.0, have been satisfied by the existing Apollo systems and will remain substantially unchanged.

As previously indicated, the systems engineering approach to definition of systems requirements has been applied to this study. It facilitates a logical approach to the definition of systems requirements. The results of this analysis are tabulated by mission phase in Table 2-1, along with an assessment of the potential source of the hardware that may satisfy these requirements. Again, only the new phases were assessed. These functional requirements are then grouped by conventional system designation and vehicle in Tables 2-2, 2-3, and 2-4.

2.3.1 The CSM Functional Requirements

For the most part, the following functions are additions, modifications, or reapplications of the functions already existing within the CSM subsystems. (Numbers in parenthesis refer to Table 2-2.)

(1) The stability control function will provide limited control of the CSM during the quiescent mode. Constraints are established by such factors as external temperature and resulting uneven heating, limits on uncontrolled motion, the need to communicate with the earth and lunar party, and LM

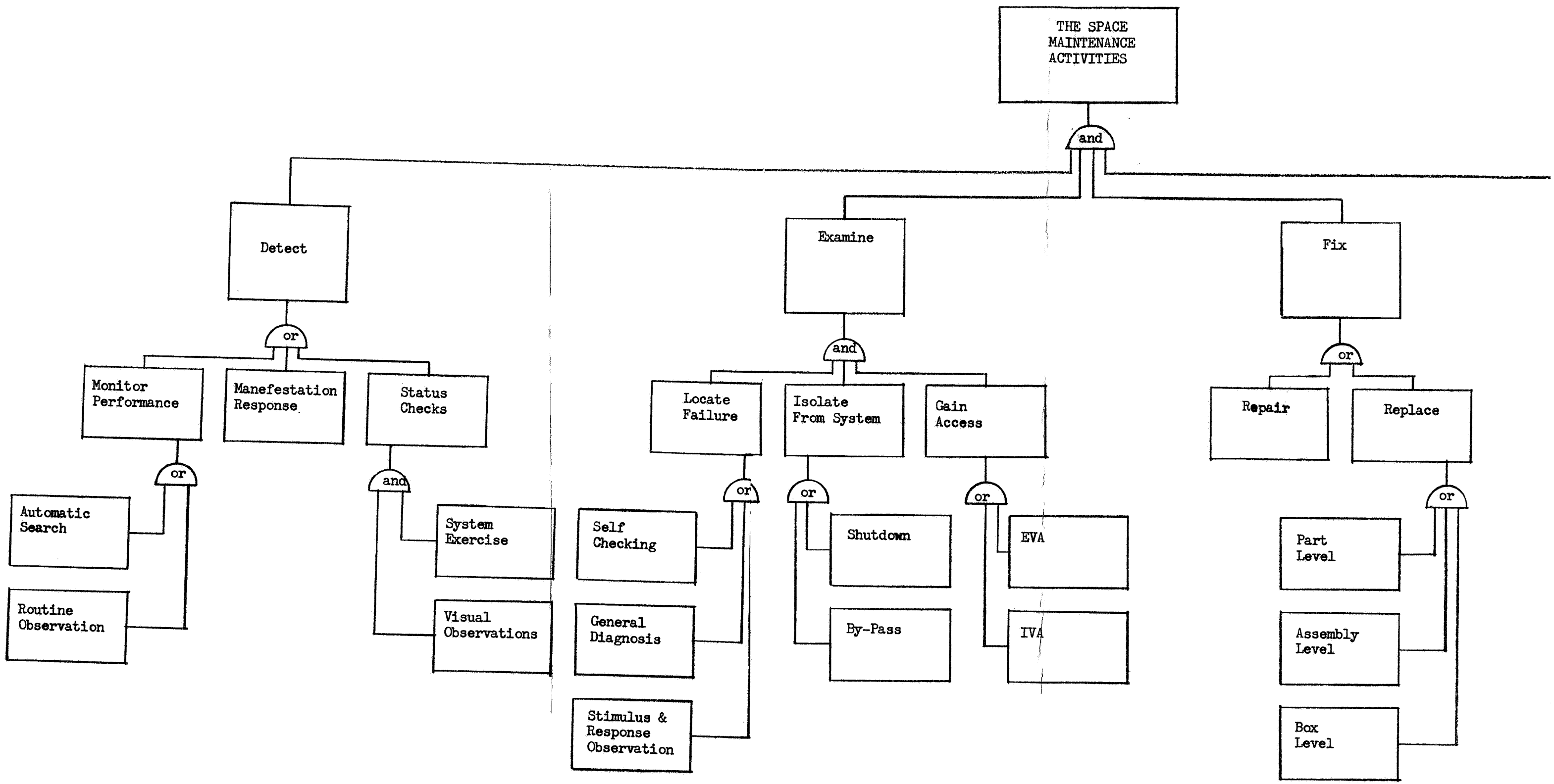
THE SPACE MAINTENANCE ACTIVITIES
and
Detect
or
Monitor Performance
Manefestation Response
Status Checks
or
Automatic Search
Routine Observation
and
System Exercise
Visual Observations
Examine
and
Locate Failure
Isolate From System
Gain Access
or
Self Checking
General Diagnosis
Stimulus & Response Observation
or
Shutdown
By-Pass
or
EVA
IVA
Fix
or
Repair
Replace
or
Part Level
Assembly Level
Box Level

Figure 2

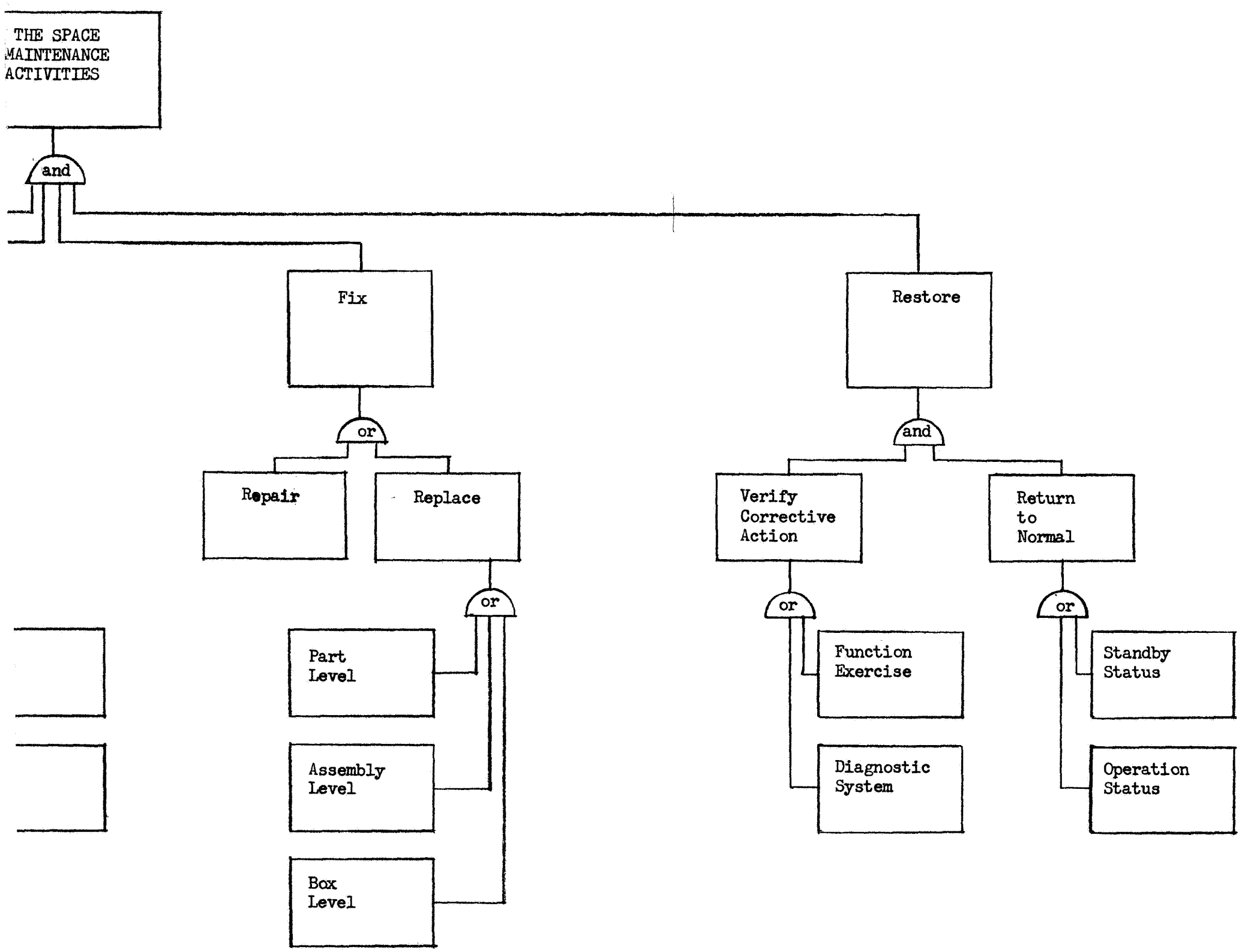

Figure 2-9. Space Mission Maintenance Activities and Considerations

Mission Time	Mission Event	Phase No.	Mission Phase	Phase Duration
-400.000	Begin Preflight Operations	1.0	Preflight Operations	400.000
0.000	Liftoff	2.0	Ascent	0.190
0.190	Attain Earth Orbit	3.0	Earth Orbit Operations	1.491
1.681	Translunar Insertion SPS Cutoff	5.0	Translunar Operations	61.710
63.391	LUnar Orbit Insertion SPS Cutoff	6.0	Lunar Area Operations	2208.845
2272.236	Transearth Insertion SPS Cutoff	7.0	Transearth Operations	88.155
2360.391	Begin Entry	8.0	Entry	0.297
2360.688	Touchdown	9.0	Recovery	20.000

Figure 2-10. Top-Level Timeline, ELOR Mission

Mission Time	Sub Phase Event	Sub-Phase No.	Mission Sub Phase	Sub Phase Duration
63.4	Lunar Orbit Insertion SPS Cutoff			
		6.1	Adjust Orbit	2.2
65.6	Begin Transfer			
		6.2	Transfer Operations	3.5
69.1	Separate from CSM			
		6.4	Separation & Clear	0.2
69.3	Begin CSM Storage Initiation			
		6.6	CSM Storage Initiation	1.4
70.7	Complete CSM Storage Initiation			
		6.8	CSM Unattended	2195.9
2266.6	Begin CSM Activation			
		6.17	CSM Activation	1.0
2267.6	Docking Complete			
		6.18	Transfer Operations	0.5
2268.1	Transfer Complete			
		6.19	TEI Preparation	4.0
2272.1	TEI SPS Ignition			
		6.21	Transearth Injection	0.1
2272.2	TEI SPS Cutoff			

Figure 2-11. Second-Level Timeline, CSM Lunar Area Operations ELOR Mission

Mission Time	Phase Event	Sub-Phase No.	Mission Sub Phase	Sub Phase Duration
63.4	LOI SPS Cutoff			
		6.1	Adjust Orbit	2.2
65.6	Begin LEM Preparation			
		6.3	Prepare LEM	3.5
69.1	Separate From CSM			
		6.4	Separation & Clear	0.2
69.3	Begin Station Keeping			
		6.5	Station Keeping	1.4
70.7	Begin Descent			
		6.7	Descent	1.2
71.9	Touchdown			
		6.9	Landing	0.1
72.0	Begin Storage Preparation			
		6.10A	Storage Preparation	1.0
73.0	Set Storage Conditions			
		6.10B	Storage Operations	2187.5
2260.5	Begin Departure Preparations			
		6.13	Departure Preparation	4.0
2264.5	Begin Launch Operations			
		6.14	Launch Operations	1.0
2265.5	Liftoff			
		6.15	Ascent	1.1
2266.6	Attain CSM Orbit			
		6.16	Rendezvous	1.0
2267.6	Docking Complete			
		6.20	Deactivate & Jettison	4.6
2272.2	TEI SPS Cutoff			

Figure 2-12. Second-Level Timeline, LEM Lunar Area Operations, ELOR Mission

Table 2-1. New Mission Functional Requirements (Sheet 1 of 2)

Mission Phase	Functional Requirement	Potential Function Source
6.5, LM station-keeping operations	1. Monitor CSM system status	New
	2. Exercise CSM remote controls	New
	3. Observe CSM response	LM/CSM
	4. Set CSM for storage mode	New
	5. All other functions - normal	LM
	6. Third-man support	New
6.6 Initiate CSM storage functions	1. Relay CSM status to LM	Apollo/new
	2. Respond to LM commands	Apollo/new
	3. Provide storage control	Apollo/new
6.7 LM descent operations	1. Monitor CSM status	New
	2. All other functions - normal	LM
	3. Third-man support	New
6.8 CSM unattended operations	1. Course stability control	Apollo/new
	2. Internal temperature limiting	Apollo
	3. External temperature limiting	Apollo
	4. Status assessment	Apollo/new
	5. Status relay to LM	Apollo/new
	6. Status relay to Earth	Apollo/new
	7. Internal pressure limiting	Apollo
	8. Malfunction alarm	New
	9. Redundancy control	Apollo/new
	10. Increased environment protection	Apollo/new
	11. Minimum electrical power	Apollo
	12. Remote E. P. control (start op.)	Apollo/new
6.9 LM landing operations	1. Third man support	New
	2. Increased landing ΔV	LM/new
	3. All other functions	LM
6.10 Prepare LM for storage and LM storage ops.	1. Internal pressure limiting	LM
	2. Internal temperature limiting	LM
	3. Status assessment	LM Existing or Modified
	4. Status relay to lunar base	
	5. Malfunction alarm	
	6. Redundant critical functions	LM
	7. Electrical power (descent)	
	8. External temp. limiting (calibration)	New
	9. Maintenance and repair provisions	New
6.11 Lunar base operations (CSM and LM support only)	1. Lunar base shelter	Not a part of this study
	2. CSM comm. link	
	3. CSM status display	
	4. LM link*	
	5. LM status display*	
	6. CSM command link	
	7. Critical events alarm	
	8. Maintenance and repair support for LM	
	9. Earth communications link	
6.12 Terminate lunar base operations	1. CSM status display	Not a part of this study
	2. CSM command link	
	3. Earth communications link	

*These may be handled as a part of the LM and Visual Inspections

Table 2-1. New Mission Functional Requirements (Sheet 2 of 2)

Mission Phase	Functional Requirement	Potential Function Source
6.13 Prepare LM for departure	1. Proper temperature restoration 2. CSM status display 3. CSM location/trajectory 4. Normal LM functions	New/LM New/LM LM LM
6.14 LM launch operations	1. CSM position/timing 2. Normal LM functions 3. Third man support	LM/new LM LM/new
6.15 LM ascent operations	1. CSM position/timing 2. Normal LM functions 3. Third man support 4. Increased ΔV capability	New New Mod, LM
6.16 Rendezvous operations (LM)	1. CSM command link 2. CSM status display 3. Normal LM functions	New New LM
6.17 Prepare CSM for docking	1. LM/CSM command link 2. Remote stability control change 3. Remote position/velocity control* 4. Internal temperature limiting 5. Minimum electrical power 6. Internal pressure limiting 7. Malfunction alarm 8. Redundancy control (remote)	New New New Apollo/new Apollo Apollo/new New New
6.18 Crew transfer operations	1. Close stability hold (remote control) 2. Minimum electrical power 3. EVA support systems 4. EVA manuevering unit 5. Normal Apollo/LM functions 6. CSM provisions for EVA transfer	Apollo/new Apollo Apollo New Apollo/LM Apollo/new
6.19 CSM departure preparations	1. Normal CSM functions 2. Maintenance and repair capability 3. CSM/LM interchangeability 4. Wait-in-orbit capability 5. Update/regenerate computer memory	Apollo New Apollo/LM/new New Apollo/new
6.20 Deactivate the LM	None required	
6.21 Transearth injection	No change from Apollo	Apollo II

*These may be handled as a part of the LM and Visual Inspections

Table 2-2. CSM System Functional Requirements, Ninety-Day Storage in Lunar Orbit

System/Function	Requirements and Constraints
1. Stability control	(1) Limit spacecraft instability to the safe limits for the onboard equipment (2) Provide required stability for docking operation. (3) Permit use of orbit to surface and Earth comm. links. (4) Control orientation with respect to sun for temp. cont.
2. Internal temperature control	(1) Limit temp. excursions on cabin wall to between +100°F to +40°F wall tempe. rature (2) Assure water-glycol temp. is within sage limits; i. e., does not freeze. (3) Assure protection of stable platform (IMU), which is considered temperature sensitive, even when
3. External temp. control (heat-shield and RCS)	(1) Assure even barbequing of heat shield to avoid unwarranted stress and ready access through hatch. (2) Assure RCS engines and fuel lines do not freeze.
4. Pressurization of cabin	Maintain minimum required atmospheric pressure to prevent decomposition of spacecraft materials through outgassing and sublimation, about 0.5 psia.
5. Status assessment	(1) Assess cabin pressure. (2) Assess temperature in critical areas and systems. (3) Assess S/C kinematics. (4) Assess heat shield temperature in critical areas. (5) Assess power plant status. (6) Assess fuel reserves, RCS, O_2, H_2, et. al. (7) Provide for critical function failure alarm.
6. Remote control capability	(1) Switch between redundant systems and functions thereof where critical. (2) Provide attitude and stability control for the docking function. (3) Provide emergency control of orbital position and plane. (4) Initiate a predet. checkout or diagnostic routine on command.
7. Lunar orbit to surface link	(1) Relay alarms to crew in time to facilitate abort. (2) Relay status of systems critical to safety to earth and to surface crew.
8. Electrical power supply	(1) Provide electrical power for operating systems during storage, 1.3 to 2.5 (LMSC data). (2) Be capable of remote start up to full power for rendezvous or in case of an impending failure of an operating unit during the storage cycle. (3) Indicate when failure is imminent or probable. (4) Minimum 2000 hours life.
9. Maintenance and repair support	(1) Diagnostic routines to isolate failures in critical system functions. (2) Spares complement to support repair of identified failures. (3) Tools. (4) EVA support system. (5) Ability to use LM system components.
10. Special facilities (EVA support)	(1) Easy access to CM interior by one EVA crew member, unassisted. (2) Ready access to O_2 supply via an umbilical at point of ingress. (3) Handholds on spacecraft exterior.
11. Up-data reception	(1) Update and/or regenerate guidance computer memory. (2) Provide link for remote control (command link) (a) from earth, (b) from LM, (c) from lunar shelter (3) Provide timing data from earth.
12. Increased environment protection	(1) Meteoroid hazard. (2) Radiation hazard. NOTE: All others same as Apollo.

Table 2-3. LM System Functional Requirements, Ninety-Day Storage on Lunar Surface

System/Function	Requirements and Constraints
1. Remote control of CSM	(1) Provide ability to control the CSM position in active rendesvous from LM. (2) Provide control of storage control systems. (3) Provide ability to remotely control stability for CSM passive rendezvous.
2. Crew transfer aids	(1) Provide EVA umbilical for preparatory activity. (2) Provide tether, reel, and disconnect at LM. (3) Provide personnel life support system to handle the EVA phase for about 1 hour at a higher work level. (4) Provide EVA manuevering unit or a method of capturing the uncontrolled CSM.
3. CSM status monitor	Provide minimum monitoring of CSM status for safety of crew for rendezvous operations, ascent, and descent. Provide alarm as required.
4. Command link	Provide link to relay remote control commands to CSM during LM descent or ascent.
5. Provisions for third man	(1) Seating arrangement. (2) Structural support. (3) Fuel and consumables. (4) ECLS functions.
6. Electrical power	Continuous electrical power at 100 to 200 watts level.
7. Internal temperature control	(1) Limit excursions to between +40 to 100 F. (2) Assume greater protection of temperature-sensitive equipment.
8. Internal pressure control	Limit pressure loss to not less than 0.5 psia.
9. External temperature control	(1) Limit aft equipment rack temp. to between +40 and +100 F. (2) Prevent RCS engine freezeup, or provide for thawing. (3) Prevent fuel tank freezeup, or provide for thawing.
10. Maintenance and repair support	(1) Spares required. (2) Diagnostic routine. (3) Tools. (4) CSM/LM component interchangeability. (5) Ready access to failures.
11. CSM tracking/locator	Knowledge of Apollo position without use of Apollo systems (only earth data).
12. Data link	(1) Memory restoration data from earth. (2) Timing data from earth.

Table 2-4. Lunar Shelter Functions, CSM and LM for ELOR

System/Function	Requirements and Constraints
1. CSM status readout	(1) Provide an indication of the status of critical orbiting CSM systems on at least a go-no-go basis. (2) Provide an alarm system when the abort criteria have been compromised.
2. Alarm systems	Provide a method of notifying all lunar party personnel of impending emergency/abort requirements created by CSM or LM failures.
3. Remote control of CSM	(1) Provide remote control of CSM redundant functions for those critical to CSM integrity and crew safe return. (2) Provide ability to start up systems required for rendezvous. (3) Provide startup control of the electrical power source.
4. Command link	Provide link to facilitate remote control of items under (3) above.
5. LM Status	Monitor LM quiescent control by hard line, data link, or visual inspections.

recovery. The LMSC study (Reference 1.2) suggests spinning the CSM about the roll axis within a 20-degree cone, the center line of which is perpendicular to the sun's rays. This study confirms that this may be the only safe mode of operation. A complicating factor is introduced by the need to maintain communication with the lunar surface party, the LM in transit, and the Earth; however, these requirements may be satisfied by an earth link only. The antenna orientation affects the required input power and a trade-off decision between the high-gain antenna and its stability/orientation requirement and the input gain/bandwidth product.

(2) Internal temperature control should be available to limit the wall/equipment temperature to between about +40° and +100°F to maintain the storage conditions for which all Apollo equipment has been qualified. In addition, the water-glycol loop must not be permitted to freeze, and the IMU may have to be maintained to closer tolerances to prevent irreparable damage during the quiescent phase. During the period that S-Band equipment operates (up to one hour per day), it and the telemetry also must be cooled.

(3) External heating must be controlled to assure somewhat uniform temperatures near the back face of the heat shield to prevent the RCS engines/fuel from freezing and to prevent the space radiators from freezing or inhibiting the flow of coolant. Because ingress to the CSM may be initiated from an EVA situation, nothing can be tolerated that would inhibit the opening of the access hatches.

(4) Cabin pressurization will be allowed to drop to 0.5 psia after LM separation and then maintained at about that level until crew return and ingress. This procedure will prevent any materials from outgassing, reduce the leakage loss, and reduce the fire hazard. In fact, any leakage makeup could be provided by an inert gas such as helium or nitrogen.

(5) Status assessment is to be accomplished through use of a minimum number of sensors and a combination signal conditioner/alarm generator. The data to be assessed are described in Table 2-5. In addition to the sensors, a signal conditioner is required to assess the sensor output, convert it to digital information, and initiate an alarm if the values are outside the programmed boundaries.

(6) Remote control capability is required to control the overall operational mode of the CSM while in the quiescent state and to facilitate the return to tight stability control for the unmanned docking and separation activities. In addition, there must be some control over redundancy and any diagnostic requirement imposed by the need to identify failures and make proper use of redundancy. The control function also may be required to activate the CSM systems upon command and to initiate any required velocity change necessary to facilitate active docking when the LM is unable to perform the rendezvous action. This requirement does not include the final docking action, which involves the LM RCS.

(7) Communications link to the lunar surface and to earth must relay any alarm when the CSM is within line-of-sight of the surface party or earth MSFN and must provide the status data on at least a once-a-day basis on command from either earth or the lunar surface.

(8) Electrical power is required to operate the quiescent control systems and permit communications whenever required. Any failure must be such that it is predictable in time to take a compensating action prior to total loss. The expected power level will vary considerably depending on the quiescent control concept. Where fuel cells are recommended, those on standby must be capable of being started up from the remaining power sources; and at the end of the 90-day period, there must be sufficient power to assure a safe return trip. Conditioned power may be required at intervals during the quiescent state to operate the coolant pumps. The power source must demonstrate a life of about 2,500 hours.

Table 2-5. CSM Function Duty Cycle Estimates, Operating Time in Hours (Sheet 1 of 3)

	Stability Control					Environmental Control						Storage Control			
CSM Functions/Phases	Phase Duration	Electronics	Fuel Storage	Pressurization	RCS Engine and Feed Cycles	Control and Display	Oxygen Supply	Water Glycol	Water Management	Pressure Suit	Waste Management	Internal Temperature (Wall)	Pressure Control	Attitude/Stability Control	Electrical Power Source (Parasitic Heat)
1.0 Prelaunch	100.0	8.0	8.0	8.0	0 CY	8.0	18.0	18.0	18.0	18.0	18.0	5.0	0.5	5.0	
2.0 Ascent	0.2	0.2	0.2	0.2	0	0.2	0.2	0.2	0.2	0.2	0.0	0.0	0.0	0.0	
3.0 Earth Orbit	1.5	1.5	1.5	1.5	42	1.5	1.5	1.5	1.5	1.5	1.5	0.0	0.0	0.0	
5.0 Translunar	61.7	61.7	61.7	61.7	110	61.7	61.7	61.7	61.7	61.7	61.7	0.0	0.0	0.0	
6.0 Lunar Area	2,208.8														
6.1 Adjust Orbit	2.2	2.2	2.2	2.2	20 CY	2.2	2.2	2.2	2.2	0.0	0.2	0.0	0.0	0.0	0.0
6.2 Transfer	3.5	0.5	3.5	3.5	44	0.5	3.0	3.5	0.0	1.5	0.5	0.5	0.5	0.1	0.1
6.4 Separate	0.2	0.2	0.2	0.2	74	0.0	0.0	0.2	0.0	0.0	0.0	0.2	0.2	0.0	
6.6 CSM Storage Initiation	1.4	0.1	1.4	1.4	32	0.0	0.0	1.4	0.0	0.0	0.0	1.4	1.4	1.3	
6.8 CSM Unattended	2,195.9	0.0	2,195.9	2,195.9	4,231	0.0	0.0	2,195.9	0.0	0.0	0.0	2,195.9	2,195.9	2,195.9	
6.17 CSM Active	1.0	0.5	1.0	1.0	1	0.0	0.0	1.0	0.0	0.0	0.0	0.5	0.5	2.5	
6.18 Transfer	0.5	0.5	0.5	0.5	56	0.0	0.4	0.5	0.0	0.3	0.0	0.0	0.0	0.0	
6.19 Departure Preparation	4.0	4.0	4.0	4.0	25	0.0	4.0	4.0	4.0	2.5	0.0	0.0	0.0	0.0	
6.21 Transearth Injection	0.1	0.1	0.1	0.1	1	0.0	0.1	0.1	0.1	0.1	0.0	0.0	0.0	0.0	
7.0 Transearth Coast	88.2	88.2	88.2	88.2	110	88.2	88.2	88.2	88.2	88.2	88.2	0.0	0.0	0.0	
8.0 Entry	0.3	0.3	0.3	0.3	0	0.3	0.3	0.3	0.3	0.3	0.3	0.0	0.0	0.0	
9.0 Recovery	20.0	0.0	0.0	0.0	0	0.0	0.0	0.0	0.0	0.0	0.0	0.0	0.0	0.0	
Total		168.0	2,368.7	2,368.7	4,493 CY	162.6	179.6	2,378.7	176.2	174.3	170.6	2,199.0	2,199.0	2,200.3	

Table 2-5. CSM Function Duty Cycle Estimates, Operating Time in Hours (Sheet 2 of 3)

	Storage Monitor					Propulsion				Support System			
CSM Functional Phases	Environment Status	Spacecraft Kinematics	Fuel Reserves	Alarm Sensors	Fuel Cell Status	Fuel Management	Engines - Burn Time	Engines - Cycles	Fuel Storage	Diagnostic Systems	EVA Equipment	M&R Data	Controls and Displays
1.0 Prelaunch	0.5	0.5	0.5	0.5	8.0	8.0	0	0	8.0	0.0	0.0	5.0	13.0
2.0 Ascent	0.0	0.0	0.0	0.0	0.2	0.2	0	0	0.2	0.0	0.0	0.0	0.2
3.0 Earth Orbit	0.0	0.0	0.0	0.0	0.0	1.5	0	0	1.5	0.0	0.0	0.0	1.5
5.0 Translunar	0.0	0.0	0.0	0.0	0.0	61.7	4	3 CY	61.7	0.0	0.0	0.0	61.7
6.0 Lunar Area													
6.1 Adjust Orbit	0.0	0.0	0.0	0.0	0.0	2.2	150 Sec	1 CY	2.2	1.0	0.5	1.0	2.2
6.2 Transfer	1.0	0.5	0.5	0.5	0.5	0.0	0	0	3.5	0.0	0.0	0.0	3.0
6.4 Separate	0.2	0.2	0.2	0.2	0.0	0.0	0	0	0.2	0.0	0.0	0.0	0.0
6.6 CSM Storage Initiation	1.4	1.4	1.4	1.4	1.4	0.0	0	0	1.4	0.0	0.0	0.0	0.0
6.8 CSM Unattended	2,195.9	2,195.9	2,195.9	2,195.9	2,195.9	0.0	0	0	22.0	0.0	0.0	0.0	0.0
6.17 CSM Active	1.0	1.0	1.0	1.0	1.0	0.0	0	0	1.0	0.0	0.0	0.0	0.0
6.18 Transfer	0.1	0.1	0.1	0.1	0.1	0.0	0	0	0.5	0.0	0.0	0.0	0.0
6.19 Departure Preparation	0.0	0.0	0.0	0.0	0.0	2.0	0	0	4.0	3.5	2.5	3.5	4.0
6.21 Transearth Injection	0.0	0.0	0.0	0.0	0.0	0.1	346	1 CY	0.1	0.0	0.0	0.0	0.1
7.0 Transearth Coast	0.0	0.0	0.0	0.0	0.0	88.2	100	3 CY	88.2	0.0	0.0	0.0	88.2
8.0 Entry	0.0	0.0	0.0	0.0	0.0	0.3	0		0.3	0.0	0.0	0.0	0.3
9.0 Recovery	0.0	0.0	0.0	0.0	0.0	0.0	0		0.0	0.0	0.0	0.0	0.0
Total	2,200.1	2,199.6	2,199.6	2,199.6	2,199,4	164.2	600 Sec	8 CY	194.8	5.0	3.0	5.0	174.3

Table 2-5. CSM Function Duty Cycle Estimates, Operating Time in Hours (Sheet 3 of 3)

	Guidance and Navigation			Communications and Data									Electrical Power					
CSM Functional Phases	Attitude Reference (IMU)	Computation (AGC)	Timing (CTU)	Data Programmer (ASDAP)	Up-Data Link	Down-Data - Earth, Fast	Down-Data - Earth, Slow	Down-Data - Lunar	Data Storage	Audio	CSM/LM Audio	Command Link (RCC)	Batteries (Cycles)	Batteries (Time)	Fuel Cells	Charger	Inverter	Distribution
1.0 Prelaunch	0.0	0.0	0.0	0.5	100.0		0.5	0.5	1.0	8.0	0.5	0.0	0.0	13.0	13.0	13.0	13.0	13.0
2.0 Ascent	0.0	0.0	0.2	0.0	0.2	0.2	0.0	0.0	0.2	0.2	0.0	0.0	0.0	0.2	0.2	0.2	0.2	0.2
3.0 Earth Orbit	0.0	0.0	1.5	0.0	1.5	1.5	0.0	0.0	1.5	1.5	0.0	0.0	0.0	1.5	1.5	1.5	1.5	1.5
5.0 Translunar	0.0	0.0	61.7	0.0	61.7	61.7	0.0	0.0	61.7	61.7	0.0	0.0	0.0	61.7	61.7	61.7	61.7	61.7
6.0 Lunar Area																		
6.1 Adjust Orbit	2.2	2.2	2.2	0.0	0.0	2.2	0.0	0.0	2.2	2.2	0.0	0.0	1.0	2.2	2.2	2.2	2.2	2.2
6.2 Transfer	3.5	0.0	3.5	0.5	0.0	3.0	0.5	0.5	3.0	3.0	0.2	0.2	0.0	0.5	3.5	3.5	3.5	3.5
6.4 Separate	0.0	0.0	0.2	0.2	0.0	0.0	0.0	0.0	0.0	0.0	0.0	0.2	0.0	0.2	0.2	0.2	0.2	0.2
6.6 CSM Storage Initiation	0.0	0.0	0.1	1.4	0.0	0.0	0.0	0.1	0.0	0.0	0.0	1.4	0.0	1.4	1.4	1.4	1.4	1.4
6.8 CSM Unattended	0.0	0.0	0.0	2,195.9	90.0	0.0	90.0	90.0	0.0	0.0	0.0	2,195.9	13.0	2,195.9	2,195.9	219.6	2,195.9	2,195.9
6.17 CSM Active	1.0	0.0	1.0	1.0	0.0	0.0	0.5	1.0	0.0	0.0	0.0	1.0	1.0	1.0	1.0	1.0	1.0	1.0
6.18 Transfer	0.5	0.0	0.5	0.0	0.0	0.0	0.2	0.5	0.2	0.5	0.0	0.0	0.0	0.5	0.5	0.5	0.5	0.5
6.19 Departure Preparation	4.0	0.5	4.0	0.0	0.0	4.0	0.0	0.0	4.0	4.0	4.0	0.0	0.0	4.0	4.0	4.0	4.0	4.0
6.21 Transearth Injection	0.1	0.1	0.1	0.0	0.0	0.1	0.0	0.0	0.1	0.0	0.0	0.0	0.0	0.1	0.1	0.1	0.1	0.1
7.0 Transearth Coast	19.4	19.4	88.2	0.0	88.2	8.2	0.0	0.0	88.2	88.2	0.0	0.0	0.0	88.2	88.2	88.2	88.2	88.2
8.0 Entry	0.0	0.0	0.3	0.0	0.0	0.0	0.0	0.0	0.3	0.3	0.0	0.0	0.0	0.3	0.3	0.3	0.3	0.3
9.0 Recovery	0.0	0.0	0.0	0.0	0.0	0.0	0.0	0.0	0.0	0.0	0.0	0.0	0.0	0.0	0.0	0.0	0.0	0.0
Total	30.7	22.2	163.5	2,199.5	341.6	79.2	91.5	92.3	162.7	169.3	5.2	2,199.2	15 CY	2,370.7	2,373.7	397.4	2,373.7	2,373.7

(9) Maintenance and repair support items are required to facilitate implementation of the availability concept as applied to the manned portions of the mission. The specific requirements include spares, tools, diagnostic equipment, and a data system.

(10) Special facilities/EVA support are also required to facilitate crew safety under the proposed operational concept. These support functions, include such items as spacesuit, maneuvering units, and spacecraft design features which facilitate EVA activities and external maintenance.

(11) Up-data reception is required to perform the functions normally expected of the Apollo up-data link and is of particular importance to this mission because the central timer and the Apollo guidance computer will be shut down during the quiescent state. The data required include timing, computer memory update, and a channel for the command functions that drive the remote controller or activate the down-data transmissions.

(12) Increased environmental protection against meteroids may be required to meet the Apollo objectives for the 90-day mission. In addition, the risk of higher radiation levels must be considered. Other environments, except the solar heat previously referenced, will not materially affect the mission.

2.3.2 The LM Functional Requirements (Table 2-3)

(1) Remote control of the CSM from the LM, as well as from the earth and lunar surface, may be a requirement to maximize mission success/crew safety. The functions to be controlled are those referenced in Paragraph 2.3.1 (6).

(2) Crew transfer aids are required to permit EVA transfer of the crew to the CSM in the event they are unable to hard dock. See Paragraph 2.3.1 (10).

(3) CSM status monitoring of some form may be required to provide rudimentary information as to the CSM condition after separation and prior to rendezvous. In addition, it must respond to any alarm signal transmitted by the CSM while the LM is in use. Again, the earth link may satisfy this requirement.

(4) A command link is required to transmit the commands generated by the CSM remote controller, Function (1).

(5) Provisions for a third crewman are required in the LM to bring the third man to the lunar surface. This approach has been adequately described in Reference (2). These provisions include both space and support functions.

(6) Electrical power is required for the quiescent period as well as the periods of usage. The expected power requirements will vary depending on the use of parasitic heat. The power level required will vary considerably depending on the parasitic heat available from the power source. Much of the power is required to produce heat energy.

(7) Internal temperature control will be required for the storage mode, which will limit the wall and equipment temperature to between +40 and +100 F, the LM in-flight specifications. Under these conditions, however, the water tanks must be kept from freezing, and perhaps some control of IMU internal temperatures must be maintained.

(8) Internal pressure control of some form may be desirable during the quiescent mode. As indicated for the CSM in Paragraph 2.3.1 (4), it should be about 0.5 psia. This requirement is not known to be firm.

(9) External temperature control may be required to prevent the RCS engines from freezing (or to thaw them out prior to usage) and to prevent the fuel tanks from freezing. The LM vehicle surface temperatures are expected to vary between +120 and -260 F according to Surveyor VI data (Reference 2-3).

(10) Maintenance and repair support will be required to assure successful application of the availability concept to the stored LM. Maintenance can be performed any time the LM is on the lunar surface or in transit; however, only the systems involved in quiescent control and data handling need to be maintained until just prior to departure. Interchangeability with the shelter systems is a desirable feature. These support items are specifically identified in a subsequent section. They include tools, spares, and diagnostic data. M&R actions will be limited to the box level unless the work can be taken to the lunar shelter.

(11) A CSM tracking/locator of some form is required to aid the LM crew in establishing the rendezvous data prior to launch from the lunar surface, and updating it during transit without aid from earth (MSFN). Use of earth tracking data should be the normal mode of operation and may be accomplished through use of the lunar base systems.

(12) Up-Data are required from earth and prior to launch to restore the LM guidance computer memory and reestablish the timing base after shutdown for the quiescent mode.

2.3.3 Lunar Shelter Functional Requirements (Table 2-4)

NOTE: These systems are not a part of this study.

The lunar shelter is to be sent ahead of the ELOR mission to provide the living and work quarters for the extended stay-time. In addition, it will provide some support functions necessary to keep the exploration party aware of both the LM and CSM status. These required functions are as follows:

(1) The CSM status board is to provide a visual display of the CSM condition as it orbits the moon. It would probably be updated at least once a day unless a critical situation was identified and/or when the abort criteria were compromised. Data may come direct from the CSM or via earth. See Paragraph 2.3.1 for data to be monitored.

(2) An alarm system is required to notify all lunar party members, regardless of where they are, of an impending emergency and/or the subsequent abort plans in time to respond safely. The system must respond to situations created either by LM problems or CSM problems.

(3) Remote control of the CSM is required to maintain safe or optimum storage conditions in the event of some failures. The remote-control link should provide the following actions:

1. Activate normal CSM stability control mode.

2. Command a status review.

3. Startup the standby fuel cells.

4. Switch loads to any of the operating cells.

5. Shut down a malfunctioning cell if used.

6. Switch to any redundant function of a system where failure can compromise the ability of the crew to return safely.

(4) A Command link is required to provide communications between the lunar surface and the orbiting CSM. Digital data only will be transmitted, consisting of the commands listed above.

(5) An LM status board is required to monitor the LM in the quiescent mode. It is considered better to monitor the functions from the shelter rather than disturb the LM systems in the dormant state. These data may be transmitted via hard lines or on the VHF link, depending on whichever proves to be the more reliable mode. Emergency situations must be relayed as an alarm. The data to be monitored are as indicated under Paragraph 2.3.2.

2.4 SYSTEM FUNCTION DUTY CYCLE ESTIMATES

The command and service modules are expected to function during the ELOR mission in much the same way and for the same periods as the Apollo LOR mission, except during the lunar area phases. To compensate for this and to determine the actual ELOR mission subsystem duty cycles, the Apollo design reference mission (DRM-2A), Reference 2-1, was modified to reflect the changes expected for ELOR. The resulting estimates are reflected in Table 2-5 for the CSM system.

Modified duty cycle estimates for the LM used in the ELOR mission are presented in Table 2-6. These estimates are actually 25 to 30 percent less than those of the normal Apollo-LOR, except for the dormant control functions, because the systems are shut down immediately after landing, and the lunar shelter provides the required functions while the crew is on the lunar surface.

2.5 QUIESCENT MODE OPERATIONS

The mode of operations employed during the CSM and LM dormant phase is of paramount importance to this study's objectives, since the mission duration (overall) is significantly longer (by a ratio of more than 12 to 1) than that for which the Apollo CSM and LM were designed. As a result, specific action is required to minimize the hazard of failure during this period. To resolve this problem, it is necessary to understand the mechanics of failure and take advantage of any potential control actions to reduce the failure hazard before other alternatives such as maintenance are considered. As a case in point, consider the data of Figure 2-13.

It is well known from the basic reliability equation $R = e^{-\lambda t}$ that a failure hazard (λt) is time dependent. If the clock can be stopped, theoretically the reliability would remain as it was when it was stopped. Therefore, it would seem that any time the systems do not operate they do not accumulate time or become a hazard to crew safe return. To a degree this is true; however, tests have shown that even in the quiescent state, some components may develop failures which are manifested when the system is turned on. In defining this situation, a recent study performed by Martin-Marietta concluded that, on the average, the failure hazard was reduced by a ratio of 99 to 1 while the system was stored in a normal earth environment (Reference 2-2). Under "controlled bench" conditions it would be even less.

Given the foregoing and applying it to a comparison between the Apollo LOR and ELOR, it was found that the average failure hazard during ELOR lunar operations exhibited a factor of 55 less than for the Apollo mission if all equipment was shut down and the aforementioned dormant conditions were maintained. Further, it has been shown that systems that are cycled on and off can be subject to higher failure hazards than those operated only when

Table 2-6. LM System Function Duty Cycle Estimates, Operating Time in Hours
(Sheet 1 of 3)

		Navigation and Guidance					Stability Control			Reaction Control		
LM Functions/Phases	Phase Duration	Reference Data (IMU and CDU)	Computation, Guidance	Rendezvous Radar	Landing Radar	IMU Heaters	Control Electronics	Abort Guidance	Propellant Supply - Storage	Propellant Supply - Feed	Propellant Supply - Pressurant	Thrust Chamber Assembly
1.0 Prelaunch	100.0	0.2	0.2	0.2	8.3	0.2	0.1	8.3	0.0	0.0	0.0	0
2.0 Ascent	0.2	0.0	0.0	0.0	0.0	0.0	0.0	0.0	0.0	0.0	0.0	0
3.0 Earth orbit	1.5	0.0	0.0	0.0	0.0	0.0	0.0	0.0	0.0	0.0	0.0	0
5.0 Translunar	61.7	0.0	0.0	0.0	0.0	61.7	0.0	0.0	61.7	0.0	0.0	0
6.0 Lunar area	2,208.8											
6.1 Adjust orbit	2.2	0.0	0.0	0.0	0.0	2.2	0.0	0.0	2.2	2.2	0.0	0 CY
6.3 Prepare LM	3.5	1.5	1.5	0.1	0.2	3.5	1.5	0.2	3.5	3.5	0.3	1
6.4 Separate	0.2	0.2	0.0	0.2	0.0	0.2	0.2	0.2	0.2	0.2	0.2	20 CY
6.5 Stationkeeping	1.4	1.4	1.4	1.4	0.1	1.4	1.4	0.0	1.4	1.4	1.4	40 CY
6.7 Descent	1.2	1.2	1.2	0.0	1.2	1.2	1.2	1.2	1.2	1.2	1.2	10 CY
6.9 Landing	0.1	0.1	0.1	0.0	0.1	0.1	0.1	0.1	0.1	0.1	0.1	0
6.10A Storage preparation	1.0	0.2	0.2	0.1	0.0	1.0	0.2	0.1	1.0	0.2	0.2	0
6.10B Storage operation	2,187.5	0.0	0.0	0.0	0.0	2,187.5	0.0	0.0	2,187.5	0.0	0.0	0
6.13 Depart. preparation	4.0	1.0	1.0	0.1	0.0	4.0	1.0	0.0	4.0	0.5	0.5	0
6.14 Launch operation	1.0	1.0	1.0	0.3	0.0	1.0	1.0	0.5	1.0	1.0	1.0	1
6.13 Ascent	1.1	1.1	1.1	1.1	0.0	1.1	1.1	1.1	1.1	1.1	1.1	30
6.16 Rendezvous	1.0	0.5	0.5	0.5	0.0	0.5	0.5	0.5	0.5	0.5	0.5	100
6.20 Deactivate	4.6	0.0	0.0	0.0	0.0	0.0	0.1	0.0	0.0	0.0	0.0	0
7.0 Transearth	88.2	0.0	0.0	0.0	0.0	0.0	0.0	0.0	0.0	0.0	0.0	0
8.0 Entry	0.3	0.0	0.0	0.0	0.0	0.0	0.0	0.0	0.0	0.0	0.0	0
9.0 Recovery	20.0	0.0	0.0	0.0	0.0	0.0	0.0	0.0	0.0	0.0	0.0	0
Total		8.4	8.2	4.0	1.8	2,273.7	8.5	3.8	2,273.7	6.5	6.5	202 CY

Table 2-6. LM System Function Duty Cycle Estimates, Operating Time in Hours
(Sheet 2 of 3)

	Propulsion Systems				Instrumentation				Communications and Data						
LM Functions/Phases	Descent Subsystem	Ascent Storage Function	Ascent Propulsion	Ascent Pressurization	Sensors and Signal Condition	Caution and Warning	PCM and Timing	Data Storage	CSM Command Link	CSM Status Receiver	Down-Data - LEM to Earth	Down-Data - LEM to Shelter	Up-Data Link (Via Lunar Shelter)	Audio Centers	Storage Data Coupler Assembly
1.0 Prelaunch	0	8.3	0	0.0	0.5	0.5	0.5	0.5	0.5	0.5	0.5	0.5	0.5	1.0	0.5
2.0 Ascent	0	0.0	0	0.0	0.0	0.0	0.0	0.0	0.0	0.0	0.0	0.0	0.0	0.0	0.0
3.0 Earth orbit	0	0.0	0	0.0	0.0	0.0	0.0	0.0	0.0	0.0	0.0	0.0	0.0	0.0	0.0
5.0 Translunar	0	61.7	0	0.0	0.0	0.0	0.0	0.0	0.0	0.0	0.0	0.0	0.0	0.0	0.0
6.0 Lunar area															
6.1 Adjust orbit	0	2.2	0	0.0	0.0	0.0	0.0	0.0	0.0	0.0	0.0	0.0	0.0	0.0	0.0
6.3 Prepare LM	0	3.5	0	0.0	0.5	0.5	0.5	0.5	0.1	0.2	0.5	0.1	0.1	2.5	0.1
6.4 Separate	0	0.2	0	0.0	0.2	0.2	0.2	0.2	0.2	0.2	0.2	0.0	0.0	0.2	0.0
6.5 Stationkeeping		1.4	0	0.0	1.4	1.4	1.4	1.4	1.2	1.4	1.4	0.0	1.4	0.0	0.0
6.7 Descent	1,300 Sec	1.2	0	0.0	1.2	1.2	1.2	1.2	0.0	1.2	1.4	0.0	0.0	1.4	0.0
6.9 Landing	0	0.1	0	0.0	0.1	0.1	0.1	0.1	0.0	0.1	0.1	0.0	0.0	0.1	0.0
6.10A Storage preparation	0	1.0	0	0.0	0.5	0.5	0.5	0.0	0.0	1.0	1.0	0.5	0.1	0.3	0.5
6.10B Storage operation	0	2,187.5	0	0.0	0.0	0.0	0.0	0.0	0.0	0.0	0.0	90.0	0.0	0.0	90.0
6.13 Depart. preparation	0	4.0	0	0.2	2.0	2.0	2.0	2.0	0.2	4.0	1.0	2.0	3.0	2.0	3.0
6.14 Launch operation	0	1.0	0	1.0	1.0	1.0	1.0	1.0	0.0	1.0	1.0	0.0	1.0	1.0	0.0
6.13 Ascent	0	1.1	460 Sec	1.1	1.1	1.1	1.1	1.1	0.0	1.1	1.1	0.0	0.5	1.1	0.0
6.16 Rendezvous	0	0.5	50 Sec	0.5	0.5	0.5	0.5	0.5	0.5	0.5	0.5	0.0	0.0	0.5	0.0
6.20 Deactivate	0	0.0	0	0.0	0.0	0.0	0.0	0.0	0.0	0.0	0.0	0.0	0.0	0.0	0.0
7.0 Transearth	0	0.0	0	0.0	0.0	0.0	0.0	0.0	0.0	0.0	0.0	0.0	0.0	0.0	0.0
8.0 Entry	0	0.0	0	0.0	0.0	0.0	0.0	0.0	0.0	0.0	0.0	0.0	0.0	0.0	0.0
9.0 Recovery	0	0.0	0	0.0	0.0	0.0	0.0	0.0	0.0	0.0	0.0	0.0	0.0	0.0	0.0
Total	1,300 Sec	2,272.7	510 Sec	2.8	9.0	9.0	9.0	8.5	2.7	11.2	9.2	93.1	5.2	10.1	94.1

Table 2-6. LM System Function Duty Cycle Estimates, Operating Time in Hours
(Sheet 3 of 3)

	Storage and Monitor and Alarm			Electrical Power					Environmental Control				
LM Functions/Phases	Status Sensors	Alarm	Program Reader	Power Generator	Batteries (Descent)	Power Conversion	Distribution and Control	Batteries (Ascent)	Atmospheric Revitalization	O_2 Supply and Pressure Control	Heat Transport Sec.	Water Management	Waste Management
1.0 Prelaunch	0.5	0.5	0.5	8.3	0.5	8.3	8.3	0.1	0.5	0.5	8.3	0.5	0.0
2.0 Ascent	0.0	0.0	0.0	0.0	0.0	0.0	0.0	0.0	0.0	0.0	0.0	0.0	0.0
3.0 Earth orbit	0.0	0.0	0.0	0.0	0.0	0.0	0.0	0.0	0.0	0.0	0.0	0.0	0.0
5.0 Translunar	0.0	0.0	0.0	61.7	0.0	61.7	61.7	0.0	0.0	0.0	61.7	0.0	0.0
6.0 Lunar area													
6.1 Adjust orbit	2.2	2.2	2.2	2.2	0.0	2.2	2.2	0.0	0.0	0.0	2.2	0.0	0.0
6.3 Prepare LM	0.1	0.1	0.1	3.5	0.0	3.5	3.5	0.0	2.5	2.5	3.5	2.5	1.0
6.4 Separate	0.0	0.0	0.0	0.2	0.2	0.2	0.2	0.0	0.2	0.2	0.2	0.2	0.0
6.5 Stationkeeping	0.0	0.0	0.0	1.4	1.4	1.4	1.4	0.0	1.4	1.4	1.4	1.4	1.4
6.7 Descent	0.0	0.0	0.0	1.2	1.2	1.2	1.2	0.0	1.2	1.2	1.2	1.2	1.2
6.9 Landing	0.0	0.0	0.0	0.1	0.1	0.1	0.1	0.0	0.1	0.1	0.1	0.1	0.1
6.10A Storage preparation	0.5	0.5	0.5	1.0	0.0	1.0	1.0	0.0	0.2	0.2	1.0	0.2	0.2
6.10B Storage operation	2,187.5	2,187.5	2,187.5	2,187.5	0.0	2,187.5	2,187.5	0.0	0.0	0.0	2,187.5	0.0	0.0
6.13 Depart. preparation	3.0	3.0	4.0	0.0	4.0	4.0	4.0	4.0	1.0	1.0	1.0	1.0	0.0
6.14 Launch operation	0.0	0.0	0.0	0.0	1.0	1.0	1.0	1.0	1.0	1.0	1.0	1.0	0.0
6.13 Ascent	0.0	0.0	0.0	0.0	0.0	1.1	1.1	1.1	1.1	1.1	1.1	1.1	1.1
6.16 Rendezvous	0.0	0.0	0.0	0.0	0.0	0.5	0.5	0.5	0.5	0.5	0.5	0.5	0.5
6.20 Deactivate	0.0	0.0	0.0	0.0	0.0	0.5	0.5	0.5	0.5	0.5	0.5	0.5	0.5
7.0 Transearth	0.0	0.0	0.0	0.0	0.0	0.0	0.0	0.0	0.0	0.0	0.0	0.0	0.0
8.0 Entry	0.0	0.0	0.0	0.0	0.0	0.0	0.0	0.0	0.0	0.0	0.0	0.0	0.0
9.0 Recovery	0.0	0.0	0.0	0.0	0.0	0.0	0.0	0.0	0.0	0.0	0.0	0.0	0.0
Total	2,193.8	2,193.8	2,193.8	2,272.1	8.3	2,274.2	2,274.2	7.2	10.2	10.2	2,270.4	10.2	6.0

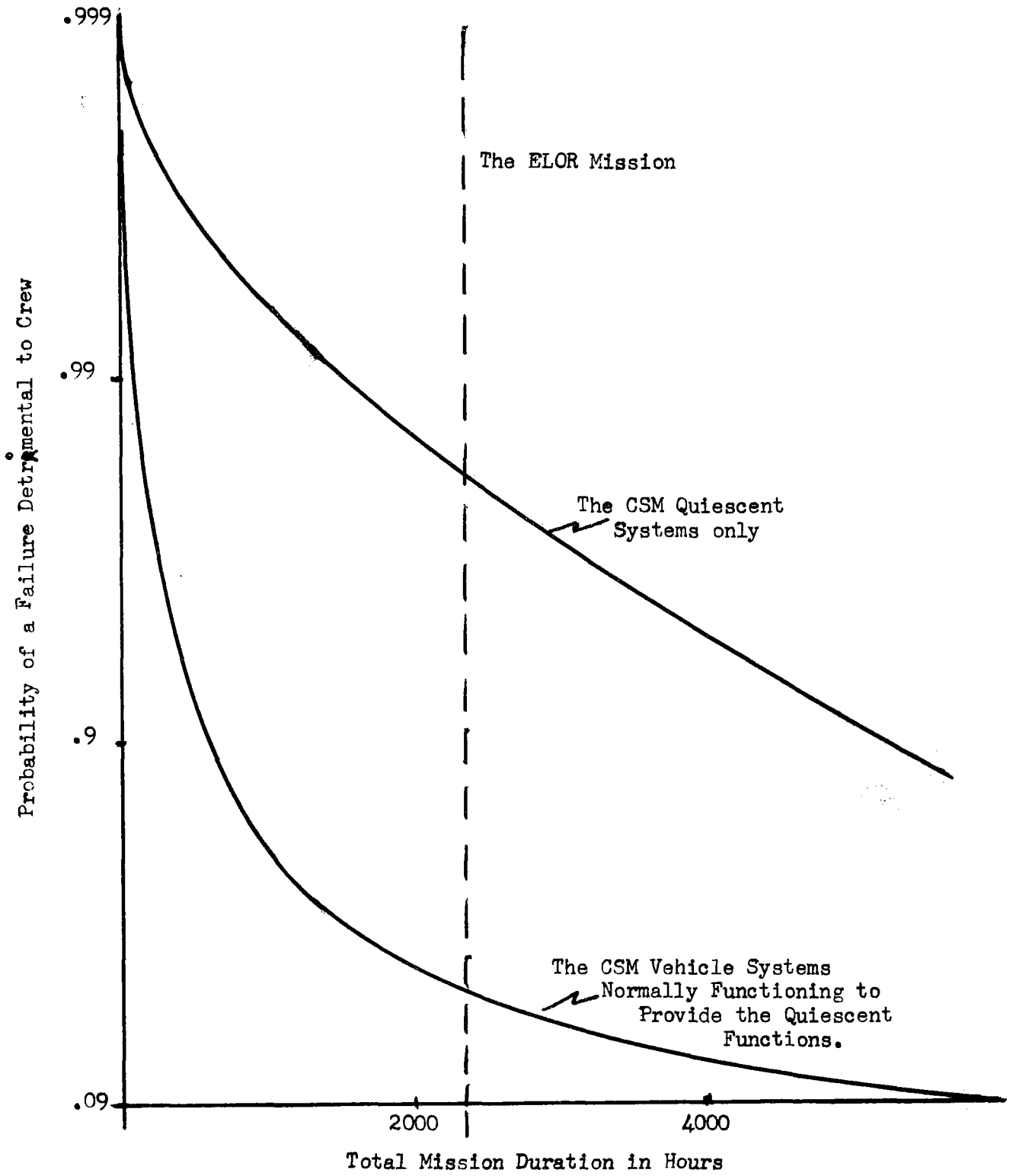

Figure 2-13. Effects of Dormancy Concept on the Probability of Safe Return, No Maintenance or Repair

required. Obviously this effect cannot be attained for either the CSM or the LM because storage conditions must be maintained. It does, however, provide the following basic criteria for the quiescent mode design:

1. Operate the systems no more than is absolutely required.

2. Leave off all systems functions not required.

3. Perform the detailed systems status checks prior to departure, but allow enough time to perform all required maintenance actions.

2.6 MISSION SUCCESS/CREW SAFETY AND ABORT CRITERIA

2.6.1 Definitions

Considerable misunderstanding exists regarding the meaning of mission success (MS), crew safe return (CS), and abort criteria (AC). For this reason, it is necessary to define these terms within the context of the ELOR mission. The term reliability (R) will not be used in this study in connection with mission objectives, since it is normally associated with missions and systems wherein failure of a system cannot be tolerated. With reference to the ELOR mission, it is almost self-evident that failures should be expected and, indeed, planned for because of the duration and the operational time frame (1975). A major objective of this study is the identification of potential failures and determination of the extent of preparation required.

The following definitions are submitted for application to the ELOR mission:

1. Probability of Mission Success (P_{90}). P_{90} is the chance that the mission will be completed as planned and reflected in the timeline profile. That is, the full 90-day stay-time will be completed without compromising the abort criteria. Within this definition failures are permitted, provided that they are repaired and that they permit completion of the mission.

2. Probability of Crew Safe Return (P_s). P_s is the chance that the crew will return safely to earth in spite of any circumstance which may arise during any phase of the mission. These circumstances include mission success, use of any backup modes, and any abort requirements, but not rescue. (Rescue requirements are a separate category.)

3. Safe Abort. The crew is returned to earth in the CM prior to the scheduled time and is recovered safely at a preselected recovery area without exposure to any abnormal environments. This procedure is initiated when the abort criteria have been exceeded and when one more irreparable failure could lead to crew loss.

4. Emergency Abort. An emergency abort is created by the need to return to earth at the earliest possible time. It may or may not be in less time than that required for a safe abort. Under these conditions recovery can be anywhere on earth in the area included between 45 degrees north latitude and 45 degrees south latitude. This form of abort is initiated only when catastrophic failure is imminent, no repairs are possible, and the crew is in immediate danger.

2.6.2 Abort Criteria

The abort criteria for all the ELOR mission phases except the quiescent phase is considered without exception to be the same as those imposed on the Block II configuration of the Apollo DRM-2A. During the quiescent phase; i.e., LM dormant on the lunar surface or the CSM in lunar orbit, however, the basic approach must of necessity change. During this time, only quiescent control and telemetry will be functioning; therefore, failures cannot occur in the other system functions—by definition. Failures will only become apparent after the vehicle has been boarded and the systems have been activated; at this time maintenance and repair actions can be planned to compensate for failures.

Abort criteria for the quiescent phases need only be addressed to the problem of maintaining the required state and/or not degrading abort capability. The results of this approach are reflected in the criteria of Tables 2-7 and 2-8.

2.7 SYSTEM FUNCTION DOWNTIME CONSTRAINTS

2.7.1 Definitions and Causations

Since maintenance in space is a requirement for longer missions, one of the associated problems is identification of the system tolerance to malfunction. To resolve this problem, it is necessary to understand system operation when performance anomalies occur. Individual malfunctions seldom lead to complete system failure; rather, there is the temporary loss of a function. In most of these cases, and for all critical functions, modern spacecraft designs call for some form of independent backup that will permit continued operation. Even with this amount of precaution, some situations

Table 2-7. Abort Criteria, CSM Dormant in Lunar Orbit

System	Abort Criteria
1. Electrical power	1. Loss of one fuel cell 2. Excessive O_2 or H_2 usage/loss (fuel cell concept only)
2. ECLSS	1. No coolant circulation 2. Out-of-tolerance internal temperatures 3. Loss of cabin pressure
3. Communications	1. Loss of command link 2. Loss of all status data
4. Stability control	1. Loss of stability control 2. Loss of orientation/attitude control and/or attitude reference
5. Guidance and navigation	1. Loss of IMU temperature control (maybe)
6. Other	1. Excessive heat-shield temperature stress

Table 2-8. Orbit Criteria, LM Stored on Lunar Surface

System	Abort Criteria
1. Electrical power	1. Loss of electrical power 2. Excessive use or loss of O_2 (or fuel)
2. ECLSS	1. Out-of-tolerance temperatures, internal or external (fuel tanks) 2. Loss of cabin pressure
3. Communication	1. Loss of communications with earth 2. Inability to monitor status
4. Stability control	1. None
5. Guidance and navigation	1. Loss of IMU temperature control (maybe)
6. Others	1. None

may arise that would not permit performance of a given critical function until a repair is made. It is these situations that establish the most critical constraints on mission systems design. These are the maintenance time constraints (MTC's). MTC's stem from the need to perform a mission commitment or to support the needs of the crew.

It is logical to assume that a function is required during some specific part of the mission or for a percentage of the total mission duration. Perhaps it is required randomly throughout the mission. It is also just as logical to assume that the mission can proceed in a degraded mode, if only for a very short period. If this is true, that period can be used for both periodic maintenance and the necessary repair or replacement actions. The MTC, therefore, is defined as —

> A restriction imposed on the total allowable elapsed time a mission system function can be out of service before a situation is created that would result in ultimate loss of the mission spacecraft and/or crew.

It should be recognized that downtime constraints are not always described by a single value defining a line of demarcation between life and death. Crew or function degradation may be gradual so that the crew's ability to meet the situation is degraded gradually to the point of final incapacitation. In addition, not all crew members will react alike. This will become obvious from the data that follow:

Downtime constraints, as they apply to the ELOR mission, have meaning only during the manned portions of the mission, or as they affect the time available to abort from the lunar surface. Since the CSM vehicle has been qualified for the normal Apollo mission, the only phase of the mission where the MTC has much significance is during the lunar area operations where the approach has changed substantially.

2.7.2 Spacecraft-Stability or Attitude-Control Constraints

Constraints are created by the need to meet mission commitments A stable and orientable platform is needed for navigation, guidance, and conduct of experiments. Further, crew personnel are limited in their ability to tolerate random and repetitive motion.

The attitude-control systems can fail in the following modes:

1. Under manned phases

    a. Loss of ability to activate the system or any part thereof results in random drift.

b. Failure of a reaction control engine results in a runaway engine and an accelerating spin in at least one plane.

c. Failure of the propulsion engine nozzle (burn-through) results in vector misalignment.

2. Under stored phases, loss of ability to activate the spin system results in loss of ability to change the spacecraft state; i.e., loss of ability to go from the quiescent state slow roll to the stabilized mode or vice versa.

Since the spacecraft is assumed to be operated in two basic modes with respect to control-system problems, the associated control-system emergencies will be quite different.

Under manned phases, the spacecraft must maintain a given attitude through use of a stable platform. The platform is used as a reference and as a reaction control system for repositioning or stopping motion. The system must work constantly throughout the mission to prevent random drift. The tighter the stability dead band, the more often the reaction control system will work. Loss of the system function leaves the spacecraft with an unchanged course vector, but uncontrolled in attitude. It can remain in this condition without serious effects for a considerable portion of a mission; eventually, however, communications, the heat shield, and the reentry or heat-rejection capabilities may be affected. It is probable that the spacecraft will eventually "weather-vane" into the solar winds and remain semistable.

If one of the reaction control jets fails open, the roll rate could build up. The rate will vary according to the axis involved, the axis of symmetry being the worst case. This situation has been shown to be very unlikely for the Apollo CSM or LM.

Under the storage phase, complete loss of the roll control function will result in a slow buildup of the wobble around the roll axis and eventually a shifting of the actual roll axis to one through the centroid where it will tend to stabilize. This should not cause any immediate harm to the spacecraft, but could overstress some equipment. The time available before the wobble becomes excessive is a direct function of the established roll rate. According to the LMSC data (Reference 1-2), it will take 48 hours for the CSM to achieve a 20-degree half-angle wobble at the recommended 0.5 rpm roll rate. Furthermore, the time factor increases rapidly as the initial roll rate is decreased. It would, therefore, seem desirable to establish the CSM roll at as low a rate as is compatible with other criteria. Since the fuel consumption goes down with roll rate, the only limit is that

established by the need for spin stability and barbecuing the vehicle. Further study is required in this area.

2.7.3 Spacecraft Velocity Control, A Profile Constraint

Midcourse corrections are normally required at some time after translunar injection and prior to arrival. Loss of subsystem functions may preclude midcourse correction at a specific point in time; however, this requirement may not be very critical if the subsystem can be returned to operational status. The data resulting from several studies indicate that midcourse corrections can be deferred for many hours. The fuel penalties are expected to be less than 150 feet per second for delays up to 24 hours for early corrections. Inability to apply a ΔV on the outbound leg would result in an aborted mission and a free return.

Earth-approach velocity corrections are those made as the spacecraft approaches the earth's sphere of influence, before its position is established relevant to the reentry corridor. This is an activity that is also critical in that it must be performed; however, there are about 15 hours during which the task can be performed without appreciable penalty. Failure to make the correction could easily result in passing earth or overheating on reentry.

The earth-entry phase requires the uninterrupted operation of all associated system functions; thus, a very narrow corridor must be acquired and maintained by constant vernier control. Any downtime on the part of an associated function could easily result in loss of the mission and crew.

2.7.4 Atmospheric-Pressure Constraints

Atmospheric pressure is required to make the spacecraft habitable to man. Pressure below about 2.0 psia will eventually result in death because body fluids vaporize at pressures somewhere below 1.5 psia. The minimum safe boundary, therefore, is about 2.8 psia (or about 180 mm of Hg) O_2 pressure; however, at this pressure, man must be provided with pure oxygen for breathing. Limited exposure to vacuum may be possible, according to U.S. Air Force tests.

Failures in, or loss of, the atmospheric control system are described under the oxygen subfunction. An additional failure mode is the accidental release of cabin pressure, which could be caused by a large meteoroid impingement or by the blowout of an access hatch or relief system.

Under these conditions, the time to catastrophe cannot be rigidly set at any specific value, since it is directly related to the hole size. The situation resulting from the most probable cause is reflected in the curve of Figure 2-14, where the time history of the internal pressure of the CSM

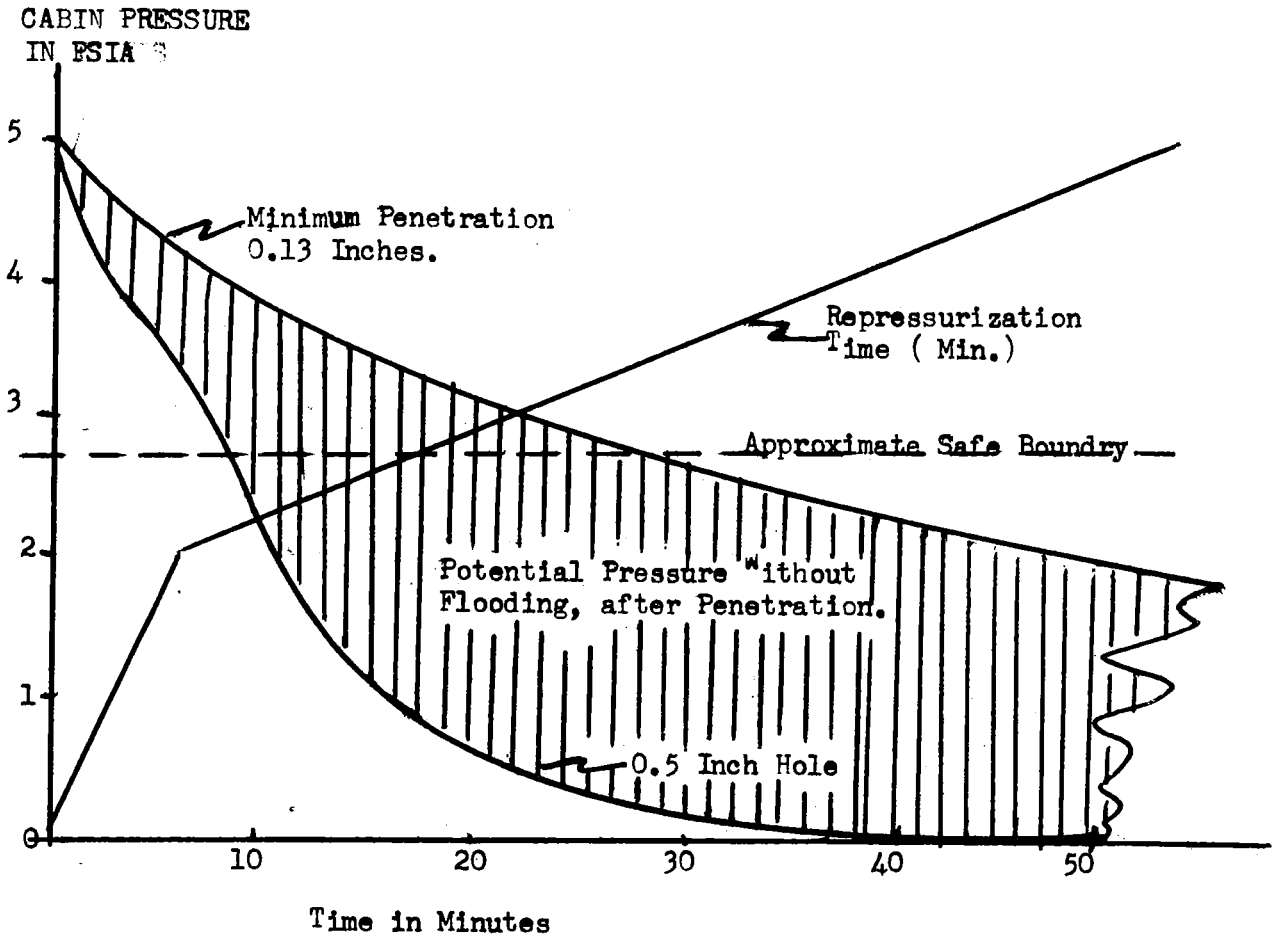

Figure 2-14. Cabin Depressurization/Pressurization Rates, Apollo CSM

is presented as it would result from up to a one-half-inch meteoroid puncture. Under these conditions, there would be about ten minutes before the crew would encounter any deleterious effects. This hole size has a very low probability of occurrence, less than one change in a million with the proposed protection. Smaller size holes have a more significant probability of occurrence; however, the decompression rates are much slower and because of the CM wall construction, will not penetrate below a 0.127-inch particle size regardless of the velocity. Using the NASA/Apollo penetration equation (Reference 2.7), this size has a probability of about 0.9993. The decompression rate for this particle leaves more than 25 minutes before the unsafe pressure level.

2.7.5 Oxygen-System Constraints

The oxygen-system is designed to provide for the metabolic needs of the astronauts. In addition, the system provides a portion of the atmospheric pressure. The total pressure is normally expected to be 5 psia.

Loss of the oxygen-system functions can prevent the system from feeding oxygen to the cabin and/or crew. Loss of oxygen balance or regulation can cause the oxygen pressure to either increase or decrease. Man is very flexible in his tolerance to wide variations in oxygen partial pressure. See Reference 2.1. If the O_2 pressure builds up within the cabin, crew members can survive as long as the crew module structure can.

Loss of the oxygen feed system where the oxygen is not replenished would seem more hazardous If the cabin air consisted of 100-percent oxygen at 5 psia at the time the loss occurred and if the cabin volume were 250 cubic feet, the O_2 partial pressure would slowly drop off as a function of crew metabolic rates. For this study, an estimate was made based on the following assumptions.

1. The leakage ratio is about 1.0 pound per day

   at 5.0 psia or $\frac{P(\text{actual}) \times 0.2}{5 \text{ psig}}$.

2. Metabolic consumption is about 0.74 cubic feet per hour at 5.0 psia for each crew member, or 0.33 lb/hr.

3. There are three crew members working at a normal rate and under normal temperature.

4. Hypoxia sets in at an oxygen partial pressure below about 2.8 psia, or after a 20-percent reduction in the available oxygen.

These data indicate that the oxygen feed system could be inoperative and down for repair for about 2.0 hours for the CSM. This could be reduced by such factors as higher leak rates, increased work activity, and high temperatures. However, it could be increased if the carbon-dioxide removal system continued to operate and/or the emergency supplies or backpacks were used.

2.7.6 Carbon-Dioxide-System Constraints

The carbon-dioxide reduction system removes carbon dioxide from the cabin atmosphere and keeps it below a partial pressure of 4 millimeters of mercury or 0.11 percent by volume. The normal atmosphere contains only about 0.03 percent. Man's average daily output is between 1.76 pounds (or 0.61 cubic feet) and 2.25 pounds per hour, due to normal metabolic function. Under stress and high activity, this value will increase considerably.

Extensive tests and operational situations have provided data which relate man's performance under various conditions and carbon-dioxide concentrations. There seems to be no sharp line between the safe zone and a fatal dose. Rather, performance is gradually degraded until the crewman becomes unconscious.

The problems associated with loss of the carbon-dioxide reduction system functions and the subsequent buildup of carbon dioxide are related in Figure 2-15. In this figure, the buildup rate and the critical points are estimated for the minimum buildup rate (1.75 pounds per hour), an estimated cabin leak rate of 1.0 pounds per day, and an ambient temperature of 75 F. In addition, the cabin initial atmospheric content is about 5 psia of oxygen, with carbon dioxide at between 3.5 and 4.0 millimeters of mercury.

The data indicate that the complete CM carbon-dioxide removal function can be out of service for up to 8.0 hours with little perceptible degradation in performance, or 6.0 hours in the smaller LM cabin. After this, the crew members will probably develop headaches and gradually become less and less efficient. After about 10 hours, they may become unconscious or incapable of performing useful work. It can be said, therefore, that a reasonable downtime constraint for the CM carbon-dioxide removal function need not be any less than the 6 hours and could possibly be 8 hours, depending on the final free volume of the CM and its associated leak rate.

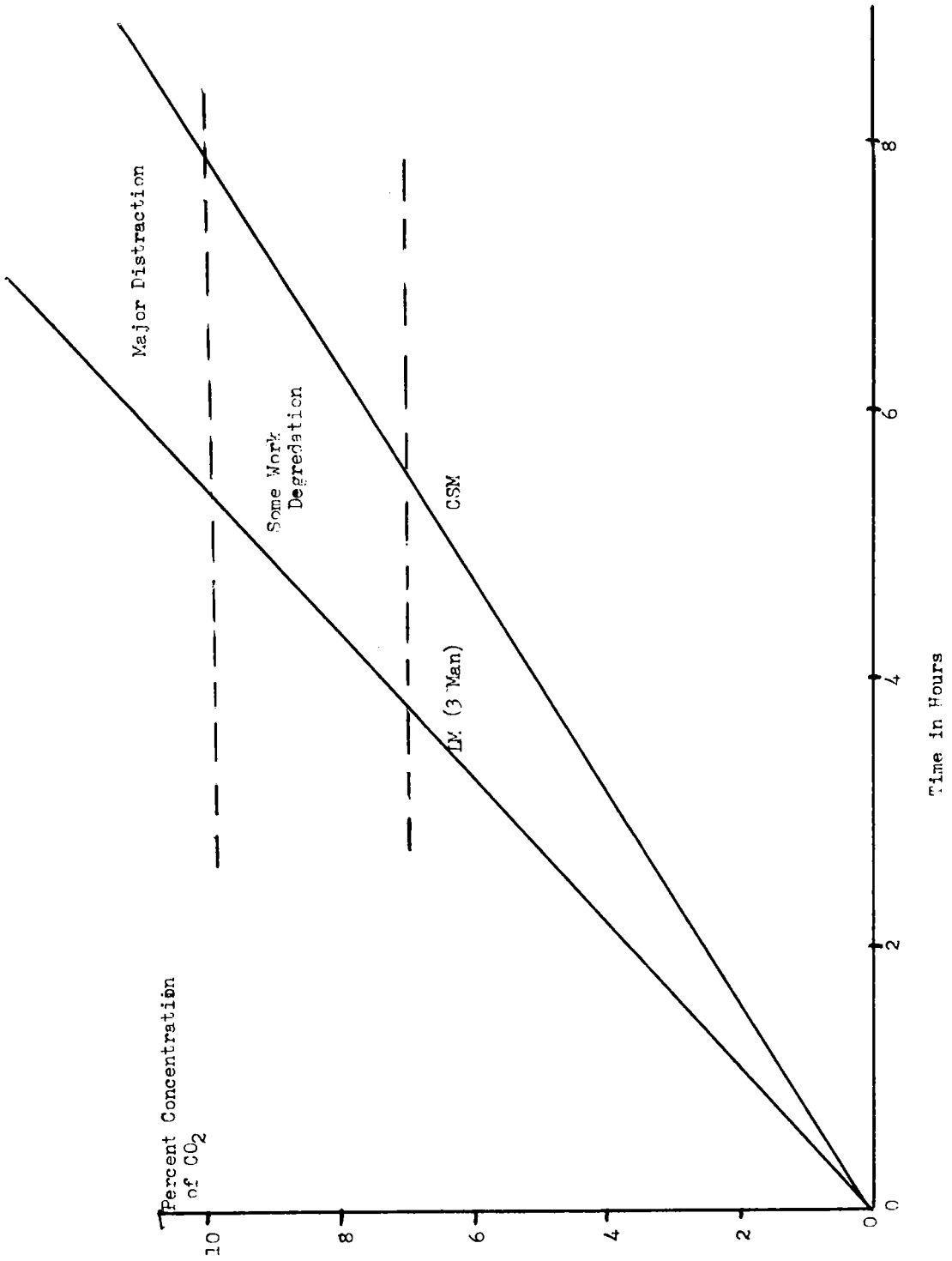

Figure 2-15. Carbon Dioxide Concentration as a Function of Removal Function Downtime

2.7.8 Trace-Contaminant-Control Constraints

Trace contaminants (gases, vapors, aerosols, and particulates) stem from two major sources: the equipment within the spacecraft and the human body. The body is considered the greatest source of these contaminants via the metabolic process. Under actual tests, approximately 100 contaminants have been isolated within the spacecraft cabin, but neither the buildup rate nor the toxicity of the individual contributants has been identified.

If the trace-contaminant removal function fails and is down for any length of time, the contaminants will probably reach a point of equilibrium, probably above the toxic level. However, the buildup rate is known to be low—so low that, with caution in the material selection, it will take days for the levels to reach a toxic state. It is most certainly expected to be less than that associated with carbon-dioxide removal, which can, therefore, provide an estimate of the lower boundary (worst case) approximately 10 hours.

2.7.9 Temperature-Control Constraints

The equipment temperature-control function is required to provide coolant through equipment heat-sinks in the form of coldplates. It also removes the excess heat produced by the electrical power source. Of the two functions, the power-source cooling is the more critical and will probably form the limiting case. Each loop will be treated as a separate constrai constraint.

The fuel cells or the RTG's, which are used to generate the electrical power, are not 100-percent efficient; therefore, some of the fuel is converted into parasitic heat energy. For example, the amount generated depends on the operating level of the cells and the cell design. For the ELOR mission, this heat is to be used to control the internal temperature of the CM and LM during the quiescent phase. Any surplus is radiated into space. Loss of coolant circulation may cause the cabin to cool down to the point where the water and, later, the water-glycol could freeze. A more immediate problem would result from overheating of the power source and the resulting necessity for manual shutdown and loss of electrical power.

During the manned or unmanned mission phases, the permissible downtime (MTC) for electrical power source cooling has no absolute value, it varies over a wide range with loading. Under worst case, the fuel cells temperature rises at the rate of 4 F per minute. However, there is adequate time for the crew to take the necessary action or for the status monitor to transmit the alarm to MSFN and they, in turn, to command a shutdown or a switchover action. The RTG would stabilize at a higher than normal temperature, using the spacecraft as a heatsink and radiator.

The CM cabin temperature (wall and equipment) is held at 70 ±5 F. During the unmanned phases, it can wander between the wide limits of 100 F and 40 F as measured at the interior walls. As a result, only gross control is required during the quiescent phase.

Each crewman adds about 11,200 Btu per day to the crew compartment in addition to the 22,900 Btu contributed by the operating equipment. Since a large surplus of heat is generated, thermal balance is maintained by radiating most of the heat into space.

During the quiescent phase, the only source of internal heat is the parasitic heat output from the electrical power source and its users. This input amounts to an average of about 3000 Btu per hour for one fuel cell or 4940 Btu per hour for one SNAP-27. This heat must be distributed within the CSM to satisfy the wall temperature criteria. The solar radiation is expected to keep the radiators and RCS engines from freezing during barbecue; however, tests are required to verify this capability (Reference 2-5).

Heat lost through the Block II CM wall amounts to about 300 Btu per hour at normal operating temperature (70 F). However, since the cabin may be permitted to operate at lower temperatures (as low as 40 F), the loss is expected to be much less per unit time, and perhaps none. A change in external coating (paint color) can change this loss radically.

Given that the available heat energy can be somewhat evenly distributed throughout the spacecraft and that the foregoing estimates are reasonably accurate, two facts are evident.

1. The surplus heat, between 3000 and 5000 Btu per hour, must be rejected or distributed to other parts of the spacecraft to maintain them within the required limits.

2. With fuel cells in the SM as the sole electrical power source, some of the surplus heat must be transferred to the CM, since most heat-generating elements in the CM are not operating during the quiescent period. Conversely, with 2 RTG's in the CM, some heat will need to be transferred to the SM.

The available downtime is limited by the time required for the CM temperature to drop below the freezing level for the water storage and/or the water-glycol at the lower extreme; and the time required to exceed the 100°F maximum at the upper extreme. The data indicate that there should be more than 24 hours to take a required compensating action. More study is required because of the complex nature of the controlling factors.

2.8 ENVIRONMENTAL FACTORS

2.8.1 Considerations

The environmental factors associated with the ELOR mission will probably not change materially from those applied to the Apollo mission except where the time factor changes. The time factor changes the potential effects of these areas:

1. Vacuum
2. Temperature variations
3. Radiation
4. Meteoroids

Factors 1 and 2 are covered under the individual subsystems, but radiation and meteoroids may merit special considerations.

2.8.2 Penetrating Radiation

During a lunar mission a spacecraft will be exposed to penetrating radiation. On the outbound and the inbound portions of the mission, the spacecraft will pass through the earth's radiation belts; these will not change from Apollo II. In space, there is a finite probability that the spacecraft will be exposed to sporadic solar flare radiation. It is estimated that the radiation exposure under a shield of one gram per square centimeter of aluminum from two passages through the earth's radiation belts would be 500 rads. Extrapolation of Apollo data provides an estimate of a probability of 0.007 of exposure to one or more solar flare events which would produce a radiation exposure under a shield of 1 gm/cm^2 of aluminum of 7×10^3 rads during a 99-day lunar mission. (Reference 2-6)

2.8.3 Meteoroids

The Apollo spacecraft was designed to limit the probability of a meteoroid puncture to less than 0.001 for the 14-day mission.* This is actually the system contribution to the probability of safe return (P_s). However, the ELOR mission is up to 99 days in total duration, and obviously this P_s will be much less as it is affected by the time in the meteoroid environment.

As reflected in Reference 2-7, NR/SD conducted a study of the potential affects of the meteoroid environment, and these data were used to estimate the potential effects of meteoroids on the CSM and LM. These effects are

*Based on the NASA meteoroid model as reflected in NASA/MSC Design Standards Bulletin # DS21A dated February 1968.

discussed under their respective headings in Section 4. The results of the analysis indicated that there is a very high probability of a command or service module puncture and a resulting need to provide for its repair and/or shielding.

2.8.4 Component Technical Considerations

The addition of a 90-day storage period to the ELOR spacecraft components makes it necessary to determine how component life will be affected. Based upon the requirement that most components will not be operated during the quiescent period, there is no present concern for diminishing the life of any component or significantly affecting the operating reliability. This is of course based on the premise that maintenance of correct temperatures and pressures will be accomplished. The following are several problem areas that merit consideration:

Vacuum Welding

Vacuum welding, known as cold welding, is the phenomena of fusion between two ultraclean metallic surfaces loaded against each other while in a hard vacuum. It is not a problem since most surfaces are treated for corrosion protection or lubricity, thereby precluding clean surfaces which lead to cold welding.

Outgassing

Outgassing is the evaporation of dissolved gases and solvents and products of decomposition from the surface and interior of materials. The quantities of the outgassed constituents are dependent upon length of exposure and environment. The principal sources are nonmetallic materials such as plastics, elastomers, adhesives, lubricants, potting compounds and fabrics.

Two problem areas are prevalent with outgassing: (1) contamination of the cabin space with constituents having toxic, noxious, or flammable properties and (2) the decay of physical and mechanical properties of the parent material such as the residual bond strength of an adhesive. Tests have been conducted on all Apollo materials to determine their applicability to space hardware fabrication.

Other cabin materials are also tested to indicate their suitability in high-vacuum environments. The selection criteria to date have eliminated those materials capable of producing significant toxic or flammable products or those whose mechanical properties deteriorate significantly due to off-gassing and oxidation of ball bearing lubricants, which has been a minor

problem in some areas. However, new lubricants and data now available indicate that no future problems exist.

Corrosion

All Apollo heat exchangers and similar components are designed for a 4000 hour service life. During the 90-day mission period (2,160 hours), the quiescent mode is less corrosive and has fewer vibrations and pressure fluctuations than the above design requirement, thus providing a design safety factor for possible corrosion problems.

Leakage

Where future extended tests show any significant leakage of fluids where ample reserve is not available in the system, it should be possible to carry additional fluids and top off the ascent stage systems prior to return to the CSM. GSE connections are available for adding water to the water tanks or nitrogen to the pressurized side of the water tank bladder. Water/glycol coolant can also be added to the cooling loop and accumulators. The two LOX ascent stage tanks each have shutoff valves which should not be opened until the ascent mission phase. There is also significant oxygen pressure on the downstream side of these two shutoff valves due to a connection to the descent stage LOX tank. By 1975 the Apollo missions should provide sufficient leakage data to allow proper precautionary measures as required for a long mission such as ELOR.

3.0 ELOR MISSION SYSTEM

3.1 DESIGN APPROACH

As recommended in the LMSC study, the approach to satisfying the ELOR mission requirements is based on maximum utilization of Apollo program hardware; therefore, the Apollo command and service module (CSM) and the lunar module (LM) were used as the baseline spacecraft. Modifications are suggested only where required to facilitate moving the third man to the lunar surface and maintaining optimum quiescent conditions while either or both vehicles are unmanned. In addition, no systems or technologies that are not presently qualified or in the process of being qualified for space application were considered for usage. Changes in modules and systems were held to the minimum, being limited to only those required to assure a reasonable probability of crew safe return (P_s) and the 90-day stay time (P_{90}).

The ELOR spacecraft launch configuration is essentially the same as that of Apollo II, as described in Reference 3.2. The recommended changes do not materially affect the external appearance as shown in Figure 3-1. The flight profile is basically that of Apollo, except for the 90-day quiescent mode.

Achieving the proposed mission is dependent on two basic factors:

1. The Apollo mission is both feasible and reliable.

2. The addition of the 90-day dormancy period does not impose any stress on the systems that exceeds their present qualification limits. The additional life requirement for components operating during the quiescent phase remains the major exception.

These factors are expected to be satisfied for both the LM and the CSM. Operating systems and/or components, of course, will have to be tested to demonstrate the lifetime requirements; however, only the components involved in the quiescent-state control mode are affected.

3.2 COMMAND MODULE CONFIGURATION

The Block II command module (CM) will require little or no structural changes and only very minor modifications. The changes required for the Block II configuration are presented in Table 3-1. These changes result

from the functions added to facilitate the quiescent mode of operation during the unmanned phases of the lunar orbit. The location of the proposed additions, deletions, and modifications to the Block II CM are indicated in Figure 3-2.

Two CSM concepts evolved from the study, the one proposed by LMSC as the baseline mission through Reference 1.2 and the one resulting from the SD analysis. Both were analyzed insofar as they affected safe return and its associated requirements. The differences in the two concepts evolve around the electrical power source used and the resulting impact on CSM injected weight. The LMSC concept recommended use of fuel cells throughout the mission; the SD concept suggests the possibility of using two modified SNAP-27 radioisotope thermoelectric generators (RTG).

Table 3-1 reflects the resulting requirements imposed on the CM by the ELOR mission using both the recommended SD concepts (2 RTG's) and the LMSC concept (fuel cells). The proposed changes would increase the weight of the CM by up to 233.9 pounds for the fuel-cell concept. Using the weight data from CM 107 (Reference 3-2), the CM weight would increase from 12,519.9 pounds to 12,752.8 pounds; however, a slight plus or minus variation can be expected in the included 87 pounds of ballast, depending on the resulting changes in "center of gravity" (CG) location.

The RTG concept would affect the CM as indicated in Figure 3-2 by adding the two modified SNAP-27's and a heat exchanger to the outer perimeter compartment. It would increase the CM weight by no more than 100 pounds.

As indicated by the sum of Table 3-1 and 3-2, for the RTG concept, only about 124 watts of electrical power are expected to be required for the CSM (average); the peaks are not expected to exceed 191 watts during the simultaneous transmissions to the MSFN and the lunar surface. This requirement could be lowered to about 155 if the two peaks were staggered, which represents a considerable reduction in the lower level required for the fuel-cell concept. The differences are due to the less complex quiescent concept identified in Section 4.2.1 of this volume and the elimination of electrical heaters where new data indicate they are not required or where waste heat could be used instead. Further the elimination of the heaters required to support the fuel-cell system, as well as its associated cryogenic storage and control functions, saved much electrical power.

A detailed description of the resulting subsystems and changes are presented in the respective parts of Section 4.1 as indicated in Table 3-1.

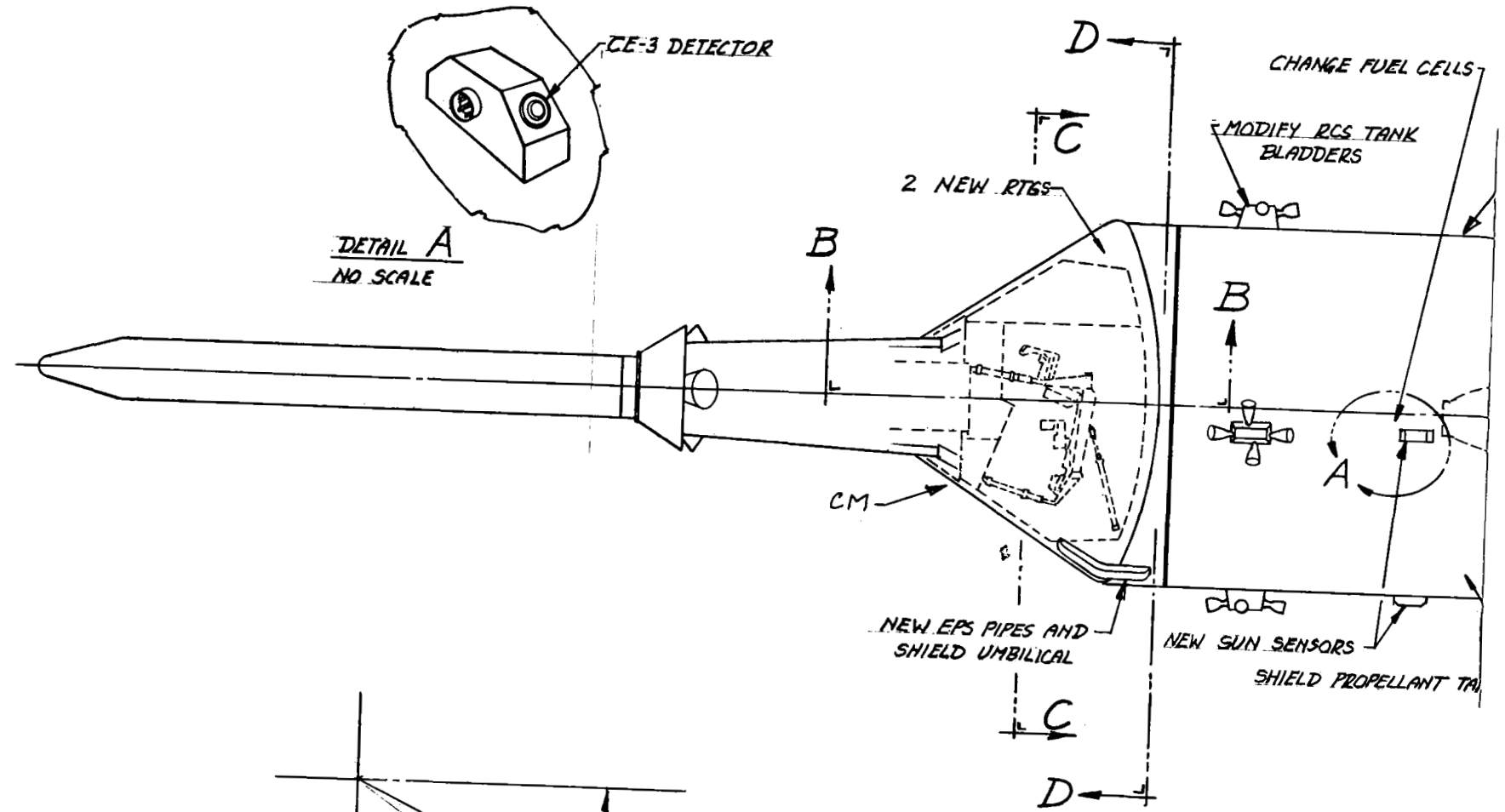

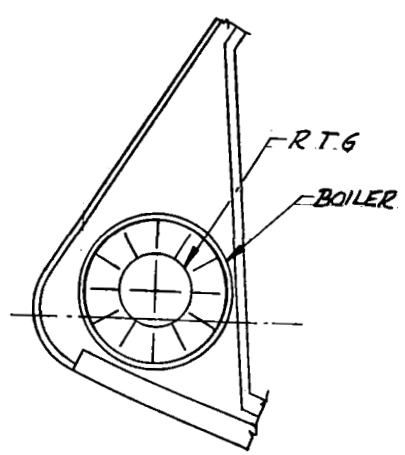

SECTION E-E
1/8 SCALE

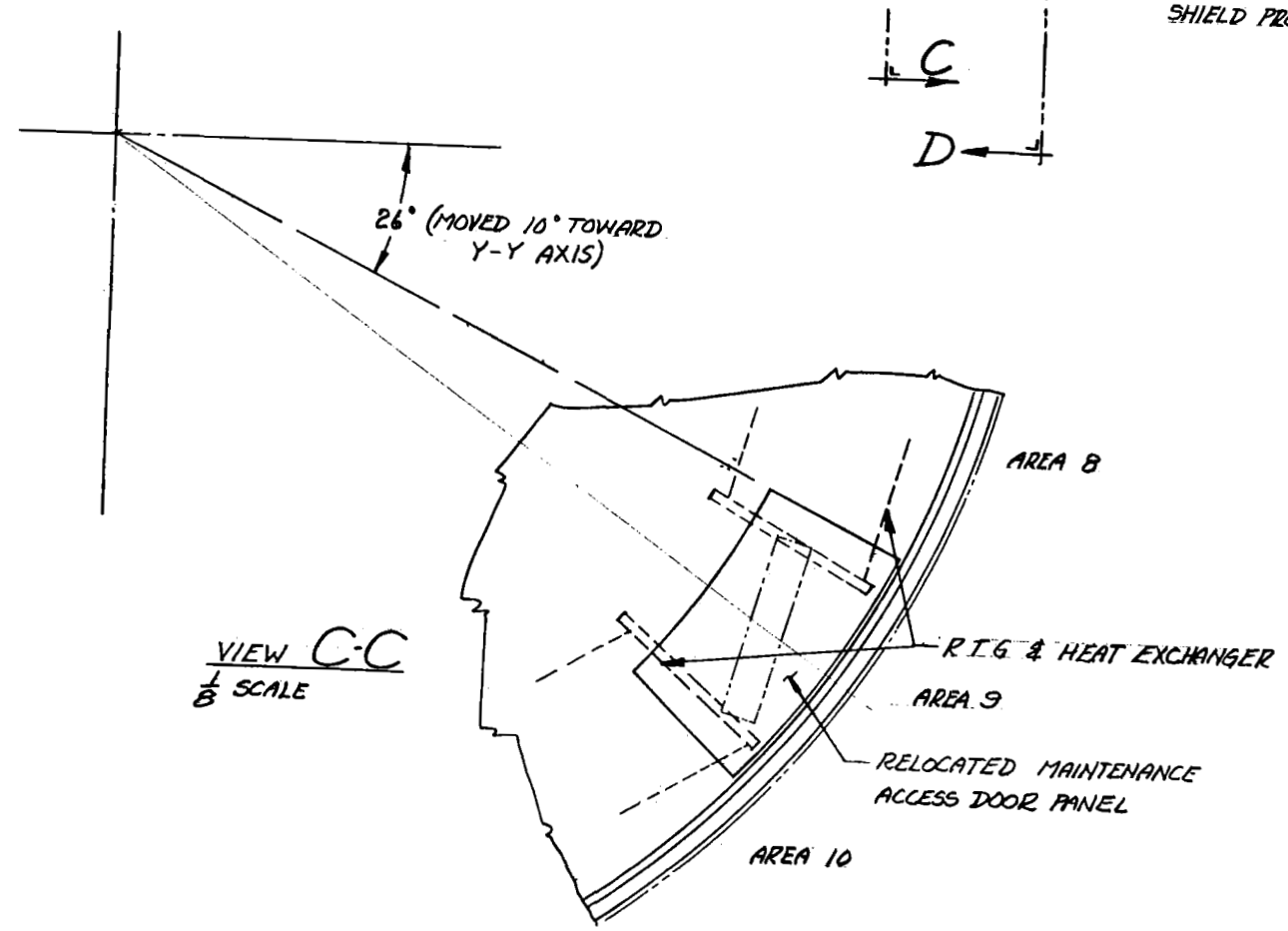

VIEW C-C
1/8 SCALE

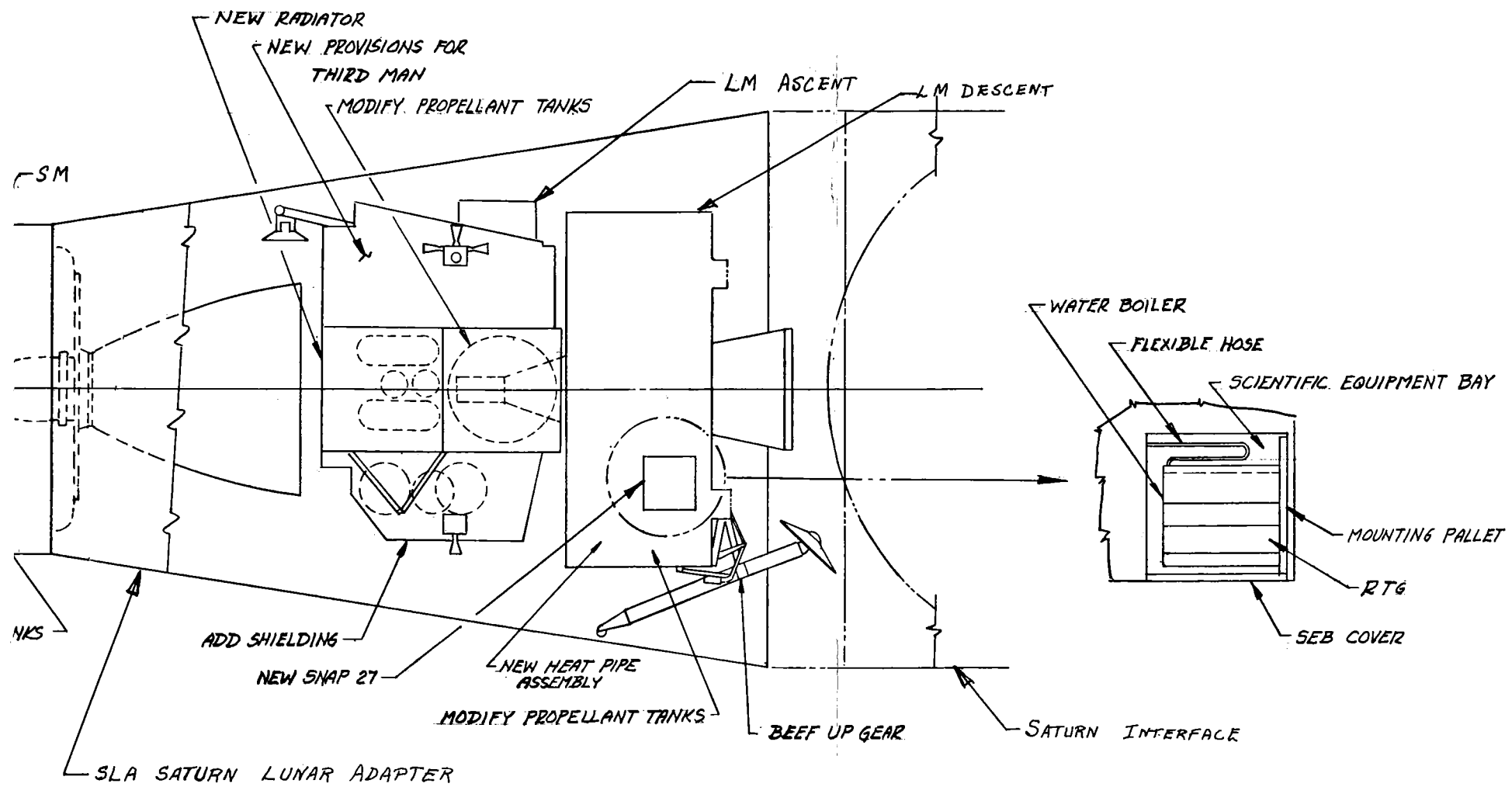

Figure 3-1. Recommended ELOR Spacecraft Configuration as Modified from Apollo Block II (SD RTG Concept)

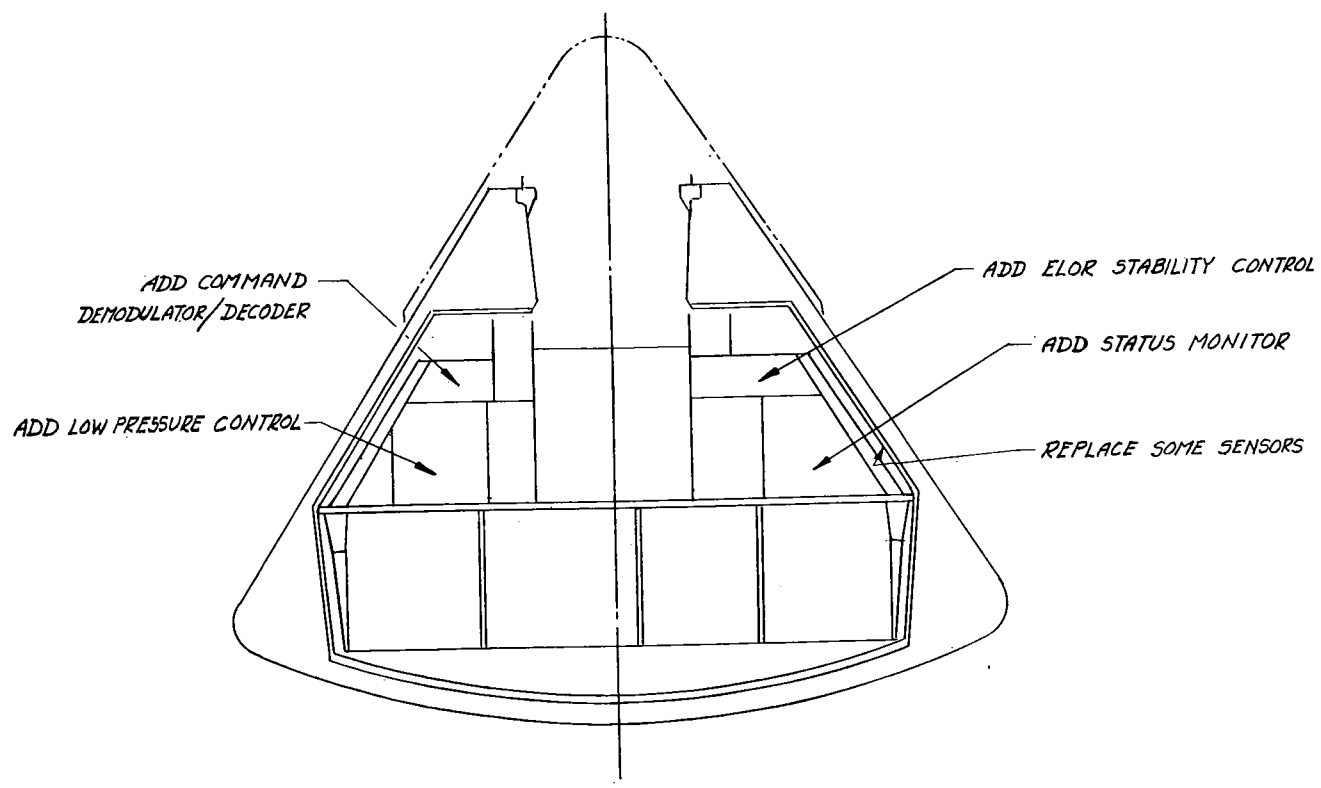

SECTION B-B
SHOWING EQUIPMENT PANEL ROTATED 90°

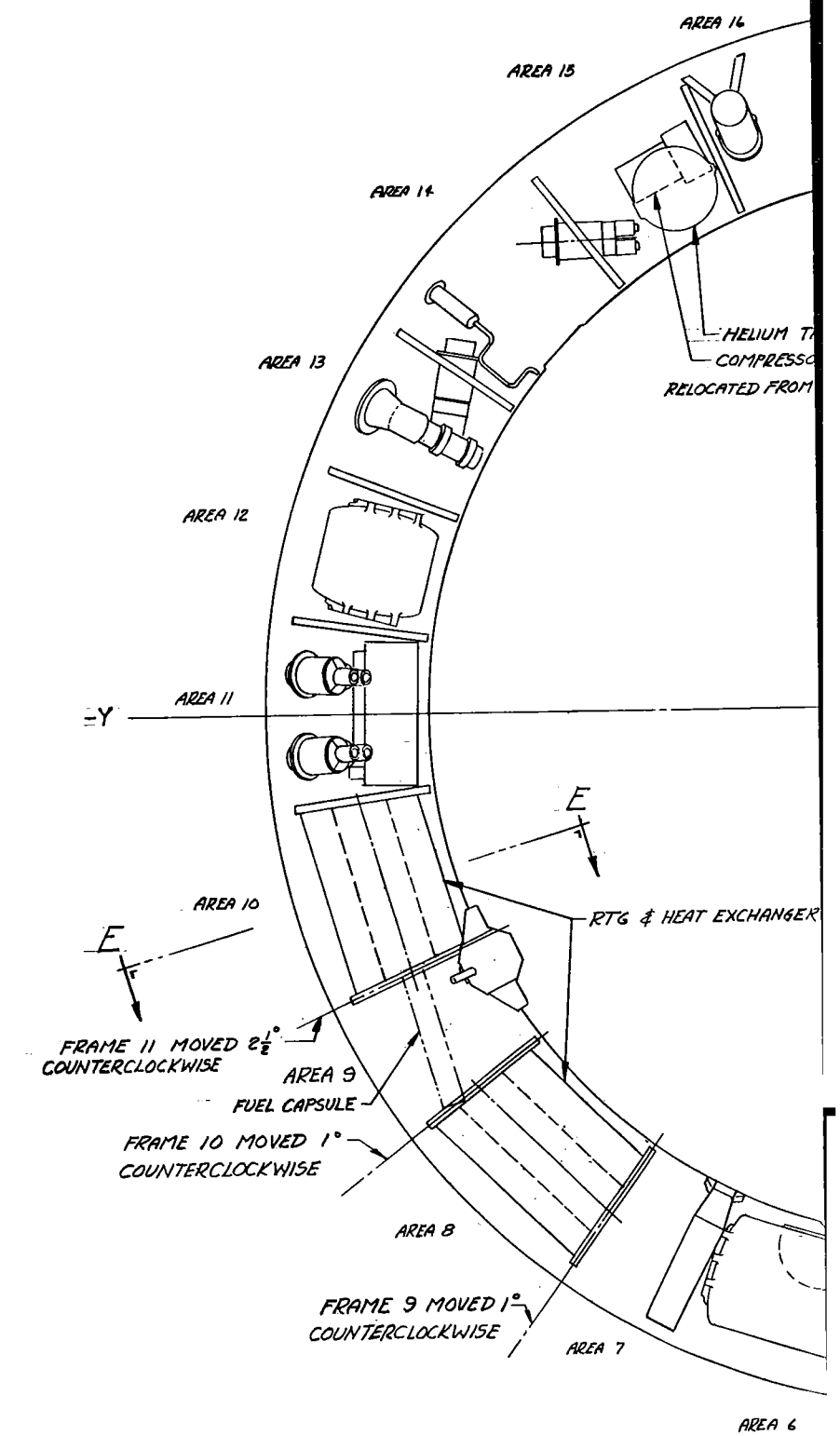

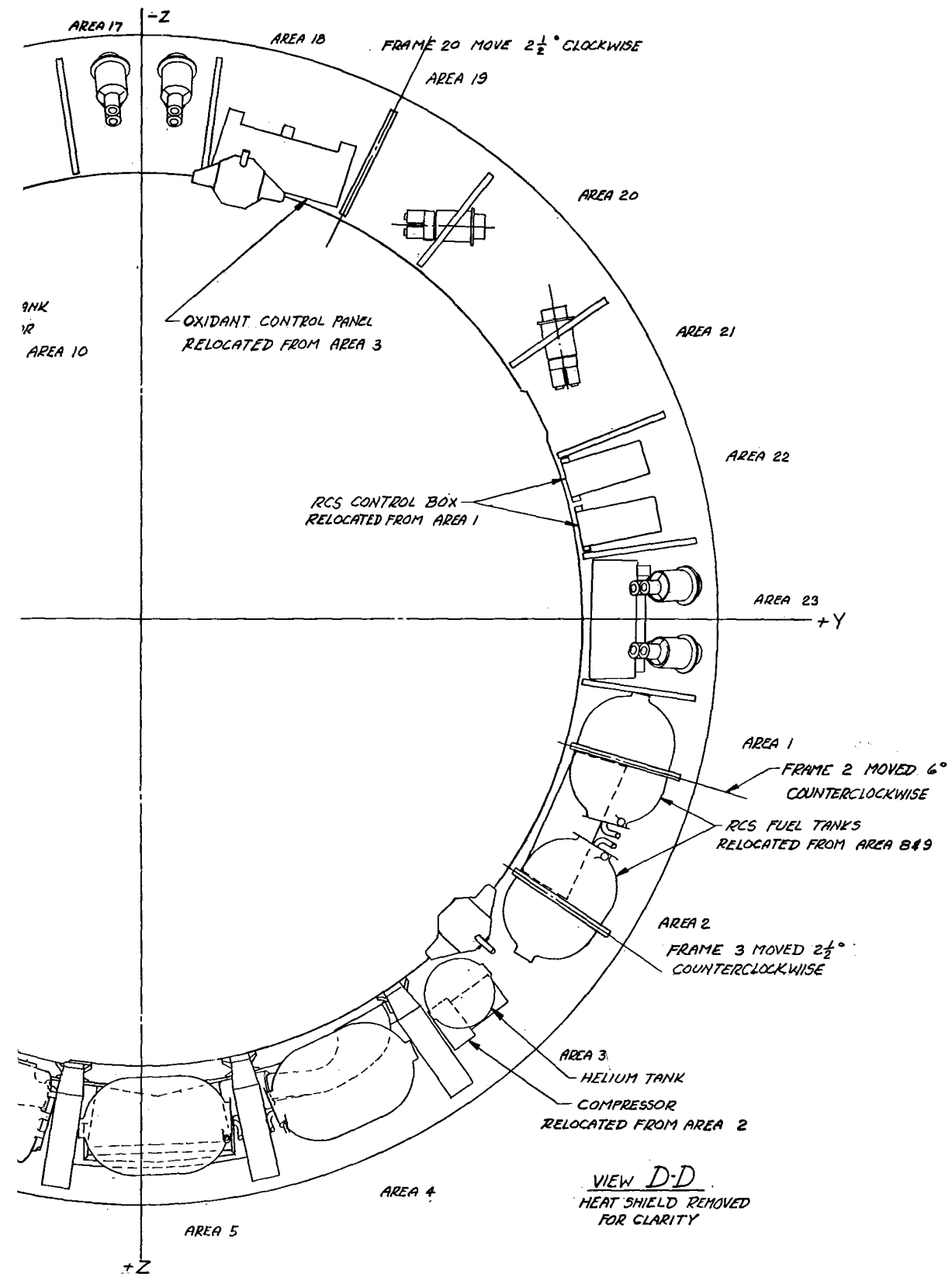

Figure 3-2. Recommended ELOR Command Module Modifications (SD RTG Concept)

Table 3-1. Command Module Recommendations and Effects Summary (Sheet 1 of 2)

Subsystem	Recommendation	Power* (Watts)	Weight (Pounds)
Structure	Meteoroid protection	0	+13.3
Electrical power (See Section 4.1.1)	1. Add restart control for fuel cells	0	+0.5
	2. Replace pyro batteries with a silver oxide-zink derivative.	0	+16.5
	3. Replace reentry batteries with silver oxide-zink type for longer life.	5 (avg)	+16.5
	4. [Add two SNAP-27A's for quiescent power.*]		[+100]
Environmental control (See Section 4.1.2)	1. Modify coolant loop to use EPS parasitic heat in CM.	48.0	+19.4
	2. Add quiescent state O_2 control loop.	2.0	+3.2
Guidance and navigation (See Section 4.1.3)	1. Eliminate standby function for quiescent mode (requires qualification tests).	0.0	0
	2. Make provisions to cannibalize LM system after rendezvous as required. (M&R at box level)	0.0	0*
Stability control (See Section 4.1.4)	1. Add ELOR stability system.	27	+10.0
Communications and data (See Section 4.1.5)	1. Add status-monitoring equipment.	4.0	+18.0
	2. Add 2 S-band power dividers	0.0	+3.2
	3. Add command demodulator/decoder.	4.3	+4.3

*Add 143 pounds for G&N if desired; not required to meet Apollo II objectives; cannibalization of LM system recommended.

Table 3-1. Command Module Recommendations and Effects Summary (Sheet 2 of 2)

Subsystem	Recommendation	Power* (Watts)	Weight (Pounds)
Communications and data (See Section 4.1.5) (Cont)	4. Modify unified S-band equipment. 5. Modify UHF/AM (add one connector). 6. Add omnidirectional antenna.	2.5/26.2 2.0/36.2	+2.4 +0.1 +14
Instrumentation	Add sensor/signal conditioners.	22	+1.5
Entry reaction control	Apollo II without change.	0	0
Up-data link (See Section 4.1.7)	1. Modify installation for USBE/AGC Cont.	8.9/0	0
Central timing equipment	Apollo II without change.	0	0
Earth landing	Apollo II without change.	0	0
Other	Add spares and redundancy.	Included in above	111
Totals	Basic Systems With spares	116.8 (avg) 183.6 (pk)	222.9 333.9**

*For quiescent mode only.
**Add 143 pounds for G&N if desired; not required to meet Apollo II objectives, cannibalization of LM system recommended.
[ ]SD concept only

Table 3-2. Service Module Recommendation and Effects Summary

Subsystem	Recommendation	Power* (Watts)	Weight Δ (Pounds)	
			Fuel Cells	SNAP-27 A
Electrical power source (See Section 4.2.1)	1. Replace P&W PC3A-2 with the PC8B-1 or Allis Chalmers equivalent (Note 1).	[65]	-258	-324
	2. Modify plumbing for restart capability.	0	+5	+5
	3. Modify coolant loop (Note 1).	0	+5	+25
SM reaction control (See Section 4.2.2)	1. Modify fuel and oxidizer tank bladder (Note 3).	0.05 (avg)	0	0
	2. Add fuel and oxidizer storage tanks and associated plumbing.	0	+96**	0
	3. Add 2 sun sensors to exterior.	0	+4	+4
Propulsion (See Section 4.2.3 and 4.2.4)	1. Increase fuel and oxidizer tankage as indicated in Figure 3-3.	0	+50**	0
	2. Add Helium storage tank.	0	+10**	0
Antenna (See Section 4.2.5)	Apollo II without change.	0	0	0
Cryogenic storage (See Section 4.2.6)	Replace and relocate H_2 and O_2 storage tanks (Figure 3-3).	[48 (avg)]	+678**	0 (May be lighter)
Structure	Basic Block II unchanged; add insulation, support elements, and meteoroid protection (Note 2).	0	+400	+273
Instrumentation	Modify status sensors and connections.	7.0	+3	+3
	Dry		993	-14
	Consumables		4580	-623
Total change based on SC 107 fully loaded		7.0/120	5573	-637

*Quiescent state only
**LMSC estimates
[ ] Required just prior to launch only.

Note 1 Replaced with long-life fuel cells, 3 with LMSC concept, 2 plus dual SNAP-27 for SD concept, the SD concept requires reentry of SNAP-27 with the CM.

Note 2 Depends on meteoroid model and puncture physics (as yet undefined).

3.3 THE SERVICE MODULE CONFIGURATION

The service module (SM) configuration is affected considerably by the differences in the power source concepts. When the RTG's are used, few or no changes are required in the SM since the two RTG's are put into the CM as indicated in Figure 3-2. When the all-fuel-cell EPS concept is used, extensive internal changes are required in the SM (Figure 3-3). The differences in the concepts have their greatest impact on the overall weight of the injected SM and its development schedule.

Table 3-2 is a list of the SM modification requirements and their impacts on the subsystem of the SM. Neither the basic SM structure nor the engine design is disturbed. Beyond these changes, the differences are extensive as discussed in the following paragraphs.

The all-fuel-cell concept calls for replacement of the three present P&W cells with a longer life version, one of three to operate during the quiescent stage for a full 90 days. This concept requires a much larger fuel capacity, which may be achieved by replacement of the cryogenic storage system with a new and unqualified subcritical storage system. This change adds about 678 pounds for tankage and structural supports. In addition, more cryogenic H_2 and O_2 are required for operation of the fuel cell for the 90-day period. In turn the addition of RCS fuels and oxidizer as well as propulsion fuel and oxidizer are required. About 5,156 pounds are added to the SM weight to meet the quiescent power requirement for the 90-day dormancy, even with the 258-pound weight saving derived from use of the new cells.

The RTG concept calls for shutdown of all fuel cells (only two may be required) during the quiescent phase and use of two modified SNAP-27's for both electrical power and parasitic heat. Results of this concept are reflected in the weight and P_{90}. The dry weight of the modified SM could be reduced below the Block II weight. At the same time, the EPS contribution to P_s is improved substantially (per Section 4.2.1).

In addition to the RTG's, the recommended concept calls for replacement of the fuel cells with the improved version, addition of two sun sensors, increased meteoroid protection, and some minor plumbing changes. The resulting SM configuration is much safer than its Block II counterpart and somewhat lighter. Furthermore, examination of the cryogenic requirements may show weight savings there as well.

3.4 LM ASCENT STAGE

NOTE: Much of the information used herein was provided by the Grumman Aircraft Company through Reference 3-2.

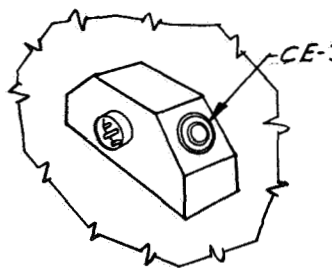

DETAIL C

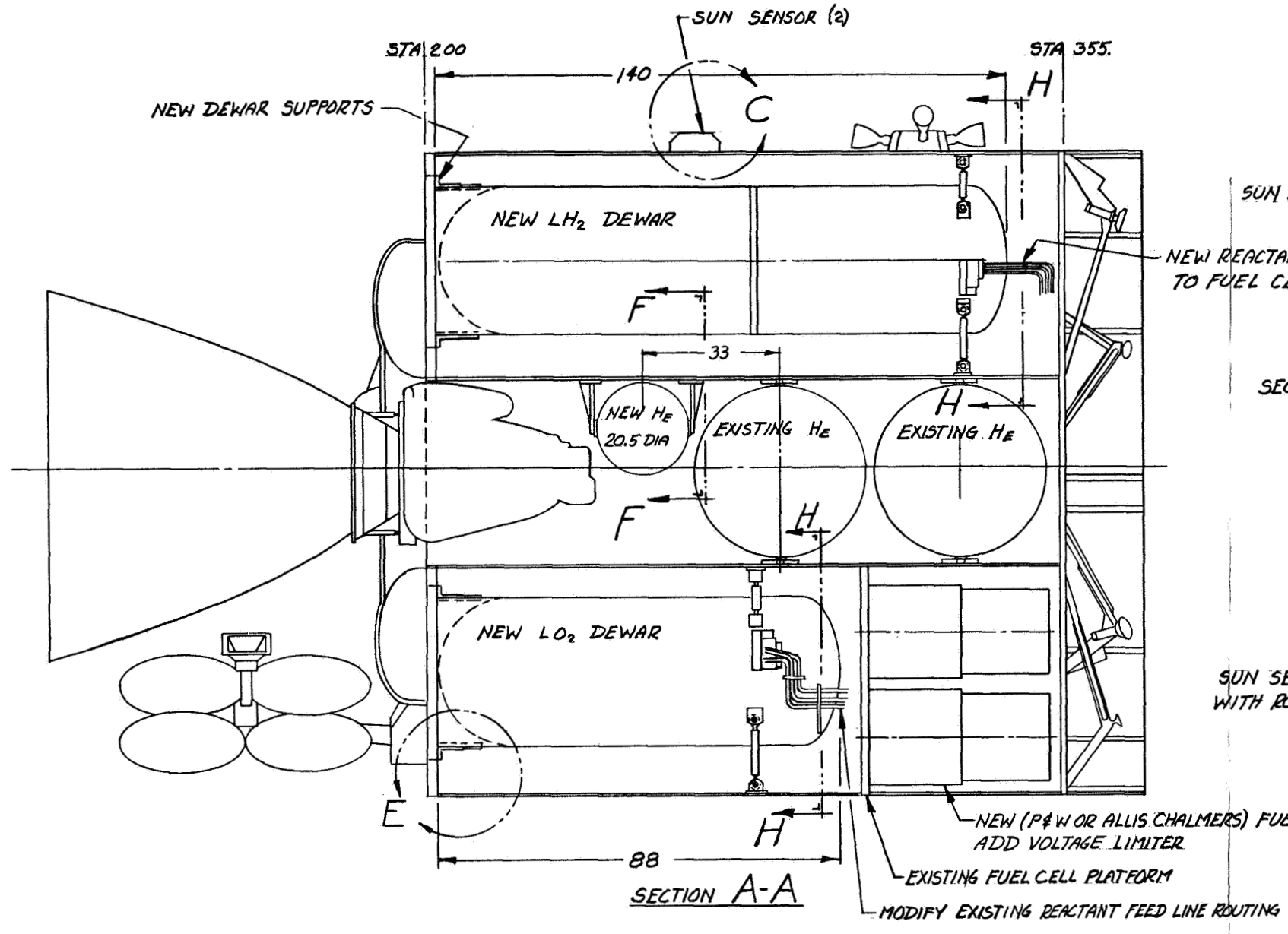

SECTION A-A

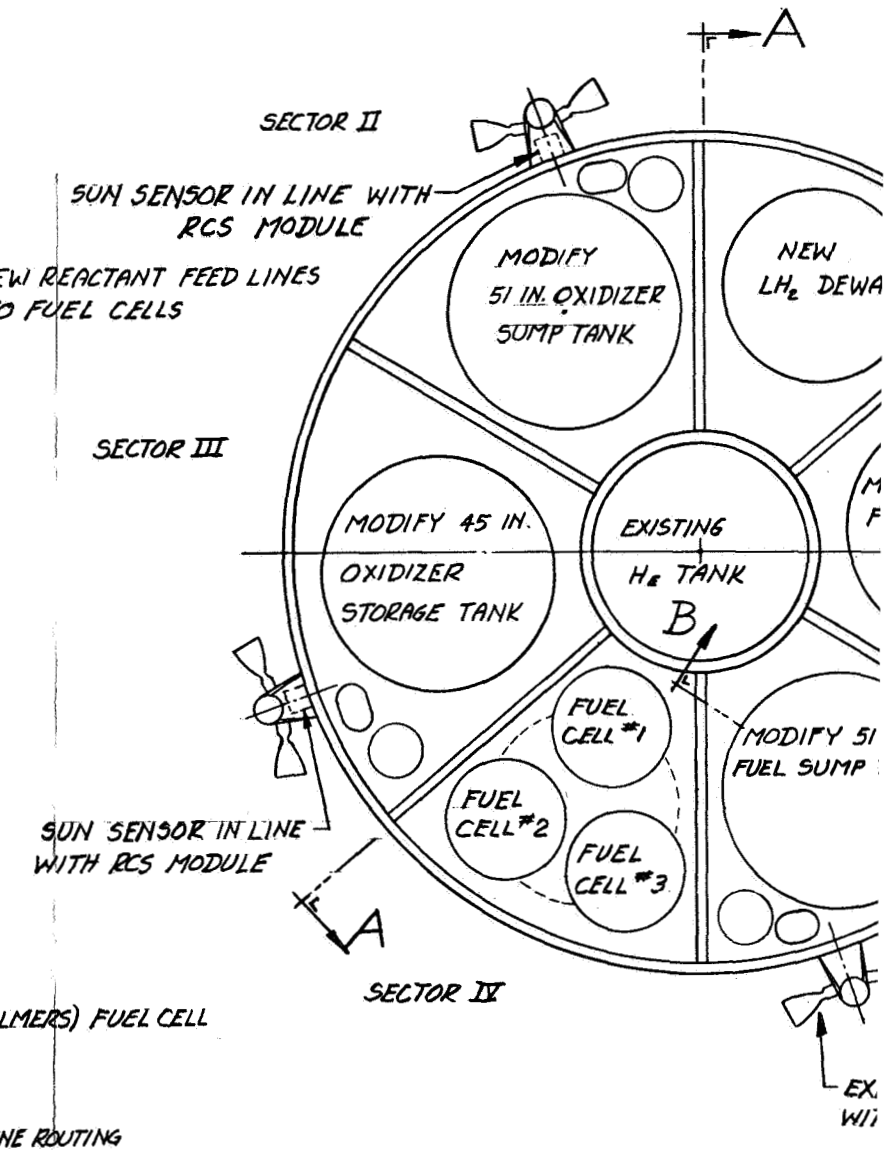

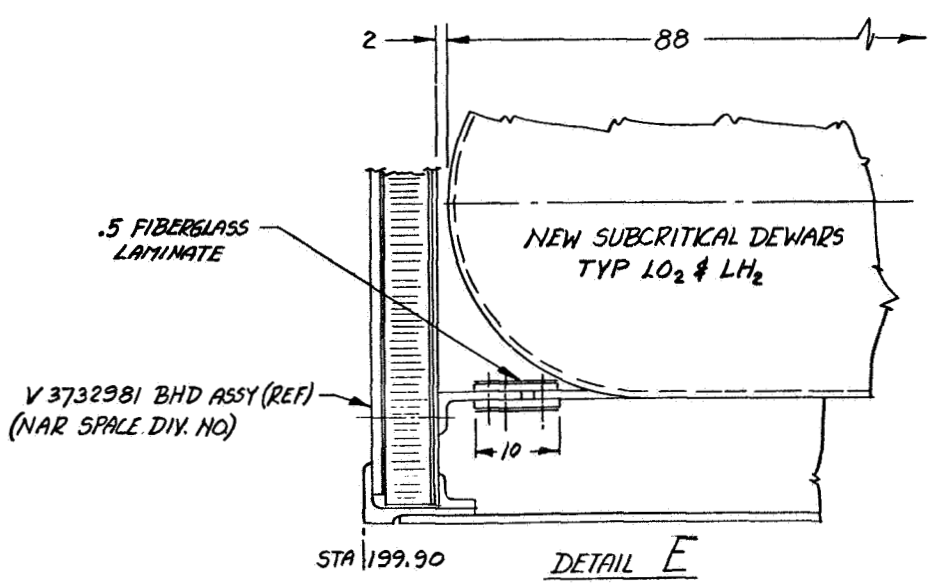

DETAIL E

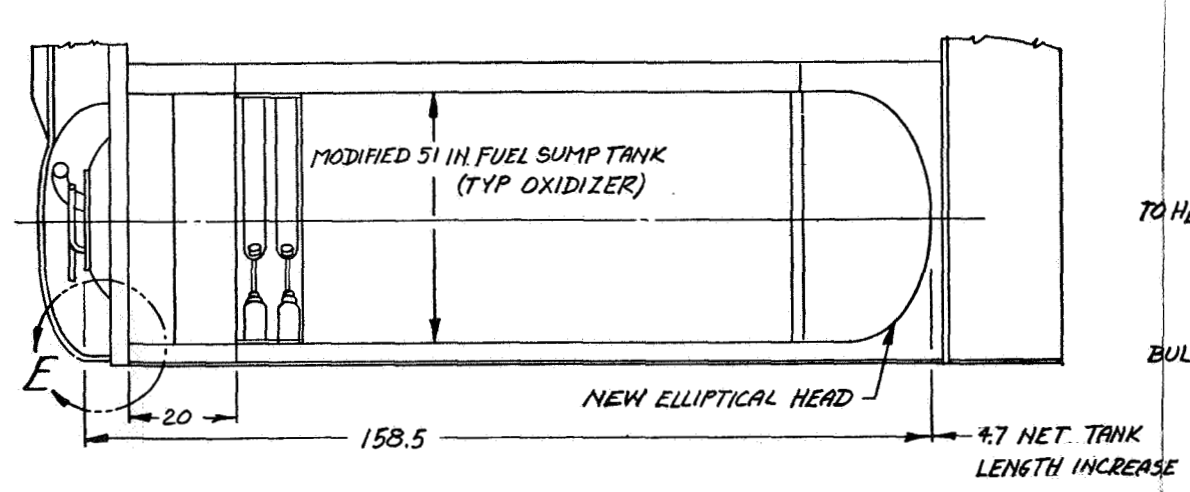

SECTION B-B

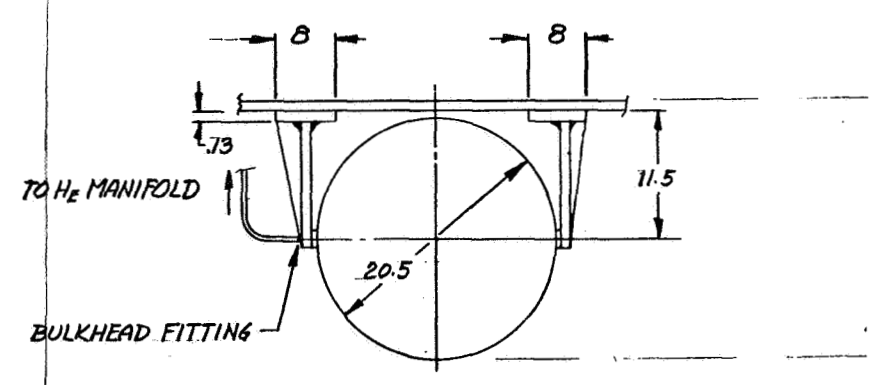

NEW HELIUM TANK & SUPPORT

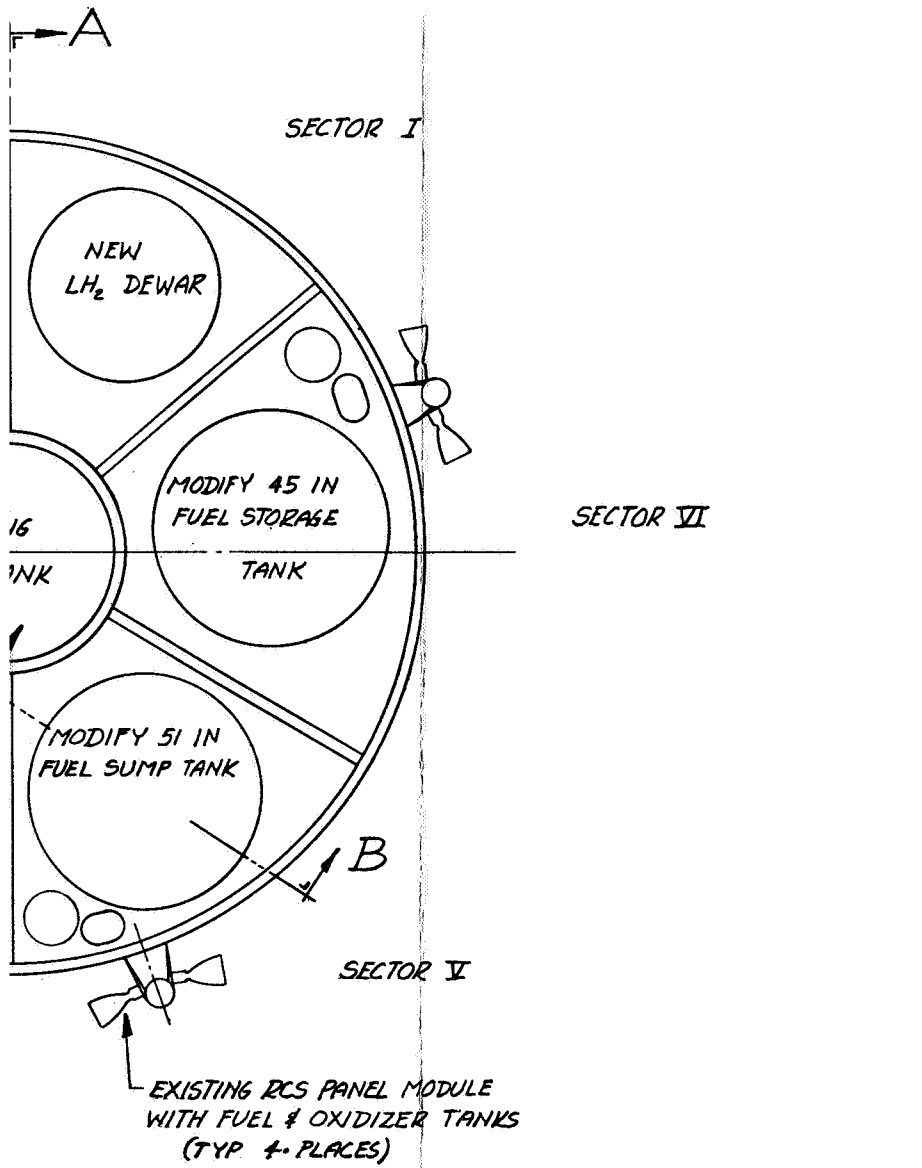

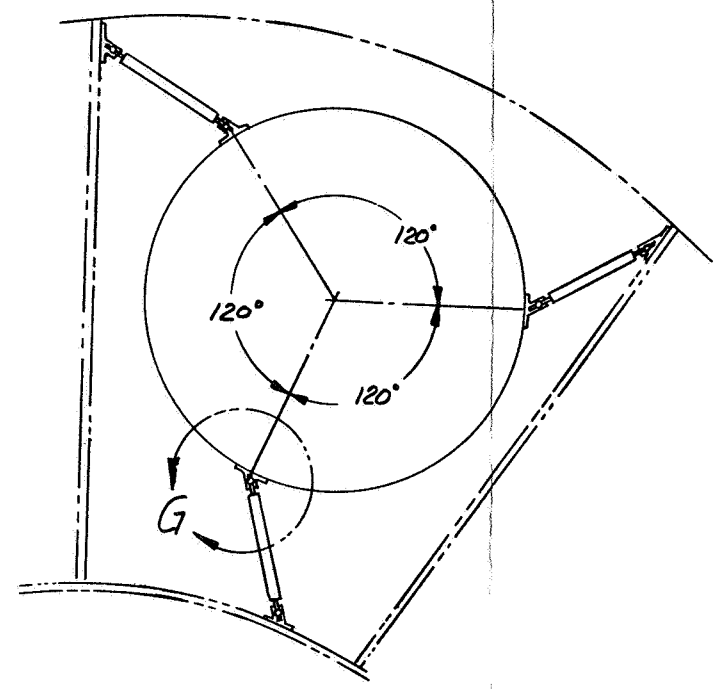

SECTION HH
TYPICAL MOUNTING FOR
LO_2 & LH_2 DEWARS

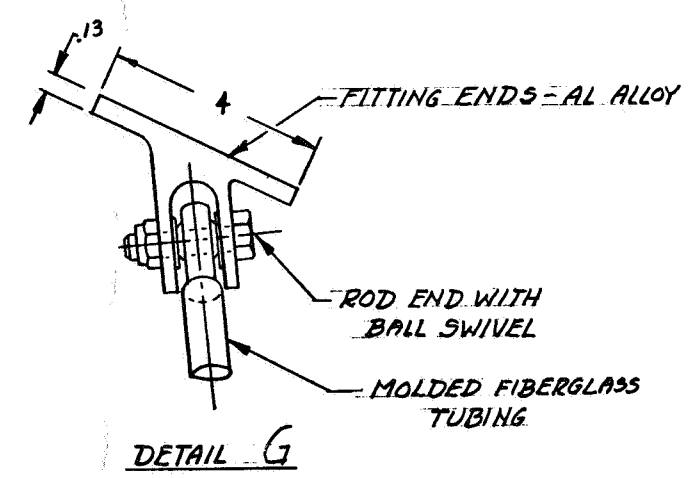

DETAIL G

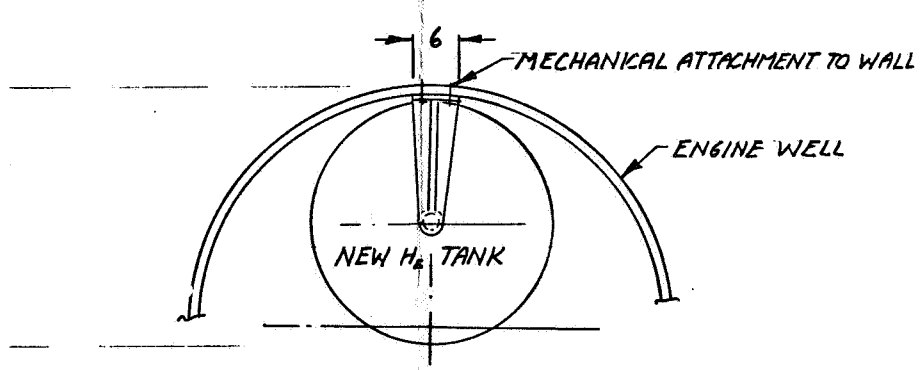

VIEW F-F

Figure 3-3. Modification for Alternate ELOR Apollo SM (Fuel Cell Concept)

The three-man ELOR LM concept provides a spacecraft that is flown in a dual-launch mission mode, making a manned lunar landing and rendezvous with a previously landed logistics vehicle, such as the LMSC early cargo stage of Reference 1-2. The LM has a very limited surface mission capability and remains dormant on the moon while the crew is supported by the logistics vehicle payload. At the end of the surface-mission phase, the crew activates the LM, and an ascent and rendezvous with the unmanned CSM is performed. The proposed ELOR configuration provides the following mission capability:

1. Lunar landing with a three-man crew near a previously landed unmanned logistics vehicle.

2. Quiescent, unmanned dormancy for a period up to 90 days.

3. Remote control of some functions of the unmanned CSM, which was left in lunar orbit.

4. Launch from the moon with the three-man crew (up to 100 pounds of payload optional), rendezvous, and dock to the unmanned CSM.

The ascent stage must be modified to accommodate the third crewman and the additional functions required to maintain equipment in a safe and ready state for the return trip. In addition, it should be ready for abort within a reasonable time. Modifications required to accomplish these functions are depicted in Figures 3-4 and 3-5, itemized in Table 3-3 along with an assessment of their ramifications, and described in detail in Section 4.3. The changes to the ascent stage are fairly extensive in appearance, but are not expected to have a commensurate effect on the development program (see Section 5.3). The increase in ascent stage injected weight is expected to total 1366 pounds, with the required additional propellant and crewman.

The power consumption during the quiescent mode could be as low as 20 watts average, the peaks going as high as 500 for very short intervals during the lunar night. The results of these minimum requirements have a profound effect on the selected power source as reflected in Section 4.4.1. Details on the ascent stage subsystems and their modifications are presented in Section 4.3.

3.5 LM DESCENT STAGE

NOTE: Much of the information used herein was provided by the Grumman Aircraft Co. through Reference 3-3.

The descent stage of the LM vehicle is to be modified to handle the additional weight and the propulsion system uprating that accompanies

increased weight. The stage is required to provide three basic functions, the last of which is the only new function:

1. The acceleration force required for a soft touchdown.

2. A launch pad for the ascent stage when leaving the lunar surface.

3. The electrical power for the stay-period.

A detailed list of the required changes by subsystem is given in Table 3-4 along with their ramifications. These changes are illustrated in Figure 3-4. The increase in stage weight is substantial, amounting to over 5,000 pounds, of which over 3,400 pounds is fuel alone. These figures are considered to be on the pessimistic side and may be reduced after a more careful study of each influencing factor. Power consumption is limited to about 25 watts—that required to recharge the batteries after warmup cycles and/or status transmissions. Details of system design proposed changes are presented in Section 4.4.

The proposed SNAP-27, batteries and the associated heat-pipe installation are new functions required to provide the quiescent-state electrical power. The installation requires some study of the design integration problem. In addition, SNAP-27 waste heat output must be piped into the ascent stage.

3.6 THE LUNAR SHELTER INTERFACE

3.6.1 Interface Causations

As a part of the 1975 mission concept as defined by LMSC (Reference 1-2), a shelter is to be sent up ahead of the LM/CSM personnel carrier. It is to provide the living and working quarters for the personnel while on the lunar surface. Since there will be no crewmen in either the orbiting CSM or the dormant LM vehicle, some interface requirements are imposed on the lunar shelter by these vehicles. The interface requirements are created by the need to be aware of the status of both vehicle systems and to be able to initiate compensating action in the event of operational anomalies.

These needs take the form of communications with the vehicle and status displays in the shelter. The extent of status data handled by the shelter as opposed to the MSFN is yet to be resolved and is beyond the scope of this study. The following is a first cut at a list of the interface requirements, particularly as they could affect the lunar shelter:

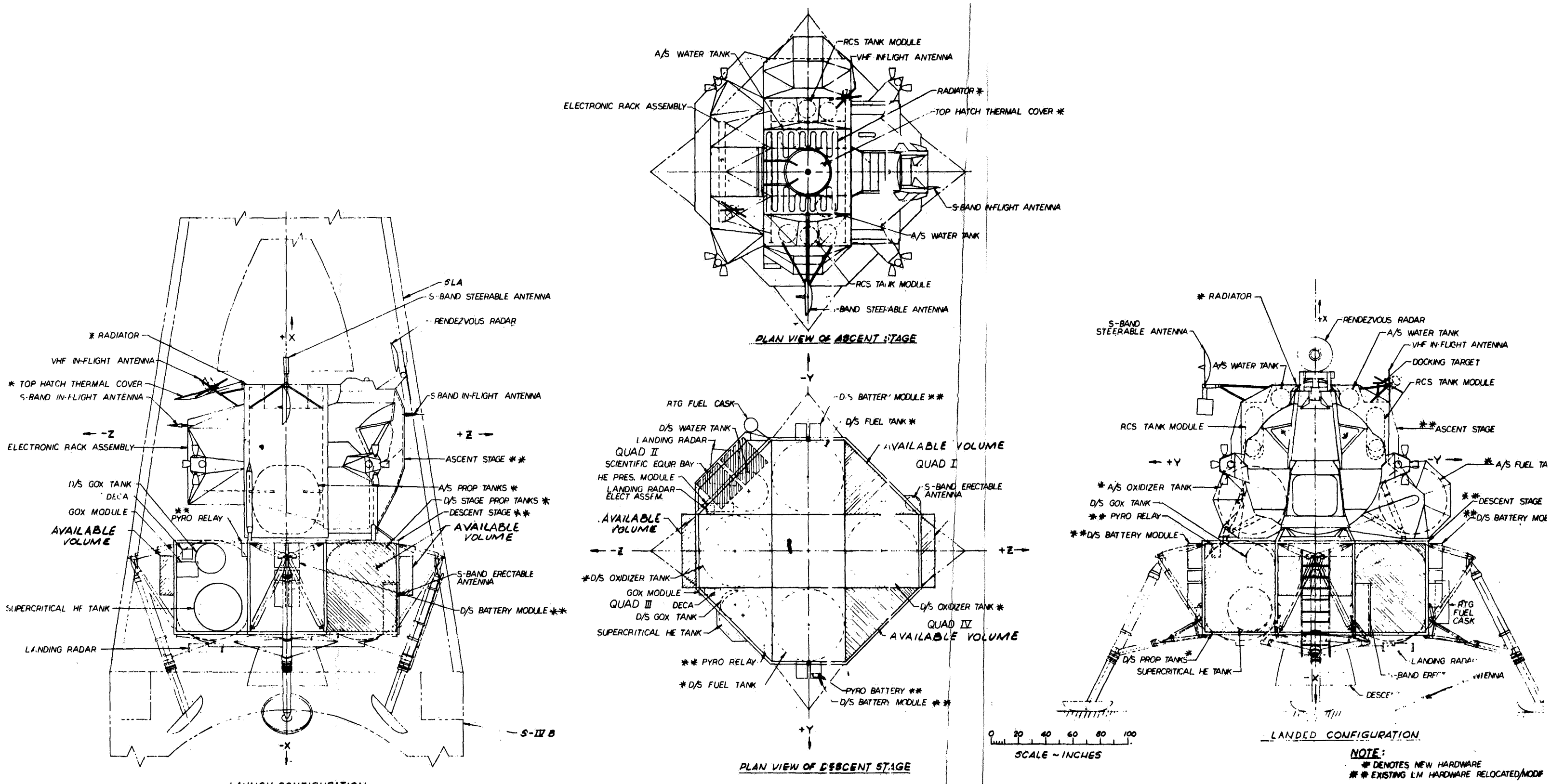

Figure 3-4. General Arrangement, Three-Man, Ninety-Day Lunar Module

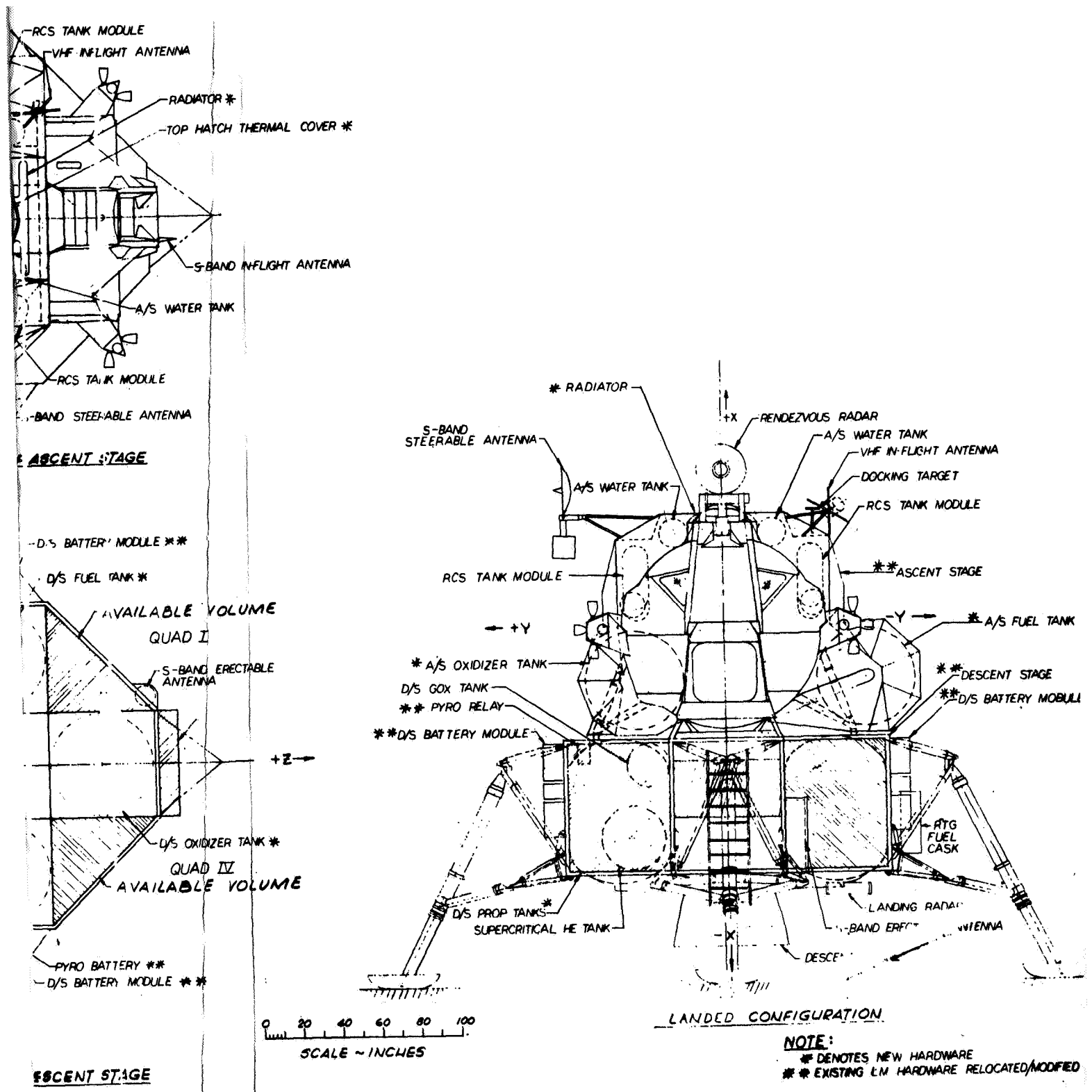

Figure 3-4. General Arrangement, Three-Man, Ninety-Day Lunar Module

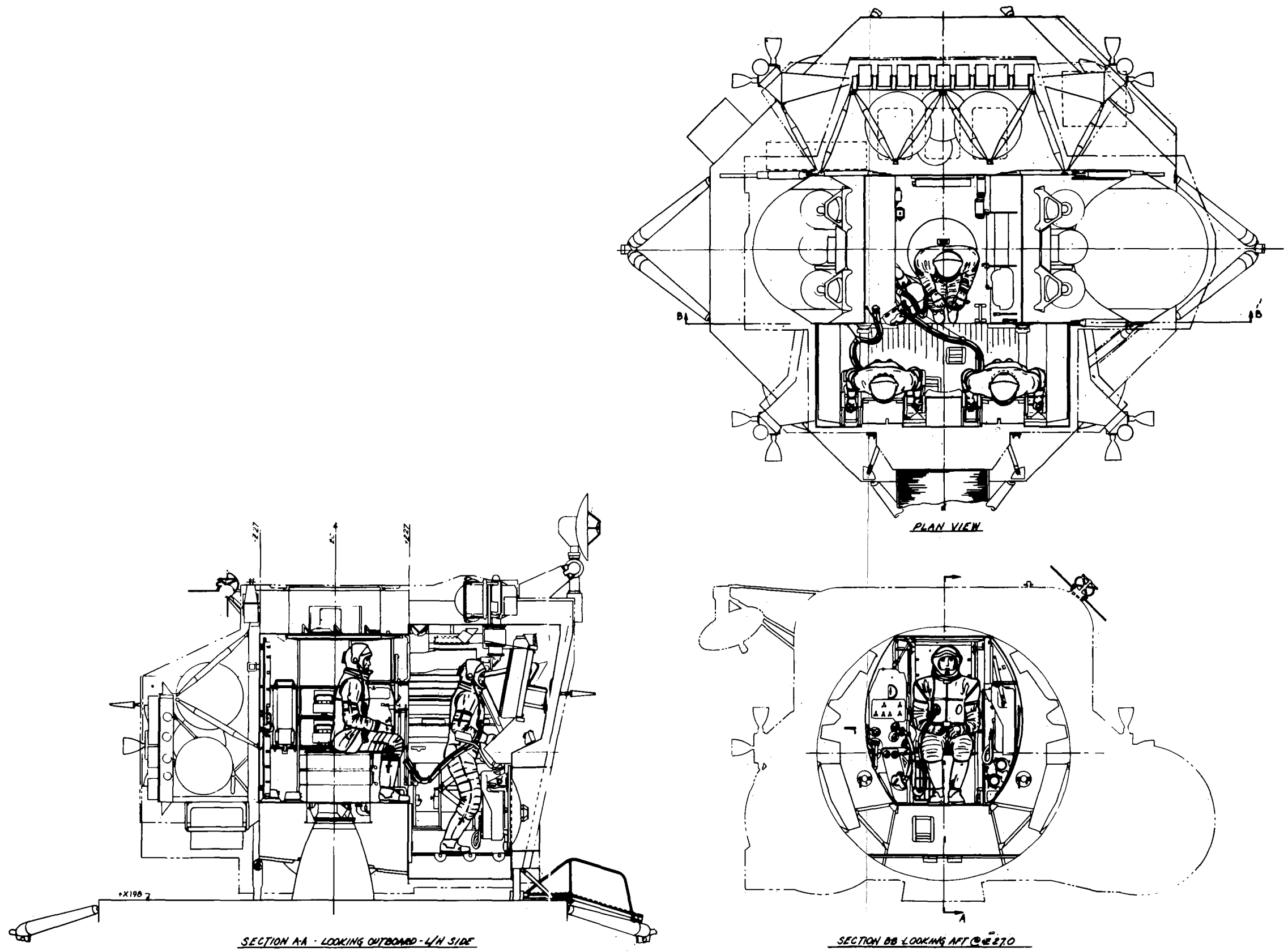

Figure 3-5. Inboard Profile, Three-Man, Ninety-Day Lunar Module

Table 3-3. Lunar Module Ascent Stage Recommendations and Effects Summary

Subsystem	Recommendation	Power* (Watts)	Weight Δ (Pounds)
Electrical power (See Section 4.3.1)	1. Replace ascent batteries with a longer-life version (silver-oxide, zinc)	0.1	+25
	2. Replace pyro batteries with dry-charge type.	0	+4
	3. Modify power distribution.	0	+30
Environmental control (See Section 4.3.2)	1. Add heat pipe assembly.	0	3
	2. Add IMU/ASA by-pass.	0	+1
	3. Add radiator and controls.	8.6	+30
	4. Third suit umbilical hose and manifold.	0	+4
	5. Add squib valve to O_2 and H_2	0	+8
	6. Add Li OH canister and other spares.	0	+8
Guidance and navigation (See Section 4.3.3)	1. Send spare components via direct lander if desired. Not necessary to meet Apollo objectives.	0	0
	2. Make provision to shut down IMU heater.	0	0
Stability control (See Section 4.3.4)	1. Add program coupler assembly.	0.8	+15
	2. Provide remote controls for CSM.	0	+15
Reaction control (See Section 4.3.5)	Add heaters to thaw fuel lines prior to launch from lunar surface.	[250]	+4
Communications (See Section 4.3.6)	1. Add command receiver and decoder.	8.2	+25
	2. Add remove control monitor (of CSM).	0	+10
Ascent propulsion (See Section 4.3.7)	1. Remove all propellant tankage.	0	-142
	2. Add new propellant tankage.	0	+170
Structure and crew provisions (See Section 4.3.8)	1. Modify thermal and meteoroid shielding.	0	+108
	2. Add top-hatch thermal cover.	0	+13
	3. Add radiation panel supports.	0	+5
	4. Modify ascent propellant-tank supports.	0	+15
	5. Add third-man restraint assembly.	0	+5
	6. Add crew transfer and support sys.	0	+80
Instrumentation	1. Add provision for status monitor.	1.7	+10
	2. Modify transducer.	0.2	+5
	3. Modify SCEA/CWEA.	0.2	+10
	4. Remove tape recorder.	0	-2
	5. Add third-man functions.	0	+25
	6. Remove TV and cable.		-9
Totals (dry)	Third crewman and equip.	19.8	475
Others	Third crewman and equip.		290
	Add propellants		601
Total injected weight			1366

*Quiescent phase power only.
**With spares indicated in respective section.
[ ]Required just prior to launch only.

Table 3-4. Lunar Module Descent Stage Recommendation and Effects Summary

Subsystem	Recommendation	Power* (Watts)	Weight Δ (Pounds)
Quiescent electrical power (See Section 4.4.1)	1. Replace four descent batteries with eight long-life silver-cadmium batteries.	25 (avg)	+690
	2. Add voltage regulator and battery charger.		+30
	3. Replace pyro batteries with longer life type.		+1
	4. Add SNAP-27 (modified) and converter.		+52
	5. Add PLSS batteries (third man).		+20
Descent propulsion (See Section 4.4.2)	1. Replace propellant tank with larger size.	0	+155
	2. Modify propellant tank plumbing and gaging.	0	0
	3. Add ablative to engine thrust chamber.		+7
Structure	1. Beef up descent stage.	0	+400
	2. Add propellant tank supports.	0	+22
	3. Beef up landing gear.	0	+100
Totals dry		25	1507
Consumables	1. Increase descent propellant quantity.		+3434
	2. Add helium and water.		110
Total injected weight delta			5051

*Quiescent phase, average power required.

3.6.2 Shelter Communications Provisions

1. Between CSM and shelter.

   a. Command message generator (as in LM).

   b. CSM status monitor/decoder.

   c. CSM status display/alarm.

   d. VHF complement of equipments, as provided on LM.

   e. Possible need for VHF antennas of 3 to 6 db gain (requires further study).

   f. Signal processor assembly.

2. Between LM and shelter.

   a. LM status monitor/decoder.

   b. LM status display/alarm.

   c. VHF complement of equipments as provided on LM. (Same complement as under 1d above, and would be time-shared for CSM, LM, and EVA links.)

   d. Signal processor assembly, LM (time-shared).

3. Between shelter and EVA crewman.

   a. VHF complement. (Same as under 1 and 2 above and time-shared for CSM, LM and EVA links.)

   b. EVA antenna (vertically polarized single element).

   c. Signal processor assembly, LM (time-shared).

4. Between shelter and earth MSFN.

   a. S-band transceivers similar to LM.

   b. S-band erectable antenna as used with LM.

   c. Solid-state S-band power amplifier. (Recommended for high reliability for extended 90-day usage.)

d. Signal processor assembly, LM. (This item would be time-shared among other links given above under 1, 2 and 3.)

e. Data up-link assembly.

f. CSM status monitor and display/alarm. (Same units as under 1 above, but listed here to interface with S-band receivers for the case of CSM status relayed CSM/earth/shelter. This function could be accomplished via the up-data link with a few modifications or as baseband signal replacing PRN range code.)

4.0 SYSTEMS ANALYSIS

4.1 COMMAND MODULE SYSTEMS*

This section is an analysis of the Apollo Block II command module (CM) systems as modified and applied to the ELOR Mission. Details are presented on the ELOR system functional requirements; the system description is presented only where required to reflect the differences between the ELOR concept and that of Apollo II. For details on the unchanged Apollo systems, see Reference 3-1. As developed in the following analysis and in Section 4.2.1 on the SM electrical power plant, two concepts for CSM power generation are considered: the fuel-cell concept using three fuel cells in the same manner as Apollo Block II, and the RTG concept using two or three fuel cells and two radioisotope thermoelectric generators. The latter concept is being recommended.

4.1.1 Reentry Electrical Power System

NOTE: Some of the information used herein was provided by the Westinghouse Electric Corporation through Reference 4-1, by ITT Industrial Products through Reference 4-2, and by Eagle Pitcher Company through Reference 4-3.

Functional Description

The electrical power system is divided between the command and service module. The command module is self-sufficient during the reentry and recovery phases only, receiving its power from the reentry and recovery batteries, which also provide emergency power. The normal power source for the manned phases are the fuel cells for the fuel-cell concept, and the fuel cells and the RTG's in the RTG concept. The fuel cells are in the SM and are analyzed in detail in Section 4.2.1. In the application of the RTG concept, the two RTG's are installed in the CM and are used to supply the needed power for the quiescent phase in lunar orbit. In the fuel-cell concept, one fuel cell supplies the power for the quiescent phase.

The electrical power subsystem (EPS) consists of the equipment and reactants required to supply the electrical energy sources, power generation and controls, power conversion and conditioning, and power distribution to the electrical buses (Figure 4-1). Power is supplied the command and

*A foldout sheet listing abbreviations used in Section 4.1 and their meanings is located at page 159.

service module (CSM) to fulfill all requirements and to the lunar module (LM) for operation of heater circuits after transposition and docking. The EPS can be functionally divided into four major categories:

1. Energy storage (cryogenics storage and the entry, postlanding, and pyrotechnic batteries).

2. Power generation (fuel-cell power plants and RTG's).

3. Power conversion (solid-state inverters and battery charger).

4. Power distribution (d-c and a-c power buses, d-c and a-c sensing circuits, controls, and displays).

In general, the system operates in three modes: peak, average, and minimum-mission loads. Peak loads occur during the short velocity changes, including boost. D-c power is supplied by three fuel cell power plants supplemented by two of three entry batteries. A-c power is processed through two of three inverters. During coast periods, d-c power is supplied by three fuel-cell power plants, and a-c power is supplied by one or two inverters. The RTG's are active during all phases, providing the only power during the quiescent state.

Energy Storage. The primary source of energy is provided by the cryogenic gas storage system that provides fuel (H_2) and oxidizer (O_2) to the power-generating system. Two hydrogen and two oxygen tanks with the associated controls and plumbing are located in the service module. Storage of reactants is accomplished under controlled cryogenic temperature and pressures; automatic and manual pressure control is provided. Automatic heating of the reactants for repressurization is dependent on energy demand by the power-generating and/or environmental control subsystems.

A secondary source of energy storage is provided by five batteries located in the CM. Three rechargeable entry and postlanding batteries supply sequencer-logic power at all times; supplemental d-c power for peak loads; all operating power required for entry and postlanding; and when appropriately connected, either or both pyro circuits. Two pyro batteries provide energy for activation of pyro devices when required.

Power Generation. Three Bacon-type fuel-cell power plants, generating power through electrochemical reaction of H_2 and O_2, and/or the SNAP-27A supply primary d-c power to spacecraft systems until CSM separation. For normal operation, all three power plants generate power, but two are adequate to complete the mission. Should two of the three malfunction, one power plant with nonessential loads removed will insure successful mission completion. For details, see Section 4.2.1.

FOLD-OUT #1

FOLD-OUT #2

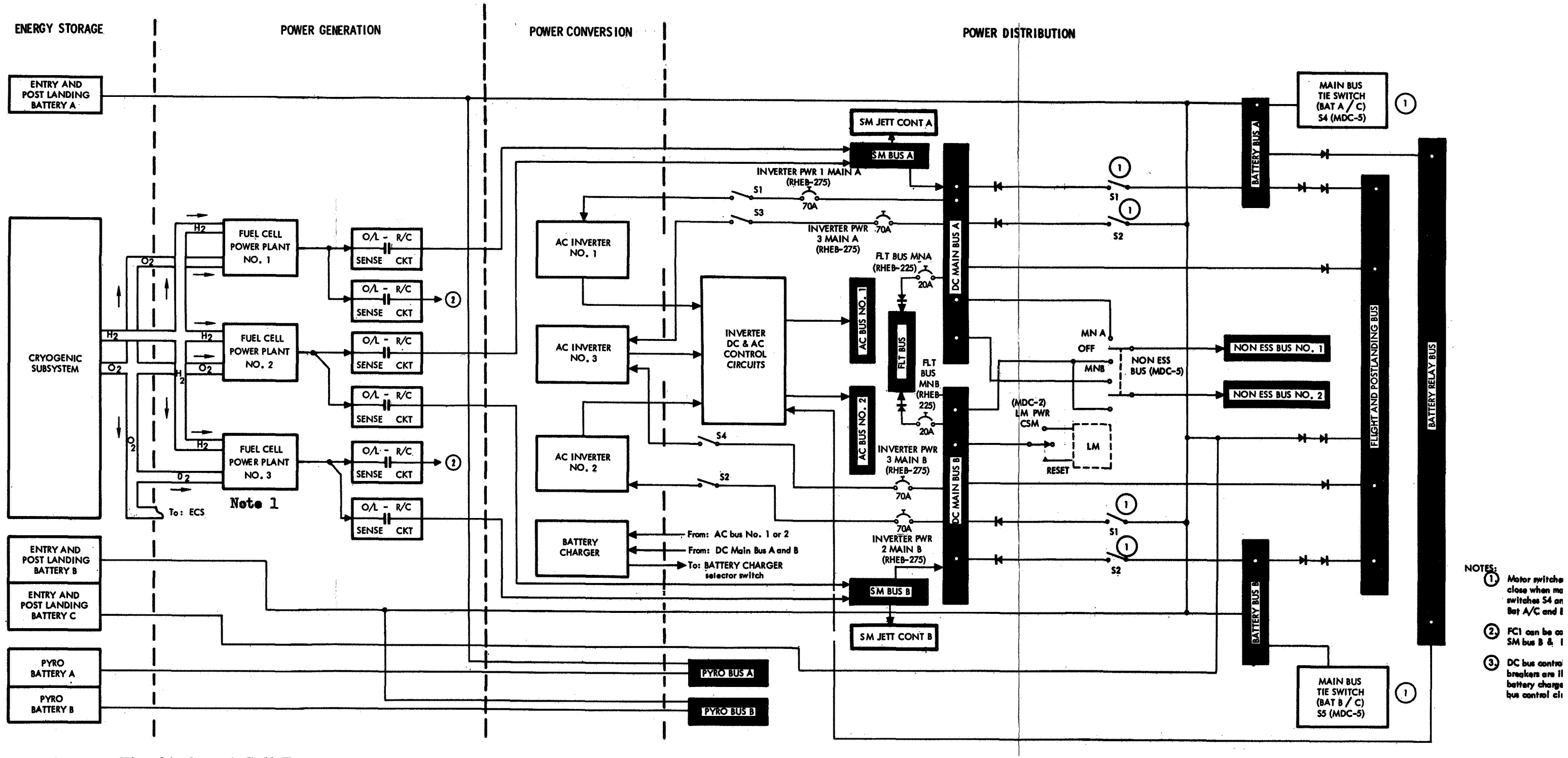

Note 1. The third Fuel Cell Power Plant is replaced with two Radioisotope Thermoelectric Generators in the recommended concept.

Figure 4-1. CSM Electrical Power System, Block Diagra
Functional Level

FOLD-OUT #2

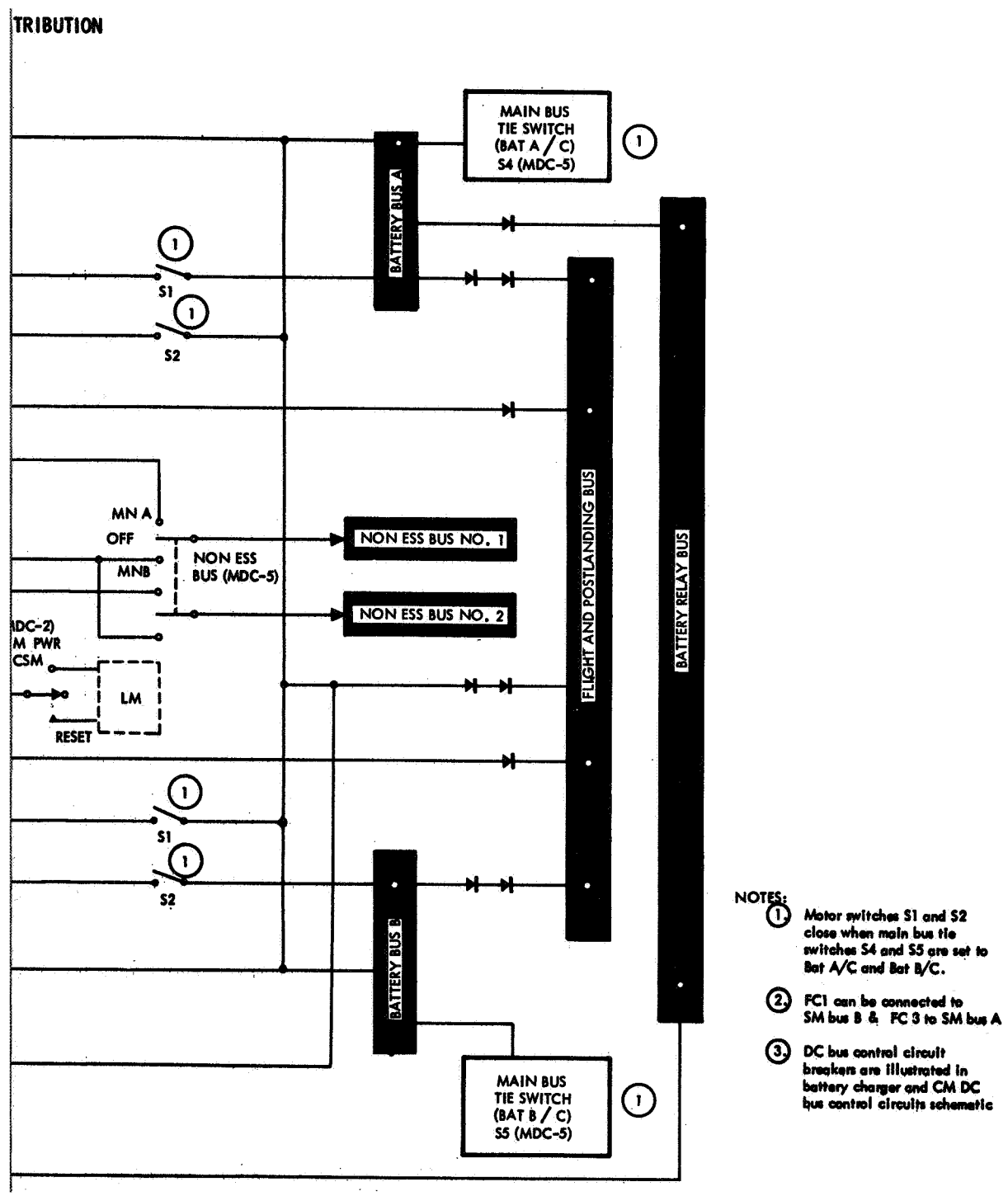

NOTES:

1. Motor switches S1 and S2 close when main bus tie switches S4 and S5 are set to Bat A/C and Bat B/C.
2. FC1 can be connected to SM bus B & FC 3 to SM bus A
3. DC bus control circuit breakers are illustrated in battery charger and CM DC bus control circuits schematic

Figure 4-1. CSM Electrical Power System, Block Diagram Functional Level

Power Conversion and Conditioning: Primary d-c power is converted into a-c by solid-state static inverters that provide 115/200-volt, 400-cps, 3-phase, a-c power up to 1,250 volt-amperes each. A-c power is connected by motor switch controls to two a-c buses for distribution to the a-c loads. One inverter has the capacity to supply all spacecraft primary a-c power. One inverter can power both buses while the two remaining inverters act as redundant sources. During velocity changes, each bus is powered by a separate inverter. Provisions are made for bus and/or inverter isolation in the event of malfunctions. Inverter outputs cannot be phase-synchronized; therefore, interlocked motorized switching circuits are incorporated to prevent connection of two inverters to the same bus.

A second conversion unit, the battery charger, assures keeping the three entry and postlanding batteries in a fully charged state. It is a solid-state device utilizing dc and ac to develop charging voltage.

Power Distribution. Distribution of d-c power is accomplished via two redundant d-c buses in the SM, which are connected to two redundant buses in the CM. Additional buses provided are two d-c buses for servicing nonessential loads; a flight bus for servicing in-flight telecommunications equipment; two battery buses for distributing power to sequencers, gimbal motor controls, and servicing the battery relay bus for power distribution switching; and a flight and postlanding loads bus.

Three-phase a-c is distributed via two redundant a-c buses, providing bus selection through switches in the a-c operated component circuits.

Power to the lunar module is provided through two redundant umbilicals, which are manually connected after completion of transposition and docking. An average of 81 watts dc is provided to continuous heaters in the abort sensor assembly (ASA) and to cycling heaters in the landing radar, rendezvous radar, S-band antenna, and inertial measurement unit (IMU). Power consumption with all heaters operating simultaneously is approximately 309 watts.

Sensing circuits monitor bus voltages and provide a warning indication of out-of-tolerance conditions. They activate disconnect relays when fuel-cell load or reverse-current limits are exceeded, when an inverter overvoltage occurs, or when current limits are exceeded.

System Analysis

The reentry electrical power system and the other component of the CM-EPS will remain substantially unchanged except for the following:

1. Replace the reentry/recovery batteries with a silver-cadmium type already developed by Eagle Pitcher Co. (Reference 4-3).

2. Add new circuit breakers to control the additional components added to the CSM.

3. Replace pyrotechnic batteries with a longer life silver-oxide zinc type.
4. Add radioisotope thermoelectric generators (SD concept only, see Section 4.2.1).

The functional requirements have not changed, except for the extended life factor; and all components are expected to meet this requirement without change. The crew safe return logic for the total EPS is as presented in Figure 4-2. The numbers above the blocks indicate the number of functioning units required for the quiescent mode.

The circuit breakers, normally considered a high-failure-hazard component, are not expected to present a problem since the number of use cycles are expected to be less than for the Apollo mission.

The EPS system contribution to the probability of safe return (P_s) may exceed 0.999 with the aforementioned changes (see Table 4-1). The one remaining weakness is the inverter; however, it may prove to be more reliable than present data supports. Westinghouse data (Reference 4-1) indicate that the inverter may actually be better than now estimated; furthermore, it can easily be improved. In any event, one additional standby unit will exceed any requirement imposed by ELOR.

The fuel cells and RTG are discussed under Paragraph 4.2.1 as part of the service module.

Table 4-1. Entry Electrical Power, Critical Components Analysis

Components	Duty Cycle	P_s	Spares	ΔWeight (Pounds)
Batteries (1 of 3)	2300 hr 100 cy	1.0	0	+33.0
Battery charger (1 of 3)	397 hr	>0.9999	0	0
Inverter (1 of 3)	2374 hr	0.9992 *	1	+52.5
Circuit breakers (1 of 2 each)	169/2374 hr < 50 cy	≫ 0.9999	0	0
Totals		≈ 0.999	1	+85.5

*With one spare.

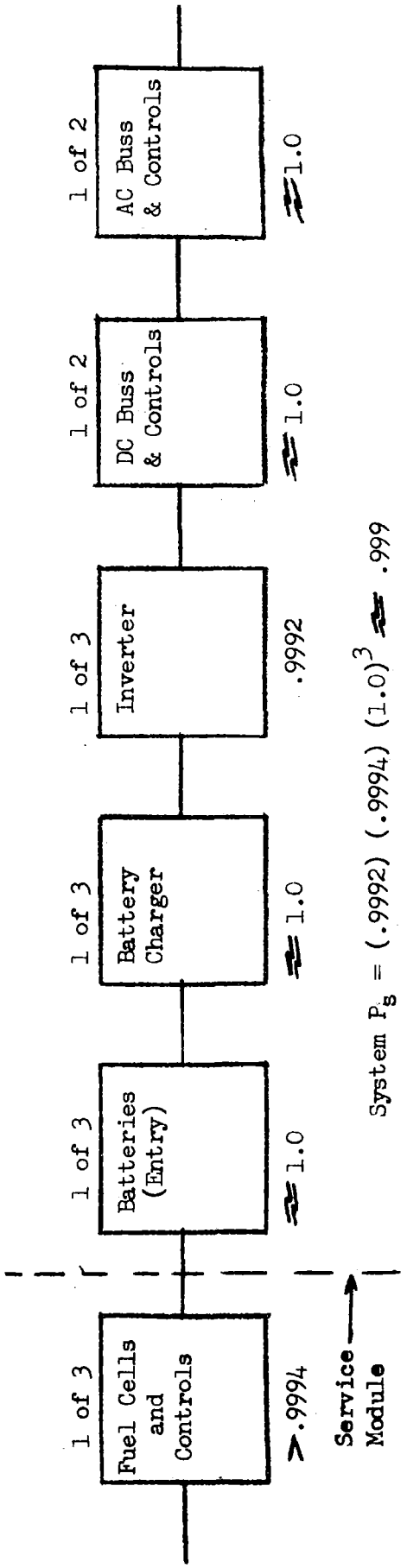

System $P_s = (.9992)\ (.9994)\ (1.0)^3 \approx .999$

Note: One additional inverter would probably raise the P_s to over .99996 since P&W states that the new fuel cells display a reliability far in excess of that used herein.

Figure 4-2. EPS Crew Safe - Return Logic

4.1.2 Environmental Control System (CM-ECS)

NOTE: Much of the information used herein was provided by the AiResearch Manufacturing Division of Garrett through Reference 4-4.

Subsystem Description

In addition to the normal Apollo requirements, the CM-ECS is to provide a means of controlling the CM quiescent-state environment for the 90-day unmanned lunar polar orbit, so that at the end of this period, when the crew returns, the ECS and other systems will be able to function in the normal manner for the return to earth. The ECS, therefore, must provide the following functions:

1. Limit temperature excursions of the cabin wall to +40 to 100 F.

2. Assure a water-glycol temperature within safe limits; i.e., above the freezing point for this mixture.

3. Protect equipment from damage due to freezing of contained water (drinking, wash and EPS by-products).

4. Maintain minimum required atmosphere pressure to prevent decomposition of spacecraft materials through outgassing and sublimation, about 0.5 psia. Variations of from 0.1 to 5.0 are expected to be tolerable.

5. Assess cabin pressure and critical temperatures; provide for critical-function failure alarms.

6. Provide remote or automatic control to switch redundant systems.

Detailed information concerning environmental heat loads imposed upon the CM cabin interior and atmosphere throughout the 90-day mission is scant. However, based upon detailed information generated by NR/SD for the lunar mapping mission of the Apollo Extension System (AES), and later Apollo Applications Program (AAP), it is anticipated that there would be a cabin heat loss from the interior into space. The lunar mapping mission called for a lunar polar orbit, where the cabin heat load computed for this mission was -1,235 Btu/hr (Reference 4-5). Extrapolation indicated that the ELOR loss could be as low as 300 Btu/hr. The bulk of the mission is expected to result in a continuous heat loss to space. This effect is substantiated by the AAP study, which gave the average equatorial lunar orbit loads as -35 Btu/hr and the maximum as +115 Btu/hr for the CM.

The total of all electrical loads within the command module is estimated to be 284 watts, or 970 Btu/hr. Not all of this electrically derived heat is rejected to the cabin atmosphere or the glycol heat-transport circuit. As revealed in recent Apollo thermal/vacuum tests, much of this heat is passively rejected to space via conduction through the vehicle structure. These tests reveal cooler-than-expected cabin conditions. Therefore, active cooling of the cabin interior and atmosphere would not be required for this mission. Rather, a nominal amount of cabin heating would be required.

Figure 4-3 presents the skeletal schematic of the active elements of the CSM ECS for the quiescent lunar orbit mode. It is noted that the heat source for the ECS glycol circuit is an intercooler heat exchanger thermally connecting the ECS and electrical-power-system (EPS) circuits. A self-positioning (Vernatherm) control valve bypasses fluid around the intercooler in order to limit the ECS glycol temperature excursions. Three ganged solenoid valves and two manual shutoff valves are used to provide the alternate flow path into the intercooler exchanger. The solenoid valves are a new design of the latching type. The shutoff valves are Apollo ECS Item 2.28 valves. The solenoid valves may be actuated remotely, whenever isolation of the ECS and EPS is desired. Because of the expected cold environment conditions, the heat absorbed by the intercooler and in the active CM cold plates is rejected passively in the rest of the inactive components of the loop. Most of the heat rejection will probably occur in the extensive inactive cold-plate network; in turn, some of this heat will be rejected to the cabin atmosphere.

The other active component in the CSM glycol loop is the glycol pump. Here a new pump selector control has been added to monitor flow rate and to automatically switch to the standby pump if the pump fails. Pumping-system status also is telemetered by this control.

The secondary glycol circuit in the CM ECS is similarly connected to the EPS through the intercooler. The intercooler is a three-fluid exchanger with passages for both ECS glycol fluids (this arrangement is directly analogous to that of the suit circuit heat exchanger, Item 1.29). A second control valve and three more ganged solenoid valves are required. The circuit is normally inactive. In emergencies, it may be activated remotely by turning on the glycol pump in the loop.

Cabin pressurization is maintained by two fixed-area bleed devices on the 1,000-psi oxygen supply line. The bleed devices are new concepts and have yet to be designed; several types are available commercially, however. Some of

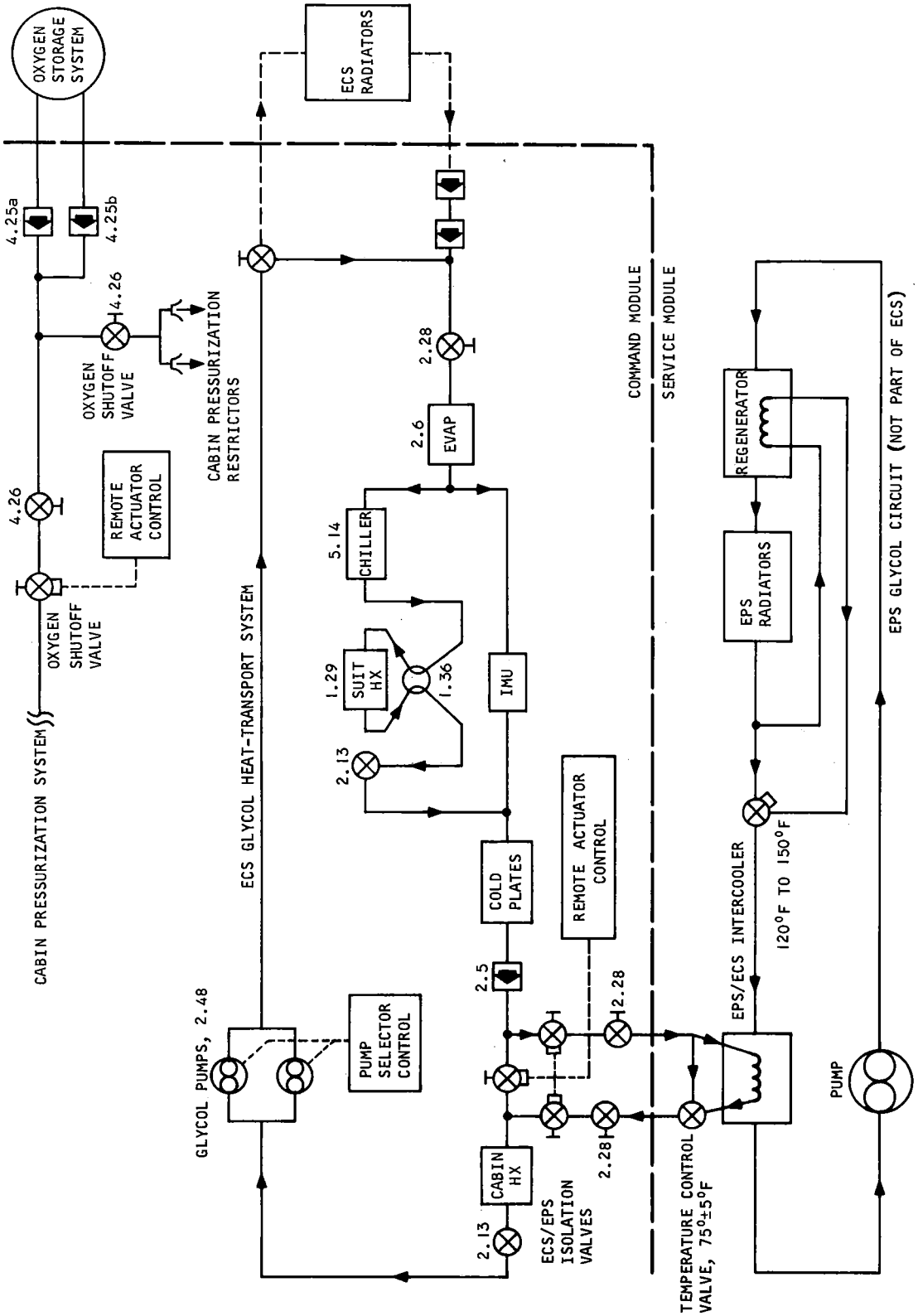

Figure 4-3. Apollo CSM Environmental Control System for ELOR

these employ labyrinth passages; others employ specially calibrated porous plates. Simple orifices are susceptible to plugging and thus are not usable. The flow to the cabin, in the range 0.1 to 0.25 lb of oxygen per day, is designed to equal the CM leakage at cabin pressures in the range 0.3 to 0.8 psia.

The rest of the Apollo oxygen supply system is turned off by means of a latching solenoid valve. No power is required for this valve during the 90 days of manned operation. At the end of this time, remote activation of the valve turns on the normal 5-psia supply system to repressurize the cabin.

Glycol flow, at a temperature of approximately 75 F, provides thermal conditioning of water-containing components that might be damaged by freezing. Included among such items are the evaporator (Item 2.6), the suit-circuit heat exchanger (Item 1.29), and the water chiller (Item 5.14). The secondary evaporator (Item 2.7), whose glycol circuit is normally off, is kept above freezing by its proximity in the environmental control unit (ECU) package to the many glycol-containing components of the primary circuit.

It is proposed that the water-valve panel in the ECU and the externally stored water tanks be thermally conditioned by parasitic EPS heat and insulation. The potable water supply assembly can be kept from freezing by its own heater or by parasitic heat from the electrical power source.

All ECS controls, except the pump selector control, are off and control valves manually positioned. Water boiler back-pressure valves are closed; the cabin heat exchanger valves are set to allow warm glycol to flow in the exchanger; and cabin fans are turned off. The suit circuit is isolated by closure of the suit hose connectors. The suit-circuit demand regulator is turned off, and the cyclic accumulators are placed in a standby mode. Both lithium hydroxide charges are removed from the CO_2 absorber canister (Item 1.15) and stored to prevent dehydration into LiO.

The water subsystem in the CM is turned off during the unmanned lunar orbit. Potentially, only one of the functions of this subsystem could be utilized during this time. This function would be to accept by-product water from the fuel cells and to either store it or vent it to space. Because of the relatively low reliability of the latter function, however, alternate arrangements for water disposal are suggested. Water dumping now involves flowing water through many feet of tubing, from the SM to the CM water subsystem, to the overboard dump nozzle and, thus, poses considerable risk of freezing. Since water storage (for crew drinking or for ECS heat-rejection use) is not required during this mission stage, water dumping to space could be accomplished more reliably directly from the EPS in the SM. Here, ample waste heat is available to ensure against freezing.

The ECS SM radiators are bypassed by use of the diverter valve (Item 2.36) in the CM. The heat rejection load of the ECS is so small that, without major modifications, the radiators would stagnate and either lower the total flow in the glycol circuit or stop it entirely. The effect of such low loads (1500 Btu/hr or less) on the radiator system is described in Reference 4.6. Because of these effects, the radiator circuit is turned off. Radiator temperatures may become very low; but with the thermal control afforded by rolling the spacecraft in the sun's rays, actual freezing of the panels is not expected. Isolation of the radiators also precludes the loss of fluid from the CM glycol circuit in the event of meteoroid puncture of radiator tubes on the vehicle exterior.

Systems Analysis

Basic Considerations. One of the most important considerations in this study was that of minimum change of existing Apollo Block II systems. Since this criterion was accompanied by considerably relaxed performance specifications for the 90-day unmanned lunar orbit, very few changes were necessary in the ECS.

In the area of thermal control, however, some uncertainty exists regarding the requirements for the ECS, since detailed information is lacking on the environmental load on the cabin interior. The generation of such loads requires complex and time-consuming transient computations of (1) the radiant interchange of the vehicle and its environment and (2) the transient heat conduction in the vehicle structure. Each of these computations must be carried out over the entire lunar orbit stage of the mission. Such computations were not a part of this study.

Another critical design consideration is the relatively high reliability goal, 0.999, for the ECS for the 90-day unmanned lunar orbit. Most of the redundancies present in the Apollo ECS are set up for manual switching. For example, six regulators in the oxygen system all have manual provisions for turning off a regulator if a valve fails open. Obviously, such provisions are meaningless for unmanned operation. Because the basic failure rates for many components, including the regulators, are approximately 3 to 10 failures per 10^6 hr, which far exceeds the allowable 0.46 failures per 10^6 hr, use of many components during the semiactive operational stage was ruled out. To provide redundancy and automatic (or remote) switching capability would have introduced considerable complexity into the systems. A good deal of effort was made to establish a separable and reliable system-operating configuration.

0.5-PSIA Pressurization. A review of the capability of the Apollo ECS oxygen supply subsystem indicated that, because of reliability considerations for the unmanned 90-day lunar orbit, the current cabin pressurization components could not, and need not, be used without substantial modification. Also, since the present 5.0-psia cabin pressure regulator could not be modified for use at 0.5 psia, a new valve would have to be designed. These situations prompted a critical evaluation of the 0.5 psia cabin pressurization requirement. Current data indicate that pressure levels of 0.1 psia are sufficient. For example, the Gemini B capsule is designed to be pressurized from the manned orbiting laboratory at 0.1 psia for 30 days. The ELOR specification of 0.5 psia was considered to be a target value with a lower limit of approximately 0.1 psia. Below the burst pressure of the vehicle, there is no expressed upper limit of cabin pressure. However, any such upper limit would result from requirements for the conservation of stored cryogenic oxygen. Presumably, enough oxygen would be carried to maintain the cabin at 0.5 psia for 90 days, based upon expected CM leakage rates at this pressure. Higher cabin pressures would result in greater leakage and thus require a larger quantity of stored oxygen.

It is expected that, by 1975, when extended missions are to be undertaken, CM leakage rates will be well known and fairly low. It has been assumed, therefore, that cabin pressurization can be maintained within reasonable limits by a constant flow rate of oxygen into the CM interior. This flow rate is normally set equal to leakage rates for between 0.5 to 0.7 psia cabin pressure. The flow is to be limited so that, even with a punctured CM, only the allocated quantity of cryogenic oxygen is used. For leakage rates of twice that expected, the cabin pressure would be maintained at approximately 0.25 psia. For lower-than-expected leakage, the cabin pressure will simply be higher than 0.5, with no increase in the consumption rate. For extremely low leakage values (which are very unlikely), the structural integrity of the cabin would be maintained by the normal function of the cabin pressure-relief valve (Item 3.1).

The method chosen to provide the constant oxygen pressurization flow is by means of two constant-area restrictors. Each restrictor is sized to give a flow of approximately 0.01 lb per hr, the total flow being equivalent to the estimated leakage rate of 0.48 lb per day. Complete plugging of one restrictor still provides pressurization at 0.25 psia. The restrictor can be of two types, both commercially available. One type uses calibrated porous metal plates; the other uses labyrinth flow paths. Both types are reasonably tolerant to blockage by some particulate matter in the oxygen and considerably more so than orifice devices.

In normal ECS operation, the restrictors are turned off by means of a manual valve (Item 4.26). In lunar orbit, this valve is open, and the rest of the oxygen supply system is closed off by means of a latching solenoid valve. A latching type of valve has been chosen to maintain reliable operation of the valve for the 90-day period.

Thermal Control. Study NAS8-21006 indicated that the electrical power system parasitic load could be used as a heat source for the CM ECS heat-transport loop. The method chosen to be utilized was to physically allow hot glycol from the EPS to flow into the ECS, with suitable temperature control valves to limit ECS glycol temperatures. The concept was studied in detail, and then finally abandoned in favor of the concept using an intercooler. The main difficulty with the interconnection of the circuits is that of maintaining proper flow rates in both loops. The ECS flow is nominally 200 lb/hr, while the EPS flow is less than 110 lb/hr. Since both the ECS and EPS pumps are variable-displacement types (centrifugal and vane types, respectively), interconnection of the circuits would require an extensive development program to ensure proper operation of both circuits while interconnected. Such a program would involve the proper matching of pressure levels, as well as pressure drops; these parameters would be found to vary with the position of the thermal control valves.

The thermal connection of the circuits by use of an intercooler is eminently simple and straightforward. Thermal control; that is, selective heating of the ECS glycol, is easily attained with a reliable, self-positioning, control valve. Each circuit may be qualified independently of the other circuit without considering the complicated problem of fluid interchange. Reliability of the fuel-cell glycol loop would be maintained, since a leak in the ECS circuit could not affect the high-priority EPS. The only disadvantage is the weight of the intercooler exchanger. The weight of the unit, designed for low-pressure drops in each circuit, is estimated to be about 5 lb.

The isolation valves are required to separate and couple the two circuits for the different operating modes. These are in the interconnecting lines and are of the latching solenoid type. This type of valve was chosen to meet the reliability requirement on the system. Normally, these valves would be required to operate through only one cycle in the mission. Since no electrical current is required during the 90-day period, a very low failure rate for these valves is expected. Should the temperature-control valve fail in the exchanger full-flow position and permit intercooler-outlet temperatures above 80 F, the remote switching capability of these valves can be used to isolate the two circuits. Periodic interconnection and disconnection could be used to maintain CM glycol temperature control in the event of such a failure.

For the earth atmosphere entry portion of the mission, when the SM is detached from the CM, backup for the solenoid valves is provided by manual valves (Item 2.28). For unmanned lunar orbit, these valves are normally open; for the manned portion of the orbit, the valves are closed.

During the quiescent mode when the radiant heat loss from the vehicle skin exceeds the sum of the radiant heat absorption from the environment and the heat being generated in the CM itself (crew metabolic loads, compressor loads, CO_2 absorption loads, and cabin fan loads are all absent; and electronic loads are greatly reduced), it is clearly mandatory that some form of heating be provided. The major reason for heating is to prevent freezing in, and thus possible damage of, components containing water. The flow of glycol in the temperature range of 55 to 75 F through such components provides sufficient heat to prevent freezing and maintain the desired cabin temperature.

It is expected that cabin temperature will be no less than +40 °F requirement throughout the mission. The actual heat transfer to the cabin is accomplished passively by conduction through the extensive cold-plate structure. Although warm glycol will be circulating through the cabin heat exchanger, no convective heat transfer is required from the unit, and the fans are turned off.

Active heat-rejection devices of the CSM ECS are not needed for the low loads expected; therefore, both boilers and the ECS radiators may be turned off. Glycol flows through the boilers to prevent freezing in them in the event of sustained low cabin temperatures; but the water feed to the units and their control systems are turned off. The entire ECS CM radiator system is bypassed, leaving stagnant glycol in this portion of the system. Actual freezing in the radiators of the CM lines is not expected, even with low temperatures. Continual barbecuing of the vehicle will limit the low temperatures to above the freezing point of the 62.5 percent glycol mixture.

If detailed thermal analyses should show potential freezing of stagnant lines in the CSM, electric blankets may be used to thaw the lines when the system is to be reactivated. Freezing in the radiator panels would not preclude their later use, since selective orientation of the vehicle relative to the sun could be used to thaw the panels. Damaging effects, if any, of freezing the glycol fluid within components and lines is, of course, an overriding consideration.

Cooling of those electronic components in operation in the CM is accomplished by the flow of glycol at 55 to 75 F.

The reliability of the glycol loop is limited primarily by the life of the glycol pumps. Life tests on the pumps indicate useful operating times of 6,000 hr, which exceeds the mission duration by nearly a factor of three. In the primary circuit, a backup glycol pump, which is presently activated manually, is available. For ELOR, an automatic pump-selector control is provided. For even greater assurance of continued ECS functioning, should both pumps fail, or a single leakage failure in the primary glycol circuit occur, the control can activate the secondary CSM glycol loop. The use of this loop requires an additional set of glycol passages in the intercooler exchanger. Cabin temperature control can be obtained passively without atmosphere circulation being required.

Instrumentation and Monitoring. The following instrumentation additions to the current Apollo Block II ECS are recommended for extended lunar orbital missions:

1. A second cabin-pressure transducer is required to monitor the 0.5 psia cabin pressure. The current 0-to-17 psia cabin pressure transducer has a tolerance of ±0.425 psia, which is not accurate enough for low-pressure monitoring. The new pressure transducer should have a sensing range of 0 to 2 psia and a tolerance of about ±0.06 psia. These are commercially available.

2. A temperature sensor is required to monitor the control function of the temperature-control bypass valve on the ECS/EPS intercooler. Should this valve fail closed, it is possible that the ECS glycol loop could be subjected to temperatures in the range of 100 to 120 F. The direct monitoring of the control valve outlet temperature will detect such a failure well before its effect would be evident from the present ECS instrumentation. The early detection of such failure, coupled with the fact that the CM glycol loop has appreciable thermal capacitance, would probably allow the crew sufficient time to remotely switch to the secondary glycol loop and then, depending on the abort criteria, permit crew return to the CM before damage occurs to critical electronics.

3. A flow indicator is required for the automatic pump selector control. This device would only have ON/OFF reading to signal pump failure. Actual flow rate indications are available from two other ECS indicators.

The normal Apollo ECS instrumentation readings, plus the above three measurements, would normally be telemetered to earth. Selected telemetry and alarms to the lunar surface would include the three measurement, pump pressures, glycol flow rate, cabin temperature, and electronic cold-plate temperatures. Alarms indicating CSM ECS problems would show the following conditions:

1. Failure of a glycol pump as evidenced by (1) the flow indicator, (2) a low or zero pump pressure differential pressure, or (3) a low reading from the cold-plate glycol flow rate transducer.

2. Loss of glycol determined by a bottomed glycol accumulator quantity transducer.

3. Excessive cabin leakage as indicated by the cabin pressure sensor.

4. Malfunction of the intercooler temperature limiting control noted by glycol temperatures over 80 F from the intercooler.

5. High (or low) electronic cold-plate temperatures.

6. High (or low) cabin temperatures.

Remote Control. Provisions from MSFN or the lunar surface should include the ability to select or deactivate any of the three glycol pumps; and the operation of the three ganged solenoids in either circuit that permit glycol flow into the ECS/EPS intercooler. The selection of the backup pump also is automatic whenever the primary pump flow falls to a certain level. Remote actuation of the pump selector control overrides the automatic function of the control.

The oxygen shutoff valve can be remotely controlled so that the cabin can be repressurized by the emergency inflow valve (Item 4.22) prior to crew rendezvous with the CSM.

ECS Safety and the 90-Day Requirement

Because parts of the ECS system operate throughout the 90-day quiescent phase as well as the manned phases of the mission, its functions contribute to both P_s and P_{90}. It is therefore necessary to evaluate each separately and then identify the interaction.

The manned phases involve the Apollo Block II system functions only; however, they are required to operate about 175 hours, 25 percent less than for the DRM. The result is that the system contribution to P_s should should approach $P_s = 0.9997$, actually exceeding the expected DRM value, because the crew leaves the CSM soon after arrival in lunar orbit. No changes or modifications are required for those functions not operating during the quiescent phase. This assumption is based on the premise that the shutdown and storage procedure presented in Appendix A is followed.

The quiescent phase involves use of only a small portion of the Block II system. The involved components are presented in the reliability logic of Figure 4-4. Failure of this function merely affects the abort requirement and P_{90}. The system functions as illustrated have been configured to achieve a P_{90} of 0.9995. The analysis takes into account all of the potential failure modes of any significance.

The failure rate for each latching solenoid valve is taken to be 0.05×10^{-6} failures per hour. The reason for such a low value is that these valves must undergo only a few operational cycles in the 90 days—and potentially only one cycle. If the failure rate were expressed in MCBF (mean cycles between failures), instead of MTBF, the value would be about 20×10^{-6} failures per cycle. The reliability for five cycles of operation would be the same (0.99989) as that calculated from the hourly failure rate.

The pump selector control is activated automatically whenever the flow indicator ceases to detect the proper glycol-circuit flow rate. The control then selects the backup pump in the primary circuit; if this pump has already been in operation, the control selects the pump in the secondary circuit. The failure rate for the automatic selector (10×10^{-6}) includes the flow indicator instrument. A backup, remotely controlled selector also is provided. A spare pump motor is recommended for use after crew return in the event that two or more of the others failed during the dormant phase. The backup selector can override the automatic selector. Information that would be used to define the need to use the backup selector comes from the telemetry of pump differential pressure, or cold-plate outlet glycol flow rate, or both. Since the backup selector does not depend on just one sensor, its failure rate (2×10^{-6}) is assumed to be lower than that of the automatic selector. Reliability of the remote control communications link, however, has not been considered here.

In each glycol circuit, the critical failure-rate component is the intercooler temperature control valve. The predominant failure of this type of self-positioning valve is to jam or stick. As discussed earlier, should this valve jam with full flow to the intercooler, the ECS glycol circuit would potentially experience 100 to 120 F temperatures, which heat would be damaging to electronic components. With such a failure, the ECS/EPS isolation valves would have to be remotely activated to isolate the circuits; then the secondary circuit would have to be used. This operation is not fully accounted for in Figure 4-1. A jamming of the valve in an intermediate position might, however, require no remedial action.

Maintenance or repair is not considered a requirement for the CM-ECS since it is impractical during the quiescent mode and not indicated to be a requirement. After return to the CM, the crew could replace a faulty

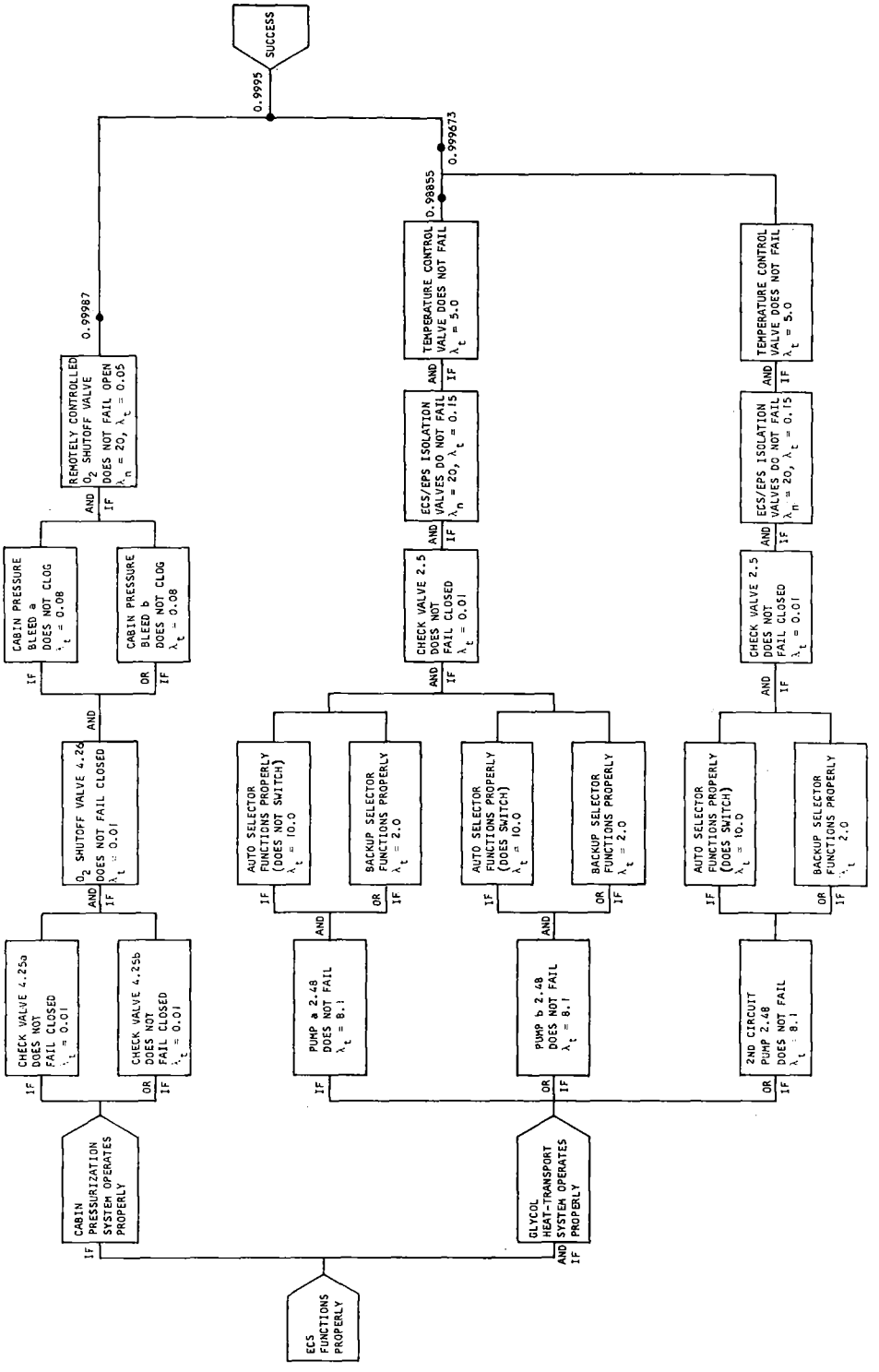

Figure 4-4. Reliability Diagram for Apollo ECS in Semiactive Status for Ninety-Day Unmanned ELOR

pump motor if required. This task seems to be the only potential M&R action for the whole system, a spare would add only 1.5 pounds.

Recommendations and Conclusions

The system as herein defined will satisfy the ELOR requirements and provide a P_{90} of 0.9995 and a P_s of 0.9997. The weight increase is limited to 22.6 pounds and the power consumption during the quiescent mode will be about 50 watts. No new technology is required, although 10 new items are required. They are either available or require a short procurement cycle.

Table 4-2 gives the development status of those components used in the ELOR ECS in addition to those in the Apollo ECS.

Table 4-2. Development Status of ECS Components Added to the LOR Configuration

Component	Number Required	Development Status
Oxygen shutoff valve, latching solenoid	1	New
Oxygen shutoff valve remote actuator	1	New
Oxygen shutoff valve, manual	1	Qualified Apollo, Item 4.26
Cabin pressurization restrictor	2	New, commercially available
Cabin pressure transducer, 0 to 2 psia	1	New
Suit-circuit-exchanger water tank	1	New
ECS/EPS intercooler heat exchanger	1	New
Temperature control valve, self-positioning (Vernatherm)	2	New
Temperature transducer	1	Qualified Apollo, Item 8.23
ECS/EPS isolation valve, latching solenoid	6	New
ECS/EPS isolation backup valve, manual	4	Qualified Apollo, Item 2.28
Isolation valve remote actuator	1	New
Pump selector control	1	New
Flow indicator	1	New

4.1.3 Guidance and Navigation

NOTE: Much of the information used herein has been provided by the A. C. Electronics Division of General Motors Corporation through Reference 4-7.

System Description

The guidance and navigation (G&N) system is employed to provide a means of determining the spacecraft position and velocity vector with respect to a given reference. Two basic operational modes of navigation are possible: local primary and earth primary via the communications link. Former studies indicate that earth primary is the optimum mode for all mission phases except in the immediate vicinity of the moon or during earth reentry.

The G&N system is expected to be the Apollo Block II system, which is composed of an optical navigation subsystem, a guidance computer, and an inertial measurement unit. These same functions are required for the Apollo mission; therefore, the associated components formed the basis of this analysis. The optical subsystem possesses the ability to measure the angle between a star and the moon center, or some landmark thereon, and the capability of measuring the apparent angle subtended by a planet (stadiametric). The guidance computer (CGC) is to have the capability of performing the necessary calculations to relate the optically measured data to the position and velocity of the spacecraft and, when required, to calculate the vehicle course corrections required. The inertial measurement unit (IMU) provides a reference coordinate system and monitors the accelerations applied to the vehicle.

The functional logic for the G&N velocity change functions are given in Figure 4-5. The functional logic for the earth-entry-mode system is given in Figure 4-6. It will be noted that from these examples the different modules impose somewhat different requirements. The earth entry module functional requirements are similar to those of the Apollo in all respects; and the Apollo system is expected to meet those needs or exceed them without change. The mission module system, which is to facilitate velocity corrections only and to function under different circumstances, is the system studied in depth herein; the recommended operational concept is justified in Section 2.1 of this report.

The capability of the Apollo G&N system, using present operational concepts to meet the above requirement has already been demonstrated for the Apollo mission, differences in mission profile are considered insignificant with respect to normal operation.

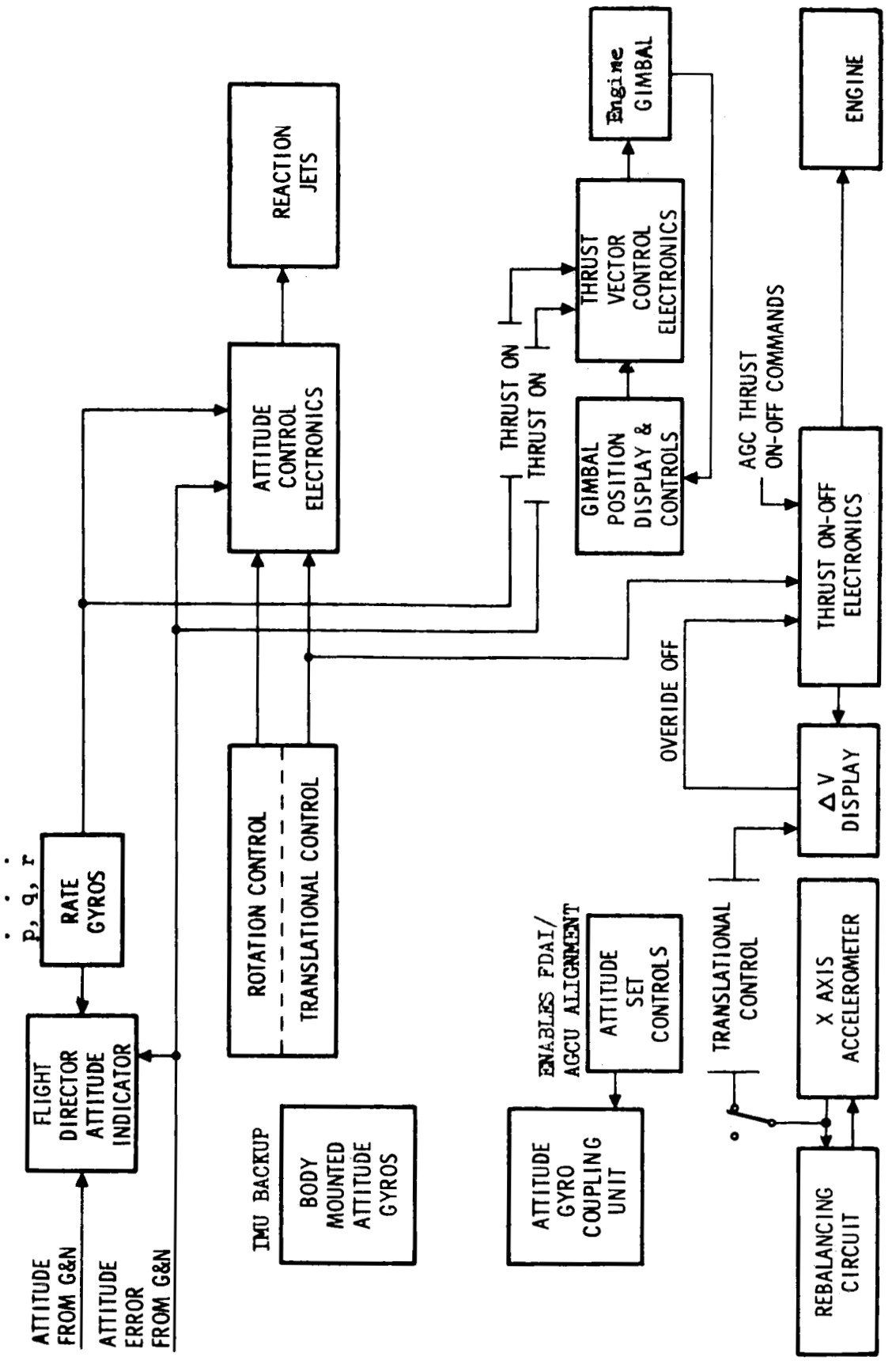

Figure 4-5. G&N ΔV Modes

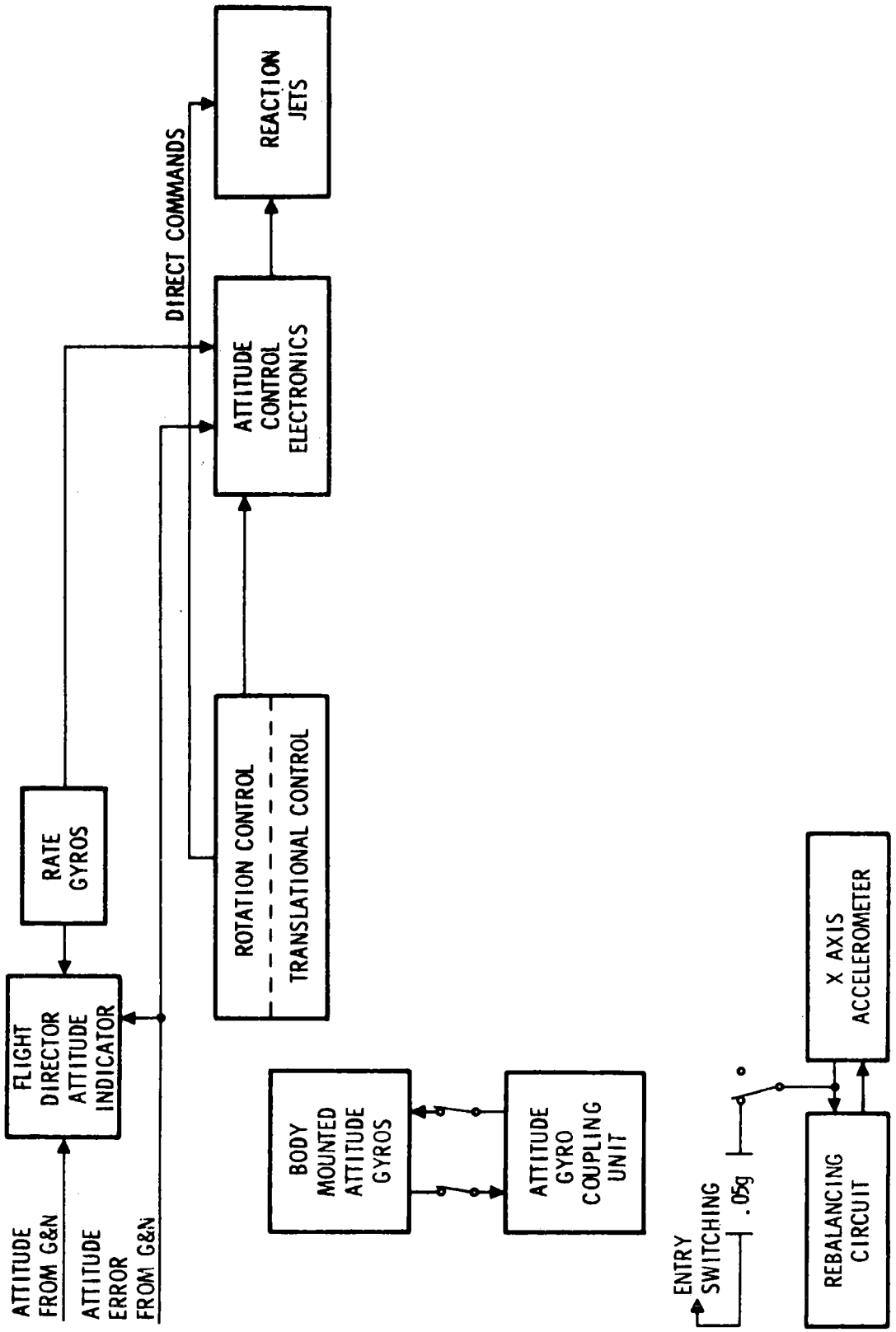

Figure 4-6. G&N Earth Entry Mode

Systems Analysis

Since the functional requirements for the ELOR mission were satisfied by the Apollo II system, the subsequent analysis centers around improving the contribution to safe return and resolving any life problems. The G&N system operates during the manned phases and only affects P_s. Variations in both operational concept and equipment affiliation were considered in an attempt to maximize P_s and life margin.

A P_s of about 0.999 (much higher than Apollo) was set. The system duty cycles will be about the same for the ELOR mission as for the present DRM; however, the system functions do not attain reliabilities of 0.999 for the DRM. It is therefore apparent that some means of reducing the equipment failure rates and/or return usage times must be found to improve safe return.

There exists considerable latitude in choosing a system configuration and operational concept depending on the acceptable reliability and the acceptable cost (additional equipment, changes in equipment and operational concept, reduced capability, etc.) in achieving it. Possibilities considered include—

1. Use of present Apollo equipment and operational concept.

2. Change of the operational concept to reduce equipment usage time.

3. Redesign or use of additional equipment to improve the failure rate.

4. Scavenging of LM equipment to improve the CM failure hazard for the return trip.

5. Combinations of the above.

Using the previously defined G&N system functional duty cycle as a basis, the detailed equipment operational and standby times were developed and are presented in Table 4-3, Parts I and II respectively.

Additional G&N functions include optical subsystem usage for alignment of the inertial reference and navigation during lunar orbit. CM computer operational time was added in the Prepare LM Phase (6.2) because an inertial reference was required and because the listed computer time was increased during the Departure Preparation Phase (6.19) to allow for navigation.

Under present Apollo operational concepts, the inertial subsystem (ISS) is always in at least the standby mode so heat is supplied to the inertial instruments. In the CM system, the standby mode also energizes the 3,200-cycle power supply for inertial instrument suspension. This power supply requires a timing reference from the computer meaning that the computer subsystem (CSS) must be in at least the standby mode also. Therefore, in the normal Apollo mission, the inertial instrument heaters and suspension and the computer timer are never turned off.

System operating and standby failure rates were determined from MIT IL Report E-1142 (Rev. 55) (Reference 4-8). These major subsystem and subassembly failure rates are shown in Table 4-4. It should be noted that not all display and monitoring equipment is included, even though many G&N system signals might be displayed there. Only the display and keyboards (DSKY's) and the display and control (D&C) group are considered G&N equipment. The CM DSKY's are normally redundant, accounting for the low failure rate. The CM D&C group is considered part of the optical subsystem since it is mainly used during optics functions, while the LM D&C group is mainly associated with inertial subsystem functions.

Table 4-3 (Part I). CM G&N System Functional Profile for Boost, Transit, and Entry

Mission Phase	CM G&N System Operational Functions
1.0 Prelaunch	Turn-on, warmup, checkout, vertical erection, optical azimuth alignment, and gyrocompassing.
2.0 Ascent	Monitor attitude and ΔV.
3.0 Earth orbit	Monitor attitude and one alignment update.
5.0 Translunar	Monitor injection attitude and ΔV; control attitude during transposition and docking; alignment, attitude control, and ΔV control for three mid-course corrections; and alignment update, attitude control, and ΔV control for lunar orbit insertion.
6.0 Lunar orbit	None
7.0 Transearth	Alignment, attitude control, and ΔV control for three midcourse corrections; and attitude control and alignment update just prior to entry.
8.0 Entry	Entry control.

Table 4-3 (Part II). CM G&N System Equipment Usage Times Based on ELOR Functional Requirements

CM Phase	Duration (Hours)	ISS Operational Equipment	ISS Standby Equipment	CSS Operational Equipment	CSS Standby Equipment	OSS
1.0 Prelaunch	100	4	4	4	4	0.1
2.0 Ascent	0.2	0.2	0.2	0.2	0.2	0
3.0 E.O.	1.5	1.5	1.5	1.5	1.5	0.1
5.0 Translunar	61.7	3.5	61.7	3.5	61.7	0.8
6.0 Lunar area	2208.8					
6.1 Adjust orbit	2.2	2.2	2.2	2.2	2.2	1.0
6.2 Prepare LM	3.5	3.5	3.5	3.5	3.5	0.5
6.4 Separate	0.2	0	0.2	0	0.2	0
6.6 CSM quiescent initiation	1.4	0	1.4	0	0.1	0
6.8 CSM unattended	2195.9	0	2195.9	0	0	0
6.17 CSM activate	1.0	1.0	1.0	0	1.0	0
6.18 Transfer	0.5	0.5	0.5	0	0.5	0
6.19 Departure preparation	4.0	4.0	4.0	2.5	4.0	1.5
6.21 Transearth injection	0.1	0.1	0.1	0.1	0.1	0
7.0 Transearth	88.2	3.5	88.2	3.5	88.2	0.8
8.0 Entry	0.3	0.3	0.3	0.3	0.3	0
9.0 Recovery	20.0	0	0	0	0	0
Totals	2480.7	24.3	2364.7	21.3	167.5	4.8

ISS = Inertial subsystem
CSS = Computer subsystem
OSS = Optical subsystem

The question of failure during dormancy was investigated, but the conclusions hold for any interval when the equipment is off or deenergized. Assuming no severe environmental stresses on the equipment during the dormant period, the only possible cause for equipment failure would be an aging process; i.e., a continuation of a chemical or physical reaction that had begun prior to dormancy. This effect implies a time-dependent failure rate as opposed to the constant rate applicable during the useful operating life of equipment. (See Section 2.5).

Considering comparable external environmental stresses for operational and dormant periods, the dormant failure rate becomes extremely low, and the number of system failures occurring during a 90-day quiescent period are considered insignificant.

Table 4-4. CM G&N System Failure Rates

CM Subsystem	Operating $\lambda \times 10^{-6}$	Standby $\lambda \times 10^{-6}$	Subassembly	Operating $\lambda \times 10^{-6}$	Standby $\lambda \times 10^{-6}$
Inertial (ISS)	394	16.5	IMU and PIPA Elec Assy	129	10.2
			Power Servo Assy (PSA)	110	6.3
			Coupling Data Unit (CDU)	155	-
Optical (OSS)	264.3	-	Optical Assy	94	-
			PSA	77	-
			CDU	91	-
			D&C Group	2.3	-
Computer (CSS)	237.3	60.5	CM guidance computer	235	60.5
			(CGC) DSKY	2.3	-

The G&N system function contribution to P_s for the mission can now be computed by combining the operational and standby reliabilities of the various equipment groups only. The first computations are based on normal operational concepts. The CM G&N system computer clock is assumed to be operating throughout the mission even though (according to Table 4-3) the timing reference is not continuously required for computations throughout the mission. The results appear in Table 4-5, where the contribution to mission P_s is only 0.82, which is considered too low.

The P_s falls short of the goal mainly because of standby equipment failures. The first and most obvious remedy would be to change the operational concept such that the computer need not be on when no computations or timing reference are functionally required (when only IMU heater power is needed). As presently mechanized, the suspension power would still be present with the IMU heater power, but its frequency would not be accurate. The functionally required CSS standby equipment time, exclusive of suspension time when suspension is not really needed, is 167.5 hours. Of this time, the CSS standby equipment is on alone for 146.2 hours, and its P_s becomes 0.99. For the overall system, $P_s = 0.94$.

The capability of updating computer time exists, but has not been used in the Apollo missions since the computer is never turned off. Some timing error will result from transmission from the earth to the moon, but

Table 4-5. CM G&N ELOR Mission Probability of Success, Normal Apollo Operational Concepts

CM Subsystem	$\lambda \times 10^{-6}$	T (Hours)	λT	P_s
ISS - Operating	394	24.3	0.009574	0.99
- Standby	16.5	2340.4	0.038617	0.96
CSS - Operating	237.3	21.3	0.005054	0.99
- Standby	60.5	2343.4	0.141776	0.88
CSS	264.3	4.8	0.001269	0.999
Total			0.196290	0.821

this could be calibrated for the nominal lunar distance. Another consideration is that an additional burden is placed on the up-data link because absolute time is no longer available on board. Vehicle inertial position and velocity could still be determined on board, but relative position and velocity would not be known quickly and accurately except through communications via MSFN.

Once the CSS standby time has been reduced, the ISS standby equipment, consisting of temperature control and suspension, becomes the reliability-limiting item. Since there are long standby periods when only temperature control is needed, it might be desirable to change the power switching design such that the suspension equipment is energized separately. The ISS standby failure rate is then reduced to 1.6×10^{-6} failures per hour, and $P_s = 0.994$. Incorporating this change along with the CSS standby change discussed, the overall CM G&N system exhibits $P_s = 0.97$ as shown in Table 4-6.

If it were possible to eliminate all the normal standby functions of IMU temperature control, computer timing, and inertial instrument suspension, the resulting overall G&N system characteristics would be $P_s = 0.98$.

The ramifications of removing IMU temperature control are discussed in Appendix B. Investigations have shown that inertial instrument temperature can be lowered below present specification limits during nonoperational periods without instrument degradation.

Table 4-6. CM G&N ELOR Mission Probability of Success, Modified Standby Operation

CM Subsystem	Failure Rate λx 10	T (Hours)	λT	P_s
ISS - Operating	394.0	24.3	0.009574	0.99
- Standby	1.6	2340.4	0.003585	0.994
CSS - Operating	237.3	21.3	0.005054	0.995
- Standby	60.5	146.2	0.008845	0.99
CSS	264.3	4.8	0.001269	0.999
Total			0.028327	0.97

An alternate approach to increase system reliability is to improve the operational failure rate by some means. This increase might be accomplished by redesign, redundancy, spares and maintenance, or a combination of these approaches. Extensive redesign would be required to appreciably reduce the overall system operational failure rate. The recommended alternative is taking along additional equipment either redundantly or as spares. As indicated in Table 4-7, by sparing the first four items, the overall system P_s is 0.99. Since the computer reliability was still the limiting item, two spare computers and one each of the ISS subassemblies would increase the overall system P_s to over 0.993. Planned use of LM system components after rendezvous will accomplish much the same results.

Reduction of usage time by eliminating all standby functions and the application of four spares yields an overall system P_s of 0.999, which is well in excess of Apollo II estimates.

The possibility of scavenging LM equipment for the CM return trip is enhanced by the fact that the CM components most likely to fail are available when required in the LM and usable in the CM with only slight modifications. The reliability breakdown, considering time before and after a spare is available, is as shown in Table 4-8. It can be seen that the P_s gain is minimal and may not be worth the problems of removing and transferring LM equipment to the CM if they are not needed prior to CM/LM separation.

Recommendations and Consluisons

The Apollo II concept in the operational concept identified in the foregoing will satisfy the ELOR mission without any significant changes in design

Table 4-7. CM G&N System P_s as a Function of Various Sparing Elements

CM Subassembly	$\lambda \times 10^{-6}$	T (Hours)	λT	P_s	No. of Spares	Equivalent λT	Equivalent P_s
IMU and PIPA Elec Assy							
- Operating	129.0	24.3	0.003135	0.9969			
- Standby	10.2	2340.4	0.023872	0.9764			
			0.027007	0.9733	1	0.000414	0.9996
PSA (ISS) - Operating	110.0	24.3	0.002673	0.9973			
- Standby	6.3	2340.4	0.014745	0.9854			
			0.017418	0.9827	1	0.000183	0.9998
CDU (ISS)	155.0	24.3	0.003767	0.9962	1	0.000007	0.99999
CGC - Operating	235.0	21.3	0.005006	0.9950			
- Standby	60.5	2343.4	0.141776	0.8680			
			0.146782	0.8635	1	0.009800	0.99
DSKY	2.3	21.3	0.000049	0.99995	0	0.000049	0.99995
Optical Assy	94.0	4.8	0.000451	0.9995	0	0.000451	0.9995
PSA (OSS)	77.0	4.8	0.000370	0.9996	0	0.000370	0.9996
CDU (OSS)	91.0	4.8	0.000437	0.9996	0	0.000437	0.9996
D&C	2.3	4.8	0.000011	0.99999	0	0.000011	0.99999
Total			0.196292	0.8215	4	0.011722	0.99

Table 4-8. CM G&N System Subassembly Reliability Breakdown, Operational Only, LM Components as Spares for Return Trip

CM Subassembly	$\lambda \times 10^{-6}$	T	No. of Spares	λT	P_s
IMU and PIPA Elec	129.0	16.4		0.002116	0.998
		7.9	1	0.000002	0.99999
PSA (ISS)	110.0	16.4		0.001804	0.998
		7.9	1	0.000001	0.99999
CDU (ISS)	155.0	16.4		0.002542	0.998
		7.9	1	0.000002	0.99999
CGC	235.0	14.9		0.003502	0.997
		6.4	1	0.000003	0.99999
DSKY	2.3	21.3	0	0.000049	0.99995
Optical Assy	94.0	4.8	0	0.000451	0.9995
PSA (OSS)	77.0	4.8	0	0.000370	0.9996
CDU (OSS)	91.0	4.8	0	0.000437	0.9996
D&C	2.3	4.8	0	0.000011	0.99999
Total			4	0.011290	0.99

or new equipment. Table 4-9 is a summary of the various implementation concepts possible. Use of LM components and/or provision of up to four spares will provide a contribution to P_s of about 0.999.

Changes in the Apollo operational concept to reduce equipment usage times appear to offer the greatest promise for reliability performance improvement without the penalty of additional equipment or extensive redesign. An additional burden may be placed on other systems; i.e., shutdown of IMU heater power could impose restrictions on the environmental control system, and shutdown of computer timing would require ground updates of absolute time. These areas require further thorough investigation before they can be implemented.

Special consideration was given to investigations of the effects of turning off the computer timing reference, inertial instrument cooldown, and equipment failure during dormant periods.

The only development ramifications involve the IMU heater. This study has assumed what available data seems to indicate, that they are not required for a quiescent mode, provided adequate warmup is provided prior to usage. This aspect must be demonstrated by test.

Table 4-9. Summary of CM G&N System Reliability, Improvement Steps

Contribution to P_s	Configuration and Operational Concept	Weight Delta (pounds)
0.82	Apollo Block II G&N system and operational concepts.	0
0.94	Reduced computer standby time.	0
0.94	One spare computer.	+42
0.97	Reduced computer standby and inertial instrument suspension times.	0
0.98*	All equipment off during standby periods.	0
0.99*	One spare computer and one spare of each ISS subassembly.	+142.8
0.99*	Spares from LM for return trip and all equipment off in standby.	
0.993	Two spare computers and one spare of each ISS subassembly.	+185.6
0.999	One spare computer, one spare of each ISS subassembly, and all equipment off during standby.	+142.8

*Approximately that projected for Apollo II (See Reference 4.6).

4.1.4 Stability Control System (CSM-SCS)

NOTE: Much of the information used herein was provided by the Honeywell Corporation through Reference 4-9. (The system proposed herein involves the addition of a new function, rather than the Block II SCS, for the quiescent state.)

System Functions and Description

The SCS system for the ELOR mission must perform two fairly diverse functions:

1. The stability control of the CSM-LM on the way to the moon and the CSM during the return trip, in the same manner as specified for Apollo II (Apollo Block II SCS unchanged).

2. Provision of a minimum-control mode for the CSM while unattended in the lunar orbit quiescent mode (new function).

This study is specifically addressed to the latter requirement since, for the greater part, the two functions can be separable in terms of component requirements. The ability to perform the to-and-from aspects of the mission remain unchanged by the new requirement.

The ELOR control phase begins with the CSM-LM vehicle established in lunar orbit. The combined vehicle is astronaut-maneuvered to a position in which its longitudinal axis is perpendicular to the solar line of sight. At this point, vehicle attitude control is established using Block II SCS minimum deadband attitude hold. All SCS devices are turned off except the Gyro Assembly No. 1 (GA No. 1), Gyro Assembly No. 2 (GA No. 2), electronic control assembly (ECA), and reaction jet/engine control (RJ/EC) device, which continue to maintain vehicle attitude. Before moving from the command module to the LM, the astronauts arm the remote control function to be used in switching from the SCS to the ELOR stabilization system (ESS) control of the CSM.

After LM separation from the CSM, the quiescent mode is commanded; and a slow roll is initiated through the ESS. When the desired rate is reached, pitch and yaw attitude control are established via the ESS; and all SCS devices except the reaction jet/engine control are turned off. During the ensuing 90-day lunar exploration period, the unattended CSM orbits the moon under ESS control. The vehicle's longitudinal axis is maintained perpendicular to the solar line-of-sight within ±20 degrees in pitch and yaw while the roll rate is maintained between 2 and 3 degrees per second. All SCS devices except the RJ/EC remain powered down during the quiescent mode, but can be reactivated by remote command if required.

During the rendezvous phase, the manned LM returns to rendezvous with the unmanned CSM. Prior to docking, the ESS is remotely disabled and CSM control reestablished using SCS minimum deadband attitude hold. The SCS functions as in Apollo II for the remainder of the mission.

A functional block diagram of the basic ESS is shown in Figure 4-7. The ESS consists of the present SCS RJ/EC device, a gyro electronics assembly (GEA), and two sun-sensor assemblies.

The sun sensors are located on the SM periphery and provide pitch and yaw attitude information with respect to impinging solar radiation. An electrically caged gyro in the GEA provides a source of roll-rate information to complete the list of ESS references.

Signals from the sun sensors and gyro are processed by the GEA, which provides switching outputs to the RJ/EC. The RJ/EC, in turn, fires the required service module reaction jets.

The nominal roll rate is established by summing a constant d-c voltage with the rate gyro's demodulated output. Each channel's amplifier gain is adjusted so that identical deadband and minimum impulse circuits can be used in all channels. Only two reaction jets (one plus and one minus) will be enabled in each axis to permit limit-cycling at low vehicle rates with attendant minimization of fuel consumption. The functional blocks are described in detail in the following:

Each sun sensor contains two Ball Brothers Research Corporation CE-3 photoelectrical angular detectors as shown in Figure 4-8. The sun sensors will be mounted on the SM periphery and located so that the yaw sensor detects coning in the yaw axis and the pitch sensor does the same in pitch.

Output current of the CE-3 detector approximates a sinusoid as shown in Figure 4-8, with a maximum output when solar radiation is normal to the detector face. In combining two detectors as shown in Figure 4-8, the output currents will be equal when solar radiation is normal to the overall sensor or at a nominal 45 degrees to each detector. Any deviation from this position will result in unequal detector outputs and a usable error signal. As the vehicle rotates, the individual detector outputs vary from zero to a maximum and back to zero. This variation creates no problem, however; since both outputs vary in unison.

The rate BMAG (body-mounted attitude gyro) is a heaterless version of the GG248 BMAG used in the Apollo SCS, caged through circuits similar to those used in the Apollo SCS.

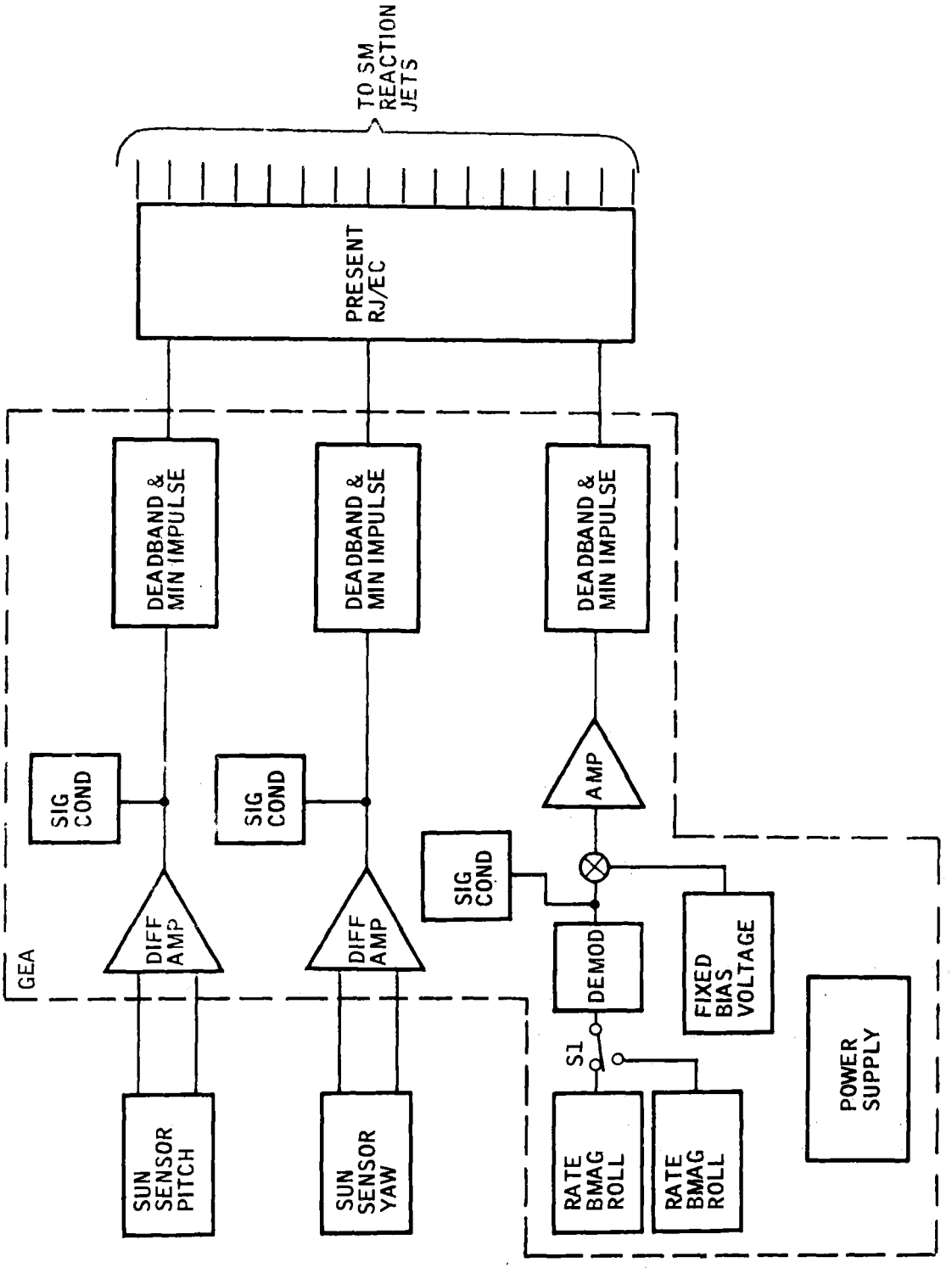

Figure 4-7. Proposed ELOR Stabilization System (ESS), Dormant Mode Only

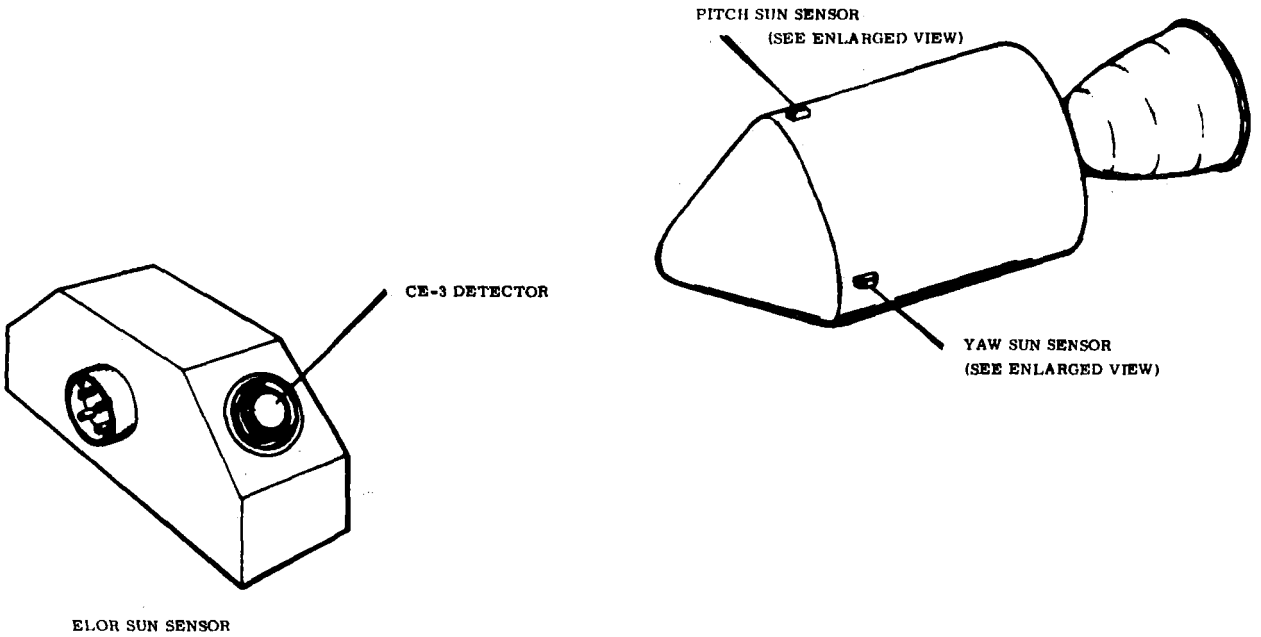

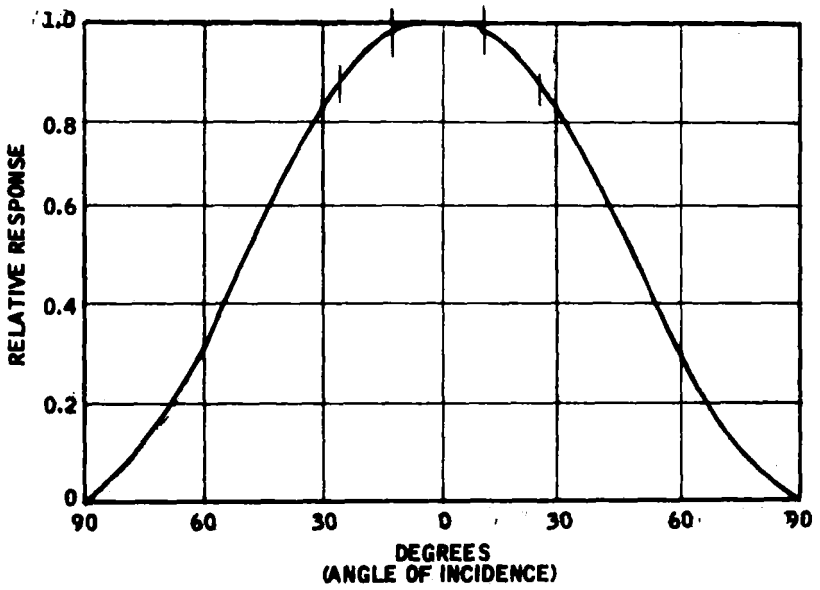

Figure 4-8. Proposed ELOR Sun Sensor, Location, and Characteristics

Each amplifier is based on a Fairchild μ709 integrated circuit. Five resistors and two capacitors will be used with each μ709.

The demodulator is a full-wave circuit similar to those used in the Apollo SCS. It will consist of six resistors, two transistors and one capacitor.

The deadband and minimum-impulse circuits are similar to those used in the SCS electronic control assembly (ECA).

Required power supply input is 115-v, a-c, three-phase, 400-cps electrical power. Power supply outputs are 26-v, a-c, three-phase, BMAG, spin-motor-excitation; 36-v, a-c, Phase-A, BMAG, signal-generator-excitation; 10-v, a-c, Phase-A, demodulator-reference; and ±15-v, d-c control-electronics power and ±15-v, d-c signal-conditioning power.

The RJ/EC is modified to accept three additional switching inputs. Six resistors and three transistors are added to switch the added inputs.

Each signal conditioner is of the type used in the Apollo SCS, but repackaging may be required.

Systems Analysis

SCS for the manned phases of ELOR will contribute to P_s. Because that time is reduced to about 175 hours (25 percent below the Apollo DRM) the SCS contribution to P_s should be about 0.997.

The quiescent-phase function contributes to the mission stay-time and the resulting P_{90}, failure results in abort. This is a separate function.

Analysis of the proposed new basic ELOR control function (ESS) of Figure 4-9 indicates that the system contribution to P_{90} would approach 0.91, which is too low. It is also evidenced that the BMAG and its electronics is the weakest link. Providing for a remotely selected spare BMAG will improve P_{90} to better than 0.97. Further improvement is required and may be achieved through redundant deadband minimum-impulse circuitry and a redundant power supply function. These additions increase the function reliability such that the ESS contribution to P_{90} will reach about 0.993. The logic for this function is presented in Figure 4-10. The results of these tradeoff considerations are reflected in Table 4-10.

These estimates are made with a parts-count approach to reliability analysis and are based upon Apollo high-reliability piece-part failure rates and a knowledge of the quantity of each utilized in each specific subassembly.

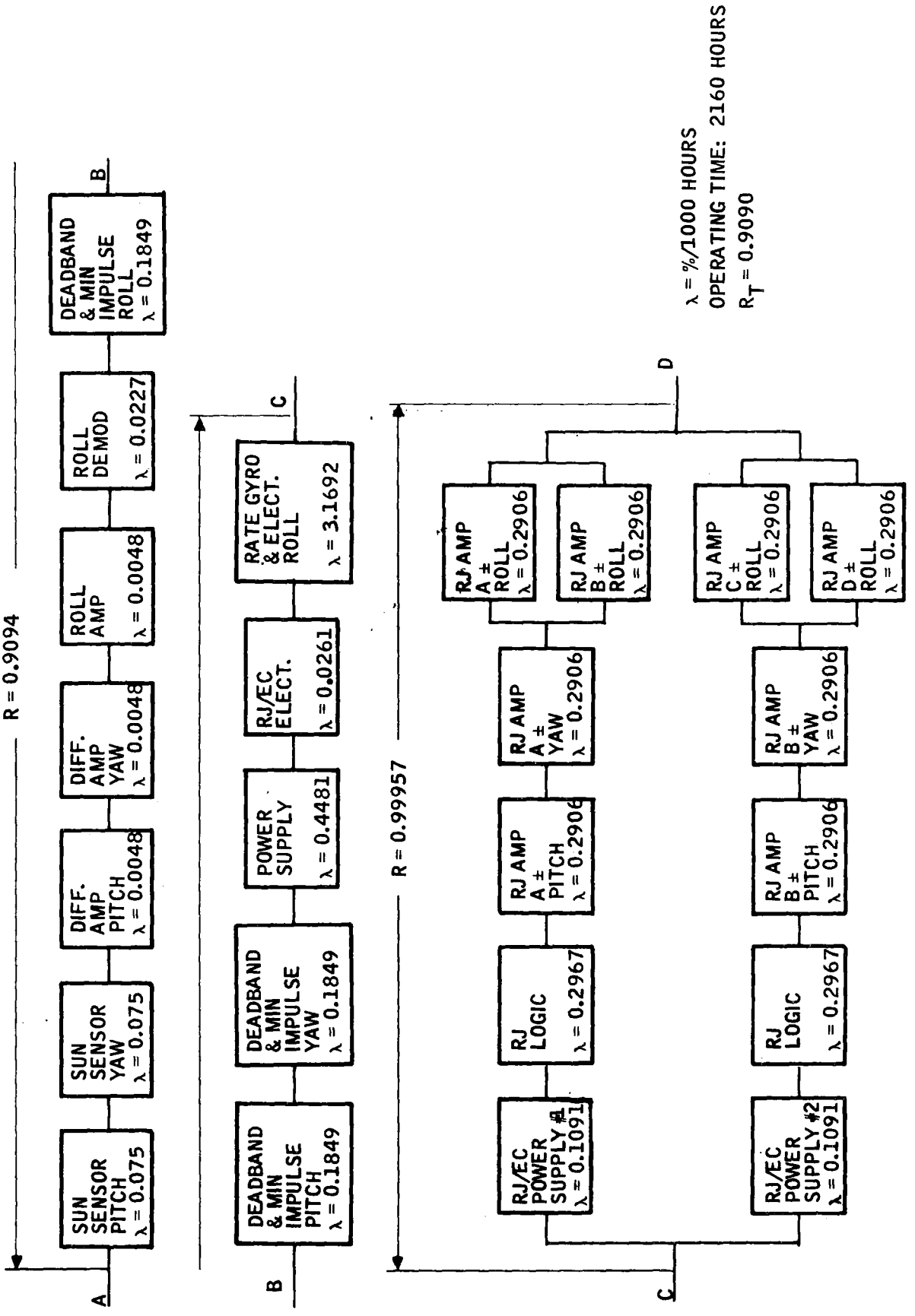

Figure 4-9. ELOR Quiescent-Phase Stability Control Reliability Logic

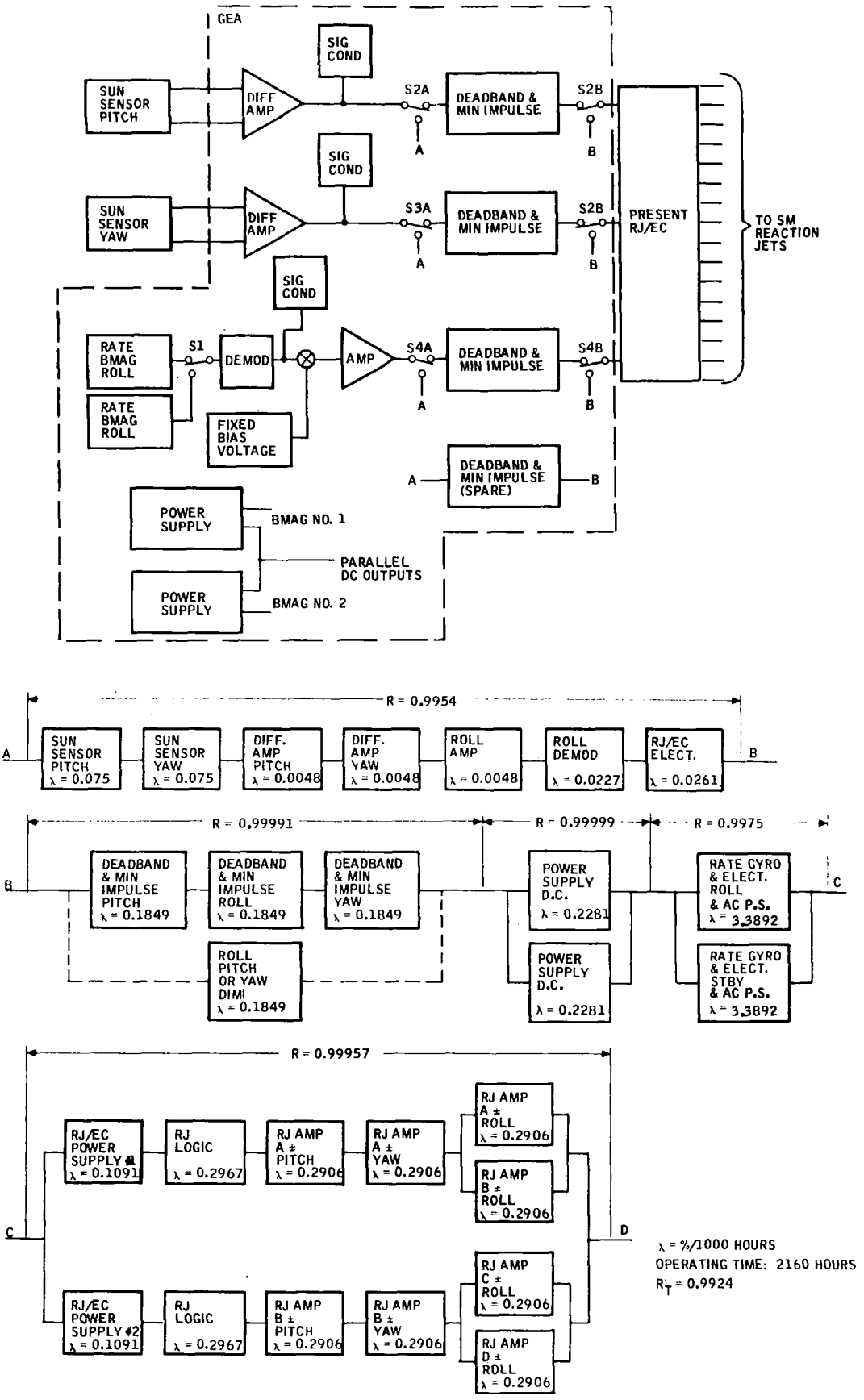

Figure 4-10. Modified ESS and Resulting Reliability Logic

Table 4-10. ELOR Stabilization System Tradeoffs

Approach	Reliability	Weight (Pounds)	Volume (Cubic Inches)	Power (Watts)
No. 1: Basic ESS (includes GEA) and 2 sun sensors)	0.9090	13.8	518 (4 welded modules)	14.7
No. 2: Basic ESS plus redundant BMAG	0.9714	16.5	560 (5 welded modules)	16.7
No. 3: Basic ESS plus redundant BMAG, deadband minimum-impulse	0.9830	16.7	560 (5 welded modules)	17.5
No. 4: Basic ESS plus redundant BMAG, deadband minimum-impulse, power supply	0.9924	20.6	662 (7 welded modules)	27.0

The gyro failure rate of 2.8 percent per 1000 hours is an average failure rate based on a 90-day mission. It includes allowances for time-dependency caused by spin-motor wearout characteristics. The predicted failure rate for the sun sensor was obtained by applying a 1973 build growth rate to Honeywell's standard failure rate for a photo diode. These data are known to yield a pessimistic estimate, so the actual value for P_{90} will approach or exceed the desired 0.999 by the time the system is qualified.

Further redundancy, such as redundant sun sensors and a third BMAG, could be added to improve P_{90}. The increase in cost and weight is considered unwarranted, since P_s is not directly dependent upon the ESS reliability. Certain ESS failures, such as a parameter shift beyond specification, would degrade performance, but in many cases would not require mission termination. Other failures, such as a sun sensor failure, would require shutdown of the ELOR stabilization system. A mission abort would be scheduled in this instance with normal SCS control of the CSM during rendezvous. The P_s for the SCS during the three-hour rendezvous period is calculated to be 0.9992; thus, an ESS failure might shorten an ELOR mission, but would not compromise crew safety.

To satisfy the diagnostic and monitoring requirements the signal-conditioned outputs representing pitch attitude, yaw attitude, and roll rate will provide a significant measure of ESS performance on a continuing bases. In addition, where necessary, normal SCS signal conditioning can be remotely enabled to facilitate troubleshooting and fault analysis.

In-flight support requirements include—

1. Remote turn-on and turn-off of GA No. 1, GA No. 2, and ECA and electronic display assembly (EDA) in the SCS.

2. Remote switchover from SCS to ESS control and vice versa.

3. Remote enable and disable of the SM reaction jets.

4. Remote selection of redundant components.

ELOR electronics weight, volume, and power consumption range from 13.8 pounds, 518 cubic inches, and 14.7 watts to 20.6 pounds, 662 cubic inches, and 27.0 watts in the approaches considered. Weight and volume computations are based on a GEA packaging concept similar to that used in the Block II SCS and a sun-sensor design as shown in Figure 4-8. Up to six welded modules would be contained in the GEA plus one or two heaterless BMAG's.

Conclusions and Recommendations

In consonance with one LMSC recommendation, (NAS8-21006) the analysis indicates that spin stability is the best operational mode; however, the system analysis indicates that the Apollo II SCS would not approach the desired P_s (about 0.55). A much less complex approach is to provide an ESS that will meet the requirements with no more than a 6.8-pound weight penalty. The required system could be developed and qualified within two years. The Apollo II SCS will perform the translunar and transearth control without any changes and is expected to exceed the Apollo crew safety criteria.

Maintenance and/or repair in the conventional sense is not recommended for this system, since the requirements for the SCS are less stringent than for Apollo DRM; and the requirement for maintenance would be greatest when man is not available to perform it. Therefore, a form of self-healing or adaptive electronics is recommended in its place.

4.1.5 Communications and Data System (C&D)

NOTE: Much of the information used herein was provided by the Collins Radio Co., through Reference 4-8.

Functional Requirements and Constraints

The ELOR mission consists of three basic mission segments as they affect the CSM C&D Subsystem. These mission segments and the time duration as they affect the C&D functions are shown below:

Segment A (manned translunar phases)	166.6 hr*
Segment B (unattended lunar orbit or or quiescent)	2201.3 hr
Segment C (manned transearth phases	112.8 hr**
Total mission time	2480.7 hr

The C&D functions and duty cycles for Segments A and C are identical with the corresponding phases of conventional Apollo DRM. The resulting functional requirements for these phases are the same as for the DRM. The effects on the mission should also be unchanged.

This system has little effect on the probability of safe return during the manned or unmanned phases. It does, however, affect the stay-time and, therefore, P_{90} and P_a. These mission-critical functions are limited to those required to relay status and commands permitting changes in operational mode or redundancy switching. As a result, Segment B, the quiescent phase, requires two new functions not included in Apollo II. These functions, status monitoring and remote control, are required for the entire 90-day unattended orbit period and will necessitate some modification of the present Apollo II subsystem. The basic requirements for these new functions are—

1. Status monitoring shall be included to analyze the condition of all system functions wherein a failure would preclude safe rendezvous or return to earth. As a minimum, the system would have to indicate when a safe threshold is approached and/or surpassed, providing enough warning (where maintenance is not possible) for the crew to return to the CSM and abort the missions or repair and abort when possible. Status monitoring information is required at the lunar surface or LM during rendezvous and at the MSFN-MCC. It was estimated that up to forty normalized analog inputs must be monitored by the system.

2. Remote control capability shall be included to (1) provide switching between critical redundant systems and functions, (2) provide control for the docking function, (3) provide emergency control of orbital position and plane, and (4) initiate a detailed checkout or diagnostic routine. The LM on the lunar surface or during rendezvous was assumed to have remote control capability for Items 1, 2 and 4 listed above while the MSFN-MCC can control Items 1, 3 and 4. Twenty ON-OFF type commands transmitted at a relatively slow rate were estimated to be sufficient for the lunar surface/LM remote control capability.

The major interface constraints involve—

1. Antenna subsystem interface constraints impose the major mission constraint on the CSM communications functions. A preliminary investigation of the antenna problems has been made, since effective communications cannot be achieved without methods of alleviating the potential problems. The high-gain S-band antenna will not be used during the unattended lunar orbit phase of the mission because of operational complexity (see Section 4.2.5). Therefore, all CSM-MSFN communications must be accommodated by the CSM S-band omnidirectional antennas. The CSM spin will create problems for the CSM dormant-mode communication. This rapid spin rate means that no single CSM S-band and VHF omnidirectional antenna will be pointing at the earth or the lunar surface for periods longer than an estimated 40 seconds; i.e., within -3 db points.

2. It was assumed that at least three stations of the MSFN will be available to enable communications on a continuous basis with at least one station for the entire CSM quiescent phase. These stations are expected to have 85-foot-diameter antennas.

Baseline System Description

The Apollo II C&D system provides a working subsystem on which an extensive amount of weight and reliability data (Table 4-11) are available. This system will provide suitable operating capability for these missions with only minor additions. The Block II subsystem provides the capabilities for navigation, voice, and data communications between the CSM and the MSFN; voice, ranging, and data communications between the CSM and LM; and voice and data communications between the CSM and the extravehicular astronaut (EVA).

A block diagram of a C&D subsystem configuration that can meet the ELOR requirements is shown in Figure 4-11. The system employs maximum utilization of existing Apollo Block II C&D subsystem equipment for all segments of the mission. Those equipments of the C&D subsystem that are necessary to satisfy the ELOR unattended lunar orbit functions are designated by the blocks having heavy outlines. Certain of these equipments are new additions to the subsystem, while others are slightly modified. All other C&D subsystem equipments are unmodified and interfaced with other spacecraft systems in a manner identical with normal Apollo Block II configurations.

Two new equipments, the status monitoring equipment (SME) and the command demodulator-decoder, are added to the subsystem along with modifications of the unified S-band equipment and the VHF/AM transmitter-receiver. Several minor antenna subsystem components, such as switches diplexers, and power dividers, and the up-data link system are required for the remote-control concept, but are covered in other sections of this report.

The VHF recovery beacon has a single function to provide line-of-sight beacon transmission during earth-landing and recovery operations. It consists of a VHF amplitude modulated transmitter.

The VHF triplexer is a 3-channel passive filter device. It provides the necessary isolation to permit single-channel or simultaneous 2- or 3-channel transmission and/or reception with a common antenna.

The VHF/AM transmitter-receiver consists of two independent VHF/AM transmitters and two independent VHF/AM receivers in a single package. One transmitter and receiver provide for transmission and reception of voice communications on a single preassigned frequency. The other transmitter and receiver provide for transmission and reception of voice communications on a second preassigned frequency. External switching and the VHF triplexer permit the receivers and transmitters to be used in any combination of the two channels for voice communications. This unit also provides for the reception of data (such as EVA biomedical) at the same frequency. The VHF/AM transmitter-receiver also provides for the transmission and reception of ranging signals to and from the LM.

The digital ranging generator (DRG) provides for range measurements between the CSM and the LM during rendezvous. The DRG provides sequential tones to the VHF/AM transmitter-receiver, which transmits the ranging signal along with voice to the LM. The LM receives the composite signal and transponds the ranging signal on the duplex frequency. The CSM's DRG then receives the ranging signal and after internal processing provides a range readout to the command module computer and/or the entry monitor system.

NOTE: Where the CSM is unmanned during CSM-LM rendezvous, consideration should be given for interchanging the CSM-LM ranging functions.

The audio center consists of three electrically identical sets of circuitry (stations), which enable parallel selection, isolation, gain control, and amplification of all spacecraft voice communications.

Each station is operated from a remote-control panel, which provides each astronaut with independent audio control of common S-band, VHF/AM, and intercommunication circuits. Each astronaut is provided with individual microphone and earphone jacks. In the event of a station failure, the failed station microphone and earphones may be plugged into one, but not both, of the remaining stations. Because of this feature, two of the three stations will produce a successful mission.

Unified S-band equipment (USBE) consists of two redundant S-band phase-locked transponders and one FM transmitter. Each transponder consists of a transmitter, receiver, and power supply. The FM transmitter is electrically independent of the transponders. Only one transponder is active at a given time; however, simultaneous operation of the FM transmitter and one of the transponders is possible.

The S-band power amplifier consists of two 20-watt travelling-wave-tube power amplifiers with associated power supplies, control circuits, and a multiplexer mounted on a common chassis. It provides for either amplified or bypass transmission in the PM mode. It also provides for amplified, but not bypassed, FM transmission. The multiplexer provides a receive signal from the antenna and isolates the amplifiers so that PM and FM transmissions are possible simultaneously or separately. The PM bypass mode is for emergency use only.

The status-monitoring function requires use of the status monitoring equipment (SME), unified S-band equipment (USBE), VHF/AM transmitter-receiver, VHF triplexer, and the associated VHF and S-band omnidirectional antennas. The SME provides the capability to continuously monitor selected critical parameters of the CSM while in the unattended orbit phase.* Up to forty normalized analog inputs can be accepted by the SME and compared with preestablished limits to assess the status of the unattended CSM. Upon detection of beyond specification condition, the SME activates the CSM to MSFN and CSM to lunar surface/LM data links for transmission of alarm and status information. The CSM-to-MSFN data link will be handled via the unified S-band system (USBS), while the CSM to lunar surface/LM link will be accommodated by the existing VHF/AM transmitter-receiver.

(*)See Appendix J for a list of parameters now monitored.

The SME is new equipment; details are presented in Appendix I (Volume II). It consists of analog gates, analog-to-digital converter, programmer, comparison circuitry, synchronization generator, data modulators and a power supply. Each of the forty data channels will be sampled at a rate of once per ten seconds by the SME and converted into an eight-bit word. The PCM encoded data will then be serially compared with two reference words representing the upper and lower limit for each channel. The comparison matrix will employ decoding logic to provide up to forty reference-word pairs, which will permit comparison of each analog input with an independent reference.

Upon detection of a malfunction, the SME will activate the data transmitters, and the serial digital data stream of approximately 40 bits per second will be processed for transmission. The SME serial data will biphase-modulate a 4.7 kHz subcarrier for transmission to the MSFN via the USBS. The SME will also process the CSM status data for lunar-surface/LM transmission by frequency-shift keying (FSK) a data tone. The FSK tone may also serve as an audible alarm tone by frequency-dividing a processed form of the tone.

The adaptive system data acquisition programmer (ASDAP) concepts, as recommended by LMSC (Reference 1-2), are not implemented in the recommended SME. Basically, the ASDAP would continuously monitor CSM status points and transmit status information upon detection of out-of-tolerance conditions, but also would periodically transmit status data irrespective of the status of the monitoring points. The period selected for transmission would vary as a function of mission duration and status of the monitoring points. During the initial portion of the unattended orbit phase the status, information would be transmitted frequently, perhaps once per hour. After a given period of successful operation, the ASDAP would lengthen the transmission periods to once per day.

A major problem with the ASDAP concept is lack of knowledge of when favorable transmission conditions exist; i.e., when the CSM is not occulted by the moon. The G&N subsystem is not operative and, therefore, cannot provide such information. One remedy for the problem would be to use the AGC from the USBE's S-band receiver as an indication of when CSM-MSFN transmission would be possible. Because this method depends on the use of the S-Band link, however, it would not be much more difficult to activate the SME by means of an earth-originated command over the MSFN-to-CSM remote-control link when status data are desired. In addition, the lunar-surface/LM may also activate either the CSM to lunar-surface/LM or the MSFN data links by its remote control capability; therefore, the ASDAP is not considered a safe or optimum alternative.

With the CSM-to-MSFN SME data link, the SME data will be transmitted to earth by means of a modified USBE as described in Appendix E. The USBE modifications required for the remote-control as well as the status-monitoring functions are principally necessitated by the spin-stabilization requirements of the CSM.

The present Apollo S-band omnidirectional antennas consist of four flush-mounted antennas located at approximately ninety-degree intervals around the command module. The antennas are presently selected manually on an individual basis by the astronaut controlling the switching while observing the received signal strength (AGC display on control panel). It is assumed that communication with the spacecraft is desired on a nearly continuous basis when possible; i. e., when the spacecraft is not occulted by the moon. It is estimated that less than forty-percent communication availability would be possible if only one of the four were continuously utilized. Communication on a continuous basis will require simultaneous use of the four CSM antennas. Phasing problems will arise if the four antennas are directly tied together due to the antenna pattern anticipated. If two diametrically opposing antennas are interconnected, it is estimated that approximately seventy-percent communication availability would be possible. This availability would permit continuous communications between the spacecraft and the MSFN for periods up to forty seconds in duration, which should exceed the requirements.

The recommended modification provides continuous communication availability when both S-band receiver channels are operative by tying the two pairs of diametrically opposed antennas together with power dividers and by operating each of the presently redundant receivers of the USBE from an independent pair of antennas. The AGC outputs of each receiver will be routed to an AGC signal comparator. The comparator will select the receiver that is receiving the best signal based upon an AGC signal characteristic and switch the S-band PM exciter output to the corresponding pair of antennas. The comparator will also select the best received signal and route this to the SME for demodulation of the up-data subcarrier. Failure of any S-band receive channel will limit the communications coverage to 70 percent.

Acquisition of the up-link MSFN carrier requires a change in operational procedure for the MSFN stations (see Appendix D).

The existing S-band exciter power output is sufficient for adequate communication of the 40-bps SME data. A circuit-quality calculation for the CSM to MSFN SME data link is presented in Appendix E.

When in the ELOR mode, the recommended modification will reduce the sensitivity of the S-band receiver by 3.5 to 4 db from that of the normal

omnidirectional antenna mode; however, the present omnidirectional command mode has sufficient margin to absorb this degradation.

The S-band omnidirectional antenna system must be modified to provide the antenna changes described previously. Four two-position switches will be required for this modification along with two S-band diplexers/power dividers. The switches will be manually set by the CSM astronauts prior to departure to the LM as shown in Figure 4-11. This setting will connect the diametrically opposing pairs of antennas through the S-band diplexer/power divider. By setting the new two-position switches in the other position normal omnidirectional antenna modes of operation will be obtained. Approximately one-half db of additional attenuation will be seen in each omnidirectional antenna line due to the insertion loss of the added switch.

The CSM to lunar-surface/LM SME data link will use the CSM's VHF/AM transmitter. The present VHF/AM transmitter can be used to fulfill the requirements with the modification described in Appendix I. The receiver end must have a data demodulator and decommutator suitable for stripping the data from the FSK tones and for processing and displaying the CSM status data.

The CSM VHF antenna's system must be modified because the 0.5 revolutions per minute will not permit continuous VHF antenna coverage when communicating with the lunar surface. The present VHF antennas consist of the two flush-mounted antennas located on diametrically opposite sides of the service module. Block II operations permit omnidirectional antenna selection manually, one at a time. The modification consists of the addition of three two-position manual RF switches and a power divider to permit simultaneous operation of both antennas. The astronauts will set the position of the switches (Figure 4-11) for ELOR operation. In the other position, the normal Apollo modes of operation exist. Approximately 1 db of insertion loss in transmission path to one antenna and one half db in the other will result from this modification. Appendix F contains the circuit quality calculation for the CSM-to-lunar-surface SME data link.

The remote-control functions require the use of the USBE, VHF/AM transmitter-receiver, VHF triplexer, command demodulator-decoder, SME, and associated antennas as modified in Appendix I.

Remote control of the CSM by the MSFN will be via the normal S-band up-data link. The MSFN can transmit ON-OFF commands and orbit-plane or position information to the CSM. In addition to the C&D subsystem equipment, the up-data link equipment (UDL) will be required for demodulation and decoding of earth-originated commands (see Section 4.1.7).

The lunar-surface/LM remote control of the CSM will be by means of the VHF/AM link. The lunar-surface/LM remote-control capability will be limited to ON-OFF type commands, which will be received by the CSM's VHF/AM Receiver and routed to the Command Demodulator Decoder for demodulation, decoding and conditioning for driving external ON-OFF devices.

Verification of commands received from either the MSFN or LM may be accomplished by transmitting status data from the SME to the command source. Use of the SME data link for command verification will limit the command rate to approximately one command per ten seconds if one SME channel is used. If additional SME channels are allocated, the command verification rate can be increased. The alternative to using the SME data link for verification of MSFN originated commands is to use the existing method of up-data verification which is by means of the low-bit-rate PCM channel over the coherent S-band link. With this method of verification, a command capability that is identical to that used during the normal manned lunar mission modes of operation is provided. However, the S-band power amplifier, PCM telemetry equipment, and premodulation processor (PMP) are required for this method; and, unless faster command rates are required, this method is not recommended.

MSFN remote-control capability may be implemented through the existing S-band up-data channel with modifications to some equipment associated with the function (see Appendix I). The command capability will be identical with the baseline Apollo system in that ON-OFF type commands as well as digital information for the central timing equipment and guidance and navigation system can be handled; however, the command rate will be much slower because of the verification rate described previously.

The S-band transponder must have both receivers operative simultaneously, each connected to diametrically opposing pairs of the S-band omnidirectional antennas, to provide continuous antenna coverage during the spin stabilization of the CSM. The S-band transponder and S-band omnidirectional antenna modifications previously described will serve to fulfill the MSFN remote-control requirements as well as the SME to MSFN data transmission function.

The output of the USBE, as selected by the AGC comparator will be routed to the SME. An up-data demodulator similar to the module presently employed in the premodulation processor (PMP) will be incorporated into the status-monitoring equipment (SME).

The up-data demodulator was placed in the SME package merely for a convenient mounting location for the small module. The up-data demodulator of the PMP was not used for several reasons including maintaining

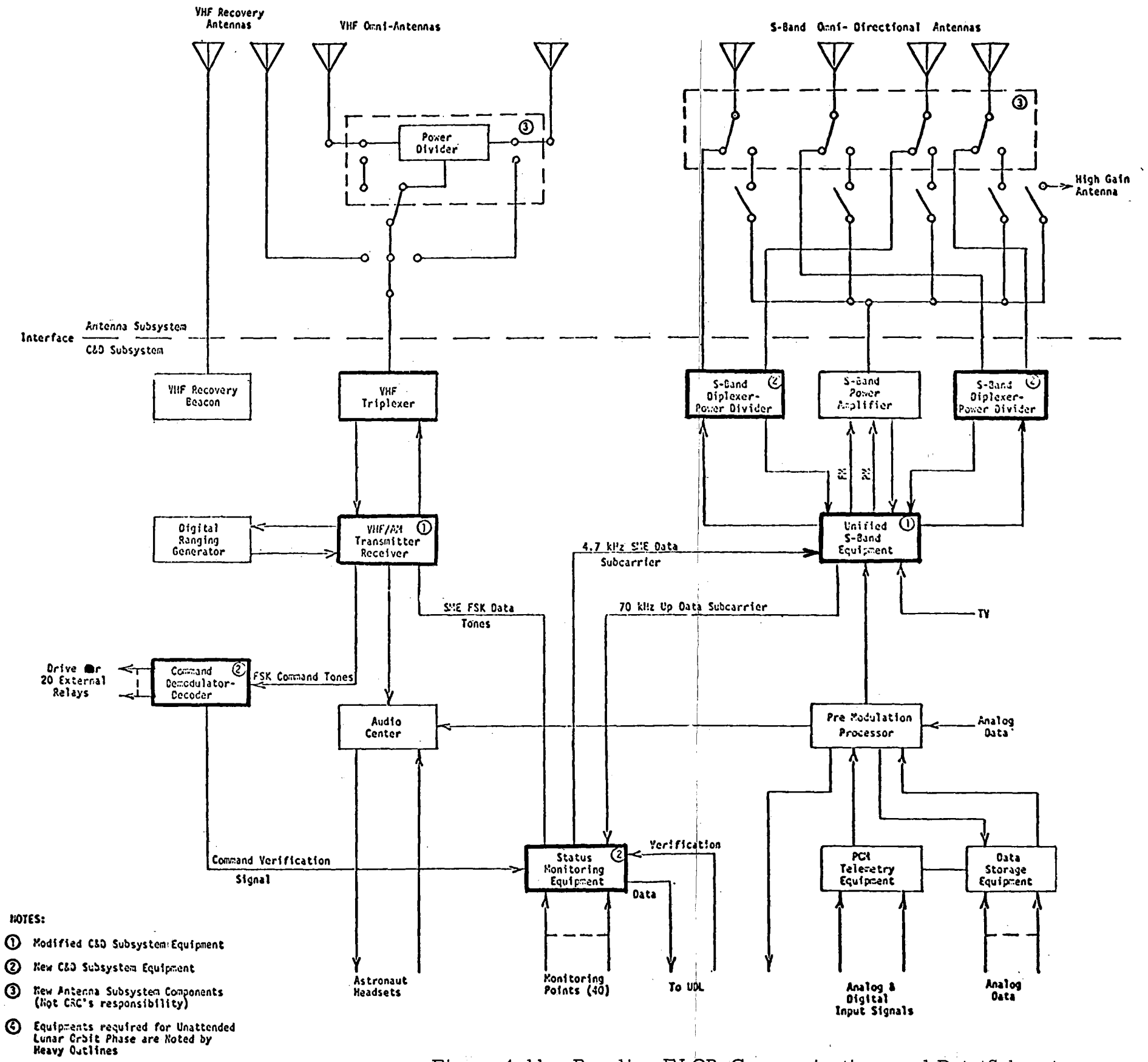

Figure 4-11. Baseline ELOR Communications and Data Subsystem

the reliability goal for each segment of the mission and to conserve spacecraft power by not wasting power on unnecessary PMP functions.

The UDL described in Section 4.1.7 must operate continuously (at least in a standby condition). If the reliability of the overall function, including the UDL, is not satisfactory, the command decoder could interface with the SME to accept the demodulated USBE output and provide a limited number of ON-OFF type commands. Another scheme for minimizing UDL ON-time could be devised by using the USBE's AGC to activate the UDL.

Verification of the MSFN-originated up-commands may be handled by activation of the SME to MSFN data link. One data channel of the SME can be allocated to the UDL to accommodate the verification function. Normally the UDL sends an 8-bit parallel-data word to the PCM telemetry equipment to ascertain that an up-data message with the proper coding, address and, length had been received by the unit and that the command was executed. This verification word can be processed in the SME to permit validation of the command with one SME data word. If this method is used, a command to activate the SME to MSFN data link must be executed before the desired command can be sent by the MSFN. A circuit quality analysis for the MSFN-to-CSM remote-control link is presented in Appendix G. Appendix D is a discussion of some operational-ground-station procedures that may be required to assure that the CSM USBE receivers can acquire the MSFN up-link carrier signal and have sufficient time available for reception of commands before the CSM will turn another antenna toward earth.

Lunar-surface/LM remote-control capability may control the unattended CSM over the existing VHF/AM communications link as an optional backup mode. A limited number of ON-OFF type commands may be accommodated by transmission of a command message of digital format by frequency-shift-key (FSK) modulating a subcarrier. This concept requires incorporation of an encoder and modulator in the LM and a command demodulator-decoder in the CSM.

The existing VHF/AM receivers in the CSM will require minor modifications as described in Appendix I. The CSM VHF antenna system modification previously described for the SME-to-lunar-surface/LM data link will fulfill the requirements for this function also. The SME-to-lunar-surface/LM data link will be used for command message verification.

The command demodulator-decoder will consist of an FSK data demodulator, synchronizing circuitry, digital command decoder, and twenty relay drivers. The up-link command will consist of a bilevel signal that will

provide a self-synchronizing data message format. The commands will be in a digital format with the first group of pulses of each message used for addressing the decoder for system synchronization purposes. Complex message coding is not expected to be required, because the circuit quality is quite good for this link. It is proposed, however, to transmit the command word twice for each message. The decoder would require correct receipt of two command words and the synchronizing code before execution. The address will be 10 bits in length, while each command word will be 5 bits in length, resulting in a message length of 20 bits. A transmission rate of 20 bits per second is assumed to be adequate for the link.

The CSM-to-lunar surface/LM SME data link is used for command verification. The initial command transmitted to the CSM preceding any other command message, must be for activation of the SME data link. The SME can provide a data channel for transmission of verification information such as acknowledgement of receipt, proper processing, and execution of a lunar-surface/LM-originated command.

A circuit quality estimate for the lunar-surface/LM-to-CSM remote-control link is presented in Appendix H.

System Analysis

The analysis of the ELOR C&D system must consider the manned and unmanned phases separately. The analysis was based on Apollo II data reported by Collins Radio in Reference 4.11 and summarized in Table 4-11.

The manned phases do not contribute to either P_s or P_{90}, because the mission could be completed without any communications so long as the G&N continued to function; nevertheless, its probability of no failure for the manned phase (R.) is better than for the DRM because of the lower operating time. R. is estimated to be better than 0.99.

The quiescent-phase functions contribute to both P_{90} and P_s in that some potential failures would either make rendezvous difficult or would prevent status assessment. The remainder of the analysis is devoted to the quiescent critical functions.

The following assumptions were also used in the analysis:

1. All C&D subsystem equipments used are correctly operating when the crew leaves the CSM.

2. The ELOR quiescent mission time is 2,201 hours.

3. The transmitters of both the VHF/AM equipment and the USBE will operate for 24 hours for the first day plus 45 minutes per day thereafter for up to 90 days, yielding a total operating time of 90 hours during the lunar orbit phase. Other equipment required for this phase will operate continuously with the exception of a portion of the command demodulator-decoder, for which the estimated usage is 90 hours.

4. Reliability data in Collins Specification 514-0004, Rev. E, are valid.

The logic diagram for the quiescent phase is shown in Figure 4-12. Table 4-12 shows the estimated P_{90} for each equipment of the subsystem and an overall subsystem P_{90} of 0.86 for the mission, which is unsatisfactory.

The USBE is the most critical equipment in the system, mainly because of the fact that the two normally redundant receivers of the USBE are required to operate simultaneously to provide the desired continuous communication capability.

Table 4-11. Apollo Block II C&D Subsystem Equipments*

Equipment	Failure Rate (%/1,000 Hr)	Weight (Pounds)
VHF recovery beacon	0.109	2.3
VHF triplexer (Note 1)	0.0067	1.6
VHF/AM transmitter-receiver	1.519	12.2
Digital ranging generator	1.783	7.0
Audio center (three stations)	0.51	7.5
Premodulation processor	0.665	11.4
Data storage equipment	4.50	40.0
PCM telemetry equipment	0.111 (Note 1)	42.7
USBE PM transponder	1.94	31.6 (Note 2)
FM transmitter	0.68	
S-band power amplifier	1.21	31.6 (Note 3)

Notes: 1. Failure rate reflects built-in redundancy.
2. Includes two PM transponders and one FM transmitter.
3. Includes two redundant amplifiers.

*Excludes results of ELOR modifications

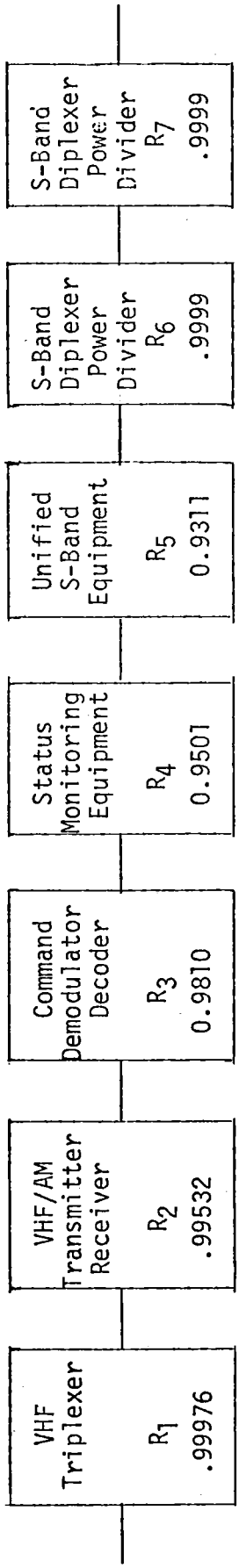

$$R_{overal} = R_1 \times R_2 \times R_3 \times R_4 \times R_5 \times R_6 \times R_7 = 0.86$$

Figure 4-12. Baseline ELOR C&D Subsystem Reliability Logic Diagram

Table 4-12. ELOR C&D Subsystem Reliability Improvement Analysis

Equipment		Baseline System	Step 1	Step 2	Step 3	Step 4	Step 5	Step 6
R_1	VHF triplexer	0.9998	0.9998	0.9998	0.9998			
R_2	VHF/AM transmitter-receiver	0.995	0.995	0.995	0.995	0.995	0.995	0.99998
R_3	Command demodulator-decoder	0.98	0.98	0.98	0.995	0.995	0.9992	
R_4	Status-monitoring equipment	0.95	0.95	0.998	0.998	0.998		
R_5	Unified S-band equipment	0.93	0.996	0.996	0.996			
R_6	S-band diplexer power divider	0.9999						
R_7	S-band diplexer power divider	0.9999						
R_8*	Rcv/Xmit equipment					0.99998		
	Mission P_{90}	0.86	0.92**	0.97**	0.98**	0.993**	0.994	0.998

*R_8 is the parallel combination of R_1, R_2 and R_5, R_6, R_7.
**The subsystem represented by this reliability estimate is based upon compromised functional requirements.

The first step taken in improving P_{90} was to examine the requirement for continuous communication between the CSM and MSFN throughout the quiescent phase. Although continuous communication may be desirable, it must be recognized that, during the period when the CSM will be occulted by the moon, communication with the MSFN is not possible. This occulted period lasts approximately one half of the two-hour orbit. There is no recourse other than to accept this physical limitation on communications. Because less than continuous communication is actually required, the operational procedure can be adjusted to conform with the physical constraints and communications planned only when possible. Since either one of the two receivers can provide adequate communications, these receivers of the USBE and the S-band diplexers-power dividers can be considered in parallel, which would essentially be providing active redundancy for this portion of the subsystem. This technique would reduce communications capability to approximately 240 degrees of the lunar orbit if a failure in either receiver occured. Approximately 40 seconds of unbroken communications will be possible twice per revolution and will permit transmission of perhaps three frames of SME data and/or three or four commands to be received during each 40-second period. The USBE P_{90} contribution will increase from 0.931 to 0.9996, and the subsystem will be at least 0.92.

The second step involves the status monitor equipment (SME) with reliability of 0.95. To improve its reliability, it was necessary to provide internal standby redundancy. This approach increases the reliability of the SME from 0.95 to 0.998 and the subsystem P_{90} becomes 0.97.

The third step (Table 4-12) involves the command demodulator-decoder (CDD) with a first estimate for reliability of 0.98. A gain in reliability is achieved by an operational procedure. Provisions to turn off part of the decoder when not in use would substantially reduce its duty cycle and not compromise its function. It was estimated that this portion of the decoder would be active for the first 24 hours plus 45 minutes per day thereafter, yielding a total of 90 hours. This concept resulted in a reliability of 0.995 for the CDD and a P_{90} of 0.98 for the overall subsystem.

Since the ELOR C&D subsystem P_{90} is still not close to the desired objective an overall examination of the system with regard to rendezvous operations was undertaken. It was found that, as long as one of the two remote-control links was operating, there would be no reduction to P_{90} or P_s, which allows the VHF/AM transmitter-receiver and VHF triplexer to be considered in parallel with the USBE and S-band diplexer-power dividers. Consequently, the combined reliability for the VHF/AM transmitter-receiver, VHF triplexer, USBE, and S-band diplexer-power dividers is changed from 0.99 to 0.9998, thereby giving a system P_{90} of 0.993.

To achieve Step 5 of Table 4-12, the command demodulator-decoder was redesigned to include some internal active redundancy (see Appendix I). This modification resulted in an estimated system P_{90} of 0.994.

To achieve Step 6 and approximate the subsystem objectives, a second VHF/AM transmitter-receiver could be added. This addition would complicate the design somewhat as reflected in Appendix I; however, the recommendation is feasible and would permit achieving a system P_{90} of about 0.998. A spare to be used for the return trip (manually changed) may accomplish nearly the same.

During the manned portions of the mission, M&R can be performed and may be required after the long quiescent period. Two required functions of the CSM for the manned portion of the flight and their presently specified and predicted Apollo Block II reliability requirements are shown in the first three columns of Table 4-13. The reliability of these functions with the ELOR impact included is shown in the third column. The sixth column shows the reliability for these functions when a spare USBE and a VHF/AM Transmitter-Receiver is added to the subsystem.

Table 4-13. C&D System Status

Function	Present CSM Reliability	P_{90} for ELOR	Function P_{90} With Spare		
S-band voice Xmit and rcv	0.999	0.998	1	USBE	0.9999
VHF/AM voice Xmit and rcv (CSM-MSFN)	0.999998	0.9996	1	VHF/AM	0.999998

Presently, no C&D subsystem function or equipment is considered vital to crew safety for the manned Apollo DRM; however, since S-band voice, as well as other functions such as telemetry and up-data are very desirable for manned portions of the mission, one complete USBE is recommended as a spare; this adds only 31.6 pounds to the spares complement.

The UHF/AM transmitter-receiver is not recommended as a spare, since it nearly approximates the requirement.

Conclusions and Recommendations

The subsystem configuration based upon maximum utilization of the present Apollo Block II CSM C&D subsystem requires two new items of equipment, the status monitoring equipment and the command demodulator-decoder, along with modifications to the VHF/AM transmitter-receiver and the unified S-band equipment. This configuration will satisfy the ELOR requirements and not introduce any development problem.

The contribution to satisfactory completion of the 90 days for the selected subsystem configuration is over 0.993 for the unattended lunar orbit phase of the mission and over 0.99 for all phases. The recommended subsystem concept provides status monitoring and remote control capabilities between the CSM and lunar surface/LM and the CSM and manned spaceflight network (MSFN) during the unattended lunar orbit phase of the mission. The reliability estimate was based upon criteria that (1) the mission is not affected by loss of one of the two remote-control or status-monitoring links and (2) the mission is not affected by loss of communication capability between the CSM and MSFN for short periods (i.e., a cycle of 40 seconds availability followed by a 20-second unavailability period of communications will be imposed for each half revolution of the CSM due to the spin-rate of once per two minutes.

Maintenance is possible only during the manned phases, and one complete unified S-band equipment is required to provide sufficient subsystem reliability for the manned phases of the mission. This equipment adds only 34 pounds to the mission. The modifications and new equipment required will add a total of about 26 pounds, making a delta over Apollo Block II C&D weight of only 60 pounds. No special monitor or diagnostic equipment is expected to be required; and whatever maintenance is required can be initiated on the basis of data already available. The required development and qualification could be accomplished in about two years.

4.1.6 Reentry Reaction Control System (CM-RCS)

System Description

The CM-RCS is used to provide for attitude control after service module separation, during the earth reentry (Phase 8.0). The system is powered by nonthrottleable pressure-fed engines using hypergolic fuels and ablative chambers. There are two individual systems operating in redundancy. The system is controlled by the CM reaction control system, which has a manual backup capability as well.

System Analysis

The ELOR mission does not change the functional requirements imposed on the CM-RCS except to increase the time it is exposed to space conditions in the dormant state. Because the CM-RCS it does not operate until reentry on Apollo, the same is projected for ELOR; no decrease in reliability or P_s is expected. The one potential failure mode, helium migration into fuels, has been offset by isolating the helium from the fuel with squib valves, until required.

Conclusions and Recommendations

The Apollo II CM-RCS is satisfactory without any changes to the system or profile activity. There is, therefore, no effect on the maintenance concept, development schedule, or support requirements. The system contribution to P_s is expected to be about 0.99997 as is.

4.1.7 The Up Data Link (UDL)

NOTE: Much of the information used herein was provided by the Motorola Corporation through Reference 4.12.

System Description

The primary function of the UDL is to provide the data required to update the guidance computer and central timer as it is received from the MFSN. This function is particularly important because the recommended operational concept involves shutting down the guidance and navigation functions during the quiescent lunar orbit phase. In addition, the UDL must operate intermittently throughout the quiescent phase to provide a remote-control channel that will demodulate and decode MFSN-originated commands generated to control this phase. See 4.1.5-1 for details on this operation. The operation of this link is critical to the mission in that all control functions must be processed through this system during the unmanned phases. Further, it must provide the capability to return to the normal operating mode to facilitate the rendezvous and docking activity. A functional block diagram is presented in Figure 4-13.

Specifically, the UDL performs spacecraft command and control functions by receiving the signal from the communications link, processing the data, and transmitting the commands to the spacecraft functions serviced. The types of commands to be handled are expected to be much the same as those used for Block II Apollo. They will be coded by subsystem and type of command or data and will include the following:

1. Real-time commands to control the operational mode of some spacecraft subsystems functions.

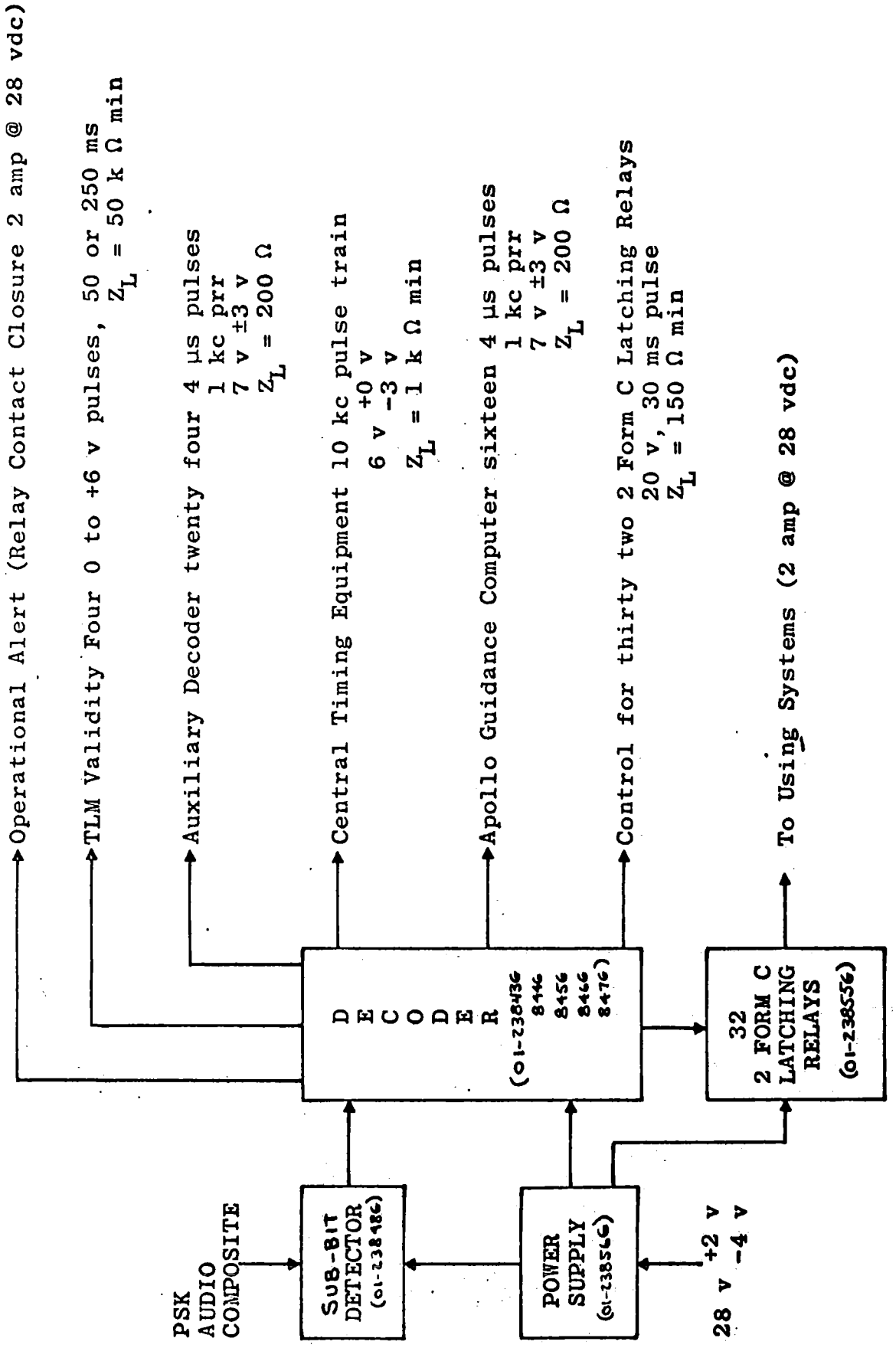

Figure 4-13. Up-Data Link, Function Requirements

2. Insertion of words into the guidance computer to update and/or modify stored information. (Words consist of a storage address and either an instruction or numerical data including updated trajectory.)

3. Update timing.

4. Quiescent-mode control.

5. Redundancy control during quiescent phase.

The data provided by the earth complex depends on the deep-space-net tracking, which is to be the primary mode of navigation for most of the mission. This function is particularly critical for the earth-approach phase where the on-board navigation capabilities are expected to be marginal.

System Analysis

The data used in the analysis of the UDL have been derived from five other programs as well as Apollo. These data assure a valid analysis to a high degree of confidence.

The Apollo UDL is expected to require little to no modification to meet the ELOR requirements. The changes are external; that is, in the usage of the outputs. These changes are presented under the C&D subsystem, Section 4.15-3.

Because the design remains basically unchanged, it is only necessary to apply the UDL to the ELOR mission where the difference with reference to Apollo is in the time and life parameters. The life expectancy is well within the existing UDL capability since it is 100-percent electronics, and wearout is not a problem.

The resulting reliability of a UDL in the Apollo configuration may be computed using a failure rate of 1.076 percent per 1000 hours, as defined for the unit. The probability of no failure during the mission is therefore P_s = 0.97, which is too low. This value is based on operation throughout the mission, which is not required.

Since the failure rate used is associated with elevated temperatures, the expected equipment temperature during the mission will be limited to a normal maximum of 70 F. Further, it is expected to be much lower during the quiescent phase so that a new yet pessimistic failure rate may be achieved by applying a multiplier of 0.5 to the foregoing high-temperature failure rate. It is estimated that the resulting contribution to P_s will be at least 0.99, still operating full time.

A breakdown of the system to subassembly levels is given in Figure 4-14. Respective failure rates are shown in each block. Although the failure rates represent elevated temperature conditions. Relative magnitudes may be easily determined to establish subassemblies that have a higher probability of failure than others.

The four alternatives to be considered in attempting to meet or exceed the desired 0.999 contribution to P_s are—

1. Two UDL's operating in redundant fashion with paralleled output capability yield a contribution to P_s of about 0.9999. This number represents a maximum estimated reliability, because additional circuitry will be required in the UDL to allow outputs to be connected in redundant fashion. With this technique, no information or capability is lost in the switchover or replacement process.

2. One spare UDL in a standby redundant mode with paralleled output capability and manual or automatic switching between the two or, as a third alternative, replacement of the total UDL package. Either of these arrangements will increase the resulting contribution to P_s to 0.99995, which is more than adequate.

3. Reduction of operating time/USBE signal activation will result in a much lower duty cycle and, as a result, an improvement in the contribution to P_s which would be better than 0.997 based on 22 hours of commands. This assumption is pessimistic; but because it is an assumption, it may be a less desirable alternative than Alternative 2, which requires no assumptions.

4. Maintenance and/or repair of the UDL can be accomplished at two levels in its present form, with minor modifications; however, for the ELOR mission, M&R is practical only after return to the CSM, Phase 6.17. One sandwich assembly and/or three of the motherboards contribute over 70 percent of the mission failure hazard. The sparing concept could be established to work at either or both of these levels; however, three of the sandwich boards must be spared to reduce the risk of no spare and reduce P_s to less than one in a thousand. Four motherboards were required to accomplish the same purpose; the motherboard is rated at a lower level of assembly than the sandwich level. Of the two levels, the sandwich level may be the best selection, because one must be spared in either concept, and, in addition, the diagnostic requirements are far less.

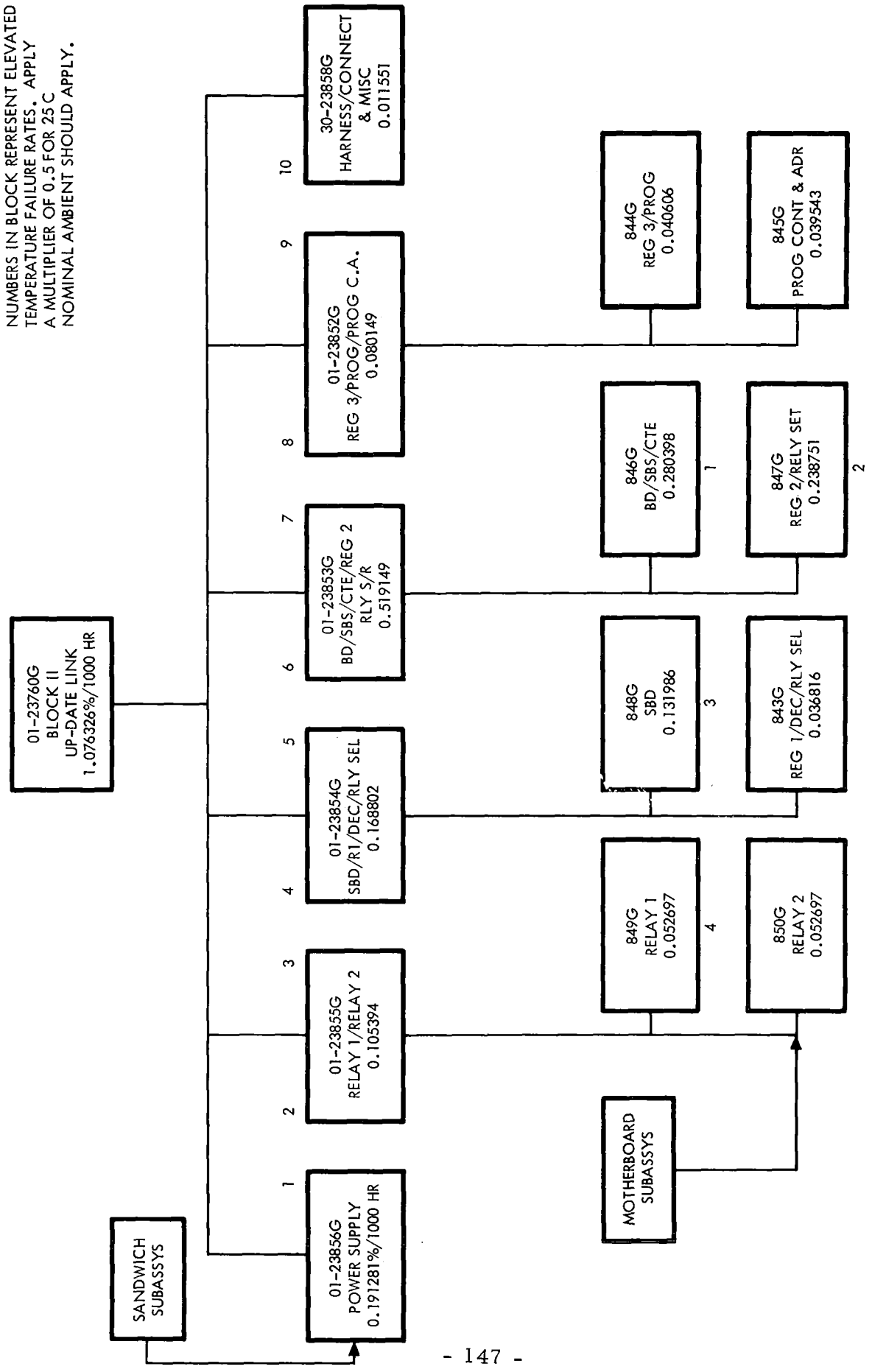

Figure 4-14. Reliability Tree, Up-Data Link

Since M&R actions can only be implemented during the manned phases and would only be required after return from the lunar surface, the resulting contribution to P_S could not exceed about 0.998. Because a spare UDL without M&R, Option 2, will exceed any reasonable objective, this option without any planned M&R actions seems the obvious choice, it adds 19 pounds to the CM.

Conclusions and Recommendations

The Apollo II UDL will satisfy the ELOR-UDL requirement with minor modifications in the application of some circuits for the command link activities. One spare UDL is recommended with automatic or switching on command from the MSFN. This spare will add only 19.0 pounds to the spacecraft and will require no additional test equipment, tools, or other support items.

4.1.8 Central Timing System

NOTE: Much of the information used in this section was provided by the General Time Corporation through Reference 4.13.

Subsystem Description

The functions of the central timing equipment (CTE) are straightforward because it provides the master time reference for all mission systems. The outputs appear in two forms, time accumulation and frequency division. The CTE is a single component of about a ten-inch cube; internally, it has four module boards and weighs about ten pounds. The function is required to facilitate navigation measurements and apply a thrust vector. It may be updated via the up-data link system. Complete loss of the function would impair crew ability to return safely; therefore, it is considered to be a critical function.

The CTE consists of four functional subsystems:

1. Power supply
2. Oscillator
3. Frequency divider
4. Time accumulator

The CTE power supply subsystem consists of two separate identical pulsewidth-modulated power supplies, each capable of handling full load. The power supplies are fed by nominal 28-volt d-c lines (see the functional block diagram of Figure 4-15.)

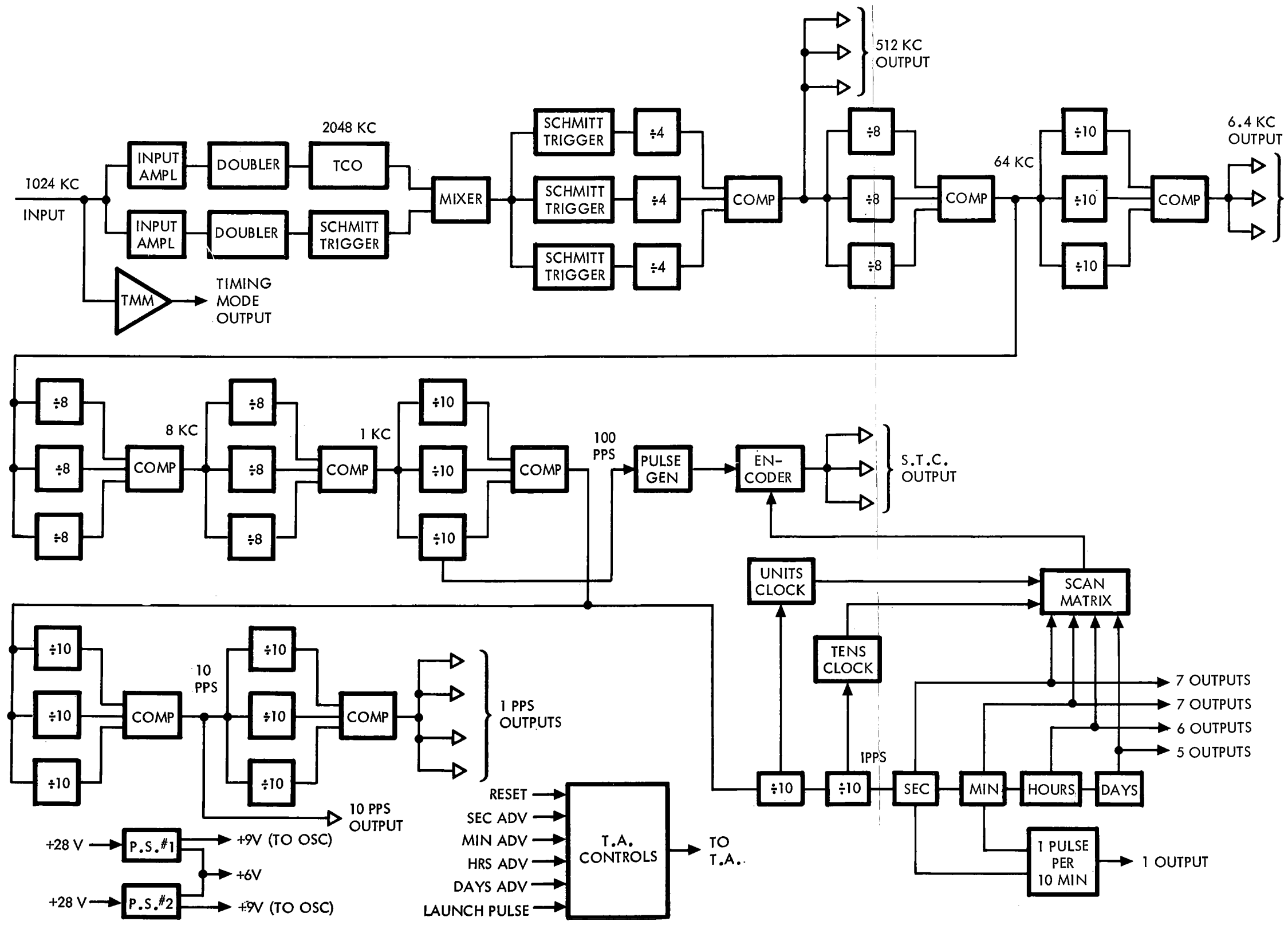

Figure 4-15. Central Timing Equipment, Functional Block Diagram

The oscillator is a highly stable device and can operate in a primary or secondary mode. The primary mode is an internal 1,024-kHz oscillator. In the secondary mode, the CTE is driven by an external 1,024-kHz signal. Both signals are double, shaped, and fed to a divide-by-four majority logic network. The oscillator output is 512 kHz.

The frequency divider is composed of successive two-out-of-three majority logic networks that divide the 512-kHz signal down to one Hz.

The time accumulator subsystem is composed of two sets of outputs. The first of these is a serial time code output conforming to the IRIG B format; the second is a set of parallel time-code outputs.

Subsystem Analysis

The reliability goals for the Apollo CTE have been established for the Apollo DRM under specific environmental conditions that are commensurate with the ELOR mission requirements. These requirements are as follows:

1. For any set of time-accumulator outputs, the probability shall be 0.999.

2. For any single frequency-divider output, the probability shall be 0.999999.

The CTE utilizes various types of internal redundancy to achieve the reliability goals and is critical in that it contributes to P_S. The power supply is a one-out-of-two parallel arrangement whereby each power module is capable of handling the full load in the event of failure of the other.

The oscillator section utilizes dissimilar parallel redundancy. This arrangement allows the internal crystal oscillator to phaselock with an externally supplied signal of the same frequency. In the event of failure of the external signal, the internal oscillator continues to provide the correct signal to the frequency dividers without any loss of count.

The frequency divider section uses two-out-of-three majority vote logic. The output from the oscillator or previous divider is fed to three independent divider chains. Any two of the three chains must have identical frequencies and be in phase for a proper output for that divider stage to be present.

Additional component part redundancy is used in various circuits to guard against shorts or opens, depending upon the criticality of the part to successful circuit operation.

The subfunctional level reliability logic for the CTE is comparatively simple as expressed by the logic diagram below. The reliability of the total function for the mission is at least that of the Apollo Mission, since the proposed duty cycle for the recommended operational concept is only 163 hours versus at least 190 for Apollo. The resulting estimated contribution to both crew safe return (P_s) is at least 0.9998. Figure 4-15 is a functional picture of the redundant design.

The P_s is sufficiently high so that it is considered unlikely that any maintenance will be required. If it were required, the CTE could be replaced as a unit either by providing an on-board spare or by cannibalizing the LM. Cannibalization would be permissible, since the maintenance would most probably be required just after the docking in lunar orbit.

The CTE is satisfactory as is for the ELOR mission and is not expected to require any changes, only a life test.

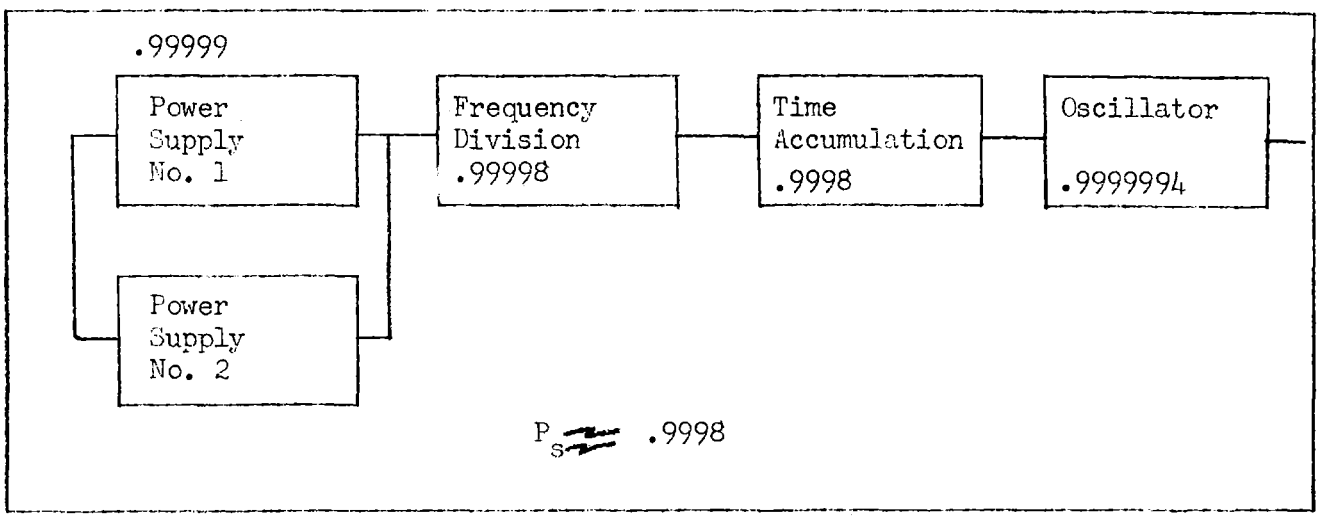

Reliability Logic, CTE, Subfunctional Level

4.1.9 Earth Landing System (ELS)

NOTE: Much of the information used herein was provided by the Northrop Ventura Company through Reference 4.14.

Subsystem Description

During the lunar orbit phase, the ELS is in a dormant mode, with no functional requirements. The only requirement prior to earth entry is that the recovery system be able to withstand exposure to the ELS compartment environment throughout the mission without nonrepairable degradation of operability or nonrepairable degradation of system performance to a point

below specification levels. The system is limited to one use cycle and therefore cannot be tested in the conventional sense of the word prior to its intended mission. This limitation applies to a normal or abort profile.

The Apollo Block II increased capability ELS consists of—

1. One forward heat shield mortar assembly.

2. Two drogue chute mortar assemblies.

3. Three pilot chute mortar assemblies.

4. Three main parachute pack assemblies.

5. Three main parachute riser assemblies.

6. Three main parachute retention assemblies.

7. Two sequence controllers (located in the crew compartment).

The forward heat shield mortar assembly is permanently attached to the forward heat shield. The sequence controllers are installed within the crew compartment. The remainder of the landing system is stowed in bays in the ELS compartment beneath the forward heat shield.

The ELS system operation and design is expected to be identical to that for the Apollo II.

Systems Analysis

Since the only difference between the present Apollo mission and the ELOR mission is the extension of the lunar orbit phase, this factor governs the source of potential ELS problems. The total elapsed time from launch to earth entry was considered to be 99 days for purpose of this study.

Extended exposure to the lunar orbital environment requires analysis of the anticipated effects on the earth landing system. Specific problem areas which require examination include—

1. The possibility that exposure to mission temperature and pressure environments may degrade the system textiles to an extent that system performance is degraded.

2. The possibility of cold-welding of metallic components.

3. The possibility of the degradation of pyrotechnics from exposure to the combined environments.

4. The possibility of functional degradation of plastics and elastomers in the system from exposure to the thermal/vacuum environment.

5. The possibility of system degradation from penetrating radiation and meteoroids.

These problem areas have been analyzed in some detail by the Northrop Corporation Ventura Division; the results are presented in Appendix W.

All data from the Block I, Block II, and increased capability test programs that were assessable to the qualified configuration were included in the final system reliability assessment. A tabulation of the data is also contained in Reference 4.15. Design factors were included in the calculations wherever the degradation was not included in the test procedure.

The normal earth-entry flight mode after a 14-day Apollo mission was taken as the baseline for this analysis. The mission duration was extended to 99 days, and the effects of this extension were estimated in the gross failure modes and effects analysis of Table 4-14.

The results of the preliminary reliability assessment of the Apollo ELS increased capability for ELOR and the Apollo DRM are shown in Table 4-15. The total ELS system P_s was found to be 0.99993 at the 50-percent confidence level. A 10-percent strength degradation due to extended lunar orbital storage in a near vacuum was applied to all fabrics in the earth-landing system for the 90-day mission system reliability calculations. An additional level of analytical detail may be found in Appendix R and Reference 4.15.

Access to the ELS compartment would be very difficult to accomplish during the mission. For this reason, it is considered that a capability for maintenance and/or repair of the ELS components within this compartment is impractical for any mission phase after launch.

The sequence controller is accessible, being located in the crew compartment; however, because of its redundancy and protection from the space environment, it is considered reliable enough not to require maintenance and/or repair during the mission.

Table 4-14. Gross Failure Modes and Effects ELOR-ELS

System Function	Potential Failure Mode
Pyrotechnics	Failure to fire - minimized by redundant components. Premature firing - major deleterious effect in pressure cartridges. In reefing line cutters, redundant first-stage reefing lines reduce the possibility of critical early disreef.
Forward Heat Shield Mortar Assembly	Failure of parachute - some limited effect, depending on geometry of separation dynamics: heat shield could fall into the command module and cause damage to the ELS.
Drogue Parachutes	Failure of one parachute - little effect because of redundancy; however, there is a possibility of the failed chute damaging remaining functioning chute. Failure of both drogues - major effect but low probability of occurrence.
Main Parachutes	Failure of one parachute - little effect since only two functioning parachutes are required for nominal landing velocity. Failure of two or more parachutes - major effect but low probability of occurrence.
Pilot Parachutes	Same as main chute.
Sequence Controller	Failure of any one component - no effect due to complete redundancy. Failure of multiple components - possible major effects dependent upon their location.

Table 4-15. Results of Reliability Analysis

Subassembly	14-Day Mission P_s	99-Day Mission P_s
Sequence controller	0.9994	0.9994
Forward heat shield mortar assembly	0.996	0.9956
Drogue parachute mortar assembly	0.998	0.998
Pilot parachute mortar assembly	0.998	0.998
Main parachute pack assembly	0.997	0.997
Retention assembly	1.000000	1.000000
Metal riser assembly	0.9999998	0.9999998
Parachute subsystem P_s	0.99993	0.99993

Conclusions and Recommendations

It is concluded that the Apollo Block II increased capability earth-landing system (ELS) is capable of meeting the 90-day life in lunar orbit required for the ELOR mission with a P_s of 0.99993, provided the temperature (and to a lesser extent the pressure) environment within the ELS compartment is substantially the same as that specified for the present Apollo ELS.

The quiescent mode requirements for the ELS during the extended lunar orbital mission are substantially the same as for the Apollo DRM mission. The temperature environment within the ELS compartment should not depart significantly from the limits specified for the present Apollo mission. Pressures within the compartment, which are no lower than the presently specified 10^{-6} torr, would be desirable primarily because much of the available vacuum test data is in that range. Venting of the compartment should be held to the minimum practical level primarily to minimize the loss of textile finish. It is questionable that minimum temperatures below -65 F in the compartment can be tolerated. Maximum temperatures above 120 F can be

tolerated for short periods, but a higher temperature during a substantial portion of the mission would be undesirable. The required temperatures are expected to be maintained without any special design, as a result of the barbecue concept.

A temperature monitor may be desirable for the ELS compartment to alert the crew on the lunar surface in the event compartment temperature departs from the specification limits.

The following tests, analyses and developments are recommended.

1. Tests to determine the functionality of the entire ELS system after extended exposure to a thermal/vacuum environment.

2. Analysis and tests to better define the vacuum stability of landing system textiles (particularly nylon) to an extended thermal/vacuum environment.

3. Analysis of nylon finish requirements and upgrading of textile specifications to assure the use of silicone oils with the highest practical vapor pressure.

4. Tests to verify that current production methods provide a dry lubricant coating to all strands of the steel riser cables.

5. Tests to verify in-specification pyrotechnic function after a 99-day thermal/vacuum environment.

6. Analysis and tests to define the vacuum stability of pyrotechnic seals and components over an extended period of time.

7. Investigation of methods to provide redundant sealing of pyrotechnic units.

The analysis of the ability of the Apollo ELS to meet the ELOR 90-day quiescent is based on a limited amount of direct evidence and on extrapolation of these available data. To assure a safe and successful extended lunar exploration program for the 1975 period, further tests and analyses should be conducted. Facilities are available whereby the entire ELS can be subjected to an extended thermal/vacuum environment. This testing should be accomplished; then followed immediately by tests and evaluation of system functionality.

4.1 THE COMMAND MODULE SYSTEMS

LIST OF ABBREVIATIONS

EPS	Reentry Electrical Power System
ASA	Abort Sensor Assembly
IMU	Inertial Measurement Unit
CM-ECS	Environmental Control System
ECU	Environmental Control Unit
CM-G&N	Guidance and Navigation
IMU	Inertial Measurement Unit
ISS	Inertial Subsystem
CSS	Computer Subsystem
OSS	Optical Subsystem
DSKY	Display Keyboard
D&C	Display and Control (Group)
PIPA	Pulsed Integrating Pendulous Accelerometer
PSA	Power Servo Assembly
CDU	Coupling Data Unit
CGC	Command Guidance Computer
FDAI	Flight Director Attitude Indicator
AGCU	Attitude Gyro Coupling Unit
CM-SCS	Stability Control System
GA	Gyro Assembly
ECA	Electronic Control Assembly
ESS	ELOR Stabilization System
RJ/EC	Reaction Jet and Engine ON-OFF Control
GEA	Gyro Electronics Assembly
CE-3	Detector - Sun Sensor
BMAG	Body-Mounted Attitude Gyro
BME	Bench Maintenance Equipment
C&D	Communications and Data System
SME	Station Monitoring Eq't
FSK	Frequency Shift Keying
Hz	Hertz (cycles per sec); kHz kilohertz; MHz megahertz
PCM	Pulse Code Modulation
AGC	Automatic Gain Control
DRG	Digital Ranging Generator
USBE	Unified S-Band Equipment
USBS	Unified S-Band Subsystem
ASDAP	Adaptive System Data Acquisition Programmer
UDL	Up-Data Link
PMP	Premodulation Processor
CM-RCS	Reentry Reaction Control System
UDL	Up-Data Link
PSK	Pulse Shift Keying
CTE	Central Timing Equipment
STC	Stabilized Time Control
TA	Time Accumulation
TCO	Time Control Oscillator
ELS	Earth Landing System

4.2 SERVICE MODULE SYSTEMS*

4.2.1 Electrical Power Plant (EPP)

NOTE: Much of the data used herein was provided by Pratt and Whitney Aircraft (P&W) through Reference 4-13, by Allis-Chalmers Division (AC) of General Motors through Reference 4.17, or by General Electric Company through Reference 4.18.

Subsystem Description and Alternatives

The electrical power plant (EPP) for the Apollo Block II is composed of three P&W PC3A-2 fuel-cell modules (FCM) installed in the service module. They provide all the power required for all but the earth-entry and recovery operations and are, therefore, crew critical, contributing to P_s as well as P_{90}.

Because of the peculiar nature of the ELOR mission, power requirements vary drastically between the manned and unmanned phases. For this reason, one of the factors identified in the SD study was the effectiveness of using a radioisotope thermoelectric generator (RTG) for the EPP during the quiescent-state operations. Two concepts become apparent for the EPP, the one proposed by LMSC using three fuel cells and SD-proposed two fuel cells with the modified SNAP-27 RTG. Both of these concepts were analyzed in this study and the results are reflected in the following paragraphs.

Two systems are under consideration by NASA for use in the post-Apollo missions, the 2.5 kilowatt PC8B-1 produced by Pratt and Whitney and the two-kilowatt capillary matrix cell produced by Allis-Chalmers. For the Block II Apollo system, the P&W PC3A-2 will not satisfy the ELOR mission requirements because of its life limits and, therefore, is rejected from further consideration.

Although the P&W FCM was used herein for the analysis, the Allis-Chalmers system will perform equally well as demonstrated by the data in Appendix K. Additional data on the P&W cell may be found in Appendix Y. The Allis-Chalmers fuel cell will require some modification.

The general requirements and assumptions considered in the evaluation of the fuel cell system (FCS) for the extended lunar orbital missions are as follows:

1. Three-powerplant installation.

2. Unattended lunar orbit operation for 90 days.

*A foldout sheet listing abbreviations used in Section 4.2 and their meanings is located at page 199.

3. One powerplant operating during lunar orbit phase (FC concept only).

4. System power output (based on the LMSC study):

   a. 1200 watts base load with peak power capability to 2400 watts gross power.

   b. 530 watts minimum gross power.

5. Voltage regulation: 27-31 volts.

6. Powerplant endurance within voltage regulation: 2500 hours.

7. Remote restart capability.

8. Apollo Block II fuel-cell radiator.

9. Present CSM fuel-cell envirionmental specifications.

10. Normal Apollo mission to and from lunar area.

11. Crew safety or P_s of about 0.999 for system.

The power requirements during lunar-orbit operation as provided by the LMSC study are shown in Figure 4-16. In setting the configuration of the fuel-cell power-plant system to provide this power, the limitation imposed on heat rejection by the present 40-square-foot Block II radiator configuration in the environment of lunar orbit has been considered.

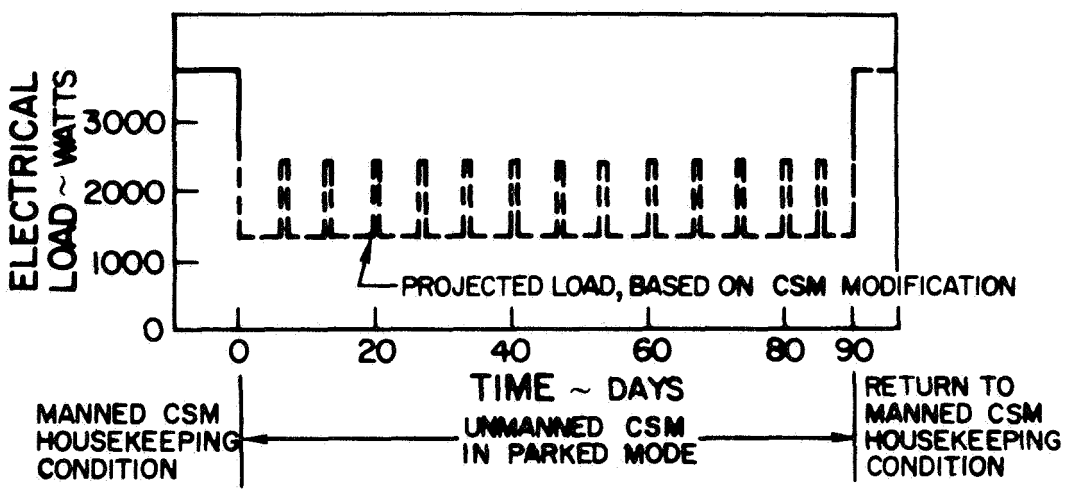

Figure 4-16. Estimated CSM Power Requirements in Lunar Orbit (LMSC Estimates)

The proposed FCM is capable of handling the full 2400-watt peak load if the coolant supplied to it is within specified temperature limits. If the load peaks are of relatively short duration as anticipated (15 minutes or less), the one EPP can accommodate the anticipated surges in coolant return temperature from the Block II radiator. For peaks of longer duration, it is necessary to supplement the fuel-cell heat-rejection capacity with a small sublimator.

The proposed P&W FCM design weighs 151 pounds; the Allis-Chalmers cell weighs 10 pounds more. P&W makes use of existing flight-qualified PC3A-2 components and offers a substantial decrease in installed weight and an improvement in operating flexibility, endurance, and reliability over the Apollo Block II EPS. A schematic of the P&W power plant is shown in Figure 4-17; the Allis-Chalmers cell is more complex.

Both cells consists of four major subsystems, the power section, water-removal function, heat-removal function, and reactant-control function. The P&W cell is described in the following paragraphs.

The power section consists of the required number of unitized electrodes and accompanying cooling plates assembled consecutively to form a single stack (Figure 4-18). The electrodes and adjacent cooling plates are held in position between end-plate assemblies by tie rods. The cells are connected in series electrically and are supplied with reactants and liquid coolant through internal parallel manifolds.

The operating power plant is self-controlling. During this period, it appears desirable to monitor performance and to have the capability of actuating one of the standby units should the operating unit malfunction. Recommended parameters to be monitored are—

1. Power plant voltage.

2. Power plant current.

3. Power section temperature.

4. Hydrogen condenser exit temperature.

All of these parameters are monitored in the present CSM fuel cell installation. Provision should be made for an alarm in case the voltage goes below 27 volts, the power section temperature exceeds 250 F, or the condenser exit temperature exceeds 180 F.

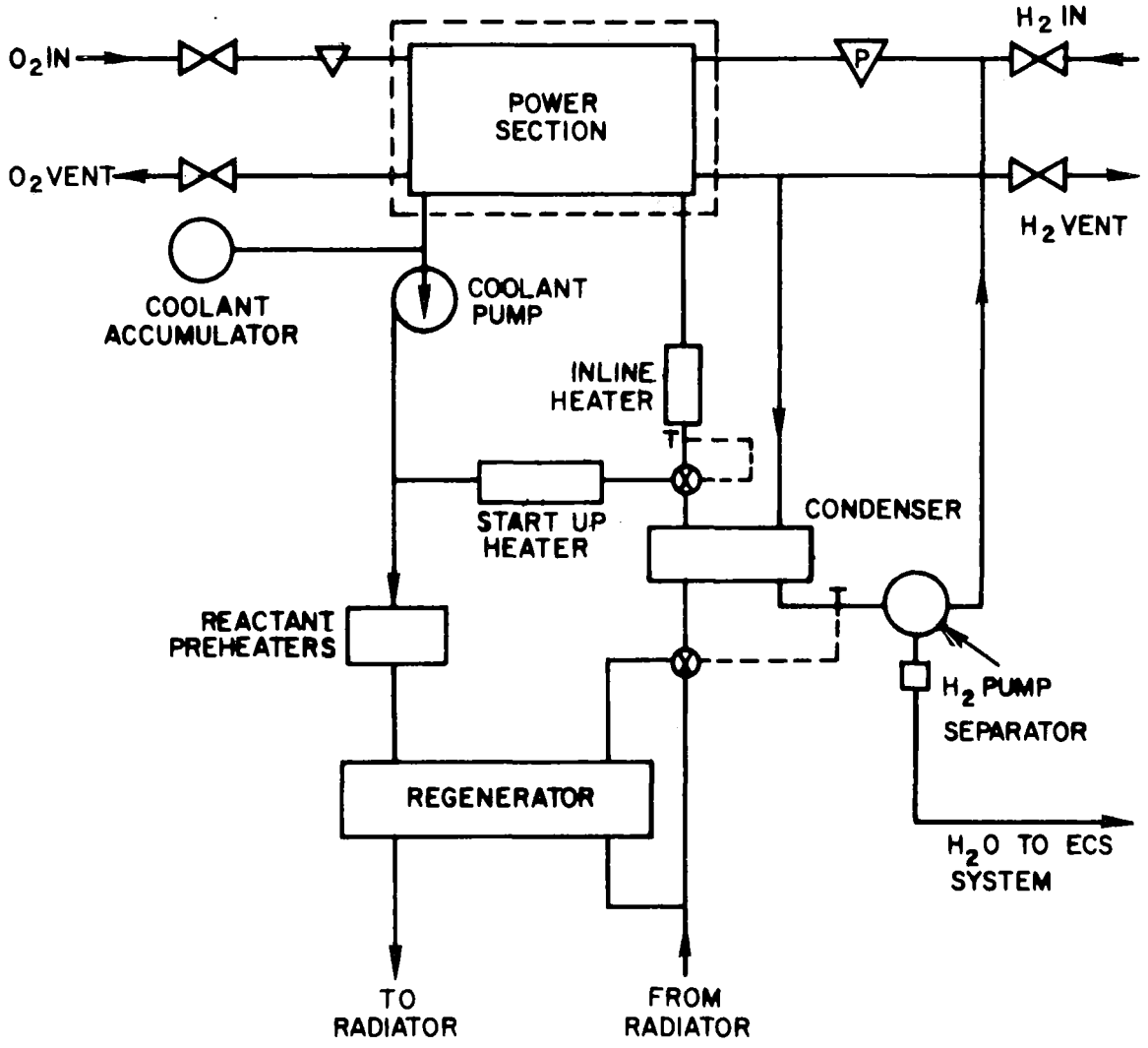

Figure 4-17. Electrical Power Plant System (EPP) Schematic With SM EPS Radiator Cooling

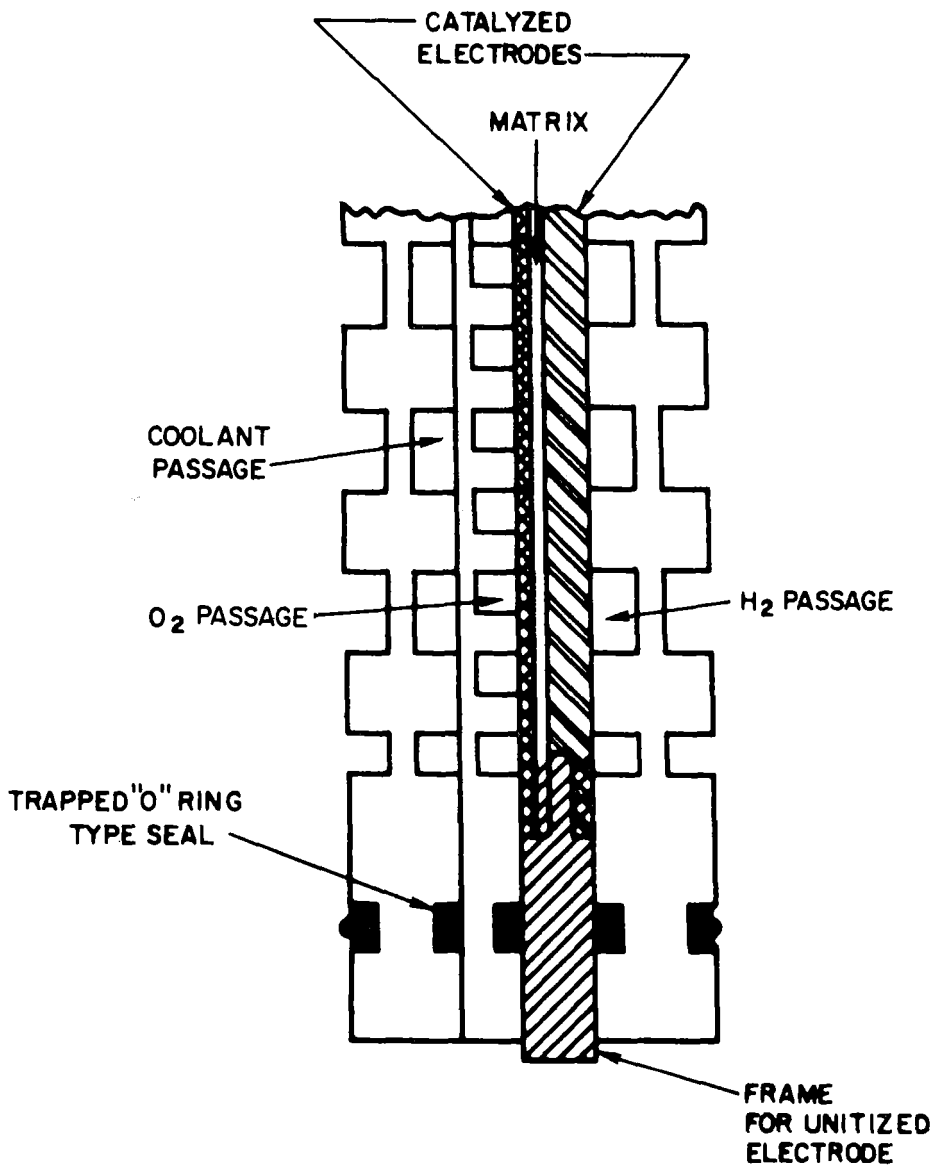

Figure 4-18. PC8B-1 Cell Schematic

Actuation of a cold standby unit is a simple process requiring no external power. The following steps are involved:

1. Turn on pumps.

2. Arm in-line heater circuit.

3. Turn on startup heaters.

4. Turn off startup heaters upon reaching operating temperature.

The power plant is now ready to be connected to the bus. During in-flight operation, a bootstrap or self-start can be performed by energizing the pumps and the startup heaters directly from the dormant power plant. Either the heatup can be completed prior to placing the power plant on the bus (as described above) or, depending on the selection of heater size, the main feed contactor can be closed after partial heatup and the heaters placed in parallel with the spacecraft load until the heating cycle is completed. The simplicity of the start cycle makes remote activation easy to accomplish and requires no special equipment beyond the four switching functions indicated.

The P&W water-removal subsystem performs as in the Apollo PC3A-2 FCM; product water is removed from the cell stack by the recirculation of hydrogen. During passage across the anode surface, a hydrogen flow in excess of the consumption rate is heated and acquires water vapor. The mixture is transported to an FC 75-cooled heat exchanger, where the vapor is condensed. The liquid water is removed by a centrifugal separator and the remaining saturated hydrogen is pumped back to the cell stack after being mixed with the supplemental hydrogen required to sustain cell reaction. Because of advantages in terms of lower, greater durability, and higher reliability, brushless d-c motors are recommended for use in driving both the hydrogen pump and the coolant pump instead of the a-c motors now in use in the PC3A-2. These motors are presently under development at P&WA.

The P&W heat-removal subsystem removes the major portion of the waste heat generated within the cell stack is by circulation of a liquid coolant (FC 75) through the cell stack. The coolant is supplied to the stack at a controlled temperature level, heated during passage through the cells, cooled at an external heat sink, and pumped back to the cell stack is maintained by a control valve, which regulates the rate of heat-sink bypass flow. A lesser portion of the waste heat is also removed from the cells by the recirculated hydrogen flow in the water-removal subsystem, but this heat is rejected to

the FC 75 loop within the power plant. The Allis-Chalmers approach is more complex, using helium as a second heat transfer medium.

The data indicate that FC 75 coolant is compatible with the service module Block II radiator in all operating thermal environments. Although the specific heat of FC 75 is considerably less than that of aqueous ethylene glycol, the greater FC 75 circulation rate required for proper power-plant control results in a turbulent flow condition in the radiator passages and a consequent increase in heat transfer above that obtained with the laminar flow of water-glycol. In addition, FC 75 exhibits a low viscosity at reduced temperatures, which is a favorable characteristic for operation at low radiator return temperature condition experienced during the quiescent phase. See Appendix X for a supplemental cooling system used if batteries are not used in the peak-load cycles of the CSM quiescent mode.

The reactant-control subsystem provides the power plant with reactant gases conditioned to proper temperature and pressure levels. Oxygen and hydrogen gases are supplied from an external supply to the power plant preheaters, where they are temperature-conditioned. In turn, they pass to the cells through demand-type regulators that maintain a fixed operating pressure. The circulation system carries the reactant hydrogen to the hydrogen electrodes.

Solenoid-operated vent valves are provided for periodic venting of accumulated impurities in the system. The present Apollo purge schedule is satisfactory for the ELOR. A timer circuit will control automatic purging during the quiescent mode.

Operation, Monitoring, and Control

During the unmanned period in lunar orbit, two of the three power plants are shut down on a cold standby condition. Shutdown is a simple operation involving only the following steps:

1. Open main feed contactor.

2. Disarm inline heater circuit.

3. Turn off pumps.

These steps may be performed by the astronauts before they leave the command module. The units on cold standby require no monitoring, environmental control, or maintenance provided all water is removed.

Bootstrap, or self-start, capability has been well established from power-plant development test experience to date. The time required to reach operating temperature is in the range of 10 to 30 minutes depending on the heater size. The desirable approach is to use a high-energy heater to perform a rapid off-line start, but other operational considerations such as environment temperature and the possibility of placing the heater in parallel with the bus load would affect the final selection. The total energy required from the fuel cell during an in-flight start is less 0.3 kilowatt-hours. A typical start accomplished during sea-level testing of a P&W PC8B-1 FCM is indicated in Figure 4-19. In this case, the heatup phase was completed prior to placing the power plant on load.

Weight and performance data for the P&W PC8B may be found in Appendix Y; for the Allis-Chalmers cell, these data may be found in Appendix K.

EPP Systems Analysis

Selection of an EPP for the ELOR mission depends on two factors, its ability to (1) meet the manned-phase requirements (the Apollo mission) and survive the dormant cycle and (2) provide the minimal power requirements for quiescent-phase operation. The Allis-Chalmers or P&W fuel cells will meet the functional requirements imposed by the manned phases of the mission as well as the reliability goals demonstrated for Apollo; therefore, no further consideration of these phases is required.

The LMSC study indicated that about 1200 watts of average power and up to 2400 watts of peak power may be required for the CSM quiescent phase; however the results of this study indicate that these requirements may be much too pessimistic and that the actual requirements could be reduced to 124 watts average and 191 at the peak periods. A breakdown of these requirements is given in Tables 3-1 and 3-2. Much of the saving comes from use of waste heat for heating requirements rather than electrical power. It is recognized that a more detailed study is required to verify these estimates. It is, however, evident that a decision cannot be made without resolving these differences.

Since there is a wide divergence in potential requirements, two system concepts are presented herein for the quiescent phase: the single fuel cell and the dual radioisotope thermoelectric electric (RTG) system (2-SNAP-27 derivative).

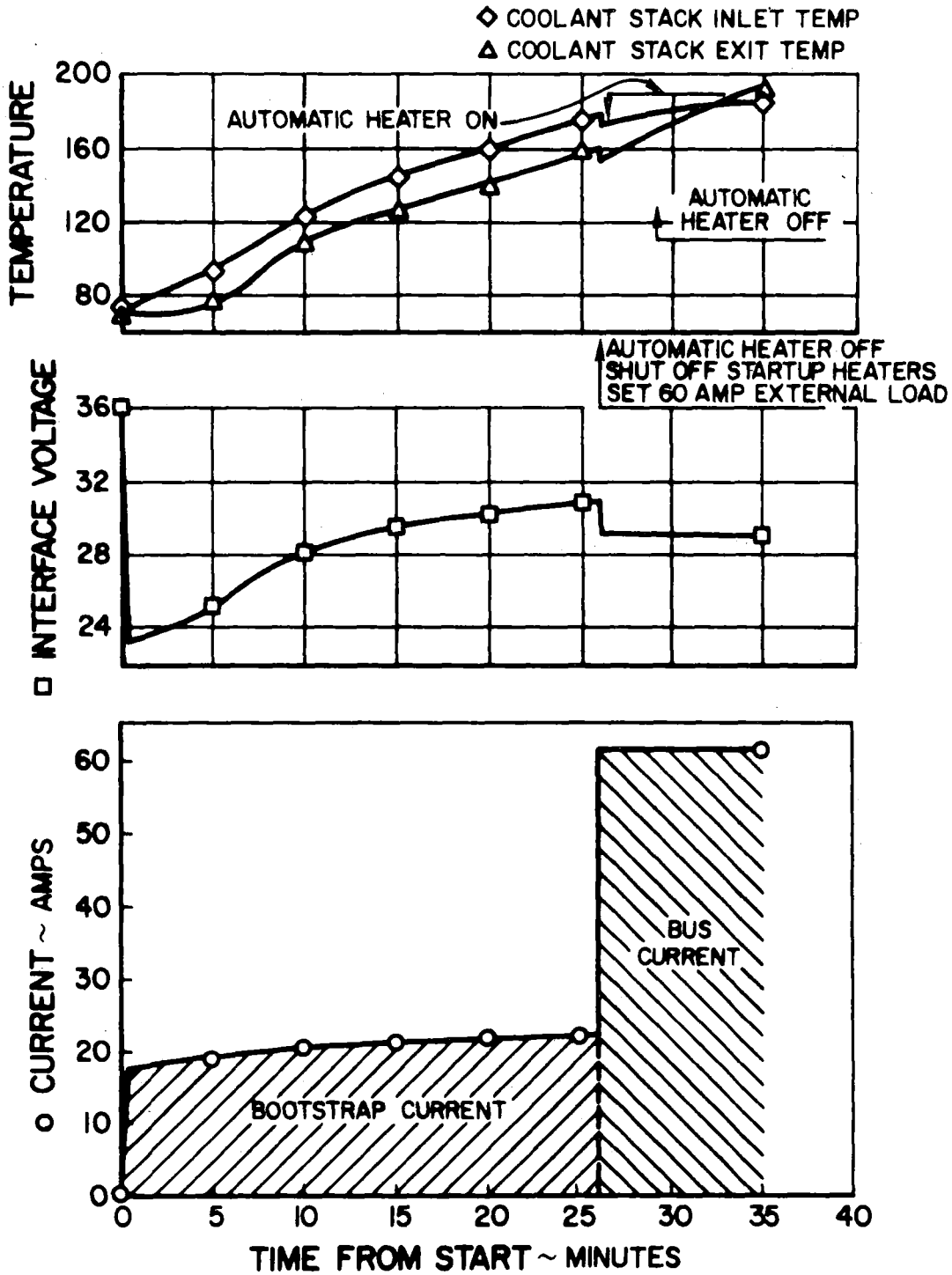

Figure 4-19. Bootstrap Start Data for PC8B-1 Power Plant

The Single FCM for the quiescent modes could use either the P&W or Allis-Chalmers cell. A reliability and maintenance analysis of the Allis-Chalmers cell is provided in depth along with its differences from the P&W cell.

When a fuel-cell system (FCS) is in the standby mode, the thermal loop must be active. During hot standby all the components of the thermal loop and the heating controller will be active. Except for extreme ambient temperature variations, the heaters will be cycling on and off to maintain temperature, and the coolant valve will remain closed. When a fuel-cell module (FCM) is in the cold-standby mode (the recommended quiescent mode), the water/glycol solution in the thermal loop must be kept from freezing. This necessity may require that the coolant pumps to be on and the coolant solenoid valve open.

The coolant pump is the most critical component of the thermal loop; therefore, each FCM has two coolant pumps. Either pump has sufficient capacity to maintain the necessary coolant flow for the desired standby and operational FCM temperature.

The remaining components in the thermal loop plus the heating control electronics have a failure rate of about 6.4 failures per million hours. The estimated failure rates for the fuel-cell systems are presented in Appendix L and form the basis of the subsequent analysis.

The 90-day P_s of the FCS with the presently configured FCM's (redundant fans for the Allis-Chalmers system and redundant coolant pumps) is 0.9994. This figure is the probability that at least one of the three FCM's will be operable at the end of the 90-day lunar surface mission and will complete the return trip. If two FCM failures should occur, a repair must be made or provisions for a fourth or return-home FCM should be made to enhance crew safety. The P&W cell is more reliable, over (0.9996) because of the lack of fans and the helium heat-transfer medium.

Since reliability of both systems exceeds the goal of 0.999, it is not required that any spare parts be carried; however, it is possible with some redesign to provide the capability to replace some components of the Allis-Chalmers cell. This added capability increases the availability of one of the three FCM's for the return trip to 0.99998 and decreases the chances of abort.

For a lunar orbit FCS consisting of two FCM's (a total of three including a return home FCM), configuration is the minimum requirement; i.e., one operating FCM and one hot-standby FCM. The 90-day reliability

of this FCS with the presently configured FCM's is 0.994 for the Allis-Chalmers cell. If the Allis-Chalmers FCM is redesigned to provide minimum redundancy, the P_s contribution increases to about 0.999. Mission abort is assumed to occur should two FCM's fail.

To assure the availability of a second FCM for the return trip, the cell control assembly (EMCA) could be redesigned for in-space maintenance, and a spare should be carried for replacement. The probability that at least one of the two FCM's, less the EMCA, is operable at the end of 90 days is about 0.999.

This value means that the availability of a second FCM for the return trip home is the same when either redundant redesigned EMCA's/FCM are employed or a spare redesigned EMCA is carried for EVA maintenance. The advantage of the former is the increased probability of lunar orbit mission success. The advantage of the latter is less electronics (three removable EMCA's versus four built-in EMCA's) and probably less redesign.

The most critical components are listed in order of unreliability in Table 4-16.

Table 4-16. Fuel Cell Assembly Relative Unreliability (Allis-Chalmers Data)

Component	Relative Unreliability
Fans	30* (Allis-Chalmers cell only)
EMCA	29
PC	15
WCC	10
Others	4
WRA	5.5
WRV	3*
PT	2.5
Others	
Coolant Pump	

*A redundant fan and a redundant coolant pump are in the present Allis-Chalmers FCM. Two water-removal valves are used; these are redundant for fail-closed, but in series for fail-open having a failure rate approximately equal to a single valve.

The EMCA is the most critical component with a reliability of about 0.94; however, it can be considered for ISM. The other components have been excluded from ISM because of their relatively low failure rate, the difficulty of ISM for fluid lines, and the extent of redesign required. One spare EMCA will provide a contribution to P_s of about 0.998 for the FCM; one more (2 spares) increases P_s to about 0.99998. The spares are only useful after the crew return to the orbiting CSM, but they will permit compromise of the Apollo abort criteria. Under these conditions, two fuel cells can fail before abort is required. Actually, the FCM's seldom fail completely so that there is usually more than ample time to take compensating action.

To determine FCS status, certain data are required by the MSFN so that a new module may be remotely started and the faulty one may be shut down. This action is repeated if other modules fail until only one module remains operable, and the mission is immediately aborted. Diagnostic procedures will then be undertaken after the crew boards the CSM.

It is required to remotely determine when the module has degraded or is about to go beyond predetermined limits. The following quantities will be monitored remotely on the lunar surface:

1. module current.
2. bus voltage.
3. module temperature.
4. reactants pressure.
5. water vapor pressure.
6. *canister pressure.
7. *reactants over pressure.

The following controls are required to remotely start up and shut down the modules:

1. Standby module "on" (1 per module).
2. Module "off" (1 per module).
3. Purge (1).

(*)These are also required if the EMCA is designed for ISM.

The fuel-cell module elements will be energized by a switching device initiated by the "module on" command, which will be designed as a part of the EMCA.

The radioisotope thermoelectric generator, as described in detail in Section 4.4.2, is a modified SNAP-27. Its reliability without repair exceeds 0.9999 and will not require any maintenance. It is already qualified for the Apollo program. Two SNAP-27's, which will provide the SD-estimated average power required, together weigh only 85.4 pounds, about 1/2 the weight of one fuel-cell module, and this includes the fuel of the whole mission. When installed as recommended, adequate shielding exists to assure no contamination of the crew. Use of this concept is expected to save over 6,000 pounds and reduce the SM modifications required by a substantial amount. Its reliability is the system contribution to P_{90} since the RTG's provide all CSM electrical power for the quiescent phase.

Conclusions and Recommendations

Either fuel-cell system will meet the basic ELOR requirements; however, the data indicate that the P&W cell is somewhat more reliable than the Allis-Chalmers version; about 0.9996 versus 0.9994 for the system P_s. The Allis-Chalmers cell is slightly more complex in the heat transfer approach; however, it may be maintainable. It requires some modification, whereas the PC8 does not. In any event, the Apollo II cells must be replaced with one or the other.

If the SD power profile estimates are verified, it is recommended that one fuel-cell module be eliminated and a dual SNAP-27 designed with a heat exchanger similar to that recommended for the LM in Paragraph 4.4.2 be installed in the CM. This approach virtually limits the CSM modifications to those required to install the RTG system and actually reduces the CSM injected weight to less than that for Apollo II. Further, it virtually guarantees no loss of power during CSM quiescence.

4.2.2 Reaction Control Subsystem (SM-RCS)

NOTE: Much of the information used herein was provided by the Marquardt Corporation through Reference 4.19, 4.20, and 4.21.

The SM-RCS for ELOR is to be identical with that used in the Apollo Block II, except for the use of an aluminized bladder in the positive expulsion tanks to prevent helium migration.

NOTE: Addition of both fuel and pressurant totaling about 145 pounds in required for the all fuel cell concept.

The RCS heaters recommended by LMSC are already a part of the Block II design. As for the engines themselves, there are four self-contained engine quads, each completely independent from the others. A schematic of one quad is presented in Figure 4-20.

The SM-RCS performs several functions for the ELOR mission, it must provide attitude and stability control as for the Apollo mission; and, during the storage mode, they must spin and despin the CSM around the roll axis. In addition, it is required to damp out any axis wobble while maintaining the roll axis perpendicular to the sun's rays.

The system operates the same as for the Apollo mission, except for the quad heaters. If they are used, they would either be used continuously or be controlled by a thermostat. As a third alternative, they need only be turned on just prior to RCS usage. Marquardt and SD data indicate that freezing will not occur if the vehicle and engines are moving with respect to the sun such that all the engines are warmed by the sun or by engine operation every few hours.

The aluminized bladder should prevent potential helium migration; however, Bell Aerosystem tests have shown that the presence of helium in the fuel or oxidizer will not adversely affect engine operation (see Reference 4.22). Additional helium is recommended to assure adequate pressurant and to offset the effects of any potential leakage and/or migration particularly for the all-FC concept.

System Analysis

The SM-RCS may be analyzed in terms of its major constituents. Each quad is made up of fuel supply, helium supply, engines, and management elements, which are analyzed separately in the following paragraphs.

The fuel tanks are of the positive-expulsion design as shown in Figure 4-21. A functional diagram and description is presented in Figure 4-22.

As presently configured, the positive-expulsion tank (bladder type) is loaded and pressurized (suppression pressure) prior to launch. Depending upon tank application the pressure may be increased to its operating level either prior to or subsequent to launch. From this point, the pressure remains constant, permitting positive propellant expulsion on demand. Pulse-type flow is the normal requirement and is effected by operating a valve in the reaction-control thrust-chamber subsystem. Apollo mission

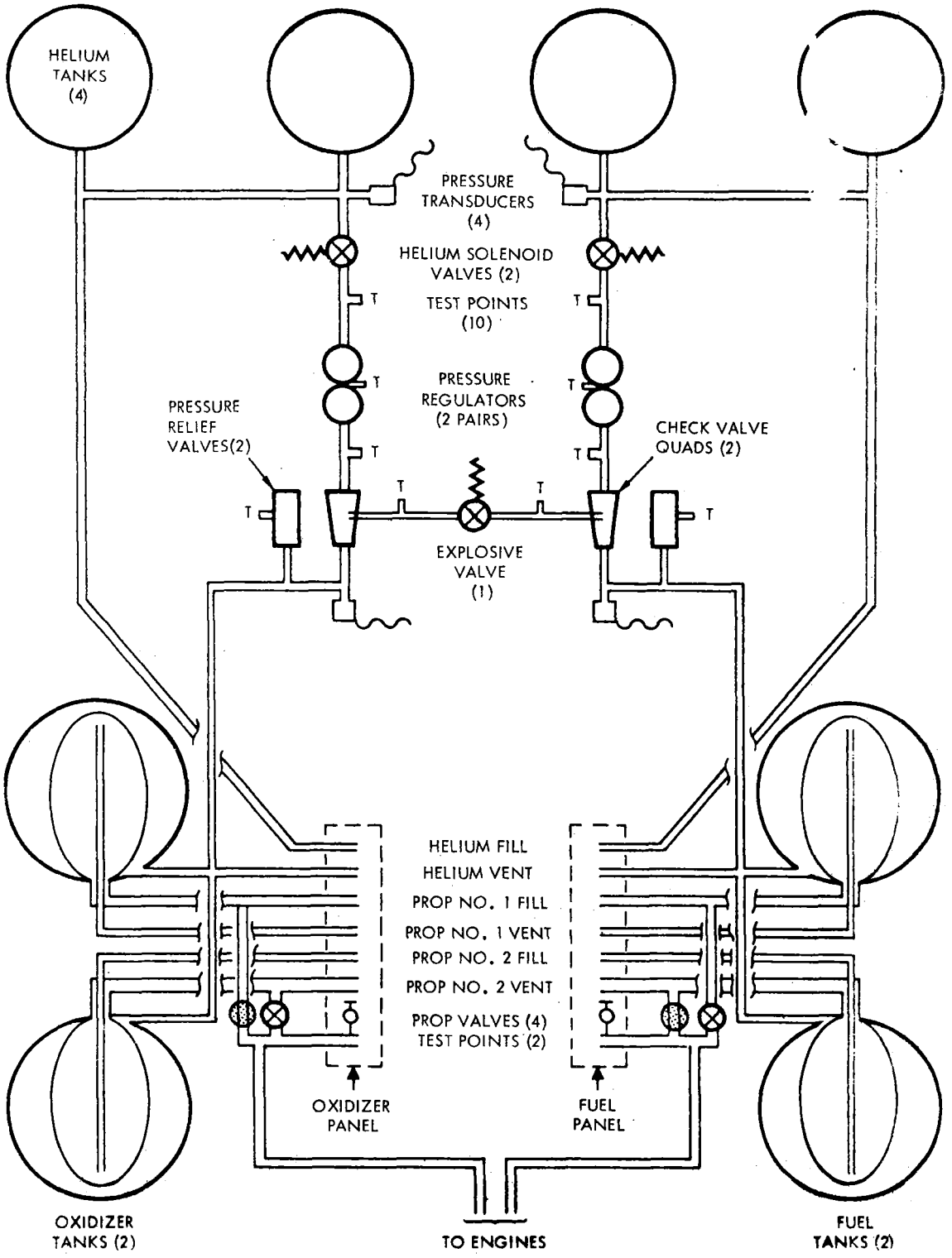

Figure 4-20. Reaction Control System Schematic, Service Module (SM-RCS)

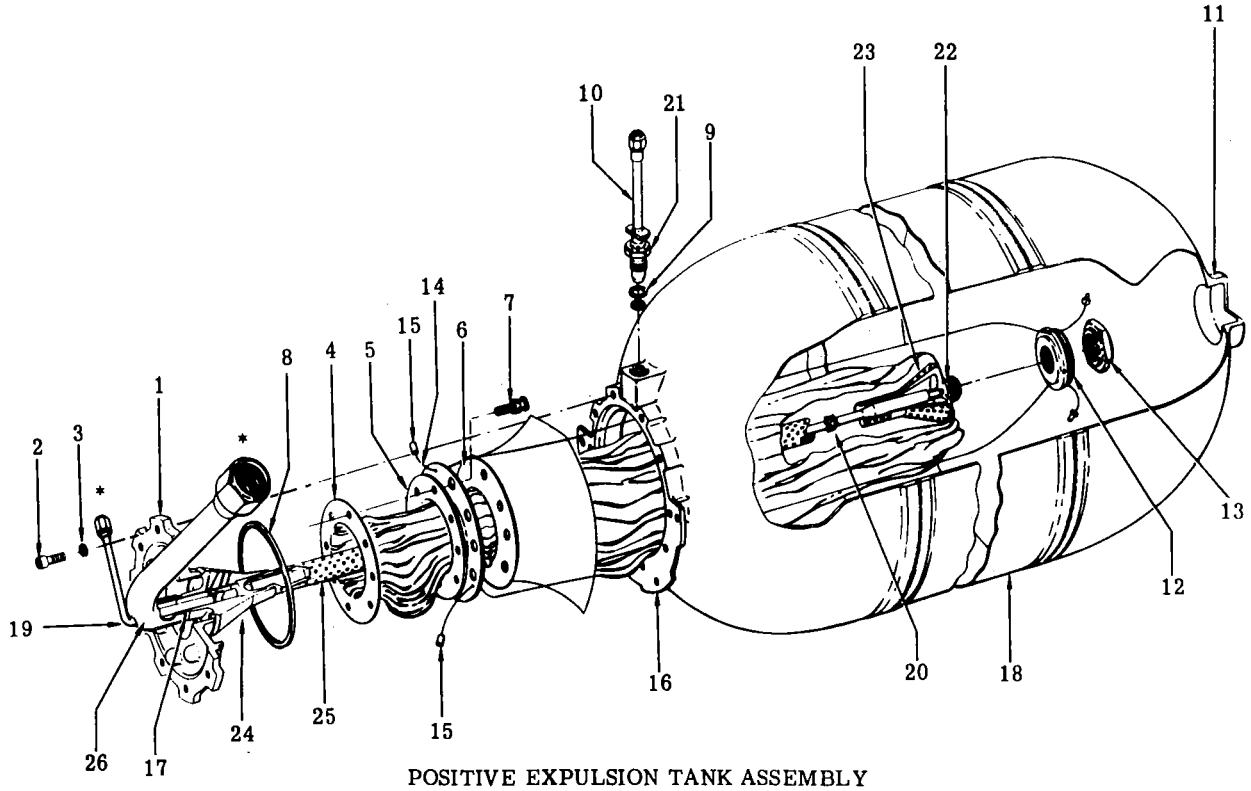

POSITIVE EXPULSION TANK ASSEMBLY

1. Diffuser Assy.
   Fuel 8339-471053-3 *nut cut off
   Ox. 8339-471054-3 predelivery
2. Bolt 8271-471019-1
3. Washer AN 960-C416L
4. Bladder
   Fuel 8339-471080-1
   Ox. 8339-471080-3
5. Ring 8271-471117-1
6. Pad 8271-471249-1
7. Bolt 8271-471114-1
8. Gasket 8271-471025-1
9. Gasket 4G2-4 (Test Only)
10. Gas Inlet Fitting (Test Only) 8339-471026-1
11. Boss End of Tank Assy.
12. Washer Assy. 8271-471144-1
13. Nut 8271-471021-3
14. Vent Line Assy.
    Fuel 8339-471027-1
    Ox. 8339-471027-3
15. Eyelet 8271-471141-1
16. Mounting Flange
17. Bimetal Joint (6061 Al.Al. to 347 St.St.)
18. Tank Shell Assy. (T16AL-4V Titanium)
    Fuel 8339-471110-1
    Ox. 8339-471110-3
19. Bleed Tube Assy.
    Fuel 8339-471059-9 * nut cut off
    Ox. 8339-471059-11 prior to delivery
20. Bleed Tube Spacer
    8339-471058-1
21. Nut 8271-471049-1 (Test Only)
22. Retainer End of Diffuser Assy.
    (Ret. Assy. 8339-471057-1)
23. Retainer Cone 8339-471057-5
24. "Outlet End" Cone 8339-471034-1
25. Diffuser Tube 8339-471036 (-1 Fuel; -3 Ox)
26. Elbow (Outlet) Tube W/O Nut & Sleeve 8339-471031-7

Figure 4-21. Positive Expulsion Tank Assembly

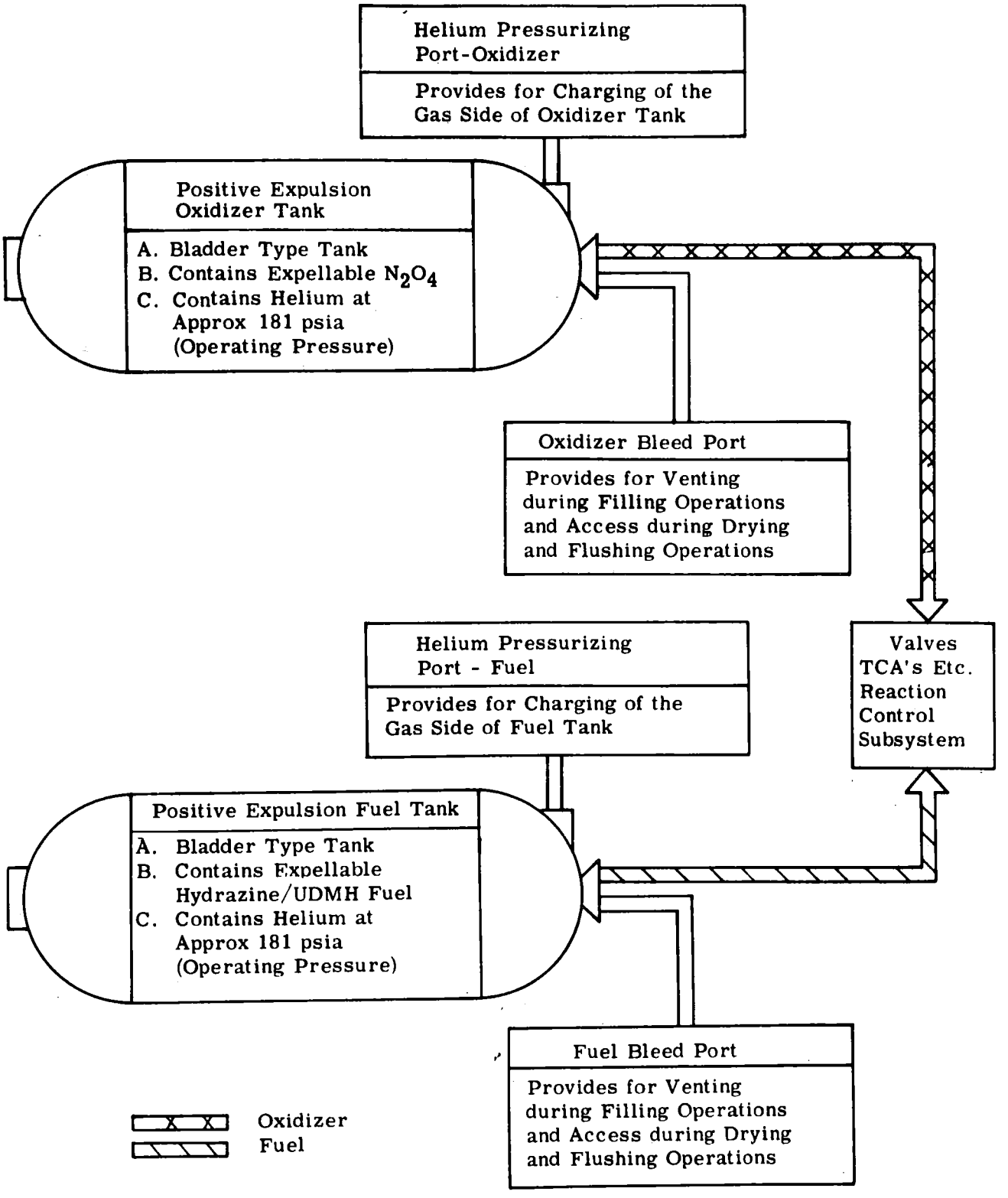

Figure 4-22. Positive Expulsion Tankage Functional Block Diagram

requirements include the tank assembly capability to perform satisfactorily for one cycle; i. e., a propellant-loading ullage draining and complete expulsion to full bladder ΔP. Although the Apollo spacecraft contains six different (slightly) configurations of the positive expulsion tank concept, their basic design is the same.

A reliability analysis of the tank indicates that the bladder is the only component that has any significant effect on the estimated value. The failure rates for the tank and diffuser assembly fallout are insignificant in arriving at the tank assembly reliability; therefore, tank assembly reliability is primarily a function of the bladder failure hazard; and it has been demonstrated that, given a satisfactory leakage check and propellant loading, a successful full expulsion (pulsed or continuous) can be effected with a P_s of 0.998 at 90-percent confidence for each tank.

Since the major failure mode was helium migration, and this has been eliminated through use of the aluminized bladder, the reliability is known to be much higher, probably greater than 0.99999. Test data seem to be verifying this position. Maintenance or repair of any kind is considered impractical and unnecessary for these tanks. The only possibility is to replace the quad as a unit, which is considered unnecessary.

The helium supply provides the pressurant for the fuel system, both fuel and oxidizer. There are two tanks for RCS quad with redundant plumbing. The Apollo design will provide a subsystem of P_s better than 0.9998 for ELOR without any changes. Details are similar to those for SM propulsion. A redundant tank and common manifold to all quads would exceed 0.99999.

The RCS engines, the R-4D as presently used for Apollo and other space programs, are considered adequate without change. NASA and Marquardt data indicate that the engine exceeds the life requirement by a substantial margin. As indicated in Figure 4-23, actual test data indicate that the reliability for the engine and resulting P_s will be between 0.999 and 0.99999; therefore, the probability of losing control of one axis is less than 1×10^{-6} because of the redundant quad design.

From the referenced data, it is known that the burn-life and structural capabilities of the R-4D Engine were much greater than the requirements for a given application; i. e., large margins of safety so that engine reliability is a function of the required number of ignitions. The predominant failure mode then becomes the failure of a valve to open or close, For the R-4D valve design, no assessable failures have been experienced in the extremely large number of tests encompassing more than two million engine firings and more than 50 million valve cycles (Reference 4.20). The resulting

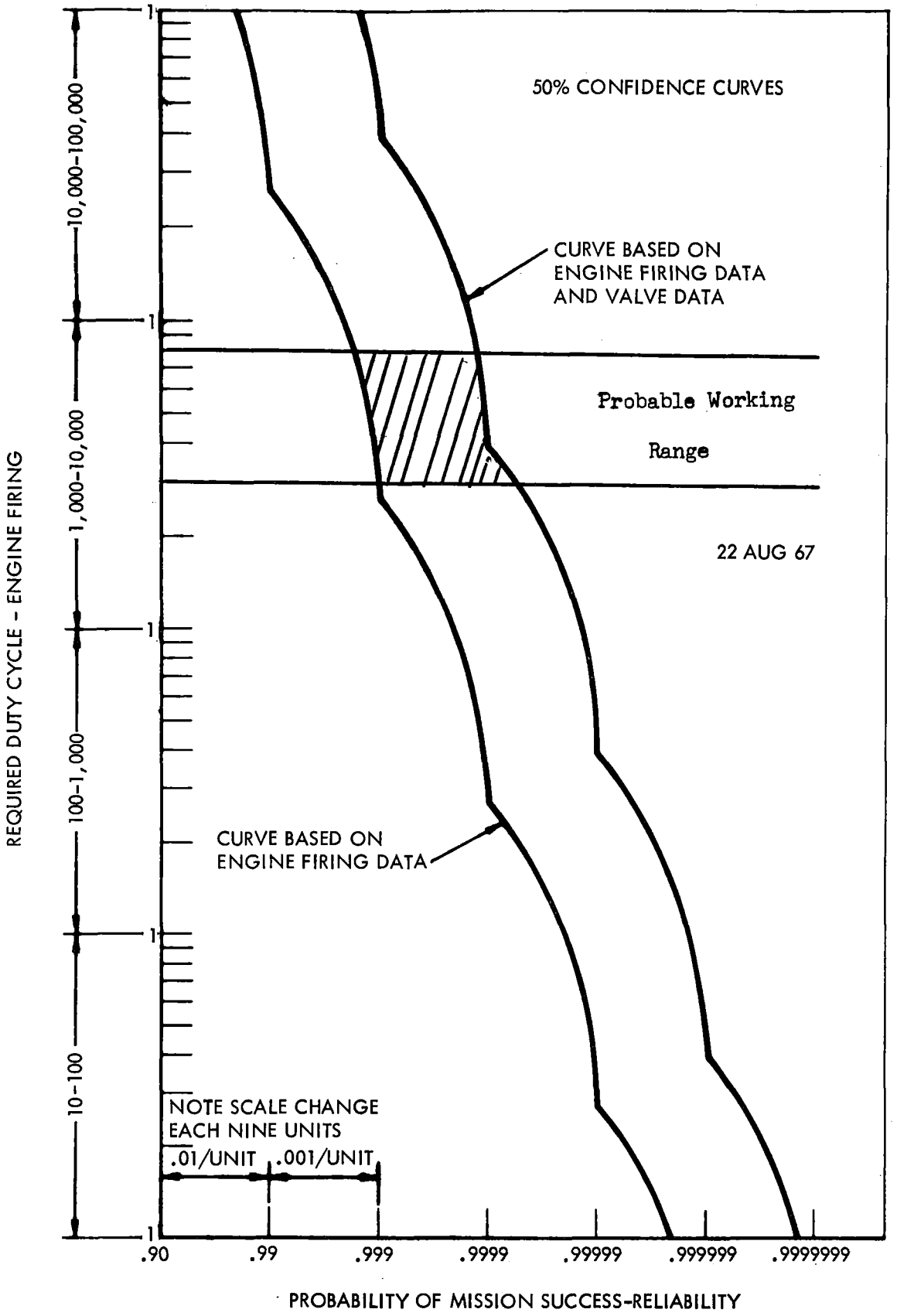

Figure 4-23. Reaction Control Engine Reliability as a Function of Usage

engine reliability is presented in Figure 4-23 as a function of the required duty cycle and number of ignitions. The curve based on engine firings plus valve cycle tests should more accurately predict engine-reliability. The unusual bumps result from use of six scale changes on the reliability abscissa; one change was made for each nine units to enhance the accuracy in reading the reliability numbers. From the upper curve, the engine reliability is as expressed in Table 4-17.

Three factors affect engine life and the resulting mission reliability and safety; these are burn-time, space storage, and number of ignitions.

The predicted burn-time limit of the molybdenum/molybdenum disilicide-coated combustion chamber and the critical burn-life-limiting component of the engine is a function of maximum chamber temperature. The R-4D Engine operates at a maximum chamber temperature of 2,000 F. The predicted chamber life is in excess of 1,500 hours of cumulative usage; no application or margin test proposed to date would utilize even a small fraction of the engine's lifetime capability. This capability has been demonstrated by the supplier.

The number of ignitions can also have a deleterious effect on engine life; this is normally created by the occasional rough start; however, since the beginning of the development program, there has never been a failure of any type in 1.5 million firings. This is not considered a failure hazard since the recorded number of successful firings is far in excess of any mission requirements.

Table 4-17. Engine Reliability for Discrete Duty Cycles

Required Duty Cycle or Number of Ignitions	Demonstrated or Achieved Engine Reliability (50-Percent Confidence)
1,000	0.99998
5,000	0.9999
10,000	0.9998
50,000	0.999
100,000	0.998

Deep-space storage capability was one of the important design criteria for the engine. Materials and clamping loads in the hardware have all been selected to provide no degradation from any known stress over long periods of storage, with or without engine firings. Space storage capability on the order of one year has been demonstrated on the lunar orbiter flights. During the past program, the engines demonstrated zero valve leakage in extended space exposure, as well as no ill effects due to the complete space environment (hard vacuum, micrometeorites, or solar radiation).

During long-duration missions with intermittent engine operation and long off-times, it is possible to freeze propellants in the lines leading to the engines. This condition may be prevented if the lines are mounted in a plane with respect to the sun so that all of the engines are warmed by the sun, or by intermittent engine operation every few hours. Fuel freezing in the lines may be avoided by using an electrical heater that is mounted on the engine injector head. The heaters can be used as follows:

1. During long engine-off periods, the propellants can be allowed to freeze in the lines. The heater is then turned on prior to engine use to thaw the propellant (applicable to LM engine only).

2. The heater can be left on continuously.

3. Thermostats can regulate the head temperature.

The ELOR concept for the CSM will preclude the need for quad heaters. Barbecuing the CSM will prevent the fuel lines from freezing because of the adsorbed heat (its outer coating adsorbs heat). The engines are unaffected by the presence of dissolved helium pressurant in the propellant. Variations in propellant supply pressure and voltages have only a second-order effect on engine performance.

The high reliability of the engine plus the redundancy obtained from having a number of engines capable of performing the same control functions in the four engine quads eliminates the need for replacement parts or repair of an engine during a mission; yet in-flight maintenance possibilities based on the most likely failure modes are considered possible for the engine alone.

Calculating the reliability of an RCS quad, using available test data as a lower boundary estimator and the mathematical model of Figure 4-24, the quad P_s is expected to exceed 0.9966 each. The probability of any three of the four working exceeds 0.9999 and of any two of the four working exceeds 0.999999.

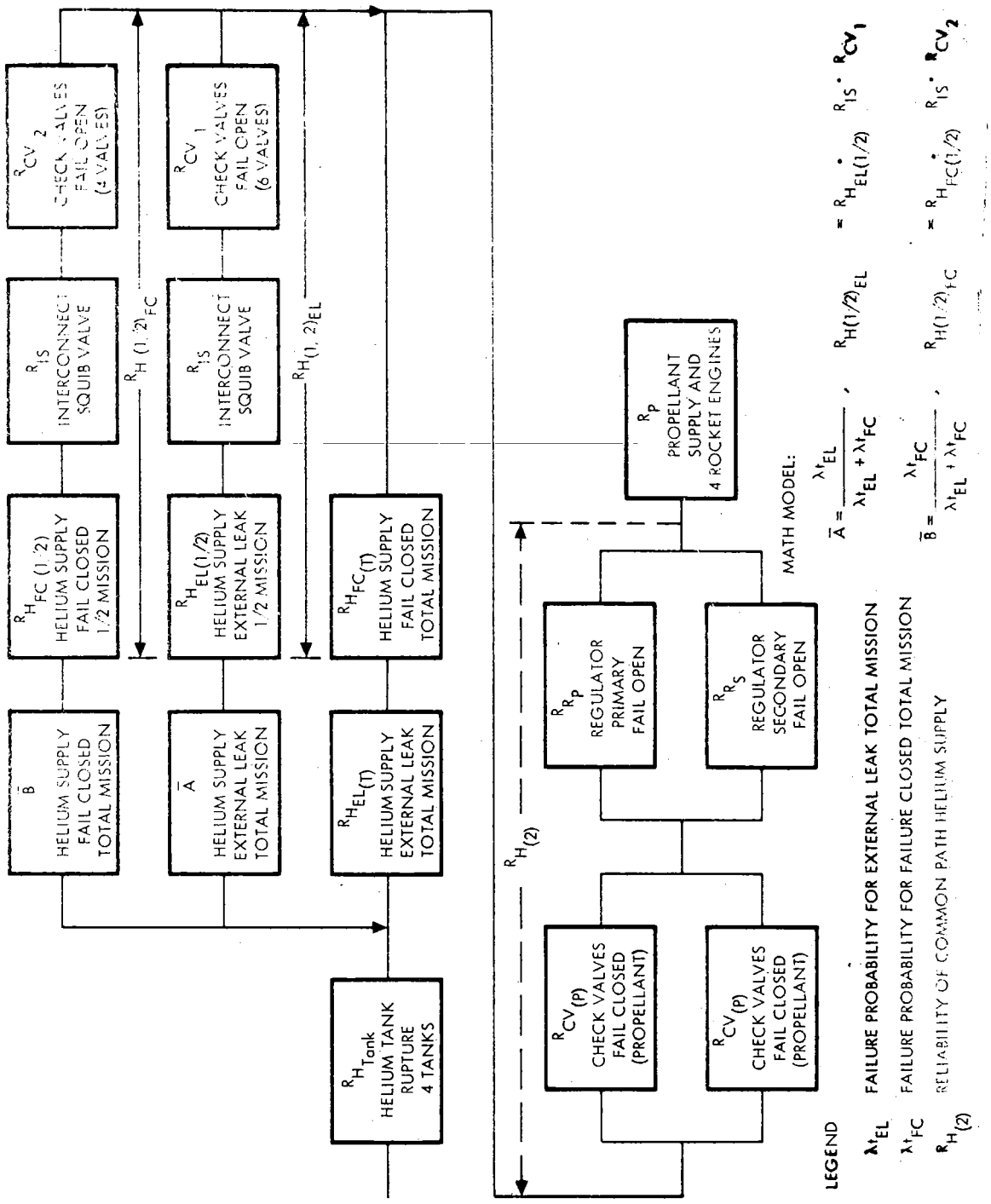

Figure 4-24. Service Module Reaction Control Quad Reliability Logic

4.2.3 Main Propulsion Subsystem

NOTE: Much of the information used in this section was provided by the Aerojet General Corporation through References 4.23 and 4.24.

Functional Description

The main CSM propulsion engine is to be the Apollo service module engine. The Block II system will remain unchanged, except for the fuel and oxidizer storage tanks, which may be increased in size to accommodate the increased fuel/oxidizer storage requirements projected by LMSC. This change involves the addition of 4.7 inches in length and an elliptical head. The existing structure will support the tanks with little change (Figure 3-3).

The main requirements of the engine are to provide the necessary thrust for midcourse correction during the translunar phase, trajectory correction during the approach, lunar orbit capture, transearth injection, midcourse correction during the transearth phase, and retrofiring for earth approach and reentry. The total engine firing required for the complete mission is an average of nine cycles for a maximum total duration of 600 seconds, slightly more than that for Apollo, because of the larger payload.

The subsystem schematic is given in Figure 4-25 along with a list of functioning components.

Engine System Analysis

Reliability logic diagrams are presented in Figure 4-26 for engine start and steady-state operations. Engine shutdown operations and coast periods are given in Figure 4-27. Associated with each component or assembly identified in Figures 4-26 and 4-27 are all of the various parts associated with its construction. The bipropellant valve has been separated into four valve assemblies, each consisting of an actuator and the associated pair of ball valves (one for fuel and the other for oxidizer), shafts, seals, springs, housing, and other related parts. The gimbal actuators for pitch and yaw are considered separately. In each actuator, the redundant motor-clutch assemblies are individually identified. There are redundant electrical harnesses.

The reliability logic diagrams shown in Figures 4-26 and 4-27 provide a reasonably rigorous basis for calculating the engine reliabilities. A more detailed set of logic diagrams for the lunar mission are presented in Reference 4.23.

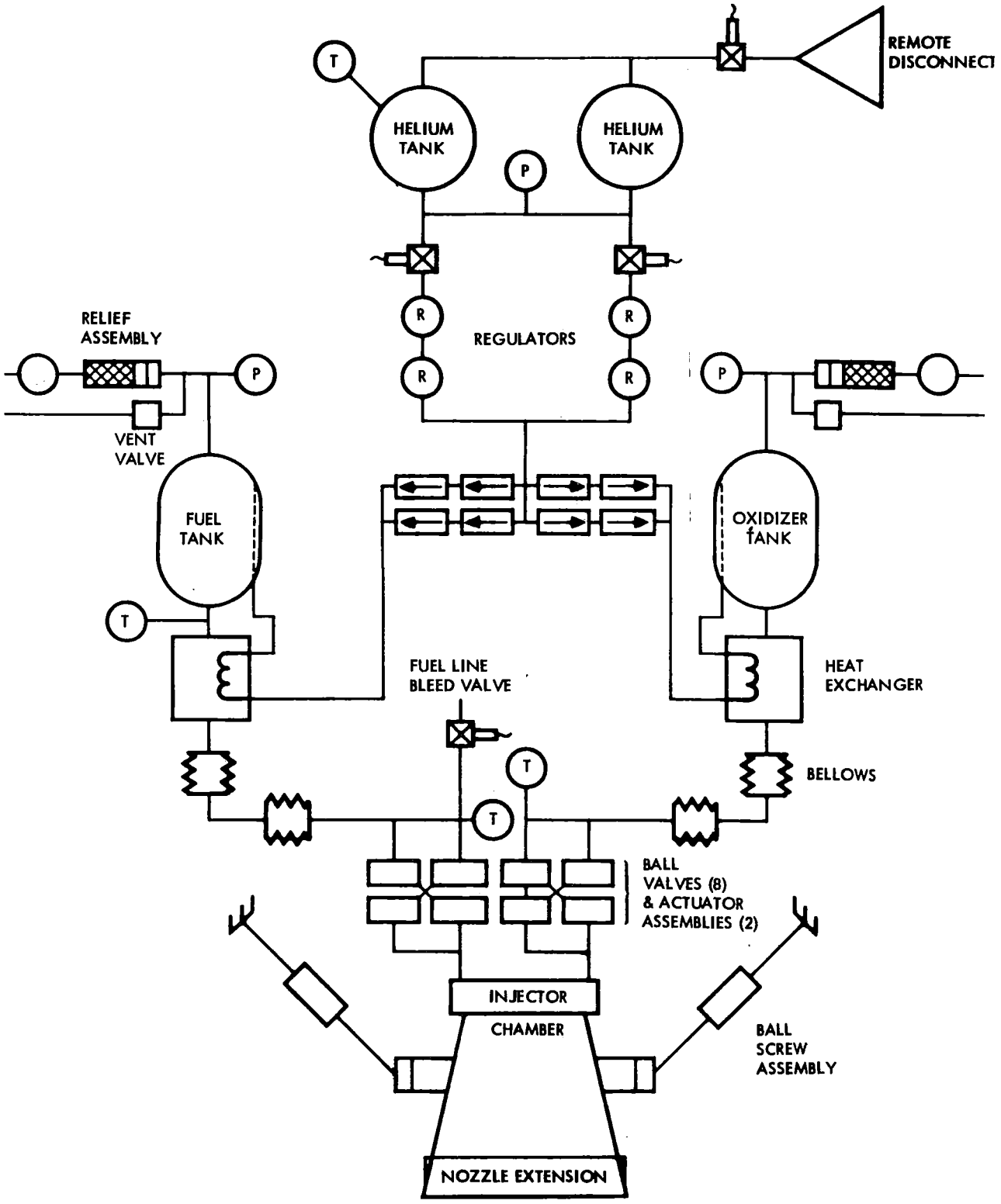

Figure 4-25. Command/Service Module Propulsion System Schematic

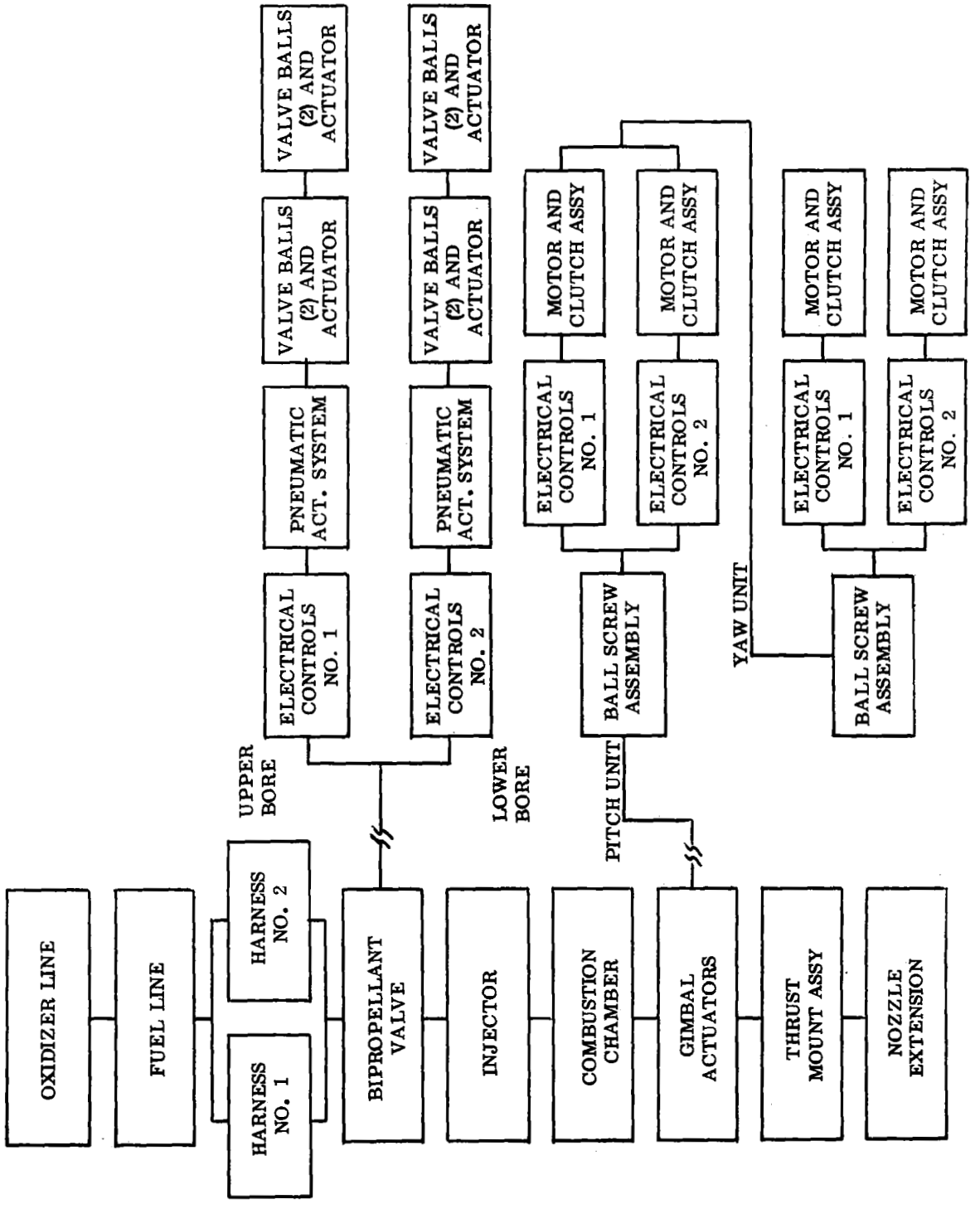

Figure 4-26. Reliability Logic Diagram for Engine Start and Steady-State Operations

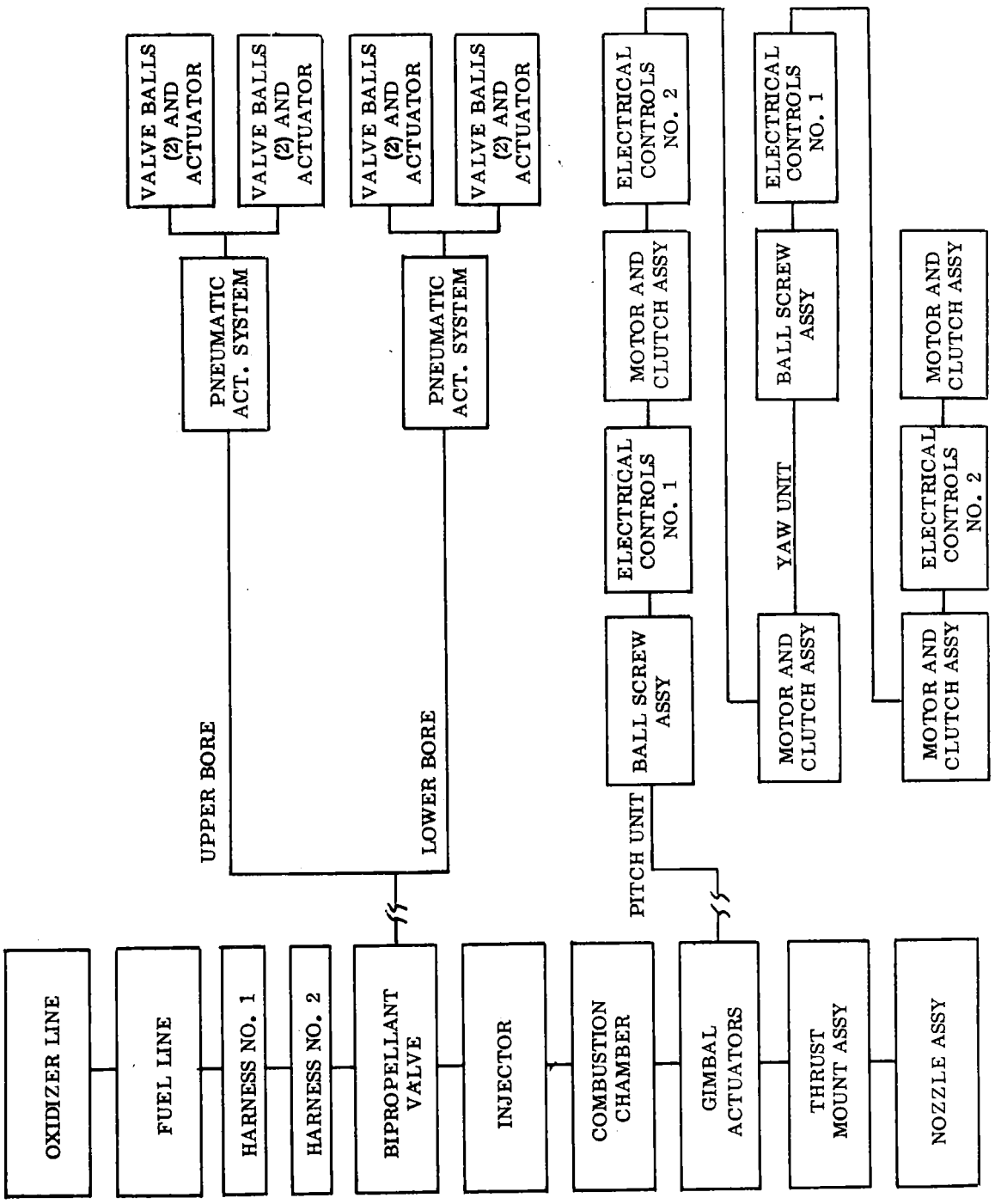

Figure 4-27. Reliability Logic Diagram for Engine Shutdown Operations and Coast Periods

The engine contribution to P_s should be assessed in both the active and passive phases, since the engine will be dormant for a major part of the mission. The active phases include the time from fuel system pressurization through the burn to the time pressure is relieved and the feed system is purged. This phase is normally considered the most hazardous.

Reliability estimates given in Reference 4.23 for the lunar baseline missions are presented in Table 4-18. These reliability estimates provide a basis for estimating reliabilities for the baseline mission, which is related to the ratio of burn-time, 600 seconds for the ELOR mission versus 546 seconds for the Apollo DRM. The slightly longer burn-time is required to compensate for the increase in the projected CSM weight, less than half the difference is required with the RTG-EPS concept.

Table 4-18. Estimates of Component Reliability for All Periods of SPS Engine Firing

Component	ELOR Mission P_s
Thrust mount	0.999052
Nozzle extension	0.998887
Combustion chamber	0.993596
Injector	0.998959
Propellant lines	0.996634
Gimbal actuator (each)	0.998541
Pneumatic actuation system*	0.989623
Bipropellant valve	0.999524
Single-Engine Total	>0.996

(*) The reliability figures given for the pneumatic actuation system are applicable to each of the two pneumatic systems, which are functionally redundant; that is, failure to supply pneumatic actuation pressure.

The hot-fire engine reliability for the baseline mission would be at least 0.996 without changes. This level of reliability is probably adequate; however, if it is deemed necessary to increase the engine hot-fire reliability, the combustion chamber reliability may have to be improved before a significant increase in engine reliability could be achieved. A review of the hot-fire test history of engine combustion chambers indicates only two failures. In both cases, the chambers were tested to failure, one for a duration of 1,956.4 seconds, the other for 2,392.4 seconds. Both failures were of the wearout type, and a value of 0.99999992 can be calculated as the estimated probability of no wearout for the ELOR mission. Twenty-five chambers were tested for durations of at least 750 seconds without the occurrence of any random-type failures. These data can be used to obtain a median value for the MTTF of about 27,000 seconds, which results in a demonstrated random reliability of 0.98 associated with the 600-second hot-fire duration specified for the proposed ELOR mission. This test experience indicates an adequate (perhaps overly conservative according to Reference 4.24) design with respect to wearout. The demonstrated random reliability is quite low because of lack of data. The true random reliability is known to be significantly higher, but cannot be demonstrated without accumulating more test data. Since no random failures have occurred up to the present time, there is no reason for recommending any change in design.

The passive engine phase of the proposed ELOR mission involves consideration of the effects of the prolonged coast period (about 90 days) on coast reliability. Reliability estimates are given in Reference 4-17 along with a qualitative appraisal of the anticipated effects of the baseline mission. As an aid in making the required qualitative judgments, it was found helpful to perform a failure-mode cause-and-effect analysis (FMEA) of each component. The FMEA analysis is presented in Reference 4.24.

There is a definite controversy over the effects of long-term exposure to the space environment, and there are few data to verify any position. So far, there have been no failures attributable to this effect. The FMEA indicates the potential effects; and, in each case, protective measures can be taken to prevent the problem. This question represents one of the areas requiring a full-scale test program. The supplier has indicated that the 90-day quiescent phase should present no deleterious effects to any of the engine components.

4.2.4 Main Propellant Tankage (Storage) Analysis

NOTE: Some of the information used herein was provided by the Allison Division of General Motors through Reference 4.25.

The main propellant tankage is required to store both the fuel and oxidizer in a liquid state for the full mission duration. Final fuel depletion is to be accomplished during earth approach and retrograde. Since the engine is pressure fed, helium will be used as a pressurant to expel the liquids from the tanks after ullage control. Two tanks for oxidizer and two for fuel are provided in Block II; this redundancy is expected to be required in addition to two helium tanks. The operational concept involves relief of the helium pressure during the long coast periods and activation just prior to igniting the engines. Ullage control is accomplished through use of the appropriate reaction control engines just prior to main engine ignition.

The reliability study for the Apollo tank program is summarized in the Allison final design report, Reference 4.26. The P_s of the propellant tank is estimated to be 0.9999998. The reliability estimate applies to the actual use phase of the tank life; that is, a propellant tank which has passed all inspections and acceptance tests and has been checked out in the vehicle has a 0.9999998 probability of going through preparation, countdown, earth launch, transfer, lunar orbit, and lunar landing without malfunction.

The reliability estimate and failure-mode failure-effect analysis indicated that the probability of failure is nil for all modes of failure, with the exception of the burst mode of the tank pressure wall. This wall has a failure probability of 0.262×10^{-6} (negligible). The failure probability of the tank wall was calculated by the method of interference, using the probabilistic distributions of the tank stress and material strength.

The reliability estimates for storage tanks are always suspect because they are not amenable to calculation by the normally accepted methodology; i.e., $R \neq e^{-\lambda t}$ for storage tanks. Rather, for the longer mission in particular, this normal method results in a very pessimistic estimate, and the true value (all the other factors being considered) is always much higher. However, to establish some boundary values, the value has been calculated and found to be 0.9994 for the ELOR mission. Therefore, the expected value of P_s is between 0.9994 and 0.9999997 and known to be near the latter, since it was calculated on the basis of strength-stress relationships.

Qualification tests and propellant storage tests have established the suitability of tanks for the Apollo mission. To substantiate the suitability of this tankage for the longer duration mission, it is recommended that the following testing be considered.

1. Long-term creep testing of titanium material specimens, including welded specimens.

2. Long-term stress corrosion testing of welded and nonwelded titanium specimens in each propellant.

3. Long-term storage of propellants in tanks at design stress. These tanks could be either full-scale tanks or subscale tanks made by the same fabrication methods as the Apollo tankage.

Propellant Gaging Function Analysis

NOTE: Much of the information used herein was provided by Simmonds Precision Products, Inc., through Reference 4.27.

The propellant gaging function (PUGS) is required to monitor fuel and oxidizer consumption and/or loss. In its present form it will meet the functional requirements of the ELOR mission. The potential variation in the dimensions of the selected fuel and oxidizer storage tanks can influence the applicability of the sensor assembly in particular.

The Apollo PUGS is comprised of two fuel probes, two oxidizer probes, an oxidizer control valve, a control unit, and a display gage.

The PUGS function is critical to crew safety because of the need for very accurate control of engine firing duration, which in turn, establishes the resulting velocity-vector changes. Its functions are therefore twofold, monitoring fuel and oxidizer remaining and responding to the burn time control signals from the guidance functions.

The Apollo DRM calls for an on-time of 660 seconds, while the ELOR mission on-time is expected to be somewhat higher because of the change in operational mode. Circuits not energized, will have negligible effect upon the components of the system if they are not in the environment of the propellants. Reliability data supports this position; and as a result, reliability criteria have been met with existing circuit configuration. The limiting factor is the sensor submerged in the propellant. The data indicate that the P_s of this function will be about 0.9999, which is the probability of one of the two sensors in each tank functioning normally throughout the mission.

The only potential problem area will be in the use of servo motors, motor generators, motor tachometers, potentiometers, and gear trains because of their lubricated bearings. In addition to the mission time of 95 days and storage time prior to launch of possibly two to three years, the bearing lubrication may migrate out of the bearings to some extent. Selection of the proper bearing lubricant for the extended mission would be in order, and does not pose a significant problem.

A detailed failure mode and effect analysis was performed and is presented in Reference 4.28.

The data indicate that the PUGS will produce satisfactory performance for the ELOR mission. Figure 4-28 indicates that the P_s of the weakest link, the sensors, will exceed 0.9999. Because the environmental conditions of ELOR and Apollo are essentially the same, except for mission duration, the principal concern is that of propellant exposure for the sensors and valve. A review was made of the Apollo qualification test programs specifically to obtain propellant exposure information. Each of four oxidizer valves has been exposed to N_2O_4 for approximately 130 hours for a total of 5,200 valve-unit hours without evidence of deterioration. Each of four oxidizers and four fuel sensors was exposed for approximately 2,800 hours in its respective propellant for a total of 11,200 fuel- or oxidizer-sensor-unit hours.

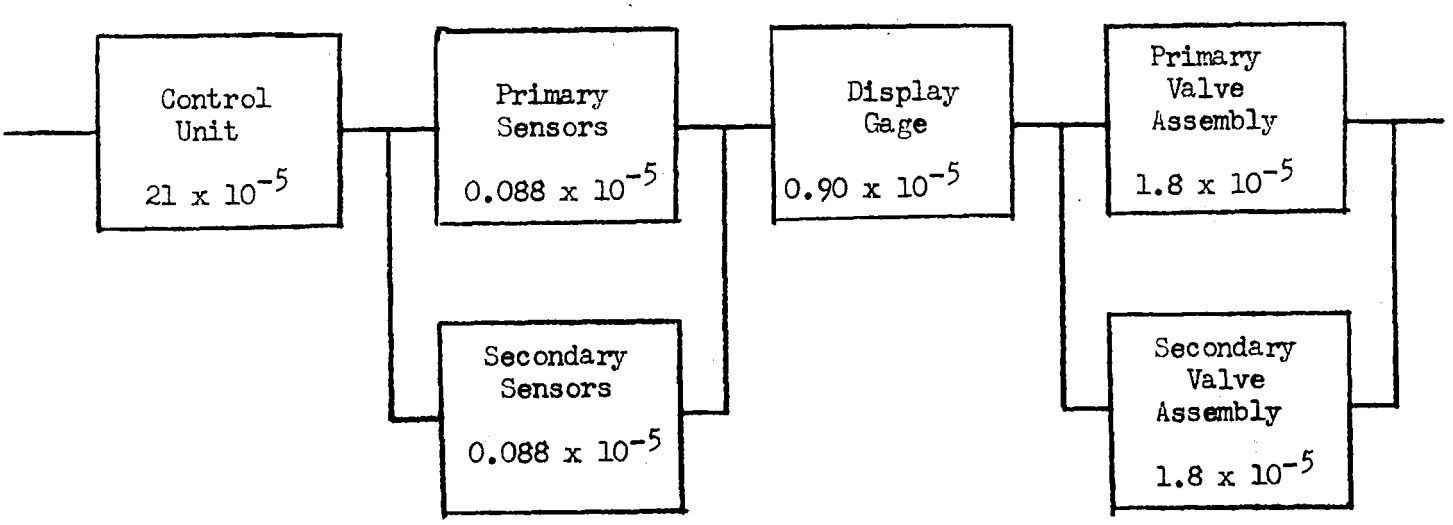

Figure 4-28. Reliability Logic, Propellant Gaging Function

Propellant Control Function Analysis

The propellant control function provides the means of moving both fuels and oxidizer from the storage tanks (passive or positive expulsion) to the engine proper.

A study of the Apollo Block II configurations, as applied to the ELOR mission, indicates that the same configuration will be directly applicable to any of the potential missions and spacecraft configurations, with minor modifications to fit the specific application and selected operational concept.

The helium-supply check-valve problem, the most prominent failure mode, was relieved by a change in operational concept. By relieving the pressure in the system during the long storage phase, the operational duty cycle was reduced to less than that of Apollo, and the probability of a failure (P_s) was reduced to less than 1×10^{-6}. This change in operational concept is not expected to introduce any problems; rather, it has further decreased the probability of failure in other components of the function.

The helium tank could fail in two modes by leakage and by burst. The effect of leakage, again the most prominent mode, is reduced to insignificance through use of a gate valve at the outlet and by including a redundant source of helium. The probability of bursting a tank is very low.

4.2.5 Deep Space Antenna (DSA) Subsystem

NOTE: Much of the information presented herein was provided by the Dalmo Victor Company through Reference 4.29.

Subsystem Functions

The DSA is required to provide high-data-rate communications between the CSM and the MSFN for all manned mission phases after translunar injection and prior to CM/SM separation for reentry. The ELOR communication range will include distances up to that encountered on the Apollo DRM; and for that reason, the Apollo Block II DSA will perform the required functions. Since it must be used in conjunction with the up-data link and it affects P_s, so also will the DSA, to a degree. The DSA has a gain of approximately 28.6 db and a beamwidth of about six degrees. The beamwidth will be unsatisfactory for the rolling storage mode and, therefore, have to be operated in a modified scanning mode if used throughout the quiescent mode.

The scanning is accomplished through a two-axis gimbal that requires no power during standby or launch and is locked in any position by removing the electrical power. The servo system is a closed-loop system that

positions the gimbal anywhere between the ±6.6-degree limits when commanded. The system has been demonstrated to be reliable on several programs.

The recommended operational concept does not exclude use of the DSA during the dormant mode because of the potential unreliability and its inaccessibility for repairs during that time; however, this alternative is analyzed to determine the risk, the problem, and the alternatives. It is recommended that the CM omnidirectional antennas be used and that a slower data rate be enforced for the transmission of status information during this period. Omnidirectional antennas seem to provide the required function so long as the time factor is not critical (See Section 4.1.5).

The functions required of the ELOR are identical with those of Apollo for all mission phases, except during the dormant mode. These functions are covered in detail in Section 4.1.5. The system is not crew critical and therefore only contribute to P_{90}.

Subsystem Analysis

The DSA is made up of three components as presented in the reliability logic of Figure 4-29. It may be used in the two different modes during the storage phase of the ELOR mission while operating full time or stored. The contribution to P_{90} varies radically for these two approaches:

1. For full time operations, $P_{90} = 0.96$ (2200 hours).

2. For stored mode, $P_{90} = 0.9991$ (183 hours).

Before a decision is made regarding selection of the desired operating mode, it is desirable to review the reliability of the DSA and determine if the potential weak links could be resolved. The logic of Figure 4-29 indicates that the electronic assembly and the antenna assembly share in the problem. Three of the five second-level functions are approximately equal, and all three would have to be considered to raise R_o substantially above 0.99 for the full-time operations mode.

In the stored state, the DSA will satisfy the mission criteria for safe return in that there is a negligible deleterious affect on P_{90} during this period; and the contribution to P_{90} will be better than 0.999, or less than chance in a thousand that the DSA will not operate when scheduled.

No additional development tests beyond the 2,500-hour life test are expected to be necessary. No modifications will be required if the DSA is operated in the recommended mode, and no maintenance actions are required or recommended under these conditions. Failure to function when required is not considered catastrophic, since the omnidirectional antenna can be used.

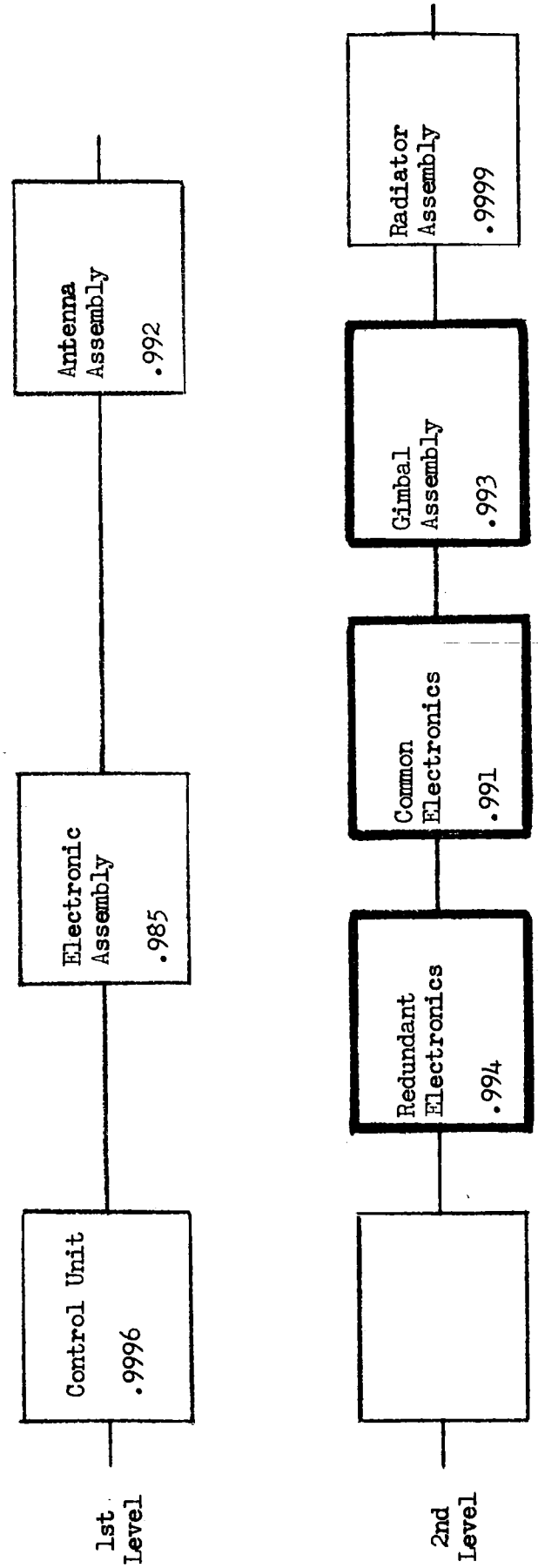

Figure 4-29. Antenna Subsystem (DSA), Reliability Logic for Full-Time Operation

4.2.6 Cryogenic Storage

A cryogenic storage (CS) function is required to provide the necessary reactants for fuel-cell operation throughout the mission. Separate storage facilities are provided for liquid hydrogen and liquid oxygen. The NAS8-21006 concept provided a separate storage facility for the reactants to be used during the quiescent phase of the mission; these were to be under subcritical (liquid) conditions. The storage facilities must provide for an additional fuel weight of about 2100 pounds, 250 pounds of which is liquid hydrogen. The subcritical storage concept was recommended because it minimizes the launch weight and keeps it within the uprated Saturn V capability. However, to accommodate this volume of propellant, it is necessary to modify the Apollo SM as depicted in Figure 3-3. The hydrogen storage is located in Sector I, and the oxygen tank occupies all the available space in Sector IV.

Use of the subcritical Dewars are the limiting factor in the development of the ELOR concept. The state of the technology has not developed to the point where subcritical storage has been demonstrated for extended missions. Feasibility has been demonstrated and the technique has been used on the shorter Gemini missions. It is anticipated, however, that it will take between two and three years to produce a qualified set of tanks.

A reliability analysis of these tanks is impractical at this time. Approximations made on the basis of other tank performance indicate that the chances of failure will be between one and one hundred per million, depending on the design margin applied.

It should be noted that this problem will not exist if the SD proposed power source is acceptable. In that case, the Apollo cryogenics will more than meet the ELOR mission requirement, and the injected weight of the cryogenic storage system will remain unchanged and as safe as Apollo II.

4.2.7 Command and Service Module Structure (CSMS)

The CSMS remains virtually unchanged as a result of the recommended mission configuration. The functional requirements remain the same and, since the loads have not changed materially, neither will the structural elements.

There are, however, two potential problems that would affect the CSMS, they are the meteoroid and radiation problems. The CSM is normally designed to a 0.999 probability of no penetration or deleterious effects to the heat shield; however, this value is for the 14-day mission. Since these hazards are time dependent, the ELOR mission must be reexamined. In Section 2.8.2

the potential radiation problem was dealt with. The data presented therein plus the absence of the crew from the orbiting CSM render this a safe risk.

The meteoroid situation is quite another matter. Table 4-19 presents an evaluation of the meteoroid hazard projected for the ELOR CSM and the resulting compensating actions necessary to increase its contributions to P_s to over 0.995. (See Paragraph 2.8.3.). Failure modes that constitute a hazard are defined in Appendix M. The data indicate that the Apollo Block II left in lunar polar orbit for 90 days will sustain some meteoroid damage in at least one of ten areas, which could preclude safe return of the crew. The required compensating actions (worst case) are also presented along with a conservative estimate of the potential weight penalty.

Maintenance or repair action will resolve damage problems in at least three of the ten areas:

1. A patching kit can be provided to repair the heat shield prior to injection from lunar orbit, as demonstrated by Reference 4.30. The result would be to eliminate this failure mode as a significant hazard.

2. The same type of patching kit could be used to repair either the EPS or ECS space radiators; however, some provision must be made for replenishment of the lost fluid. Further, if the EPS radiators leaked, abort from the lunar surface would probably be required as soon as possible. Thicker tubing is also proposed.

Redundant design is already included in three of the potential areas:

1. The electrical buss is completely redundant, and separate paths are used. Further, a failure in one will not render the entire harness useless. No additional redundancy is required.

2. The propellant and RCS tankage are redundant; however, a puncture would render the SM useless or compromise the P_s.

The remainder of the components must be protected by shielding as indicated. The total resulting increase in weight is expected to be less than 500 pounds. Details are presented in Reference 4.30.

Table 4-19. Meteoroid Shielding Analysis, 90-Day ELOR CSM

CSM Component	P_s*	Corrective Action	Weight (Pounds)
CM heat shield	0.996	Repair with patching kit	2.5
CM windows	~0	20-mil plug-in shield	0.8
CM umbilical	0.98	Fiberglass shield	10.0
SM electrical buss	0.95	Redundant buss (Block II)	0.0
SPS tankage	0.96	Aluminum shielding	335.0
SPS propellant lines	0.99	Aluminum shielding	15.0
RCS tankage	0.94	Shielding and redundancy	56.0
RCS plumbing	0.993	Shielding	5.0
EPS radiators	0.92	Increase tube thickness (0.12 inch) and/or repair	12.0
ECS radiators	0.43	Increase tube thickness (0.3 inch) and/or repair	61.0
All other components	>0.999	No action required	0.0
Totals	≈0		497.3

*Expresses the probability that the meteoroid would not create a situation that would compromise the abort criteria as reflected in Appendix M. (Note that, without the corrective actions, the risk is very high.)

4.2 THE SERVICE MODULE SYSTEMS

LIST OF ABBREVIATIONS

SM-EDP	Electrical Power Plant
FC-75	Fuel Cell Coolant
RTG	Radioisotope Thermoelectric Generator
FCM	Fuel Cell Module
EMCA	Electrical Monitoring and Control Assembly
FCS	Fuel Cell System
PC	Purge Controller
WCC	Water Cavity Control
WRA	Water Removal Assembly
WRV	Water Removal Valve
PT	Pressure Transducer
SM-RCS	Reaction Control System
TCA	Thrust Chamber Assembly
SPS	Service Module Propulsion System
PUGS	Propellant Utilization Gaging Subsystem
ADSA	Apollo Deep-Space Antenna
CS	Croygenic Storage (system)
CSMS	Command and Service Module Structure

4.3 LUNAR MODULE ASCENT STAGE SYSTEMS*

NOTE: Some of the information used in this section was provided by the Grumman Aircraft Engineering Corporation through Reference 3.2 and 4.37.

This section presents the LM ascent stage subsystems analysis. Details are presented only where changes are projected beyond that for the lunar mission. The baseline design is as described in Reference 3-2.

4.3.1 Electrical Power (AEP)

The electrical power source for the ascent stage (AEP) is provided entirely by two silver-zinc batteries, which provided adequate life and reliability for the ascent phase of the LOR mission, but have a marginal life expectancy for the 90-day quiescent phase, even though little to no drain-charge cycles will be imposed on them. As a result, it is recommended that they be replaced with the longer life silver-oxide-zinc (AgOZn) batteries where $P_s = 0.999$ each (Reference 4-3).

The AgOZn 90-day wet-life batteries would increase weight by 16.5 pounds. Selection depends on other factors, such as abort criteria, not included herein; however, the battery manufacturers seem to prefer the silver-oxide-zinc because of its simplicity. Furthermore, the 90-day wet-life concept provides a backup to the descent stage EPS.

4.3.2 Environmental Control (LM ECS) and Thermal Design

NOTE: Some of the information used herein was provided by Hamilton Standard through Reference 4.32.

Functional Description

The LM ECS functions for ELOR can be subdivided into two classes, those associated with the taxi phase and those associated with the quiescent phase. Each imposes a need for modification of the basic LM ECS designed for Apollo. The taxi phase requires provisions to support a third man which has been added for this mission. The quiescent phase presents a unique situation in which minimum control is required. The pressure suit circuit

*A foldout sheet listing abbreviations used in Section 4.3 and their meanings is located at page 251.

is held at about 0.5 psia, although there is some question as to whether it is required. The cabin can be allowed to leak without makeup (or maintain the 0.5-psia pressure level). The wall temperature is held between about +40 and -100 F. The LM ECS consists of four subsystems, only two of which require any modification for the ELOR mission. These are—

1. The atmosphere-revitalization section (ARS) is to continuously supply oxygen to the astronauts, provide oxygen cooling, remove products of metabolism from the air, and return reconditioned air to the astronauts for breathing and cooling. During suited operations, the ARS operates as a closed-loop system; otherwise, it operates as an open-loop system supplying oxygen to the cabin and reclaiming cabin air for removal of metabolic wastes and heat. (Modifications may be required to facilitate higher flow rates; some test data are required in this area.)

2. The heat-transport section (HTS) circulates ethylene glycol and water as a coolant for electronic equipment, batteries, cabin air, and suit oxygen. The excess heat in this coolant loop is rejected by means of a porous-plate sublimator into space. Provisions for 90-day operation are required.

3. The water-management section (WMS) consists of three water tanks, a distribution manifold, and valves. This is the only water supply aboard the LM and is used for drinking, food preparation, portable life support system water supply, and supply fluid for the porous-plate sublimators of the HTS. The largest tank supplies the needs during the descent and lunar stay-periods. Two smaller tanks are used only during the ascent phase.

4. The oxygen-supply and cabin-pressure-control section (OSS) controls the cabin oxygen pressure and supply, maintaining the pressure at 4.8 0.2 psia for use in the cabin or 3.8 0.2 psia for use during suited operations. This section includes all pressure control functions required by metabolic consumption and vehicle leakage losses. Another function of this section is to supply oxygen for recharging the oxygen tank of the PLSS. Provisions for the third man are to be added to this function. Parameters used in the design of the LM ECS for the ELOR mission are as follows:

Cabin temperature	- 55 to 80 F manual operation (manned ops)
Cabin relative humidity	- 40 to 80 percent
Cabin pressure	- 4.8 + 0.2 psia

Suit circuit pressure	- 4.8 + 0.2 psia, normal 3.8 + 0.2 psia, preparation for EVA
CO_2 partial pressure	- 7.6 mm Hg. maximum
Gas composition	- Pure oxygen
Suited heat loads (maximum)	- 295 Btu/man-hr, sensible - 220 Btu/man-hr, latent - 515 Btu/man-hr, total (714 possible)
Suited heat load (average)	- 396 Btu/man-hr (515 possible)
Voltage supply available	- 25 to 31.5 vdc

Systems Analysis, The Three-Man Requirement

The ELOR mission makes it necessary to provide for a third astronaut in the LM vehicle. Several considerations indicate that no design effort may be required to improve system performance. A comparison of the Apollo mission versus the ELOR mission requirements for the LM ECS indicates three primary differences: provisions for a third astronaut, 90-day quiescent phase, and shorter period in which astronauts will actually be depending on the LM vehicle. An estimate of LM vehicle manned operation during the ELOR mission indicates a total operating time of about 30 hours, including descent, transfer to and return from the lunar shelter, and ascent for the Apollo mission, this operating time is 48 hours or 60 percent longer, Given equal metabolic heat loads for each man, there are fewer man-hours in the ELOR mission: i.e., 90 versus 96. The shorter mission also decreases the overall requirements for heat rejection from the vehicle electronics and batteries. This heat is removed during manned operations by supplying water to a porous plate sublimator, which allows ice to be sublimated to space vacuum. For the ELOR mission with three astronauts, the extended rendezvous period may require additional water (about 5.3 pounds), but more detailed metabolic profile data are required for final determination.

Other expendable supplies should be satisfactory. Normal leakage overboard of vehicle atmosphere would be for a shorter period, and the number of PLSS missions (i.e., required PLSS refills) may be less, depending on the lunar base concept. The analysis indicates that the capacity of LM expendables will be sufficient for the ELOR mission. These expendables include oxygen, food, water, lithium hydroxide (for carbon dioxide removal), and activated charcoal.

Physically, the third astronaut will require umbilical connections to his pressure suit. This requirement involves the addition of one or two Item-138 flow-reversing and shut-off valves, depending on the integration concept. This valve requires 33.5 watts peak power and weighs 3.51 pounds.

The WMS and OSS subsystems are completely suitable for three-man operation. The addition of one valve makes it possible to support three men in suits. The major question remaining is the capacity of the ARS and HTS subsystems to handle the equipment and metabolic cooling requirements of three-man operation in a satisfactory manner. A review of mission conditions indicated that the three-man-suited mode would be the most severe; therefore, this mode was selected for study. If the ARS and HTS could satisfactorily support this mission mode, then all other less severe modes also could be met satisfactorily.

Primary considerations are the flow to each suit and cabin humidity. Evaluations were made by using the Apollo LM computer program with the ELOR metabolic data. The results of the computations have been reproduced schematically in Figure 4-30. The major pressure drop in the ARS circuit is found in the suits and the accompanying crossover valves. With three suits in parallel, the pressure drop across each suit and accompanying valve is decreased slightly. In this condition, the fan passes slightly more volume flow than with the two suit configuration. With three men suited and connected, each suit would receive 9.5 cfm at about 54 F. This flow is equivalent to that which the present command module ECS supplies to each suit during the basic Apollo mission; however it is lower than the present LM system capability. In addition, the existing ARS has the capability to handle over 1,500 Btu/hr of total metabolic load. If the individual maximum metabolic load of 515 Btu/hr is reached, the total metabolic rejection for the ARS would be 1,545 Btu/hr. At these conditions, a cabin dew point in the range of 60 to 65 F is expected. There is also a capability of the LM system to allow for brief metabolic loads of 600 to 650 Btu/man-hour. Under these higher metabolic loads, the lithium hydroxide would be prematurely exhausted and a refill charge will be required earlier than normal. These higher metabolic loads are possible, but not expected. With three suited astronauts, periods of high work loads should be limited to one man. In any event the third man is in no position to work.

Although men using the present space suits have had metabolic rates of 1,000 Btu/man-hour, significantly better suits are already available than those used in the present Apollo program; and it is expected that, by the 1975 ELOR mission, a metabolic rate of 500 Btu/man-hour will represent a very high activity rate for zero-g or lunar-g suited operations. Improvement is also possible in the design of suits to allow increased removal of latent heat from the astronaut's skin surface. By 1975, these suit design improvements coupled with the capacity of the present LM ECS should minimize restrictions on work activity with three suited astronauts. Additional study in this area is desirable after some data are available from LM flights.

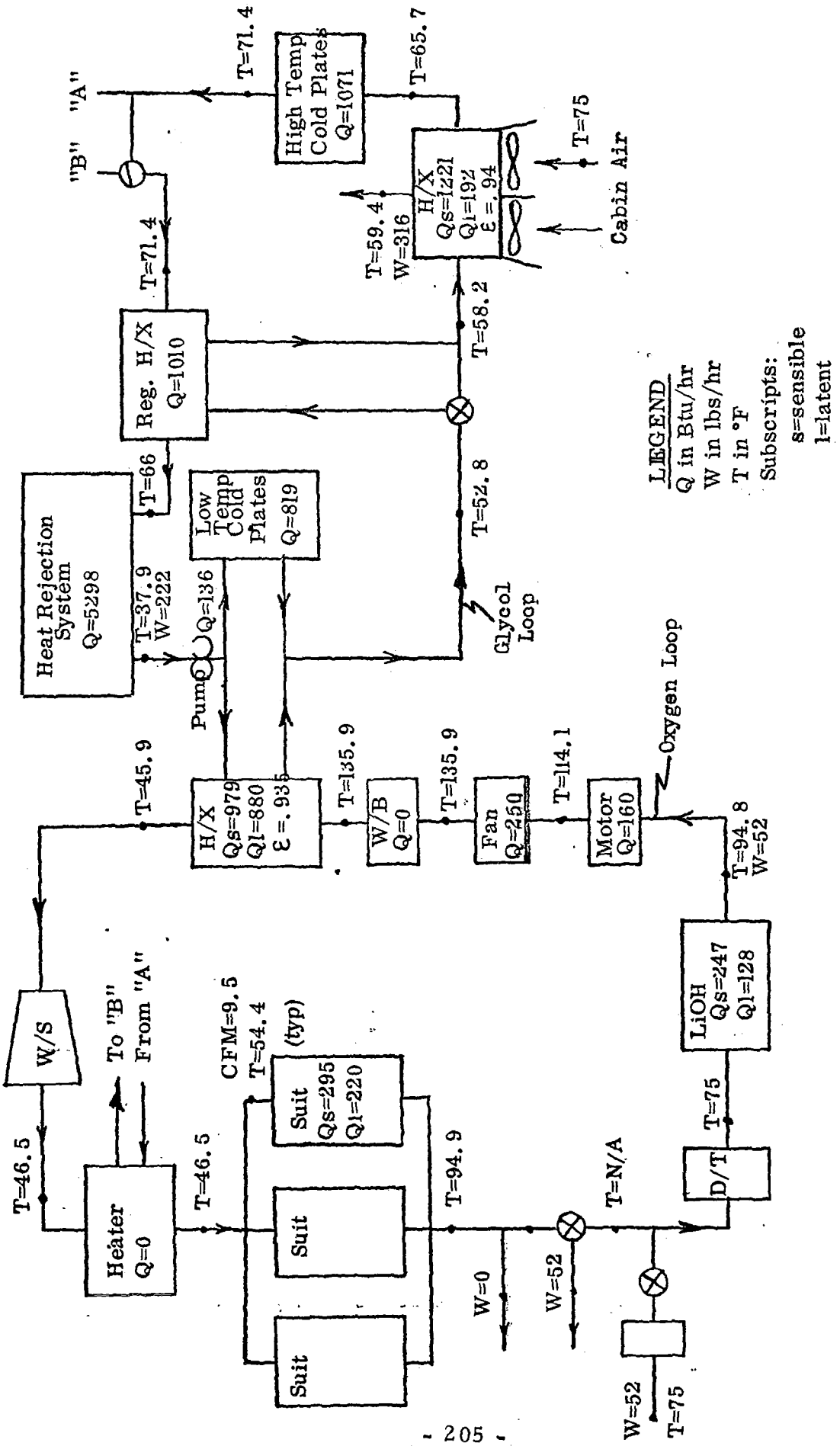

Figure 4-30. ELOR Mission LM ECS Flow Diagram

To assure adequate crew comfort during the hot-cabin ascent phase with the recommended suit flows, an oxygen suit inlet temperature of about 50 F is desirable. To maintain this temperature limit, increased heat-rejection capacity may be required. Three methods for providing supplementary heat rejection have been considered:

1. Addition of a second water sublimator to the primary heat transport section.

2. Use of the 20-square-foot radiator, which is added for temperature control suring lunar staytime.

3. Use of the existing emergency water boiler in the ARS.

The additional sublimator is recommended since it provides maximum flexibility in terms of thermal load contingencies; however, it imposes a weight penalty of approximately 15 pounds. The 20-square-foot radiator is effective only when it experiences a restrictively low thermal environment. Such cannot be maintained for typical lunar ascent conditions. The capability of the ARS emergency water boiler to provide the required supplementary heat rejection is marginal and may require the addition of a suit-heat-exchanger bypass valve (Figure 4-31). The oxygen flow would otherwise be heated in the suit heat exchanger.

The cabin CO_2 concentration can be contained within present limits without hardware modifications. The existing cabin LiOH cartridge has a capacity of 40 man-hours and has sufficient volume and surface contact area to absorb the CO_2 produced by the three-man crew. Three cabin cartridges are recommended for the ELOR LM: two for the descent postlanding checkout, prelaunch activation, and prelaunch checkout phases and one for the ascent phase, including orbital contingency.

The incorporation of the third suit connector in the loop may be accomplished either by integrating it directly into the loop or by using a portable manifold attached to one of the existing connections (Figure 4-31). Integration directly into the loop will involve modification of the plumbing and packaging of the ARS. The use of a portable manifold, while not requiring an ARS modification, will impose a greater fan power requirement by virture of an increased pressure drop created by the addition of balancing orifices into the loop.

Appendix Q includes a power and weight summary for the expected ECS system. Added to the present LM ECS are one or two Item-138 suit valves (depending on concept) to allow suited operation for the third astronaut. Added to the weight of each of the three sublimators (Items 107, 209 and 224) is 0.1 pound for porous plate covers to be installed during the 90-day storage period. Total system weight excluding expendables is 215.87 pounds.

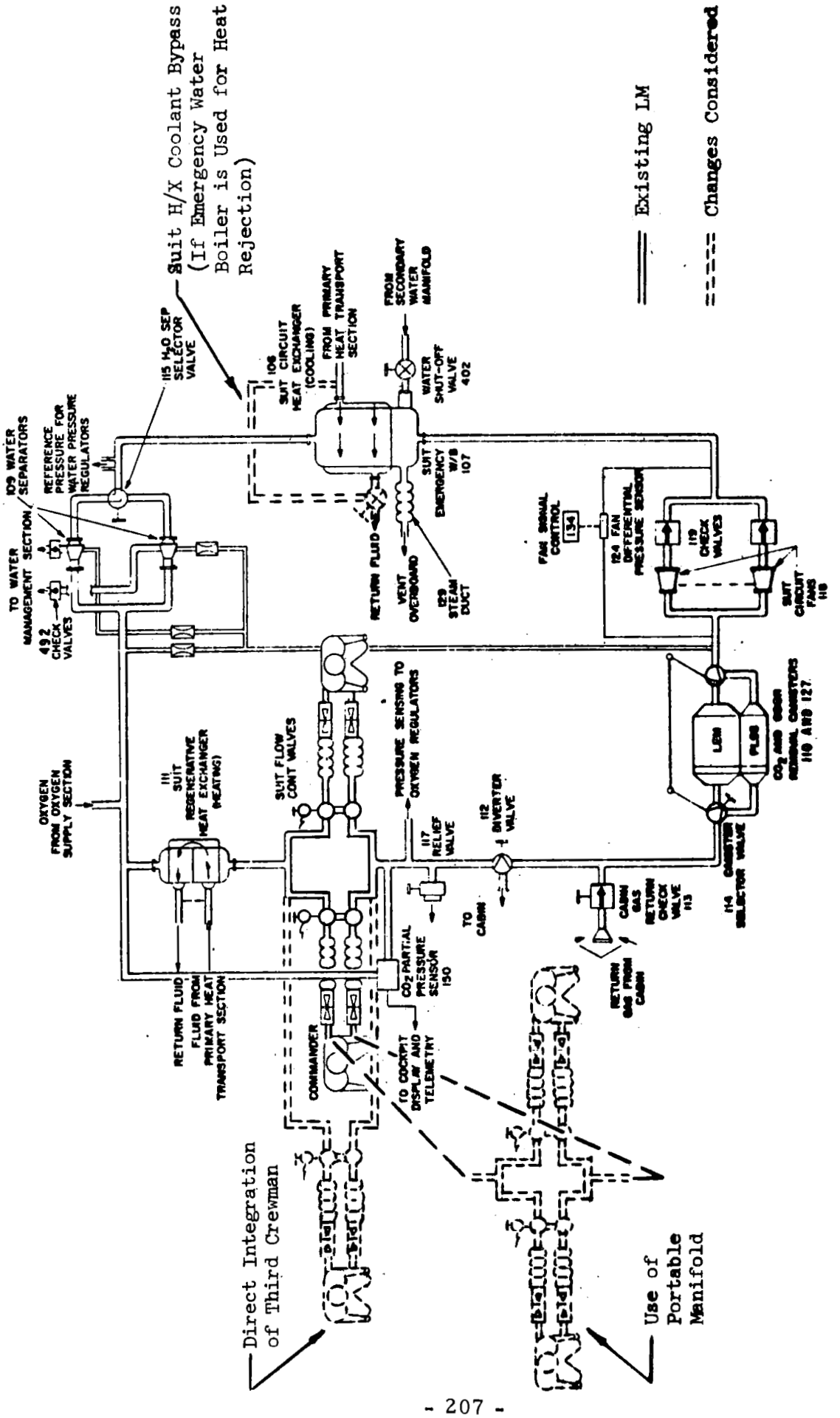

Figure 4-31. Environmental Control Subsystem, Atmosphere Revitalization Section

Systems Analysis, Quiescent Mode

During the 90-day period, the LM vehicle must remain a reliable means of returning the astronauts to the CSM on demand. The applicable environmental factors are time, temperature, and pressure. For the ECS, other factors, such as lunar dust, radiation, and meteorite activity, may turn out to be significant problems.

On the lunar surface, continuous temperature control is required for those items of equipment that support the storage phase and/or the subsequent ascent phase of the mission. Table 4-20 presents the allowable limits for those equipments which have been identified as requiring the closest temperature control.

Table 4-20. LM Quiescent-Phase Temperature-Control Requirements

Component	Temperature Limits (Degrees F)
Batteries (ascent and descent)	0 to 80
Pyrotechnic batteries	-10 to 105
Water tanks	40 to 160
Propellants	40 to 100
Abort sensor assembly (ASA)	110 to 135 } Controlled by heaters*
Inertial measuring unit (IMU)	135 } Controlled by heaters*
(*) These may not be required. Test programs are required to verify the acceptability of operating components at lower temperatures.	

To maintain allowable temperature limits, a combination of passive thermal design modifications and semiactive temperature control are recommended by Grumann. The modifications include:

1. Change α_s/ϵ ratio of the top ascent stage surface thermal shield to 0.2.

2. Reduce insulation thickness of the top ascent stage surface to 10 layers of NRC-2.

3. Add a deployable thermal cover to the top docking tunnel.

4. Add 25 layers of NRC-2 insulation to the descent stage compartments containing the batteries and water tank.

5. Cover ascent engine area with one layer of mylar (0.2 mil thick) to minimize heat leak.

Analysis of the vehicle thermal balance has been performed assuming these modifications for both lunar day and night conditions. For both conditions, intermittent active temperature control is required.

During the night storage phase, approximately 500 Btu/hr can be supplied to the vehicle by the waste heat of the electrical power generator, whether fuel cells or a radiosotope thermoelectric generator (RTG) is used. Since the RTG is recommended, it was used in this analysis. Figure 4-32, is a schematic of a heat-pipe system that is to transport waste heat from an RTG to selected positions on the vehicle. The heat is transferred by radiation from the RTG to a heat exchanger, or boiler, containing a volatile liquid. The heat vaporizes the liquid, which rises in a pipe to a condensing section. The vapor condenses on the cold surface giving up its latent heat and returns by gravity to the boiler. The cold-condensing surface consists of tubes in good thermal contact with the cabin wall. Distilled water is recommended for the liquid.

Control of the system is provided by a valve that restricts the condensate flow; the fluid is trapped in the heating panel and the boiler runs dry except for the amount of condensate returned by the control. See Section 4.4.2 for details on the SNAP-27 RTG. The electrical performance and the life of the generator is affected by the temperature of the unit. The addition of the heat-pipe boiler changes the external environment for which the SNAP-27 is designed; therefore, the heat rejection fins of the RTG may require some modification.

During the daytime portion of the quiescent phase, active heat rejection is required on an intermittent basis, to dissipate structural heat load inputs from the external environment and electrical heat loads generated during vehicle status monitoring. Since the vehicle has no active cabin atmosphere temperature control during this phase, the main portion of the ascent stage thermal load is radiated to the aft equipment bay. Figure 4-33 is a typical temperature and load profile of the stored vehicle for both day and night cycles based on Surveyor VI data.

The ascent stage and descent stage structural temperatures are shown for worst-case decoupled locations. The critical elements, such as water

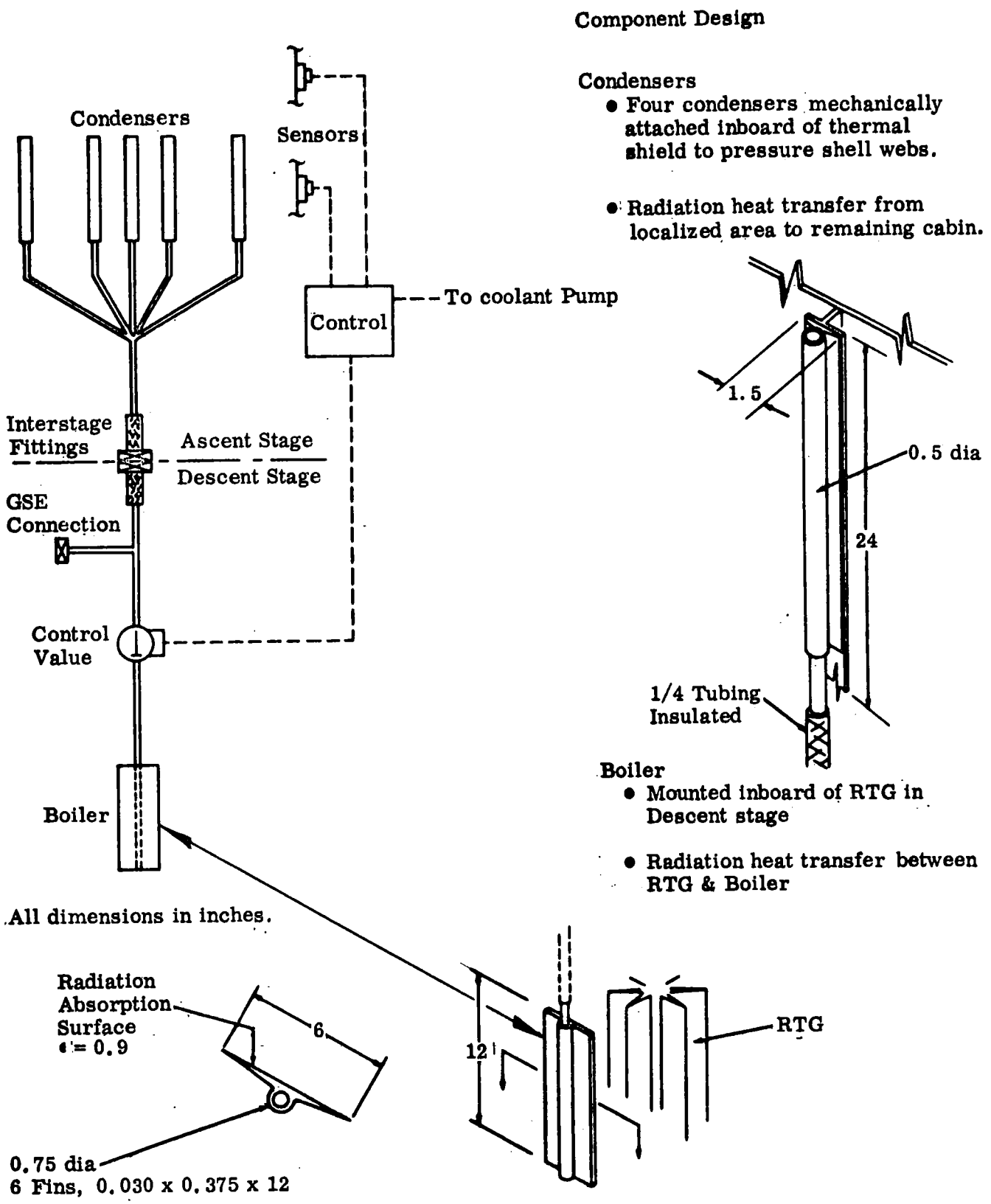

Figure 4-32. RTG Heat Pipe

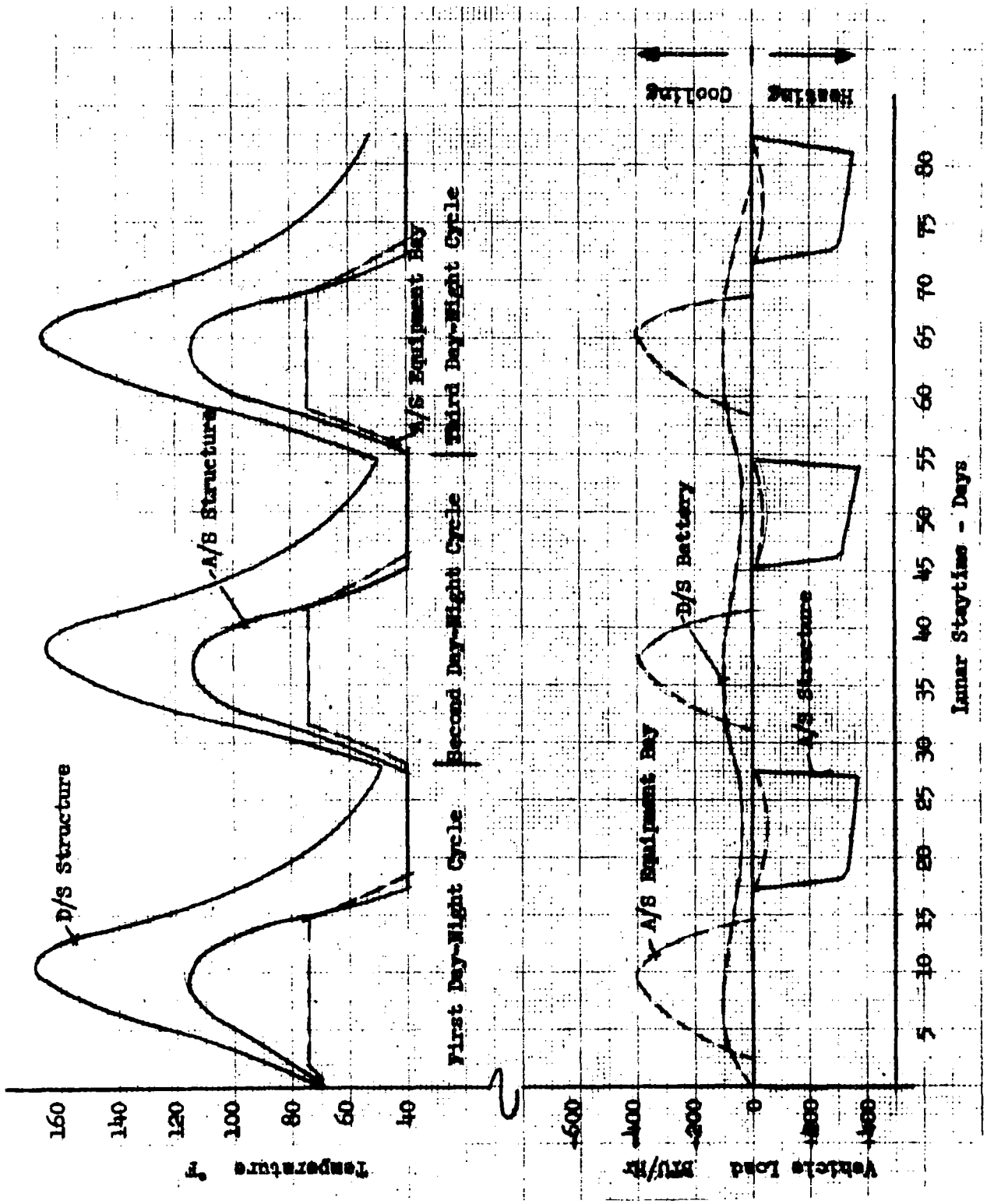

Figure 4-33. Vehicle Thermal Profile, Storage Phase

and propellant tanks, are coupled to the temperature control systems so that their temperature limits are maintained. A maximum heat rejection rate of 500 Btu/hr is required during the daylight phase.

The use of either radiators or water sublimation has been considered as the means of heat rejection. Using water sublimation, approximately 300 pounds of water is required during the lunar surface storage phase, not including post-landing and prelaunch activities. An additional consideration is the inability of the water sublimator to operate below 1,000 Btu/hr. Since the nominal heat rejection requirement is expected to be 500 Btu/hr, use of the sublimator is not the most attractive approach. As a result of the potential complexity and associate water weight penalty, the use of radiators is recommended. A 20-square-foot radiator integrated directly into the existing LM heat transport loop is capable of providing the heat rejection required. The structural integration of the radiator is shown in Figure 3-4. It is rigidly attached to the top of the ascent stage. No radiator controls are required, since, during minimum-load cold-case conditions, heat provided by the RTG will maintain the radiator above its freezing point.

The requirements and procedure associated with establishing the LM ECS quiescent state and the reactivation procedure recommended by Hamilton Standard is presented in Appendix R.

Reliability and Maintenance Considerations

In assessing the reliability of the LM ECS and its contribution to the mission P_s, the hardware and its reliability can be considered in two categories: those used during the manned mission and those operated during the quiescent phase; however, these are not mutually exclusive categories; and, in fact, many of the components of the heat loop are included in both categories. In any event, their probabilities can be multiplied to estimate P_s if they are estimated separately with regard to mission phase.

During the manned phases, the system reliability and, therefore, its contribution to P_s will remain virtually unchanged from that of the Apollo mission. Given a reasonably controlled quiescent state, the contributor to P_s should be somewhat better because of the 25-percent lower duty cycles on much of the equipment on the lunar surface.

Reliability calculations from the present Apollo program indicate that the LM ECS will have a reliability of 0.998 based on the manned mission profile. Crew safety is 0.9996, which includes an additional 16 hours of crew operations on the lunar surface as a safety margin. These calculations are based upon failure effects analyses of each component and are supported by limited-endurance testing and test data. Since the

LM ELOR operating time is to be only 30 hours for the manned phase versus 48 hours (maximum) for Apollo LM, the resulting LM ECS contribution to P_S for the ELOR mission is expected to be higher than for Apollo in spite of the third crewman. P_S for manned phases is therefore estimated to be over 0.999 without any provision for maintenance.

The unmanned quiescent phase requires some functions to operate throughout the mission. These are presented in reliability logic form in Figure 4-34. They are, for the most part, associated with the heat-transport loop. These components operate to distribute the heat within the LM, cool operating electronic equipment and the power source, if required. This concept requires the use of in Item 290 pump during the 90-day storage period, which will add about 540 operating hours. It is only qualified for 150-hour life, but tests have been run for 2,000 hours without failure. The pump package includes an alternate pump and an emergency pump (a three-unit package); thus a failure due to wear requires only a pump switchover. The reliability data indicate that the pump package still may be the weakest link in spite of the internal redundancy and only a 25-percent duty cycle during quiescence on the lunar surface. This duty cycle is preceded and followed by continuous operation for the lunar descent, ascent, and docking phases. Because the cumulative operating time based on this duty cycle exceeds the life requirement to which the assembly is presently qualified, the assembly would require requalification and/or provisions incorporated to permit replacement on the lunar surface. Replacement may require (1) additional flexible lines and disconnects on the fluid connections, (2) the addition of an electrical disconnect replacing pressure-sensing pigtails, and (3) the use of a specialized tool for removal of partially inaccessible mounting bolts. Provisions for replacement of the pump motor or the package will increase the P_S to 0.9999 for this function.

The coolant accumulator in the heat-transport section accommodates volumetric changes caused by temperature variations in the heat-transport section, maintains a head on the coolant fluid to prevent pump cavitation, and provides a small makeup supply. The nominal allowable leakage rate over the long-duration storage phase may impose a requirement for additional accumulators for fluid makeup. Areas requiring additional study related to extending the operational requirements of the accumulator are diaphragm life, leakage rates, fatigue, permeability variations, and effects of the water/glycol solution on the diaphragm. The accumulator is located in the aft equipment bay area of the ascent stage and is not considered a candidate for maintenance. Provisions for a refill or a redundant accumulator will raise its contribution to P_{90} and P_S to well over 0.99999 and eliminate any further concern.

Other components that may exert some influence on the LM ECS effects on P_S involve the LiOH cartridges and the fans. System life tests are required.

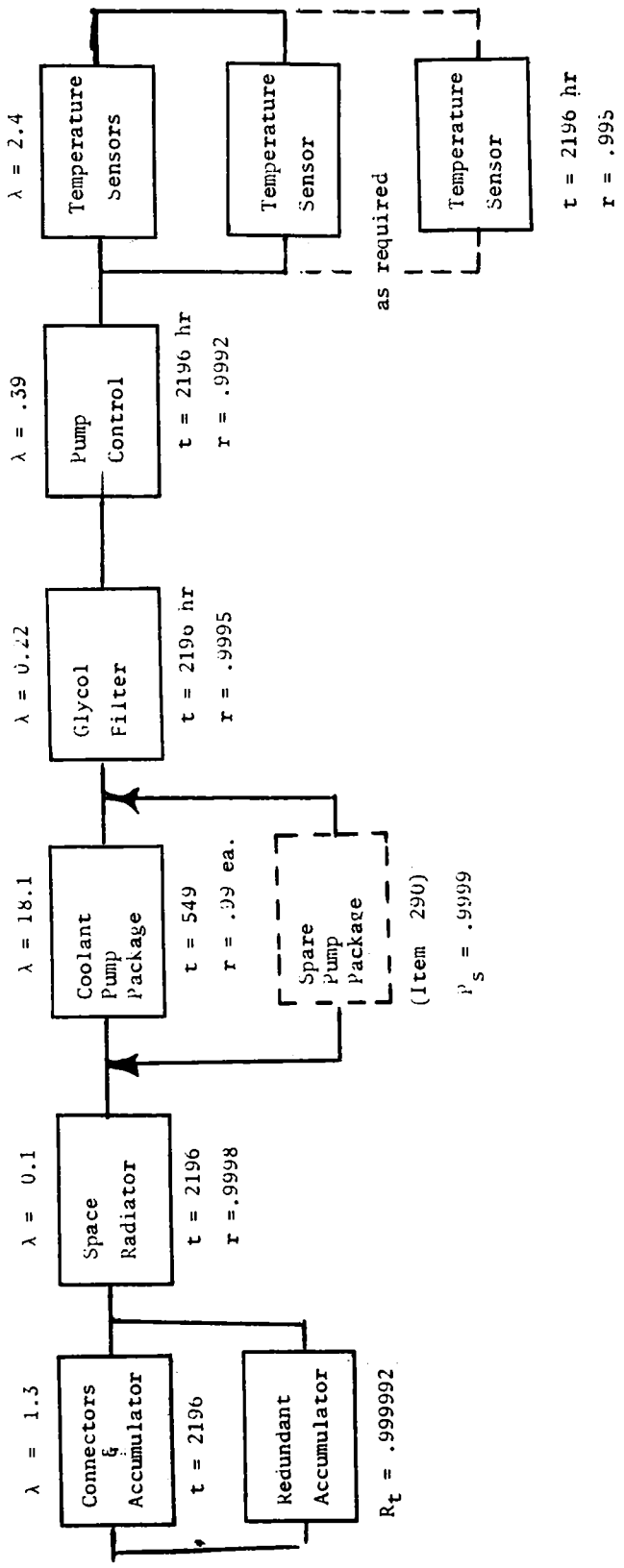

Figure 4-34. Reliability Logic Diagram, LM-ECS, Heat-Transport Loop Modified for ELOR

Two types of LiOH cartridges are used in LM: one is used in the LM ECS and the other is used in the portable life support system (PLSS). The only chemical change anticipated in the cartridges during long-duration storage is the eventual decomposition of LiOH to Li_2O and H_2O. The water, in turn, vaporizes, leaving a completely dehydrated canister. The rate at which this activity occurs is a function of temperature and pressure. Generally, this dehydration is not considered to be a problem, because Li_2O can be stored indefinitely and in itself can be used to absorb CO_2. In application, the Li_2O in the ECS will be rehydrated to LiOH by the metabolic water vapor produced by the crew; therefore no degradation in P_{90} or P_s is expected.

The suitability of allowing PLSS cartridges to become dehydrated is questionable. While the cartridges are large enough to absorb the quantity of CO_2 produced for a three-hour EVA, they are limited to the rate at which they can absorb it because of the very small quantity of LiOH present and the equally small oxygen flow rate that the PLSS delivers to the cartridge. The cartridges must, therefore, be hydrated sufficiently to yield optimum absorption capability. During EVA, the latent metabolic load is kept to a very low level by the liquid-cooled garment; therefore, the metabolic load cannot be considered as a source of water and the cartridge must be sufficiently hydrated prior to use. A solution is to store the cartridges in hermetically sealed containers and eliminate any effects on P_s.

The cabin and suit fans will not be operated during the quiescent-storage phase; consequently, there is no requirement for increasing their operating life requirement. The fans are currently designed with double-sealed bearings to minimize the possibility of lubricant loss and/or contamination. Tests must verify their effects on P_s.

The remaining components are not expected to exert significant influence on P_s.

Conclusions and Recommendations

The LM ECS will perform the ELOR mission with a P_s of about 0.999 if an RTG is used as the electrical power source. Some of the modifications required in the Apollo design include the addition of a space radiator, one or two No. 138 valves, an additional sublimator, a heat-pipe system, and an accumulator. Further, provisions for the replacement of a pump or motor are required.

To verify the assumptions made, a life test is required on the modified and, in particular, the quiescent control functions.

4.3.3 Guidance and Navigation Function, P/o Primary Guidance, Navigation and Control System

NOTE: Much of the information used herein was provided by AC Electronics through Reference 4.7.

System Description

The LM G&N system function remains unchanged for the ELOR; the Apollo II system will provide the required functions. The only change in operational requirement is the extended quiescent period. During this period the system will be completely off, and even the temperature control for the IMU and ASA will be provided by power-system parasitic heat as required.

Quiescent-state control is discussed under Paragraph 4.1.3 for the CM. The argument developed for CM G&N applies to the LM G&N as well, since the same systems and components are used.

The LM G&N is composed of several subfunctions in addition to those function similar to the CM. These functions and their interfaces are presented in functional block form in Figure 4-35. Included are a rendezvous radar and the landing radar.

The landing radar performs its functions prior to the extended lunar phase, its ELOR function is identical in every way with that of the Apollo LOR mission and, therefore, requires no modifications or life extension to meet the intent of the ELOR mission (See Reference 4.32).

The rendezvous radar also performs identical functions on ELOR and Apollo; however, for ELOR it must first survive the 90-day quiescent phase since it is used only on the return leg. During the quiescent phase, the systems will be off; and the antenna, which is also its heat sink, will be pointed directly into deep space and held there by its own brake. In no case, should it be pointed toward any part of the lunar surface since the accumulated heat could have a detrimental effect on the electronics.

System Analysis (G&N)

Since the functional requirements for the LM G&N are satisfied by the Apollo II system, the subsequent analysis centers around meeting the reliability/safe return and quiescent life objectives. Variations in both operational concept, redundancy, and sparing concept were considered in attempting to maximize P_s and achieve at least 0.999 for the system (this value is much higher than for Apollo). The considerations and selection criteria are much the same as used under Paragraph 4.1.3 for the CM system.

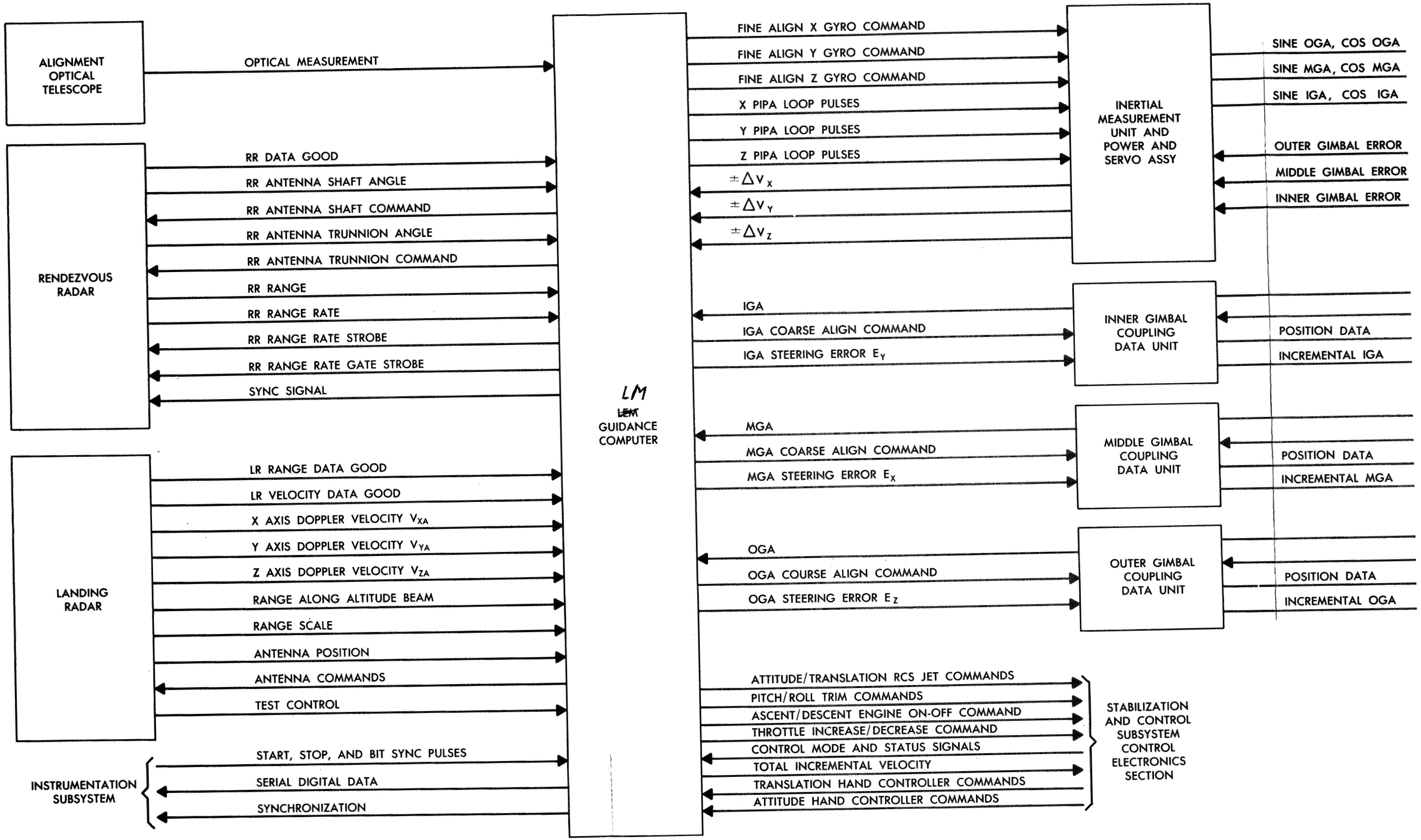

Figure 4-35. Prin

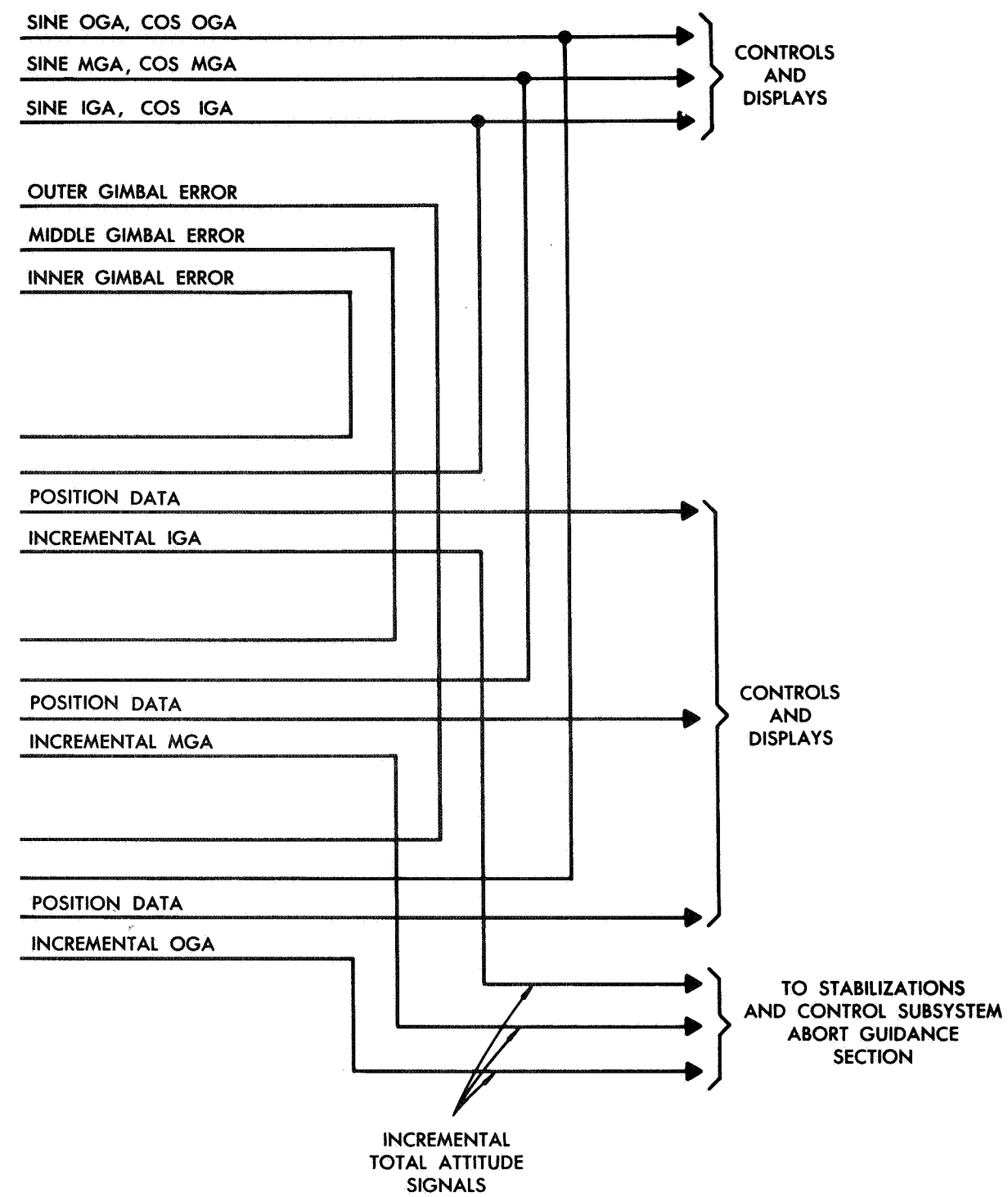

igure 4-35. Primary Guidance and Navigation Subsystem Block Diagram

Detailed duty cycle data was required to make a meaningful analysis for this system. The data from Section 2.4 of this report were, therefore, extended to provide the necessary detail. These data appear in Table 4-21. Minor modifications of the input data include reducing the prelaunch instrument heating time, adding instrument heater time during ascent and earth orbit, and adding computer time in the separate phase (6.4) when an inertial reference is desired.

The LM G&N system mechanization differs from that of the CM system in that the computer is not normally on when the inertial subsystem is in standby. The ISS standby mode only supplies heater power, but does not energize the 3,200-cycle power supplies for inertial instrument suspension. All other equipment is turned on at the same time in lunar orbit.

Table 4-21. LM G&N System Equipment Usage Times Based on ELOR Functional Requirements

LM Phase		Duration (Hours)	ISS Standby Equipment	All Other G&N Equipment
1.0	Prelaunch	100	4	0.2
2.0	Ascent	0.2	0.2	0
3.0	Earth orbit	1.5	1.5	0
5.0	Translunar	61.7	61.7	0
6.0	Lunar area	2,208.8		
6.1	Adjust orbit	2.2	2.2	0
6.3	Prepare LM	3.5	3.5	1.5
6.4	Separate	0.2	0.2	0.2
6.5	Station keeping	1.4	1.4	1.4
6.7	Descent	1.2	1.2	1.2
6.9	Landing	0.1	0.1	0.1
6.10A	Storage preparations	1.0	1.0	0.2
6.10B	Storage operations	2,187.5	2,187.5	0
6.13	Depart Preparations	4.0	4.0	1.0
6.14	Launch operations	1.0	1.0	1.0
6.15	Ascent	1.1	1.1	1.1
6.16	Rendezvous	1.0	0.5	0.5
6.20	Deactivate	4.6	0	0
	Totals		2,271.1	8.4

The LM G&N system operating and standby failure rates were obtained from the MIT report of Reference 4.8, a summary of which appears in Table 4-22. The effects of the quiescent state on failure rate is discussed in Section 2.5 Failures during these nonoperating periods are considered to present a very low probability and are inconsequential to this study.

The reliability and resulting P_s of the system was first computed using the Apollo mission ground rules, where the computer clock operates throughout the mission and the ISS is in standby. The results are reflected in Table 4-23, where the resulting P_s is shown to be nearly 0.990 (somewhat short of the desired objective). The weaknesses are created by attempting to maintain the DRM standby state, an unnecessary operation for the ELOR Mission. However, with all equipments off during the quiescent period, the P_s is estimated to be 0.993, which is better than the Apollo estimate.

There are six subassemblies with reliabilities of approximately 0.999; and if an overall system P_s of 0.999 is required, at least five of these would have to be improved. For the sake of comparison with results obtained by eliminating the standby temperature control, five spare subassemblies were considered.

The resulting overall LM G&N function $P_s = 0.999$, the desired goal. Since the ISS PSA and the DSKY have the same reliability, either could be chosen for sparing. Table 4-24 arbitrarily shows the PSA spared, but this decision would have to be based on relative ease of replacement of the two subassemblies.

Recommendations and Conclusions

The LM G&N system will perform the ELOR mission at the Apollo P_s without any significant changes. Tests on the system under simulated conditions are most desirable, particularly for the IMU; however, it seemed desirable to raise its contribution to P_s to nearly that of the other subsystem and reduce the need for MSFN backup. Some of the potential alternatives are listed in Table 4-25.

As a minimum, the change in operational concept is recommended since it will increase the system P_s to 0.993 without modifications. The function (G&N) P_s is still well over 0.999 because of the MSFN backup capability. The low weight penalty of using spares may make it an attractive alternative, particularly, since they can also be used as backup spares for the CSM. However, the logistics aspect of the problem is yet to be resolved.

Only a 90-day cold-soak, heat-soak cycle test is required for the rendezvous radar system.

Table 4-22. LM G&N System Failure Rates

LM Subsystem	Operating $\lambda \times 10^{-6}$	Standby $\lambda \times 10^{-6}$	Subassembly	Operating $\lambda \times 10^{-6}$	Standby $\lambda \times 10^{-6}$
Inertial (ISS)	395.2	1.6	IMU and PIPA electronic assembly	129	1.6
			PSA	110	-
			CDU	155	-
			D&C group	1.2	-
Optical (OSS)	39.33	-	Optical assembly	38	-
			PSA	1.33	-
Computer (CSS)	345	-	LM guidance computer - LGC	235	-
			DSKY	110	-
Rendezvous radar coupling	112	-	CDU	112	-

Table 4-23. LM G&N ELOR Mission Probability of Success, Normal Apollo Operational Concepts

LM Subsystem	$\lambda \times 10^{-6}$	T (Hours)	λT	P_s
ISS - Operating	395.2	8.4	0.003320	0.997
- Standby	1.6	2262.7	0.003620	0.996
CSS	345	8.4	0.002898	0.997
OSS	39.33	8.4	0.000330	0.9997
RR coupling	112	8.4	0.000941	0.999
Total			0.011109	0.99

Table 4-24. LM G&N System Probability of Success, Breakdown with Spares

LM Subassembly	$\lambda \times 10^{-6}$	T (Hours)	λT	P_s	Number of Spares	Equivalent λT	Equivalent P_s
IMU & PIPA electronic Assembly							
- Operating	129	8.4	0.001084	0.999			
- Standby	1.6	2262.7	0.003620	0.996			
			0.004704	0.995	1	0.000018	0.99998
PSA (ISS)	110	8.4	0.000924	0.999	1	0.000001	0.99999
CDU (ISS)	155	8.4	0.001302	0.999	1	0.000001	0.99999
D&C	1.2	8.4	0.000010	0.99999	0	0.000010	0.99999
LGC	235	8.4	0.001974	0.998	1	0.000005	0.99999
DSKY	110	8.4	0.000924	0.9991	0	0.000924	0.9991
CDU (RR)	112	8.4	0.000941	0.9991	1	0.000001	0.99999
Optical Assembly	38	8.4	0.000319	0.9997	0	0.000319	0.9997
PSA (OSS)	1.33	8.4	0.000011	0.99999	0	0.000011	0.99999
Total			0.011109	0.99	5	0.001290	0.999

Table 4-25. Summary of LM G&N System Reliability

LM G&N Function P_s	Configuration and Operational Concept
0.99	Apollo LM G&N system and operational concepts (no changes).
0.993	All equipment off during standby periods (operational change).
0.999	One spare of each of the ISS subassemblies, the computer, and the RR CDU's.
0.999	One spare of each of the ISS subassemblies, the computer, and the RR CDU's. All equipment off during standby.

4.3.4 Stability Control Function, Part of the Primary Guidance, Navigation and Control System

Functional Description

The LM SCS is divided functionally into two major sections, both of which are required throughout the manned phases, and must survive the 90-day ELOR quiescent phase. These sections are the control electronics section (CES) and the abort guidance section (AGC).

The CES consists of seven separate subfunctions, three of which are redundant in the Apollo configuration. The functions of this system remain unchanged for the ELOR mission; however, the system must survive the quiescent phase without irreparable damage. The CES provides the signals to fire any combination of the sixteen thrusters of the reaction control subsystem. Its function is to maintain vehicle stability throughout the manned mission and facilitate attitude changes when required. It is to be completely off during the quiescent phase.

The AGS provides two subfunctions, which are available throughout the mission, but are used only in event of failure in the G&N function or a subfunction thereof, thereby providing an emergency abort capability. It provides an attitude reference for vehicle stability control and a backup stability control or guidance in the event of primary system failure.

Systems Analysis and Conclusions

As is the case with other LM systems which operate only during the manned phases, the reliability of these functions and, therefore, the

contribution to P_s should exceed the Apollo mission estimate. This improvement is a result of the reduced duty cycle, about 30 hours versus 48 hours. P_s, therefore, is about 0.993.

No maintenance should be required, although it would increase the probability of a successful rendezvous if box replacement was planned. It is not recommended. Additional tests, beyond that for Apollo are considered unnecessary if the Apollo missions do not encounter failure in these systems.

4.3.5 Reaction Control System (LM-RCS)

The LM RCS is essentially the same as the SM RCS in its design, performance, and reliability. For details on both function and reliability data, see Section 4.2.2. The ELOR P_s contribution by the LM RCS is estimated to be greater than 0.99997 for each engine. The chance of a system failure is negligible, less than 1 in a million because of the redundancy within and between the RCS quads.

Compared to the Apollo LM, it is estimated that 50 pounds of additional RCS propellant is required for the ELOR mission. This requirement is based on a proportioning of the vehicle weights and inertias. The Apollo LM is currently scheduled to be launched with full RCS propellant tanks; and, based on anticipated maximum RCS usage for a nominal lunar mission, there is a margin of 125 pounds remaining at the completion of the rendezvous and docking phase. RCS fuel augmentation, therefore, is not considered necessary.

During the lunar night, it is possible for fuel to freeze in the LM RCS engine lines; however, during this period, they are not used. Further, it is not practical to maintain their temperature by means of the LM RCS engine heaters because of the large electrical energy requirement. It is recommended that the present LM heaters be turned off after landing and that the thrusters be allowed to cool to equilibrium temperature (approximately 0 to -20 F). Larger heaters (250-watt) have been added to thaw propellant feed lines during the prelaunch checkout to bring the thrusters up to operational temperatures (approximately one hour would be required for this operation). Freezing of the fuel is possible during this period, and some separation of fuel constituents could occur. Discussions with the engine manufacturer (Marquardt) have indicated that the thrusters should operate satisfactorily under these conditions. (Reference 4-15)

All RCS system components are exposed to propellants from the time of initial loading. These components are qualified for 44 days, and require tests for the longer exposure time. The RCS pressure regulator would

operate in the lock-up position throughout the lunar stay period. If leakage through the valve exceeds the specification value, the pressure-relief valve could possibly actuate, resulting in loss of helium. The addition of regulator shutoff valves is a potential means of minimizing this leakage.

In summary, no additions or modifications are projected for this system. Further, it is expected to exceed by far any reasonable requirement for its contribution to P_s.

4.3.6 Communications (LM-CS) and Status System

NOTE: Some of the information used herein was provided by RCA through Reference 4-34.

Functional Requirements

The LM CS is one of the more mission-sensitive subsystems of LM, since many of its functions are required to operate periodically throughout the 90-day quiescent period. However, failure does not affect P_s, only abort (P_a) and P_{90}. The LM communication functions and links required during the pertinent mission phases are summarized in Table 4-26 and illustrated in Figure 4-36.

During the separate, station-keeping, and descent phases a requirement exists for continual communications with both the CSM and earth MSFN. A CSM status reception mode will enable the astronauts in the LM to determine the existence of any abnormal CSM conditions which could result in a decision to abort the mission. The command link to the CSM would be employed to help execute this status check and, if necessary, reactivate the CSM to the degree of operational readiness appropriate for rendezvous in case of abort.

The remaining VHF to and from the CSM and S-band to and from MSFN during these phases and landing are the standard LM requirements associated with the Apollo mission.

During the storage preparation phase, the command and status reception links to and from the CSM will be maintained if the CSM is within line-of-sight (LOS) communication range. Normal LM S-band communications with earth will be required during this phase, except that there is no need for the ranging operation after the LM has landed.

Table 4-26. LM Communication Functions Per Mission Phase

LM Communication Function and/or Link	Applicability of Communication Function Per Phase											
	1.0	6.3	6.4	6.5	6.7	6.9	6.10A	6.10B	6.13	6.14	6.15	6.16
	Prelaunch	Prepare LM	Separate	Stationkeeping	Descent	Landing	Storage Prep	(4) Storage	Depart Prep	Launch Opns	Ascent	Rendz
Checkout	X(1)	X(1)							X(1)			
VHF link with CSM												
Command transmission			X	X	X		X	X(5)	X(5)		X	X
CSM status recognition				X	X		X	X(5)	X(5)		X	X
Ranging back-up				X(2)	X(2)			X(5)	X(5)		X(2)	X(2)
PCM data transmission					X(3)			X(5)	X(5)		X(3)	
S-band link with earth												
Data transmission			X	X	X	X	X	X	X	X	X	X
Voice transmission			X	X	X	X	X	X(5)	X	X	X	X
PRN range code Xpond			X	X	X	X		X(5)	X(5)	X	X	X
Receive voice			X	X	X	X	X	X(5)	X	X	X	X
Receive PRN range code			X	X	X	X		X(5)	X	X	X	X
Receive UDL commands			X	X	X	X	X	X(5)	X	X	X	X
VHF (EVA) +S-band (earth)												
Earth/LM/EVA voice								X(6)				
EVA/LM/earth voice +EMU								X(6)				
Communications with shelter												
LM status to shelter								X(7)				
Commands from shelter for remote control								X(8)				

NOTES:

(1) Checkout to be performed for all LM communications functions prelaunch and those feasible during prepare-LM and depart preparation.

(2) Ranging via VHF is a proposed backup to the rendezvous radar and would presumably be employed only if the radar malfunctioned.

(3) PCM data transmission would be time-shared with ranging/commands (which can be transmitted simultaneously) and would occur only when the LM is behind the moon, thus permitting communication with earth. The CSM would receive and store these data for subsequent transmission to earth upon MSFN interrogation via up-data link to the CSM.

(4) During the quiescent phase, three alternate S-band communication provisions are considered. (See text for description of Alternates A, B, and C.)

(5) Checked-out to extent possible. Links to CSM operated if the CSM is within line of sight.

(6) EVA/LM/EVA links (using EVCS equipment) are established when the astronauts leave LM for the shelter and upon return to the LM.

(7) Alternates under consideration include R. F. versus cable for this link between LM and the shelter. These alternates are discussed in subsequent sections of this report.

(8) This remote control capability is not a requirement, but is a possible alternate to manual intervention for M&R; it would eliminate the necessity of boarding the LM by astronauts until departure. VHF reception capability (aboard the LM) for such commands could be activated based on alarm-type output from LM status/monitor unit.

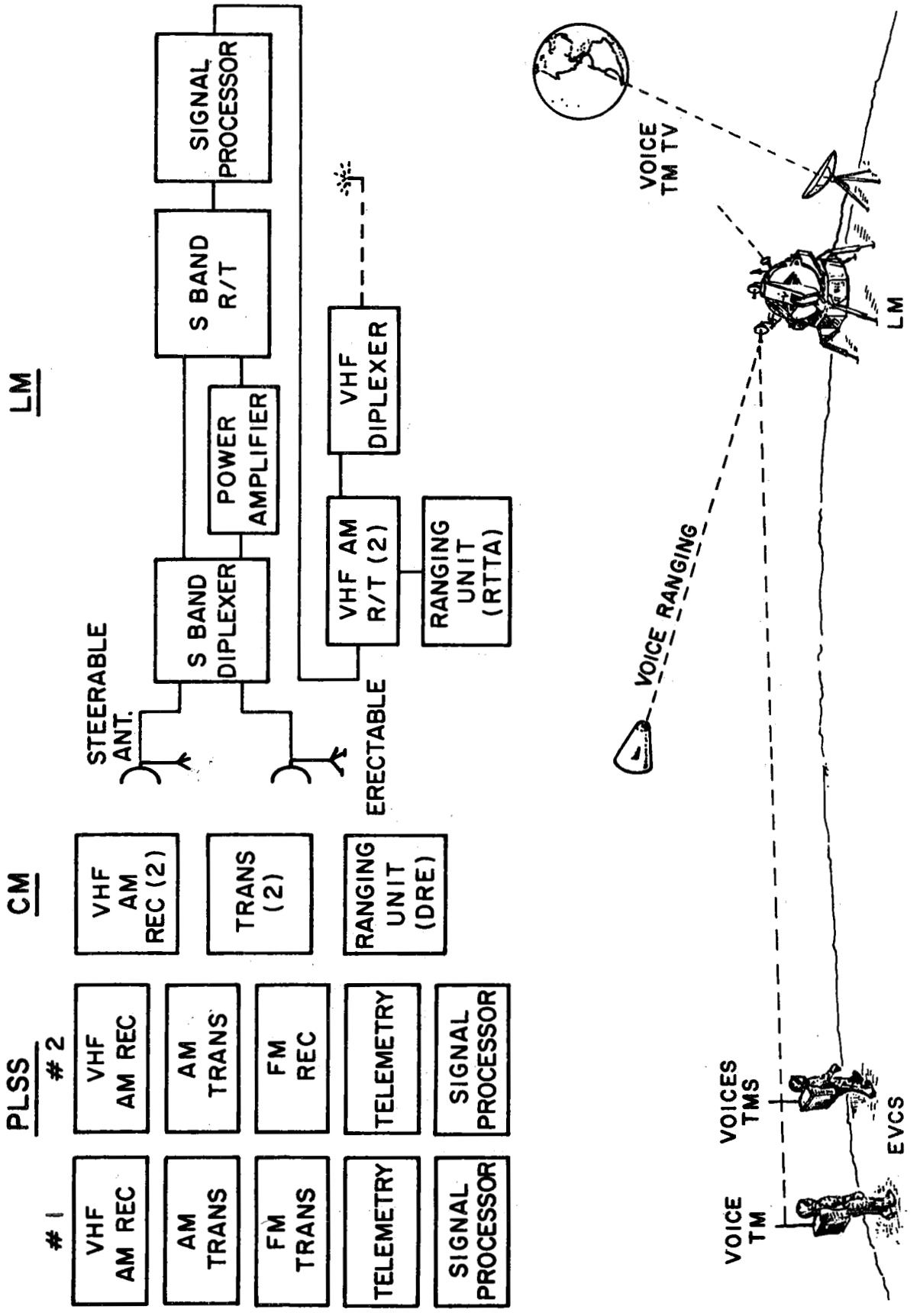

Figure 4-36. Apollo LM Communications Functional Diagram

During the period when the astronauts proceed from the LM to the shelter, it is expected that a requirement exists for continued voice communications between the astronauts and earth. This communication could be accomplished per the following procedure.

1. Two astronauts leave the LM equipped with EVC-1 and EVC-2 communications gear. This equipment would permit the two astronauts to talk to each other and to earth via the LM on a VHF/S-band relay. The third astronaut would remain in the LM to operate the LM CSS as required to maintain this relay link.

2. The two astronauts would activate the shelter CSS, which would have communications capabilities at least the equivalent of an LM CSS. This approach would establish communications between the astronauts and earth via the shelter.

3. The third astronaut would then complete deactivation of LM to the extent desired and depart for the shelter.

4. This third astronaut would also be equipped with EVC-1 gear, and the other astronaut similarly equipped (and at the shelter) would deactivate his EVC-1 gear. Thus, the third astronaut would communicate with the second (equipped with the EVC-2 unit) while proceeding to the shelter.

This procedure would essentially be reversed upon completion of the 90-day period when the astronauts return to the LM for departure.

Three alternate operational concepts are possible for activation of the LM CSS for transmission of data to earth during the quiescent phase.

Alternate A requires transmission of LM status data to earth for a 3- to 10-minute period every two hours. The transmission would be initiated automatically by an on-board programming capability. This frequent transmission rate appears excessive and results in a significant increase in the probability of failure of one or more components of the CSS. In addition, the environmental control system will have high heat loads to dissipate to maintain the low failure rate thermal limits during the lunar days.

Alternate B is similar to A, but requires just one 10- to 15-minute period of transmission of LM status data to earth each day. This lessens the on-off cycling of critical CSS units by a 12-to-1 ratio with respect to Alternate A.

Alternate C consists of checkout of the overall LM (most subsystems) approximately once every two weeks. Replacement and/or repair of LM units would be accomplished as required using spares from the shelter. Two astronauts would board the LM to accomplish this check-out, and it is estimated that the LM CSS would be operated a maximum of four hours each time for a total of six times. This system results in 24 hours of operations as contrasted with 182 hours for Alternate A. Further, it provides a comprehensive evaluation of the ability of LM to perform the return mission. If this mode is selected, it is recommended that the check-out operations be accomplished during lunar day-night transition periods when the thermal environment would provide the least hazard to the LM CSS.

For any one of the three alternates, the low data rate of 1.6 kbps provided by the LM should be sufficient for LM-Earth data transmission. This mode minimizes use of the S-band power amplifiers.

Lunar-surface exploratory missions will presumably be made by the astronauts from the shelter during the lunar stay, and a requirement will exist for maintaining voice communications and monitoring the condition of the space suits. This communication can be accomplished with the EVCS units and companion VHF transceivers in the shelter.

A requirement may exist for monitoring the LM periodically from the shelter during the quiescent phase. Control could be accomplished by astronaut boarding of LM if the monitoring indicated a need for same. The LM/shelter status-monitoring communication requirement can be satisfied by either RF or a cabling arrangement utilizing the RCA system presented in Reference 4.35.

Appendix T summarizes the anticipated information bandwidth and communication range requirements for the different portions of the ELOR mission.

Functional Description and Alternatives

The preliminary configuration proposed for the LM CSS (communication subsystem) for the ELOR mission is given in Figure 4-37. This CSS is essentially that provided for the LM for the basic Apollo mission functions, except as follows:

Intercom for Third Man. Since all three astronauts will be in the LM for the descent, landing, storage preparation, and depart preparation phases, the signal processor assembly (SPA) provisions should be expanded to permit the third astronaut to participate in intercommunications and possibly voice transmission/reception. The latter, if provided, could be time-shared between the commander and the pilot.

Command Message Generator. A command message generator (new component) would be required for derivation of the commands to be sent to the CSM.

DRG (Digital Ranging Generator). A DRG would be desirable to provide ranging (CSM LM) capability as a back-up to the LM rendezvous radar. This demand involves two minor modifications to a unit now in the CSM for the basic Apollo mission. The LM CSS for this mission contains a companion transponder unit called the RTTA (Ranging Tone Transfer Assembly).

Since the CSM will be unmanned during the rendezvous period, the LM would have to contain the DRG for this ELOR mission, and the RTTA would be included as part of the CSM CSS. A companion ranging display would have to be added to the LM. The ranging equipment exists, but the components of CSM and LM would be interchanged for this ELOR mission. It is also necessary that the computer associated with the navigation and guidance subsystem within LM be modified to accommodate the additional computations required to assist in the overall rendezvous operation based on the ranging data input.

Status Monitor and Checkout. While on the lunar surface, the LM will be periodically monitored to determine its status. Because of the nature of the mission and the extended stay-time on the lunar surface, two types of checkout should be performed on the vehicle. The first is a detailed, extended monitor of the vehicle conducted by the crew after the lunar landing and prior to ascent. The second type of checkout is a more cursory monitor of the vehicle during the quiescent phase of the mission. This function is new and requires more attention herein.

The checkout conducted during the quiescent phase is designed primarily to ascertain the status of the vehicle. These interrogations are limited to an examination of vehicle expendables and temperatures and pertinent parameters of assemblies active during the storage phase; e.g., heaters, batteries, RTG, coolant pumps, and instrumentation and communication subsystems. Since all LM electronic assemblies are designed for a five-year shelf-life, the ninety-day dormancy will not have any appreciable effect on the performance, provided the specified temperatures are maintained. For this reason, assemblies not required for the processing and transmitting of the data, will not be activated during these checkouts. The performance of the nonactive assemblies will be determined during the detailed checkout performed prior to ascent.

Parameters selected to be monitored during these interrogations (listed in Table 4-27) provide for a gross status evaluation of the vehicle and expendables but do not contain data for trouble-shooting. In the event

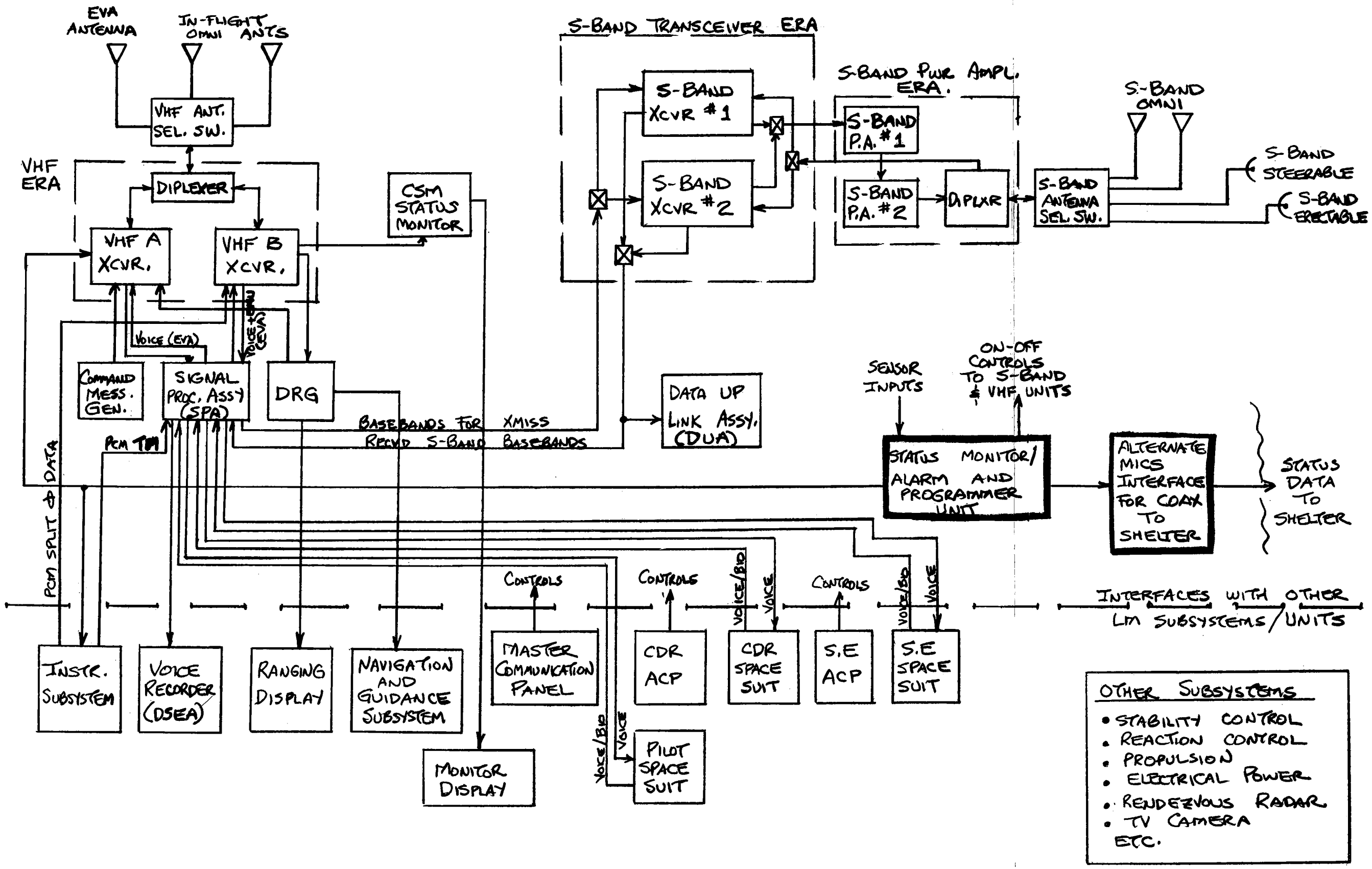

Figure 4-37. Proposed LM CSS Configuration and Interfaces for ELOR Mission (Preliminary)

Table 4-27. Quiescent-State Monitoring Points, Bit Requirements, LM Vehicle

Subsystem	Parameter	Number of Measurements	Bits
GN&C	IMU heater on	1	1
	IMU temperature	1	8
	ASA temperature	1	8
	RR temperature	1	8
	PIPA temperature	1	8
Comm.	Transceiver power output	2	16
	Antenna electronics temperature	1	8
	Receiver AGC	2	16
EPS	Battery voltage	9	72
	temperature	9	72
	current	9	72
	RTG voltage	1	8
	temperature	2	16
	current	1	8
	Bus voltage	2	16
ECS	Coolant temperature	2	16
	Pump delta-P	2	16
	Valve position indicator	4	4
	H_2O quantity	2	16
	Oxygen temperature	2	16
	pressure	2	16
	Glycol quantity	1	8
Propulsion	Oxidizer pressure	3	24
	temperature	3	24
	quantity	1	8
	Fuel pressure	3	24
	temperature	3	24
	quantity	1	8
	He temperature	3	24
	pressure	3	24

Table 4-27. Quiescent-State Monitoring Points, Bit Requirements, LM Vehicle (Cont)

Subsystem	Parameter	Number of Measurements	Bits
RCS	Heaters	4	32
	Oxidizer pressure	2	16
	temperature	2	16
	quantity	2	16
	Fuel pressure	2	16
	temperature	2	16
	quantity	2	16
	He pressure	2	16
	temperature	2	16
Totals		93 Analog 5 Discrete	744 5 749

an anomaly is detected, a worker would return to the vehicle; activate the affected assembly; switch the PCM to the hi-bit rate; and in conjunction with MSFN, conduct an in-depth assessment of that area. Based upon the analyses of these data, a decision can be made on what, if any, alterations to the mission plan are required.

A schematic diagram of the configuration required for the quiescent-phase checkout is shown in Figure 4-38. These checkouts will be performed automatically upon command; and unless a malfunction or abnormal condition is detected, the astronauts will not participate. A command receiver, which has been added to provide for the automatic checkout, remains active during the entire quiescent phase. It is used primarily to activate the assemblies required for the checkout. The command receiver assembly (CRA) is completely compatible with the up-data link (UDL) (Section 4.1.7) operating with a similar command format. After activation of the UDL by the CRA, the UDL assumes control of the checkout sequences, activating and deactivating transducers and assemblies upon command from MSFN. After completion of the checkout, all conditioning, encoding, and transmitting assemblies are deactivated, and only the CRA remains active.

A CRA was selected in lieu of a timer and sequencer assembly because it provides more flexibility to MSFN. By including a CRA on the vehicle, MSFN has the capability of extending a checkout or changing the frequency or interval between checkouts - a very important consideration in the event an impending malfunction is detected.

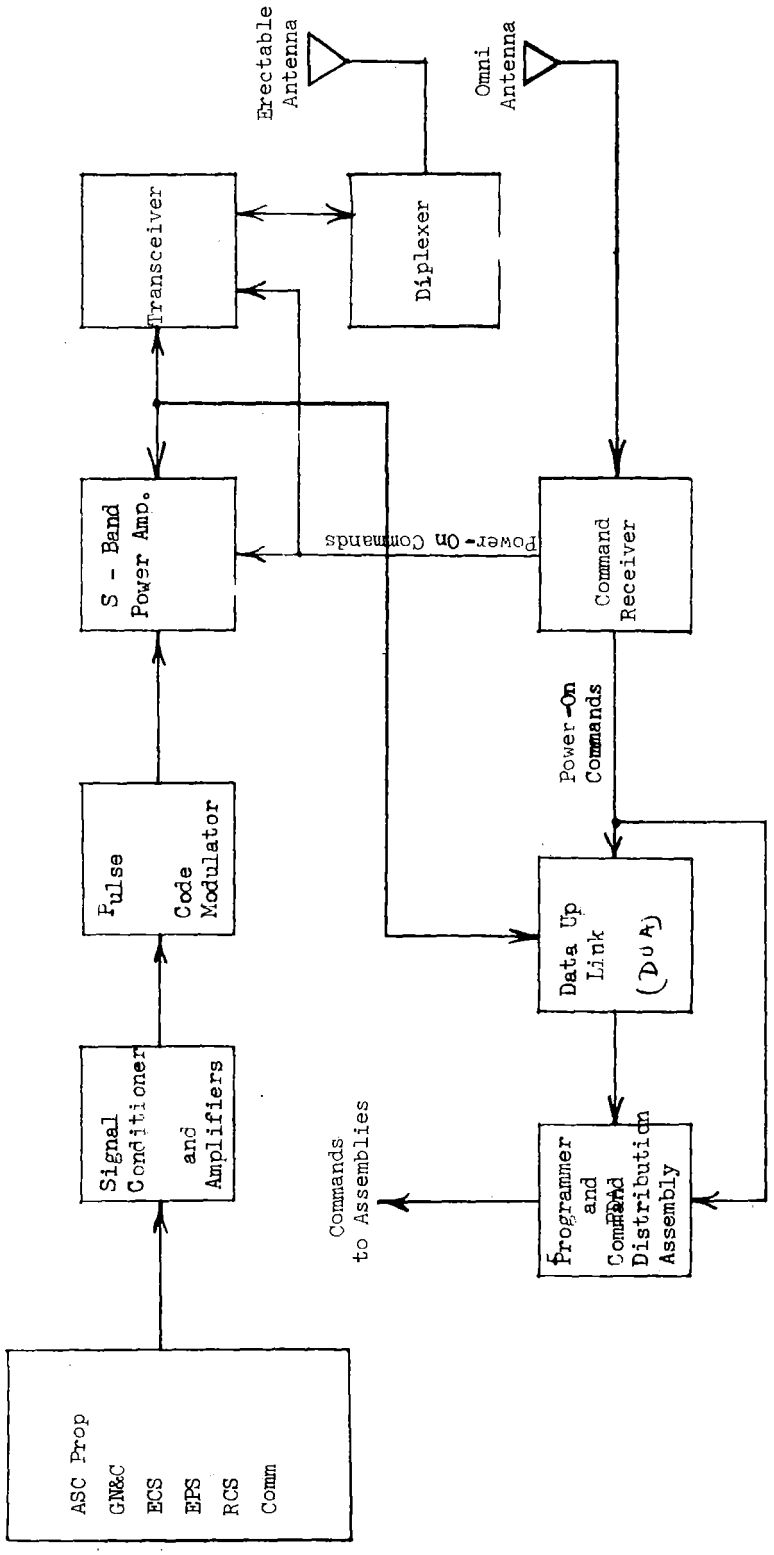

Figure 4-38. LM Vehicle Quiescent-Phase Checkout Configuration

The signal-conditioning assemblies are to be modified so that only one assembly requires activation during checkout. The conditioning subassemblies associated with the parameters monitored during the checkout will be located in one assembly. Table 4-28 demonstrates that the low-bit-rate PCM (1.6 kbps) will be adequate for these checkouts. By using the low rate and the erectable S-band antenna, the S-band power amplifiers will not have to reposition the erectable antenna every few days to ensure communication lockup.

Table 4 28. PCM Low-Bit Rate

	Analog Signals	Discrete Signals	Total Bits
Capacity	154	368	1600
LM taxi utilization			
Identification synchronization and time		72	72
Calibration and oscillation failure detection	4	1	33
Redundancy	37	120	416
Quiescent storage monitoring	93	5	749
Total	134	198	1270
Available for growth	20	170	330

Data Rate:	1.6 kbps
Code:	Phase-shift keyed
A/D Conversion:	8 bits
Resolution:	0.40 percent

Direct cabling between LM and the shelter may be considered rather than an RF link for increased reliability. (The cabling would presumably be included as part of the shelter payload equipment landed on the moon prior to the LM landing.) Preliminary study indicates that the VHF link should be utilized rather than the cabling provisions, as it eliminates the space and weight penalty of 1,000 feet of cable for the shelter payload. If however, other considerations and a detailed reliability analysis keep the cabling

alternate in contention, the RCA concept described in Reference 4-35 should be considered. The approach utilizes one coaxial cable between terminals, and the data is transferred via subcarriers in an frequency-division modulator, time-division modulator, or combination system.

Command Module Remote Control. A remote-control command/data link with the CM has been included in the LM ELOR configuration to provide -

1. Control of the operational mode of the CSM while in the quiescent state (may not be required).

2. Changes in attitude-control mode for final rendezvous and docking.

3. Initiating the quiescent-state control mode after LM departure.

Implementation of the command/data link requires the addition of a command generator and processor, a data processor, and a display console in the LM and the addition of a receiver/UDL interface assembly and command distribution assembly in the CM. To avoid conflict with ground generated commands, it is anticipated that the LM/CM command/data link will not use the S-band telemetry link. The VHF transceivers are the recommended mode, a schematic diagram of the configuration is shown in Figure 4-39.

An alternate approach would be to employ a UHF command data link. This configuration would require the addition of a UHF transceiver on the LM taxi and the CM, replacement of the in-flight VHF antenna with combination VHF/UHF antennas or addition of simple UHF antennas, and modification of the CM UDL to accept commands from the UHF receiver. In any of these configurations, it is anticipated that the UDL in its present format will be retained because of its low probability of accepting a wrong command.

Commands are transmitted to the CM on the VHF baseband utilizing a command format identical to that presently used on the LM. This format is a two-tone composite modulating signal; command information is contained on a 2-kHz tone and timing and synchronization is provided by a 1-kHz tone.

CM status data will be transmitted to the LM taxi on the VHF link using the low-bit-rate PCM format. Since the LM VHF transmitter has the capability of transmitting low-bit-rate PCM data, the CM may require modification to include a LM transmitter. All the displays and controls required for status monitoring and docking of the CM must be added to the LM display console. The command processor converts commands generated in the display console into a format suitable for transmission. Signal

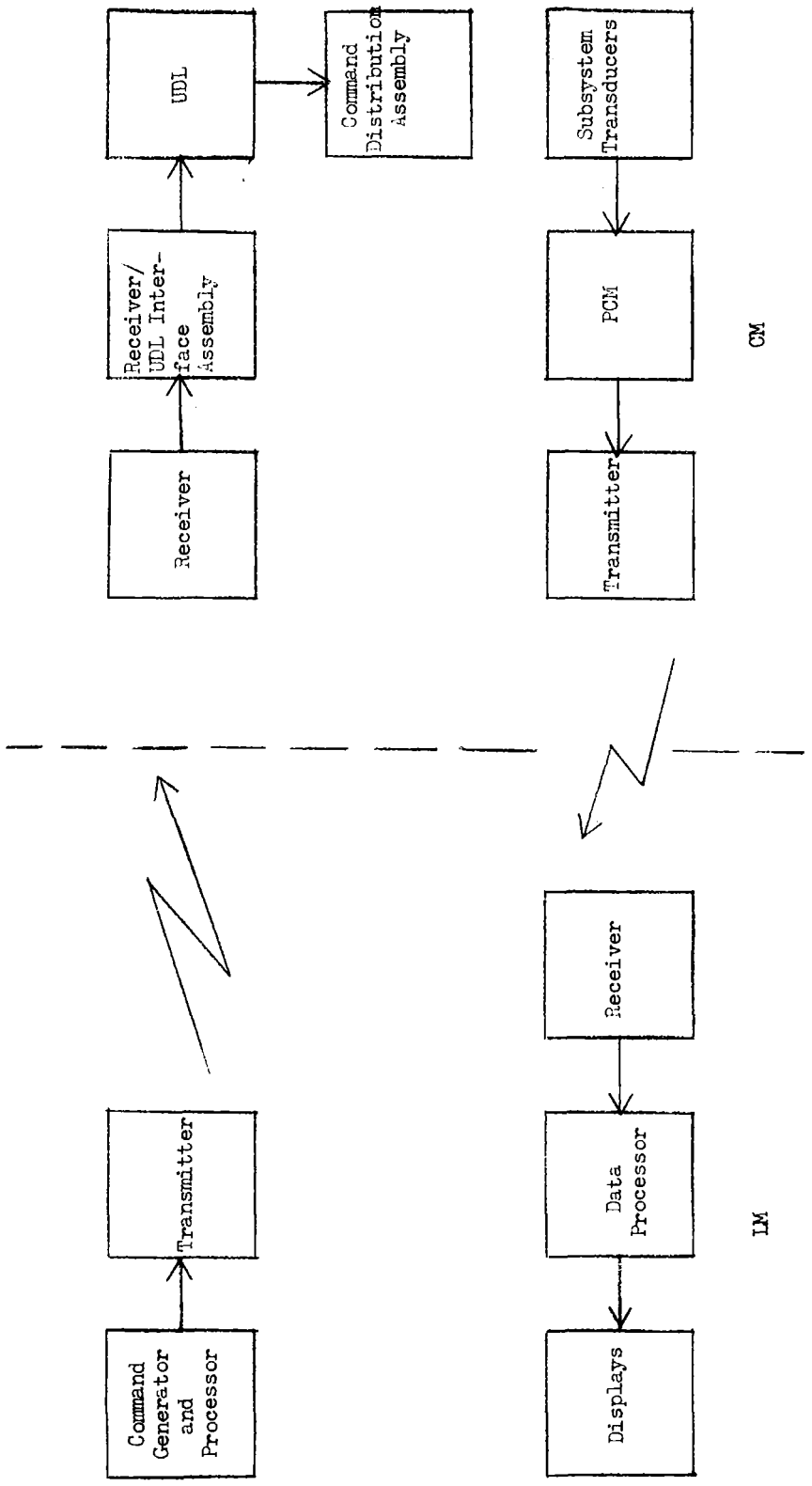

Figure 4-39. LM/CM Command/Data Link

conditioning subassemblies, analog-to-digital converters, and command address and word generators convert display panel switch closures into voltage pulses, convert analog input signals to the correct voltage range, and provide for ground isolation between assemblies. The analog multiplexer converts analog input signals into 8-bit digital words. The command generator supplies vehicle and subsystem addresses and converts the input signals into the proper sequence of one and zero sub-bits for use by the UDL. The oscillator generates the 1-kHz reference tone and an in-phase and out-of-phase 2-kHz waveform. The programmer provides timing pulses to sequence the commands through the assembly. To preclude any delay in the transmission of a command, the programmer initiates its sequences upon receipt of a command.

The PCM data processor converts the 1.6-kbps PSK data train into discrete and analog signals. The decommutator culls bits constituting those parameters selected for display. The digital-to-analog converter (D/A) reconstitutes the analog signals, while the signal conditioner provides for ground isolation and impedance matching.

The VHF/UDL interface assembly, located on the CM, shapes the composite modulated signal received by the VHF receiver into a format compatible with the encoder section of the UDL. The assembly amplifies the incoming signal and provides for ground isolation and impedance matching.

This configuration is adequate for the LM mission if the LM-CM command/data link is limited to attitude control commands and a limited monitor of CM subsystems. Any significant expansion of the capability of the link, such as providing for control and monitor of all subsystems and the ability to command and guide the CM to a lower orbit, would require redesign of many areas of the system.

Specifically, if complete monitoring of the CM by the LM is desired, the high bit rate (51.2 kbps) will be required. This approach will eliminate the possibility of using the VHF transmitters, since these assemblies cannot handle the high bit rate. The link would then have to use the S-band transmitters, modified to permit simultaneous transmission of commands to the CM and voice and data to MSFN or develop new wide-band UHF transmitters and receivers.

Subsystem performance figures and duty-cycle estimates are presented in Appendix U.

In summary, the LM-VHF equipment would be used as follows:

1. During in-flight phases -

   a. Simultaneous transmission of commands/ranging (VHFA) and reception (VHFB) of CSM status/ranging. (Simultaneous communications of two types of information each way would be accomplished by the same technique used for simultaneous voice/ranging for the basic Apollo mission.)

   b. Transmission (VHF B) of PCM split-phase data to the CSM per operation in a basic Apollo mission. (This transmission would have to be time-shared, however, with the command/ranging transmission.)

2. During lunar-stay phases -

   a. Transmission of commands to the CSM and CSM status reception during the quiescent preparation and depart preparation phases.

   b. Relay transmission (VHF A) of voice (received via S-band from MSFN) to the astronauts while they are proceeding to or from the shelter, and reception (VHF B) of voice and EMU (extravehicular mobility unit) data from the astronauts for relay via S-band to MSFN. (This requirement does not conflict with the foregoing as they occur at different times.)

   c. Periodic transmission (VHF A) of LM status data to the shelter or an alarm whenever critical parameter limits are exceeded. (Remote control could be provided, by use of a VHF B link shelter/LM and a demodulator/decoder that could interface with the UDL.)

The 5-watt average output level for the VHF transmitter is far in excess of the power level required for narrow-band data communications to the shelter, which is expected to be no more than 1,000 feet from the LM.

The companion VHF transceivers would be required in the shelter for communication with the astronauts (using EVCS) during lunar surface exploration periods; therefore, the VHF link LM/shelter does not impose an additional equipment requirement upon the shelter.

Systems Analysis

The criterion used for determining redundancy, failure detection, and spares provisions for the LM CSS proposed herein was that the probability of survival of the communications capability for the ELOR mission should be at least equal to that provided for the basic Apollo mission.

Since the operation of the communications subsystems is essentially identical during in-flight periods for the two missions, the reliability and maintainability analyses focused on the operational differences brought about by the extended lunar stay period, which affects the probability of abort (P_a) and P_{90}.

The Apollo DRM called for nearly continuous LM communication for the 35-hour stay on the lunar surface. By way of contrast, the ELOR mission will require these same systems to operate for only a few hours while manned. Were it not for the requirement to assess LM status, the reliability and, therefore, P_{90} would be much higher for ELOR than for the Apollo mission; therefore it is obvious that P_{90} is limited by the systems involved in quiescent-state monitoring. Since the system does not affect crew safety, it will have negligible effect on P_s.

Table 4-29 identifies possible losses of capability that could be critical (i.e., causing mission abort or otherwise hazardous) or cause reduction in mission effectiveness. Lunar-stay maintenance and repair efforts should be such as to prevent such situations by early detection and replacement with a spare or to minimize their consequences. The table also identifies the failures that must be detected (1) immediately; (2) within some period, such as a week; or (3) before the end of lunar stay to permit repair prior to departure. In addition, the maintenance time constraints are given to assist in the identification of maintenance and repair procedures, sensors, alarms, etc., needed during lunar stay.

Failure probabilities are summarized in Appendix V for the individual subsystem components, electronic rack assemblies, and complete LM communications subsystem for both the basic Apollo and ELOR missions. Included on the three different concepts, corresponding to the A, B, and C alternates for operation of the CSS during the quiescent phase described previously, a summary of the results is presented in Table 4-30. From these data, Alternative B seems to be the most appropriate because it requires only two potential maintenance actions and provides the highest probability of no abort and (P_{90} = 0.998) for the least weight on the lunar surface.

NOTES:

1. The audio centers are considered redundant in the evaluation of the critically of the loss of either one.

2. The PM modulator exciter, S-band receiver, S-band power supply, and S-band power amplifier are redundant; therefore, one of each could fail without loss of mission capability. Also, the S-band omnidirectional antennas are back-up to the steerable antenna for certain narrow-band communications modes.

3. These items are considered critical because the VHF ranging function is needed for rendezvous if the rendezvous radar failed.

4. During storage, CSM status monitoring is accomplished from the shelter.

LM Communication Subsystem or EVCS Component	Most Severe Failure Effect During or After ELOR Lunar Stay			
	Critical for Successful ELOR Mission (Abort Required)	Not Critical		Imn Se
		Serious Loss of ELOR Capability	Not Serious Loss of ELOR Capability	
VHF				
VHF A transmitter	X(3)			
VHF A receiver			X	
VHF B transmitter			X	
VHF B receiver	X(3)			
Diplexer	X(3)			
VHF antenna select switch	X(3)			
VHF in-flight antenna (1 or 2)	X(3)			
Signal processor				
Audio center No. 1	X			
Audio center No. 2			X(1)	
PMP	X			
Command message generator	X			
CSM status monitor	X			
S-band transceiver				
PM mod (1 or 2)			X(2)	
FM mod			X	
Exciter (1 or 2)			X(2)	
Receiver (1 or 2)			X(2)	
Power supply (1 or 2)			X(2)	
S-band power amplifier				
Power (1 or 2)			X(2)	
Power supply (1 or 2)			X(2)	
Diplexer	X			
S-band antenna select switch	X			
S-band omni antenna (1 or 2)			X(2)	
S-band steerable antenna		X		
S-band erectable antenna		X		
Digital ranging generator	X(3)			
Storage monitor/alarm and programmer unit	X			
EVCS (LM external)				
EVC-1		X		
EVC-1A		X		
EVC-2		X		

Table 4-29. LM CSS Component Criticality

During ELOR Lunar Stay							
Required Detection Capability Replacement Criteria							
nediate nsing	Within a Week	Can Wait Toward End of Lunar Stay	None	Immediate or Automatic Switching	Within a Week	Can Wait Toward End of Lunar Stay	None
		X				X	
		X				X	
		X				X	
		X				X	
		X				X	
		X				X	
		X				X	
		X				X	
		X				X	
	X				X		
		X				X	
		X(4)				X(4)	
	X				X		
	X				X		
	X				X		
	X				X		
	X				X		
	X				X		
	X				X		
	X				X		
	X				X		
	X				X		
	X				X		
	X				X		
	X				X		
		X				X	
X				X			
	X(daily)				X(daily)		
	X(daily)				X(daily)		
	X(daily)				X(daily)		

Table 4-30. Summary of ELOR Communications P_a Alternatives

Alternatives	λT	Reliability	Spares	P_a
A	0.0171	0.98	3	0.998
B	0.0137	0.99	2	0.998
C	0.0147	0.98	2	0.997

Conclusions and Recommendations

Based on failure probability analysis, spares recommended for the ELOR mission, Alternates A, B, and C are as follows:

Alternate A: EVC-1, EVC-2, SPA

Alternate B: EVC-1, EVC-2 (the recommended concept)

Alternate C: EVC-1, EVC-2

A space storage monitor/alarm and programmer unit (SMAP) may also be required because of its critical function of monitoring LM status. Its failure must be detected quickly and corrected so that LM status monitoring can be restored.

The VHF ERA command message generator and DRG appear to be reliable and dormant during lunar stay; therefore, they need not be spared.

S-band capability is essential, but the existing redundancy appears adequate for the ELOR mission.

Packaging of shelter CSS units should be identical with that of the LM CSS units whenever possible so they can serve as spares for the LM if needed at the time of departure.

Further reliability and maintainability studies are recommended to consider detailed overall mission and CSM, LM, shelter operations in more detail; to define the needed maintenance support equipment, procedure, sensors alarms; and to establish the validity of, or necessary modifications to, the assumptions and ground rules used in the analyses. In particular, the failure-rate estimates must be confirmed on the basis of test data derived under similar or actual conditions conducted for a similar period.

Most of the components of the proposed LM communications subsystem are either space-qualified or in the process of being space-qualified, as in the case of the DRG. Exceptions are new units, which include:

1. Command message generator

2. CSM status monitor

3. Storage monitor/alarm and programmer unit

4.3.7 Ascent Propulsion System

System Analysis

The addition of a third crewman to the vehicle requires ascent propulsion augmentation to maintain existing Apollo return payload and rendezvous orbit requirements. Up to 750 pounds of additional propellant can be stored in modified tanks which will extend the ascent engine burn-time from 460 to 510 seconds. Preliminary investigation of the ability of the engine to meet the extended burn-time indicates that it can do so without modification. Several LM development ascent engines have had total burn-times well in excess of the expected 510-second ELOR burn-time.

The increased pressurant for the larger ascent tanks, if required, could be provided by adding one RCS He tank to each ascent He pressurant leg.

The ascent pressurization section is protected from propellant vapors by squib-actuated valves located just downstream of the helium check valves. These valves protect all pressurization components until the ascent engine is fired. After ignition, exposure of these components to propellants (vapors, liquids, or reaction products) is not expected to exert a deleterious effect on the engine or its life.

A recommended approach for increasing the capacity of the ascent propellant tanks is to convert the 49.5-inch, diameter hemispherical heads into ellipsoidal shaped heads with a minimum-weight 1.414 a/b ratio. A cylindrical seqment, 49.5 inches in diameter by 14.5 inches long, can be inserted between the heads to maintain existing tank pickup locations. These tanks (fuel and oxidizer) are capable of carrying up to 750 pounds of extra propellant, all of which may not be required for ELOR. The advantage of this approach is that no major vehicle structural reconfiguration is required.

The use of large-diameter tanks is considered impractical, since the present oxidizer tank is within 3/4 inch of existing structure, and any increase in the diameter of the tank requires relocating it outboard to clear this structure. To maintain vehicle mass balance, a shift in the oxidizer tank dictates a corresponding shift of the fuel tank. The resulting growth and outboard shift of the tanks would require significant structural modifications.

The ascent engine would be enclosed with one layer of mylar (0.2 mil thick) to minimize cabin heat leak through the engine. This covering would be either removed prior to ascent or vaporized upon engine ignition. The propellants, components, and engine would be maintained at their normal LM temperatures through general spacecraft thermal control.

System Reliability and Qualification Status

The proposed increase in engine burn-time is less than 10 percent. This increase and other changes are not expected to impose any significant detrimental effects on the system contribution to P_s, which should be in excess of 0.995 without any form of maintenance. (Reference 4-31)

Some components such as the pressure relief valves, engine valves, sensors, and plumbing, are exposed to propellants at all times; consequently, the increase in mission exposure time will require requalification to extend the assured exposure life limits.

4.3.8 Structure and Crew Systems

Micrometeoroid and Thermal Shields

The LM ascent stage has an outer aluminum alloy shield with a minimum thickness of 4 mils for micrometeoroid protection. This shield is also used as the outer thermal shield and operates in conjunction with a multiple radiation-foil insulation blanket. The blanket consists of 25 layers of 1 1/2-mil aluminized mylar with two external layers of aluminized H-film, one on each side, for handling purposes. This assembly of thermal/micrometeoroid shielding is supported from the base structure by a series of fiberglass standoffs as shown in Figure 4-40. Addition of extra layers of aluminized mylar thermal shielding and thickening of the existing 4-mil outer thermal/micrometeoroid shield is desirable to reduce the probability of a meteroid function to below the Apollo criteria and to decrease the heat loss through the thermal shield and, thereby, the electrical power requirements. These modifications have very minor impact on cost and schedule.

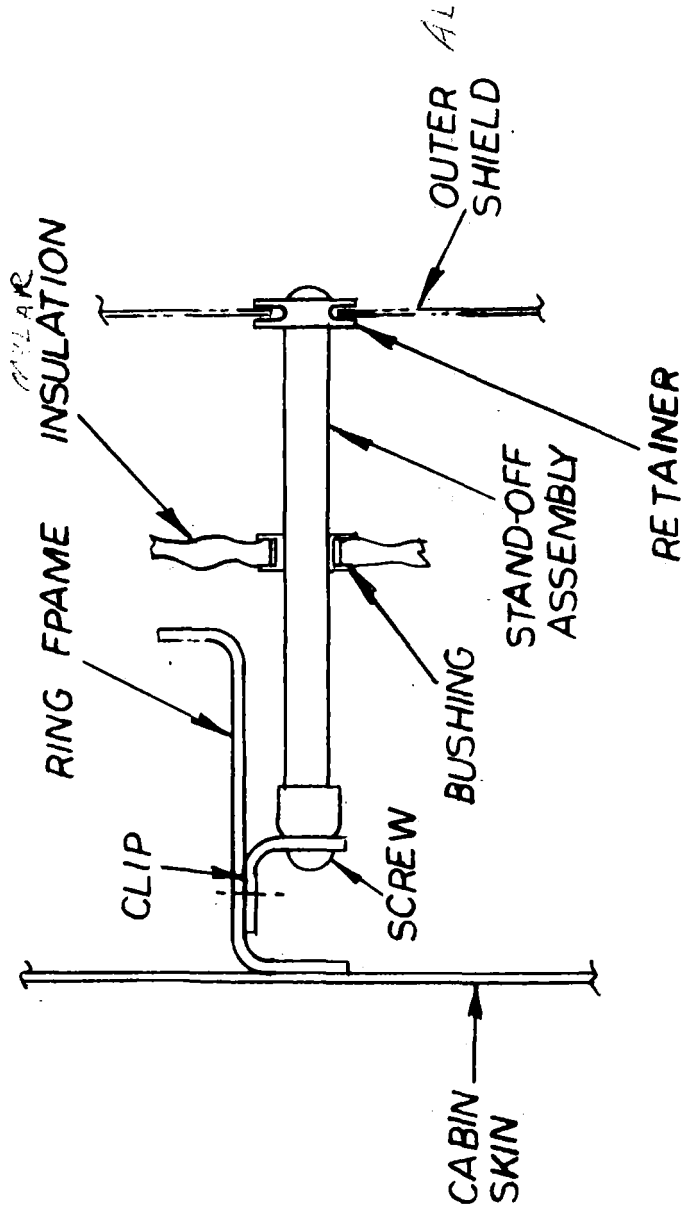

Figure 4-40. Typical Thermal Shield Support, A/S Cabin

Radiator Support

Active thermal control for the daytime periods of the 90-day storage phase is accomplished by the addition of a 20-square-foot horizontal radiator (Figure 3-4). This radiator is located at the top of the ascent stage and replaces the existing outer micrometeoroid shield. The radiator would provide micrometeoroid protection as well as thermal control. A contamination-protection sheet installed on the radiator must be removed prior to activation of the radiator. A 32-inch-diameter hole in the center of the radiator permits the docking tunnel structure to protrude above the radiator level. A rigid support for the radiator is provided by the docking tunnel structure and the upper ascent stage beams. This support has no effect on the structural reliability.

Cabin Seals

The existing LM rivet, window, and hatch seals are capable of withstanding temperature variations greater than 0 to 200 F; and since the cabin temperature must be held between 40 and 100 F for other components (40 F for water and 100 F for batteries), the cabin seals are not considered to be a problem area even for the extended exposure time. Reliability is also unaffected.

Crew Provisions

Figure 3-5 is an inboard profile of the three-man augmented LM and shows the position of the third crewman. Structural changes for the new crew station include the addition of a seat on the ascent engine cover, side cabin structure supports for restraint system tiedowns, and a protective cushion in the area of the upper docking tunnel. New support structure is also provided for stowing an additional PLSS back-pack in the forward cabin area. Again, no degradation in structural reliability will be created by the presence of the third crewman. The structural design margins are expected to be such that the additional weight will have no measurable effect on the assessment of P_s for the ELOR mission.

4.3 THE LUNAR MODULE ASCENT STAGE SYSTEMS

LIST OF ABBREVIATIONS

AEP	Ascent Electrical Power
LM-ECS	Environmental Control System
ARS	Atmosphere Revitalization Section
HTS	Heat Transport Section
WMS	Water Management Section
PLSS	Portable Life Support System
OSS	Oxygen Supply Section
ASA	Abort Sensor Assembly
LM-G&N	Guidance and Navigation System
IGA	Inner Gimbal Angle
MGA	Middle Gimbal Angle
OGA	Outer Gimbal Angle
CGC	Command Guidance Computer
RR	Rendezvous Radar
LR	Landing Radar
LM-SCS	Stability Control System
CES	Control Electronics Section
AGS	Abort Guidance Section
LM-RCS	Reaction Control System
LM-CSS	Communications and Status Systems
LOS	Line of Sight
PRN	Pseudo Random Noise
EMU	Extravehicular Mobility Unit
RTTA	Ranging Tone Transfer Assembly
R/T	Receiver and Transmitter
EVCS	Extravehicular Communications System
EVC	Extravehicular Communications
DRG	Digital Ranging Generator
D/A	Digital to Analog
A/D	Analog to Digital
SPA	Signal Processor Assembly
CRA	Command Receiver Assembly
SMAP	Storage Monitor/Alarm and Programmer
APS	Ascent Propulsion System

4.4 LUNAR MODULE DESCENT STAGE SYSTEMS*

NOTE: Some of the information used herein was provided by Grumman Aircraft Engineering Corporation through References 3.3 and 4.37.

This section is an analysis of the lunar module descent stage (LM DS) systems as they are affected by the extended mission requirements. Details are presented only where changes were projected. The aspects associated with systems integration are presented in Section 3.5.

4.4.1 Quiescent Electrical Power

NOTE: Much of the information used herein was provided by contributing subcontractors:

1. General Electric Co. through Reference 4.18
2. Pratt and Whitney through Reference 4.16
3. Allis-Chalmers through References 4.17 and 4.36.

Requirements

The LM electrical power requirements from earth launch to pre-ascent preparation are supplied by the descent stage section of the EPS, and the lunar-ascent power requirements are supplied by the ascent stage section. Thus, the modifications to the standard LM EPS configuration required to implement a three-man 90-day LM, for the most part, affect the descent stage EPS. The electrical power required by the ascent stage for ascent from the lunar surface, rendezvous, and docking are provided by batteries and is discussed in Section 4.3.1.

The electrical energy requirements for the descent stage power supply are given in Table 4-31. The 12.8 kw-hr required for the earth launch, lunar descent, and pre-ascent preparation are supplied by the descent batteries. A minimum of three descent batteries are carried to supply the peak power required to support the lunar descent phase. The electrical power requirements for the quiescent phase are given in Table 4-32. For purposes of this analysis, the worst case for this phase is assumed to cover three lunar days (42 earth days), three lunar nights (42 earth days), and six additional earth days of lunar nights, totaling 90 earth days. The electrical energy requirement for the 90-day quiescent phase is approximately 336 kw-hr.

*A foldout sheet listing abbreviations used in Section 4.4 and their meanings is located at page 275.

Table 4-31. Electrical Energy Requirements, Descent Stage, LM

Mission Phase	Energy (Kilowatt-Hours)
Earth launch to transposition	0.68
Lunar descent and checkout	8.34
RTG or solar cell array setup	2.00
Lunar quiescent storage	336.24
Pre-ascent preparation	1.80
Subtotal (Excluding quiescent storage)	12.82
Total	349.06

The average power required is expected to be between 75 and 114 watts depending on whether or not some or all of the projected heaters are actually required.

The weight of an EPS configuration composed entirely of descent batteries to provide this energy is approximately 4580 pounds. Since such a system weight is prohibitively high, the following alternative configurations were considered:

1. Radioisotope thermoelectric generator (RTG)(SNAP-27) and descent batteries

2. Solar cell array and descent batteries

3. Fuel cell(s) and descent batteries

Since batteries will satisfy the LM descent stage requirements for all phases except quiescence, the remainder of this analysis is devoted to the quiescent lower function, which contributes to mission probability of abort, P_a, not safety P_s.

System Alternatives

The RTG Configuration. The RTG configuration consists of one SNAP-27 RTG plus eight LM descent batteries modified to provide 90-day wet-life operation and a limited number of recharge cycles. As shown in Table 4-32, the average power for the RTG configuration is substantially lower during the lunar night than that for the solar array and fuel-cell configurations, because the RTG waste heat (see Section 4.3.2) provides the 500-Btu/hr (148-watt) cabin-heat requirement. In the solar array and fuel cell configurations, this heat must be provided by electrical heaters.

Table 4-32. Three-Man, 90-Day Quiescent LM Requirements for Electrical Power (LM QEPS)

Subsystem	Equipment	Day Mission			Night Mission With RTG			Night Mission Without RTG		
		Power (Watts)	Duty Cycle (Percent)	Average Power (Watts)	Power (Watts)	Duty Cycle (Percent)	Average Power (Watts)	Power (Watts)	Duty Cycle (Percent)	Average Power (Watts)
ECS	Glycol pump	30.5	25	7.6	30.5	25	7.6	30.5	25	7.6
	Water tank heater	-	-	-	-	-	-	5	100	5*
	Thermal sensor	1.0	100	1.0	1.0	100	1.0	-	-	-
CP	Exterior lights	-	-	-	150	1	1.5*	150	1	1.5*
Instr.	PCMTEA	11.0	1.67	0.2	11.0	1.67	0.2	11.0	1.67	0.2
	Signal conditioner unit	28.4	5.83	1.7	28.4	5.83	1.7	28.4	5.83	1.7
	Sensors	3.9	5.83	0.2	3.9	5.83	0.2	3.9	5.83	0.2
GN&C	Rendezvous radar antenna heater***	-	-	-	81	17	13.7*	81	17	13.7*
	IMU heater***	60	22	13.2	60	22	13.2	60	22	13.2
	ASA heater	54	13	7.0	54	13	7.0	54	13	7.0
	Program coupler assembly	14	5.83	0.8	14	5.83	0.8	14	5.83	0.8
	Power-distribution assembly	12	5.83	0.7	12	5.83	0.7	12	5.83	0.7
Comm.	S-band transceiver	36	5.83	2.1	36	5.83	2.1	36	5.83	2.1
	S-band antenna heater	-	-	-	51.7	50	25.9*	51.7	50	25.9*
	Signal processor assembly	4.3	5.83	0.3	4.3	5.83	0.3	4.3	5.83	0.3
	Command receiver	5.0	100	5.0	5.0	100	5.0	5.0	100	5.0
	Digital uplink assembly	12.5	5.83	0.7	12.5	5.83	0.7	12.5	5.83	0.7
EPS	Descent stage battery ECA's	20	100	20	20	100	20*	20	100	20*
	Power control unit	5	100	5	5	100	5	5	100	5
	(Cabin heating)**				0	0	0	variable	variable	103.5
	Subtotal			65.5			106.6			214.1
	Distribution loss (7-1/2 percent)			4.9			8.0			16.1
	Total			70.4			114.6			230.2

(*)Loads that do not contribute to the cabin heat requirement.

(**)Total cabin heat required = 148 watts; net = 148 watts minus 44.5 watts (loads of cabin equipment contributing to cabin heat) = 103.5 watts

(***)May not be required.

Figure 4-41 shows the electrical power profile for a typical 28-day light-dark lunar cycle during the quiescent phase. When the power requirement is above the output power level of the RTG, the batteries supply the difference in power; and when the power requirement is below the output power level of the RTG, the batteries are recharged by the RTG. Figure 4-42 shows the total stored energy requirement as a function of RTG output power levels from 65 watts to 90 watts.

The output power of a standard SNAP-27 RTG is 67 to 71 watts. From Figure 4-42, a 67-watt RTG requires seven descent batteries to supply the required peaking power. Another battery has been added for redundancy. Another alternative is to use two SNAP-27's, which may reduce the required weight on the moon by more than 500 pounds. The weight of the alternate RTG configurations are given in Table 4-33.

Table 4-33. Alternate RTG LM EPS Weight Estimates

Components	Number	Weight (Pounds)	Number	Weight (Pounds)
RTG	1	65	2	130
Descent batteries	8	1,264	3	524
Power control unit	1	30	1	30
Total	10	1,359	9	684

The SNAP-27 Radioisotope Thermoelectric Generator (RTG) (Figure 4-43) was developed for the Apollo lunar-surface experiment package (ALSEP). Each generator output over the 90-day mission will be 70 watts, with a growth potential to over 100 watts. Actual tests have demonstrated stable operation in a simulated lunar environment for periods greater than one year, and the predicted reliability for the 90-day mission is in excess of 0.9999 (see Appendix N). The heat-rejection temperature of 490 F permits simple integration with thermal-energy distribution systems within the LM. The system is light and compact and has been qualified for the Apollo mission environments.

Regarding the operational concept, two approaches can be used to adapt the current SNAP-27 system to the ELOR mission. The fuel capsule could be transported to the lunar surface in a separate container in the manner planned for the ALSEP mission, or the generator could be fueled before launch. In this configuration, reentry protection must be located directly on the radioisotope fuel capsule to assure fuel containment in the event of a power

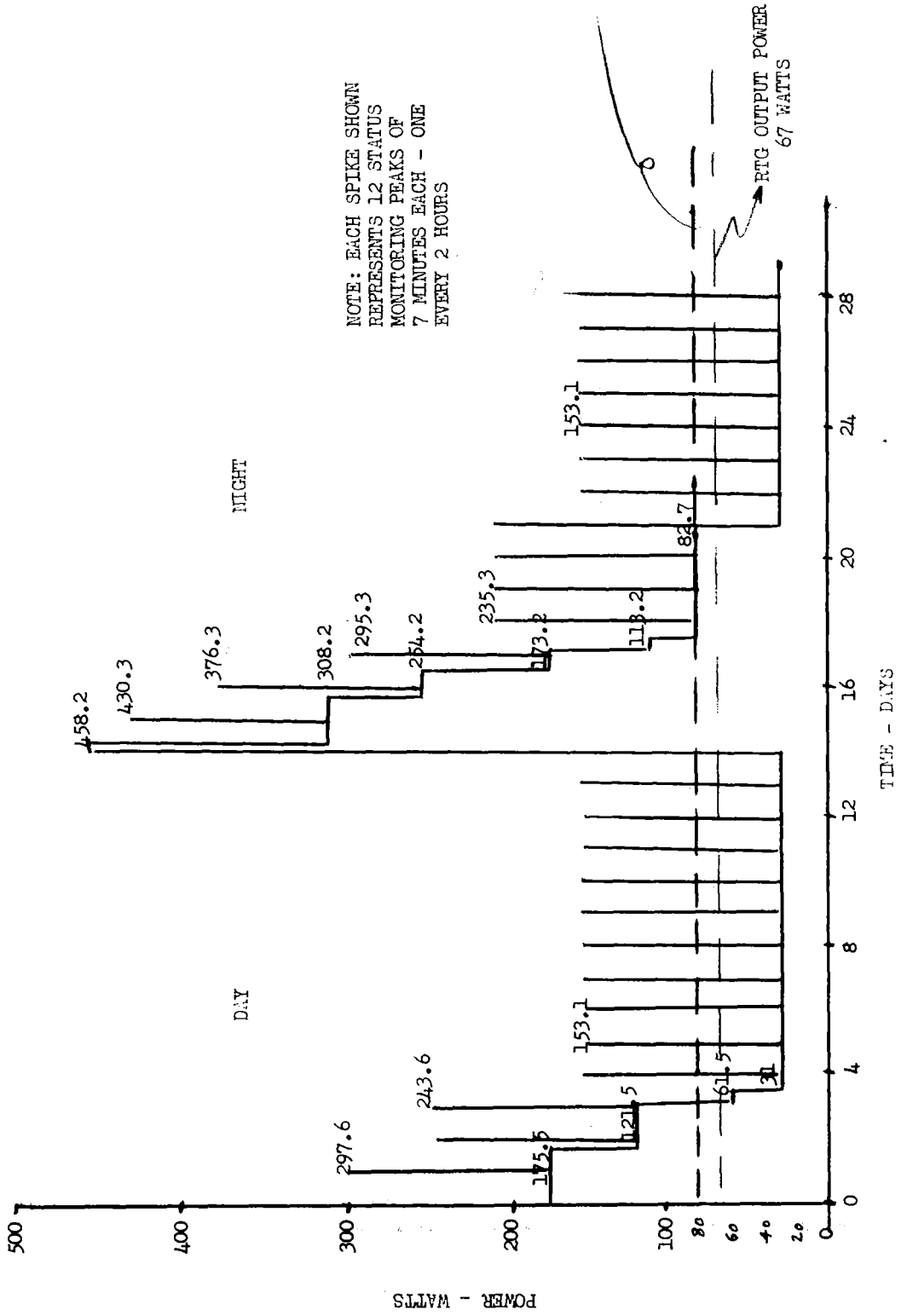

Figure 4-41. Three-Man, Ninety-Day LM Quiescent-Storage Power Profile for One Lunation (28 Days), RTG/Battery Configuration

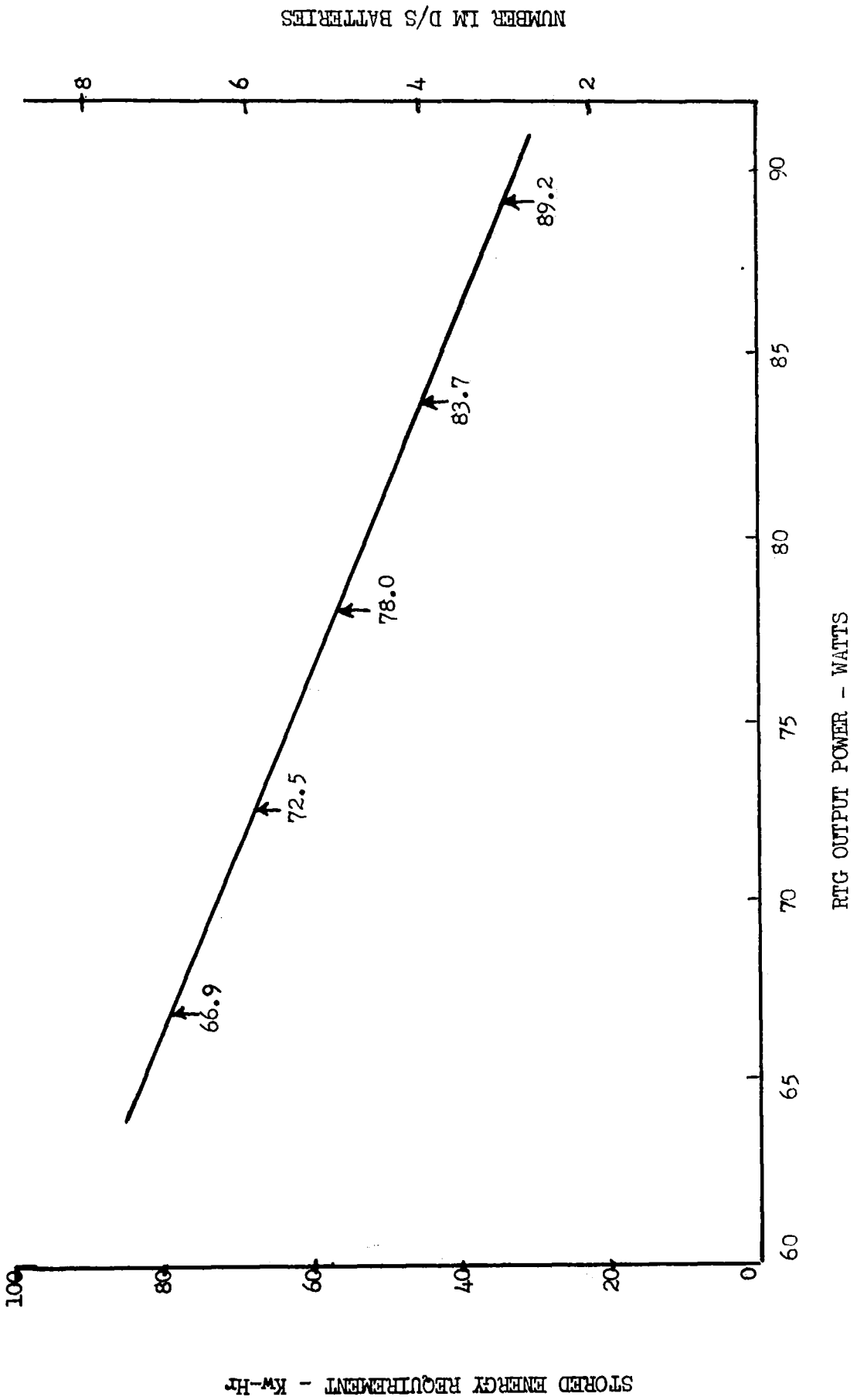

Figure 4-42. Three-Man, Ninety-Day LM Stored Energy Requirement Versus RTG Output Power

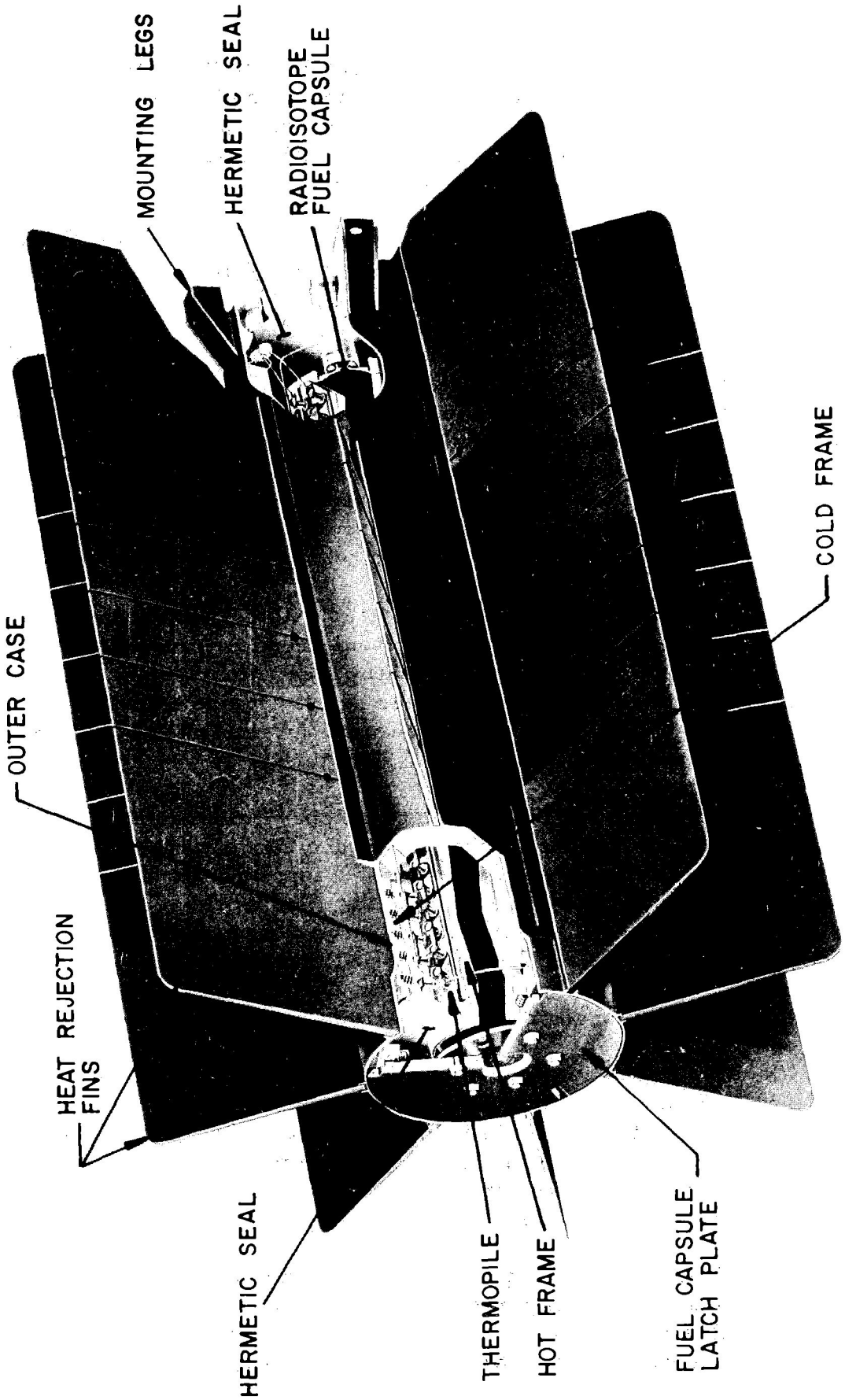

Figure 4-43. SNAP-27 Power Supply

system reentry. The flexibility of the SNAP-27 RTG system permits use of several integral fuel capsule/reentry system combinations. Adequate space is available within the dimensions of the present, proven thermopile; therefore, no thermopile design changes and requalification are required to adapt the SNAP-27 RTG system for this approach.

The fueled launch approach eliminates the astronaut operations associated with generator fueling and effects a weight savings associated with the ground launch graphite fuel cask and its support structure (approximately 15 to 20 pounds). Offsetting these advantages is the more difficult thermal control problem with respect to both the generator and the LM during the transit phase. In particular, during the ascent and earth-orbital portions of the mission, when the LM is inclosed by the SLA, the high effective sink temperatures will require special precautions to prevent overheating of the thermopile and consequent damage to the elements. These precautions could include modification of the fin system to increase the heat-rejection capability and/or shorting the generator to increase the Peltier cooling and, hence, lower the hot-junction temperature.

While this approach could be adopted without significant changes in the generator, the fuel capsule assembly would require redesign and requalification to incorporate and verify the reentry protection system. Thermal balance calculations involving the transit phase would require updating, and the generator qualification program would require repeating to verify the fueled hot-launch capability of the SNAP-27 structure.

The current separate-shipment concept eliminates the need for any changes, since all qualified equipment in the current system is applicable. The ground-launch graphite fuel cask mounting location and arrangement is retained so LM conditions are unchanged. The fact that astronaut operations are required to fuel the generator is not considered detrimental, particularly, in view of the fact that such operations will have been previously performed as part of the ALSEP program. For the ELOR mission, therefore, the current separately launched concept is recommended.

The unfueled generator could be placed in several positions for transport; however, it is believed that minimum perturbation to the current LM design will result from placing it in the scientific equipment bay. (This location has been assumed in the thermal and mechanical integration studies.) If required, generator deployment can be accomplished by the astronaut after arrival on the lunar surface.

As a final operational point, the generator will continue to deliver power long after the 90-day mission, and some consideration might be given for uses of this power; for example, storage power for the shelter to allow later use or power for an ALSEP-type package deployed by the astronauts

prior to departure. These possibilities are enhanced by the removable-fuel-capsule feature. At the completion of the stay-period, the fuel capsule assembly could be removed from the generator, permitting the latter to cool down. The generator could then be readily disconnected from the LM, transported to another location, connected to the new load, and refueled. As mentioned earlier, such a cycle will not affect the performance of the generator.

In its Apollo LM configuration, the SNAP-27 generator is mounted with an unobstructed view of space, except for the base, which is blocked by the lunar surface. This configuration could also be used for the ELOR mission by removing the generator from the scientific equipment bay and placing it some distance away. This approach, however, would preclude the use of waste heat during lunar night, since close proximity between the generator and the LM is required. Thus, thermal integration of the unit must consider the resulting radiator blockage by the spacecraft and the heat receiver. The effect of such blockage will be either to raise the unit operating temperature or to require modification of the radiator to increase its heat rejection capability. Since the former would increase the thermoelectric element degradation rate, the latter represents the desired approach, although a balanced design will probably require both.

Either conduction or radiation may be used to couple the generator to the thermal energy receiver (boiler). Potential configurations are illustrated in Figure 4-44. Advantages and disadvantages of each are presented and analyzed in Appendix X under "Heat Transfer Techniques." Methods for assembly of the generator and mounting it to LM structure are also presented in the referenced appendix and illustrated at the vehicle level in Figure 3-4.

An important aspect associated with integration of an isotope EPS into a manual system is the expected radiation level. The fuel to be used is plutonium 238, and the measured tissue dose rates are expected to be acceptable for both LM and CSM, not exceeding:

Neutrons	70 mrem/hr
Gamma	2 mr/hr (1-day aging time)

These data were taken at one-meter separation without special shielding in addition to the inherent shielding affects of the fuel capsule and the generator.

Solar Cell Array Configuration. The solar array configuration would consist of a solar array plus eight LM descent batteries, again modified to provide 90-day wet-life operation and a limited number of recharge cycles. During the lunar day, the solar array supplies the electrical power requirements of the vehicle and recharges the batteries. During the lunar night, the

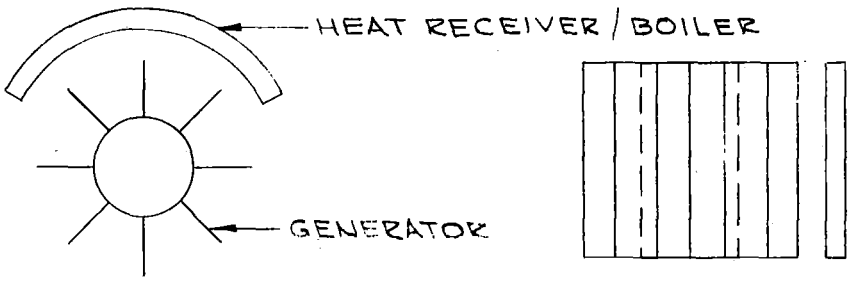

RADIATION COUPLED UNIT BOILER

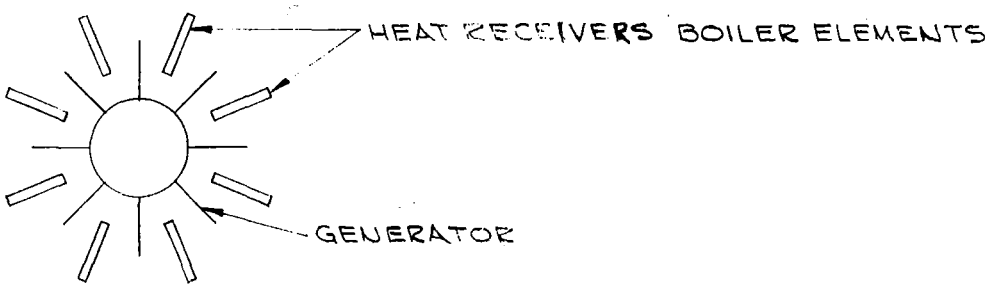

RADIATION COUPLED SEGMENTED BOILER

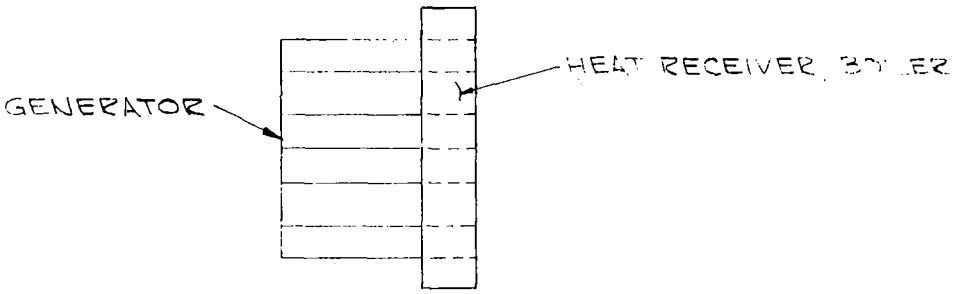

RADIATION COUPLED WRAP AROUND BOILER

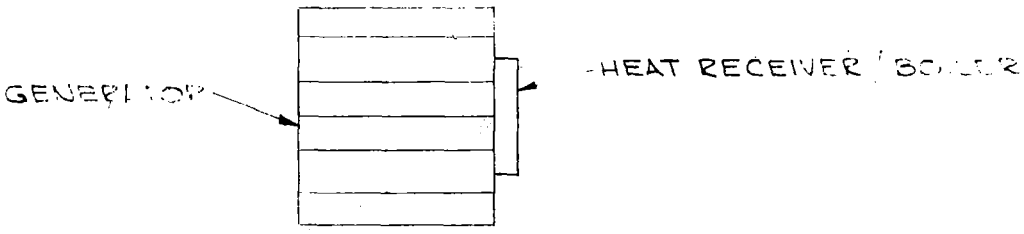

CONDUCTION COUPLED BOILER

Figure 4-44. Generator, Heat-Receiver Configuration

batteries supply the full electrical power requirements and all heat energy. The energy required during the lunar night is 230 watts for 336 hours, or approximately 77 kw-hr. Seven descent batteries are required to provide this energy; another battery should be added for redundancy.

The solar array must be capable of supplying the daylight load of 70 watts average plus recharging the batteries. Assuming a battery charging efficiency of 75 percent, the solar array output must be 377 watts; moreover, the 377 watts must be available immediately at the beginning of, and throughout the entire, lunar day.

A fixed solar array mounted flat on the lunar surface has an output power characteristic which varies essentially as the cosine of the solar angle of incidence. To provide the flat output power characteristic required, the solar array must either be continuously oriented normal to the sun or have a more complex geometrical shape.

The solar-array area required for an oriented array is 70 square feet. The solar array area required for a fixed array depends on the geometrical shape used. Figure 4-45 shows a representative geometrical shape and the relative output power characteristic as a function of the sun angle during the lunar day. The design consists of two flat solar arrays mounted in the shape of an A frame with a 60-degree included angle. The array is deployed so that the two sides of the frame are normal to the east-west path of the sun across the moon. The area required to provide 377 watts is 161 square feet.

The fixed array was selected in preference to the oriented array for reasons of reliability. At 1.33 lb/sq ft, the total weight of the solar array is 214 pounds. The weight of the total solar array configuration is—

1 solar cell array	214 lb
8 descent batteries	1,264
1 power control unit	30
Total	1,508 lb

The Fuel-Cell Concept. The fuel cell concept can be satisfied by either the Pratt & Whitney PC 10 or the Allis-Chalmers orbital fuel cell developed for the Air Force and reported in Reference 4-36.

The fuel-cell configuration would probably consist of three 200-watt fuel cells plus two AAP CGSS (cryogenic gas storage system) tanks for the reactants. In addition, three descent batteries would be required to supply the power during the lunar descent phase. As a result of the boil-off characteristics of the AAP CGSS tanks, it is necessary to store 665 pounds of O_2 and 47 pounds of H_2 at the beginning of the mission to supply the required

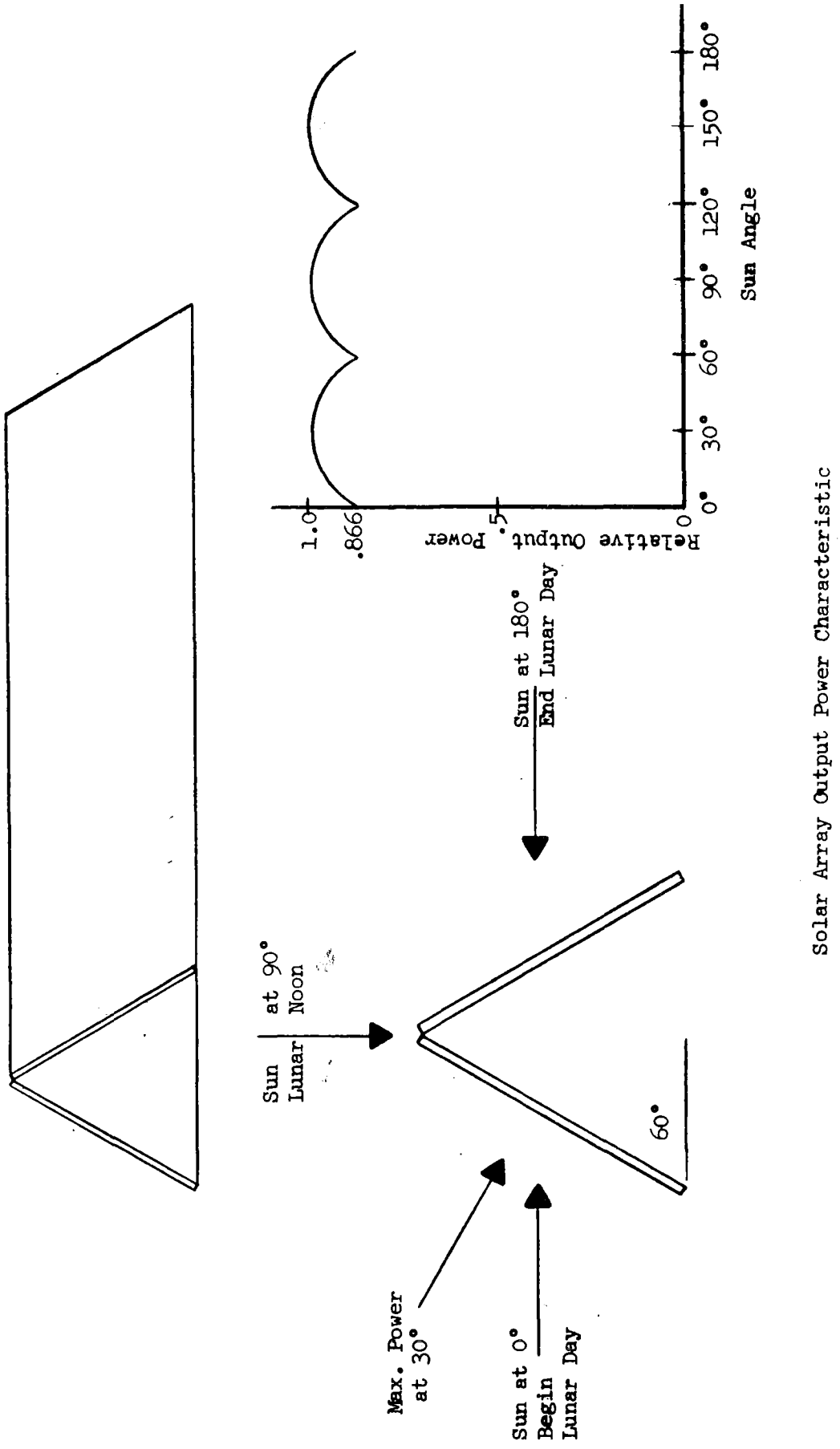

Solar Array Output Power Characteristic

Figure 4-45. Proposed LM Quiescent-State Solar Array

reactants. Some consideration was given to the use of the Block-II CSM cryogenic tanks. It was found that the O_2 tank was barely suitable and that the H_2 tank was completely unsuitable for the mission requirement, since all of the H_2 would boil off after approximately 30 days.

The proposed P&W fuel-cell concept is presented in Appendix O. The proposed Allis-Chalmers concept is presented in Appendix P.

The weight of the fuel-cell configuration as it impacts the LM is directly dependent on the anticipated load profile. Because of the differences in the profiles projected in Reference 1-2 and those estimated by the SD team, a specific weight is impractical at this time. However, those projected in Table 4-34 are considered the upper and lower boundaries of the actual weights.

Table 4-34. Weight Estimates for the Fuel-Cell System

Function	Upper Boundary Weight (Pounds)	Lower Boundary Weight (Pounds)
3 fuel cells	90	140
2 CGSS tanks	560	80
O_2	665	120
H_2	47	60
Coolant loop	56	20
Totals	1,418	420

To these weights must be added that of the batteries required for descent operations, unless the FC's are used in flight. Since three batteries weigh about 474 pounds, the total FC EPS weight is probably between 894 and 1,892 pounds.

Conclusions and Recommendations

An analysis of the potential LM EPS configuration and the associated unknowns as reflected in Table 4-35, leaves little doubt as to the most desirable EPS for the LM quiescent phase power. The RTG is the lightest and has high growth capability with respect to cabin heat requirements, whereas the solar array and fuel cells have no growth margins at all and are very sensitive to errors in estimating load profile. The fuel-cell configuration has a further disadvantage in that the system weight is strongly dependent on both the cabin heat

leak and the cryogenic tank boiloff rates. If either of these factors increases, the system weight must be increased to compensate for the change. Further, the reliability (P_{90} and P_a) of the fuel-cell concept are least desirable of all and perhaps marginal. In any event, failure of this system will not compromise safe return, but will necessitate early abort.

Table 4-35. Alternative LM Quiescent Electrical Power Tradeoff Data

System Concept	Weight Range (Pounds)	Reliability P_{90} and P_a	Error Sensitivity
1. Fuel cells	400 to 1,900	≈ 0.995	Very high
2. RTG*	700 to 1,300	>0.9999	Very low
3. Solar cells	1,000 to 1,500	$\geqslant 0.9999$	High
4. Batteries (all)	about 4,600	$\geqslant 0.9999$	Very high
(*)Recommended concept			

Based on the foregoing data, it is recommended that the RTG concept, in the form of a SNAP-27 modified to provide ascent stage heating, be used for the LM descent stage EPS and that studies be initiated to complete the modifications and integration into the LM. This system will require no maintenance or repair to achieve the projected P_s; however, if it is desired or required, some maintenance can be accomplished, even in its present form.

4.4.2 Descent Propulsion System

System Description

The descent propulsion system consists of a single thrust chamber, two fuel tanks, and two oxidizer tanks with the associated propellant pressurization and feed control components. The engine is a deep-throttling rocket with an ablatively cooled combustion chamber and a radiation-cooled nozzle. It develops a maximum thrust of 10,500 pounds and is throttleable between 0 and 60 percent of full power. Its functional diagram would appear much the same as the CSM propulsion system of Figure 4-25, except that the LM engine is gimbaled to provide ±6° of pitch or roll control during descent.

The following modifications to the Apollo LM configuration are required to compensate for the increased landed weight:

1. Additional propellant tankage is required for the increased propellant quantity.

2. Additional helium pressurant must be provided for the added propellant.

3. The burn-time at maximum thrust and the thrust level during the throttleable phases must be increased for the descent engine.

4. Structural beef-up of the descent stage and landing gear are required.

In order to establish descent propulsion design requirements, the LM has been assumed to have a separation weight of approximately 40,000 pounds and a propellant storage capacity of 21,500 pounds.

Systems Analysis

The descent propulsion is not used after touchdown; consequently, the basic concern is associated with the need to provide additional propellant and engine burn-time.

Descent Propellant Tank Modifications. Two methods considered for providing the increased descent propellant quantity for the Augmented LM taxi mission are—

1. Retain the four existing LM descent propellant tanks without modifications, and add two new cylindrical tanks mounted in two descent-stage corner quadrants.

2. Modify the existing descent tanks by changing the hemispherical end-domes to ellipsoidal ends and increasing the length and the diameter of the cylindrical section.

The six-tank configuration requires modifications to the feed system to balance the propellant flow throughout the system, provide the engine with the correct mixture ratio, and minimize propellant residuals. A simple orifice may not adequately balance the system, in which case an active propellant utilization/propellant management system may be required. Other considerations are that the two additional tanks require installation in the vehicle at distances from the c.g. proportional to their weight in order to minimize mass unbalance, and that the new propellant tanks will subtract from the usable payload volume. For these reasons, the modified four-tank configuration has been recommended for the augmented vehicle.

Grumman studies of tank designs for the four-tank configuration indicate that the lightest tank design capable of satisfying the requirements of the augmented mission is a 52.0-inch-diameter, toroidal-head titanium tank. This tank, although the lightest, is more complicated than other tanks considered, because it requires a cylindrical tension strut located at the center of the tank (see Figure 4-46). To maintain the required accessibility through the bottom of the tank, the tension strut must be capable of being easily removed. This capability can be accomplished by incorporating the strut with a threaded sleeve at the top as part of the cover plate.

An ellipsoidal-head titanium tank is competitive with the toroidal-head titanium tank up to the point where the major/minor diameter (a/b) ratio of the head is 1.414. Beyond this point, further increase in volume requires an elliptical head whose geometry introduces compressive hoop loads, and the tank weight increases rapidly.

A study was conducted to determine if a 52-inch-diameter ellipsoidal head titanium tank (a/b = 1.414) could be designed to yield a payload weight equal to the toroidal-head tank. To accomplish this design, the present LM tank length of 70.270 inches (effective length) must be increased to 73.3 inches. By incorporating a machined feed-line elbow at the bottom of the propellant tank and maintaining the existing elbow center line elevation, the tank can be lowered 1.184 inches (see Figure 4-47). The remaining 1.846 inches required to provide a tank length of 73.3 inches is obtained by extending the tank above the upper shear deck, which requires introduction of a 22-inch-diameter hole in the upper shear deck. The existing slope of the helium pressurization line is maintained by relocating the helium pressurization inlet port below the top center of the tank (see Figure 4-48).

Descent Engine. To determine the ability of the LM descent engine to meet the requirements of a propulsion augmented mission, a preliminary composite thrust profile was developed. This profile was established to define the maximum firing time at the fixed thrust point in conjunction with the maximum total firing time. To define a worst-case descent engine requirement, the thrust profile included an abort condition, which occurs at a point late in the nonthrotteable portion of the braking phase. This profile requires an increase in the duration of the maximum-thrust phase during braking by approximately 100 seconds over the LM profile and provides higher thrust levels during final approach and landing.

Calculated data based on this new thrust profile indicate that the engine case temperature will increase in the combustion chamber and nozzle area over that resulting from a nominal LM profile. The resulting increased temperatures are still below the specified temperature limits. To maintain the same margins as the present LM, some ablative material must be added. Preliminary analysis of the throat indicates that no additional ablative material is required in this area.

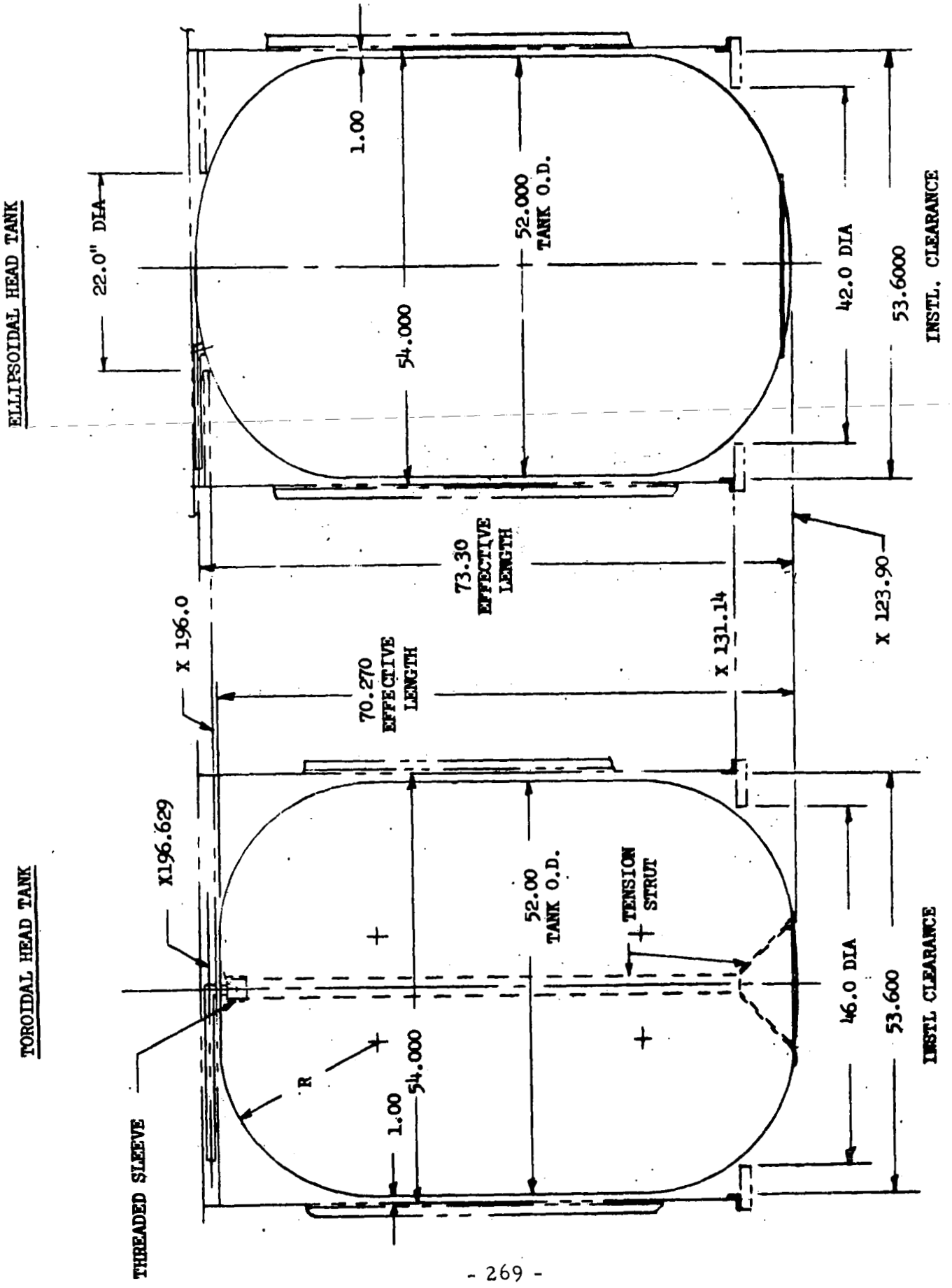

Figure 4-46. Candidate Descent Propulsion Tank Designs

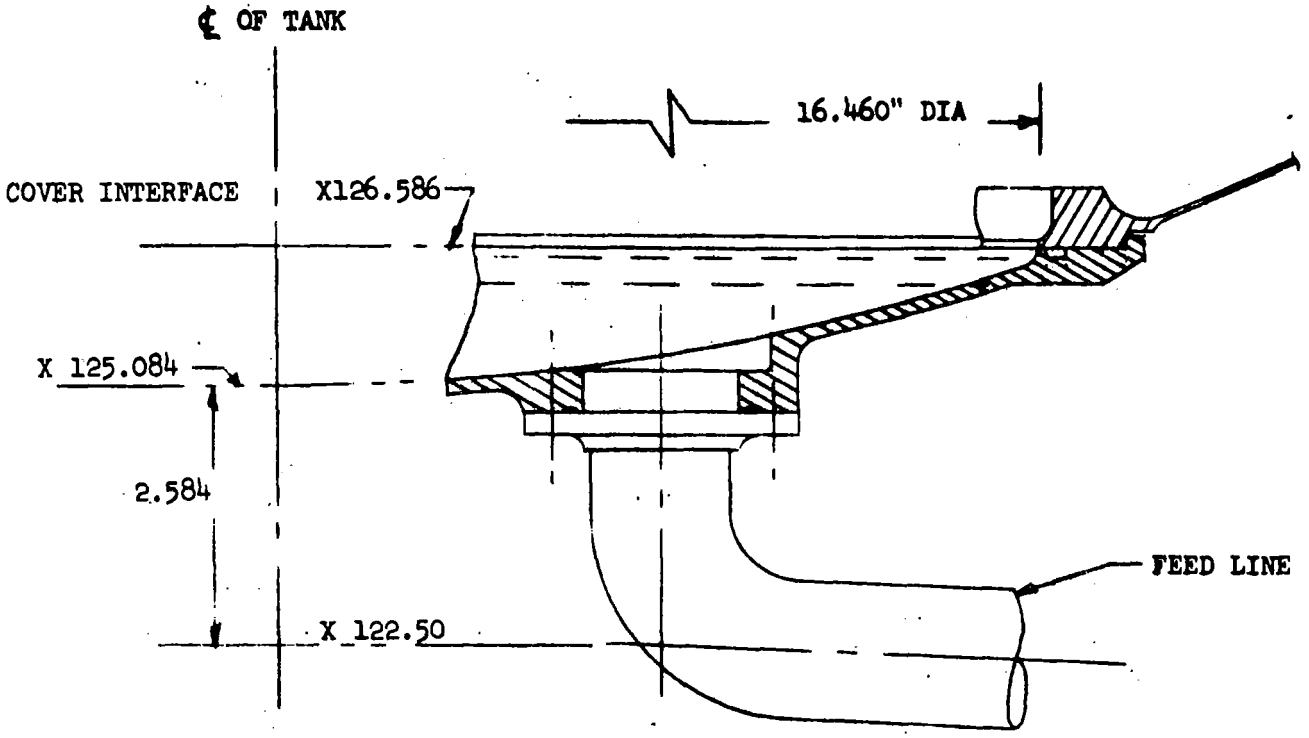

EXISTING LM

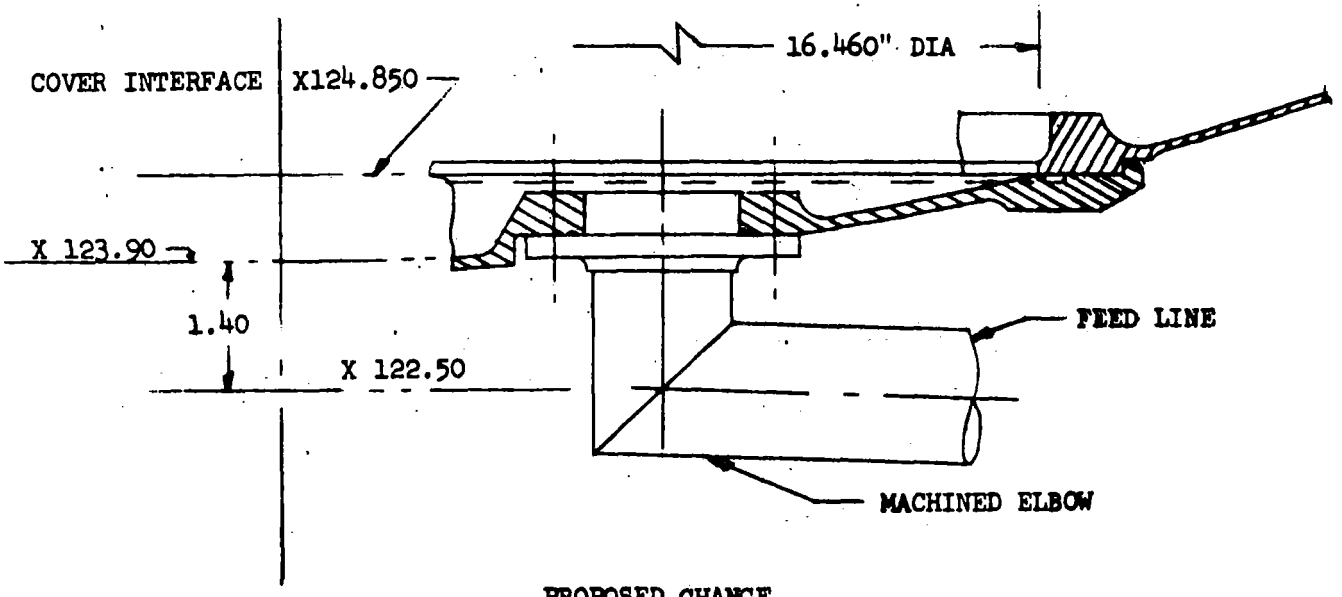

PROPOSED CHANGE

Figure 4-47. Tank Feed Line Modification

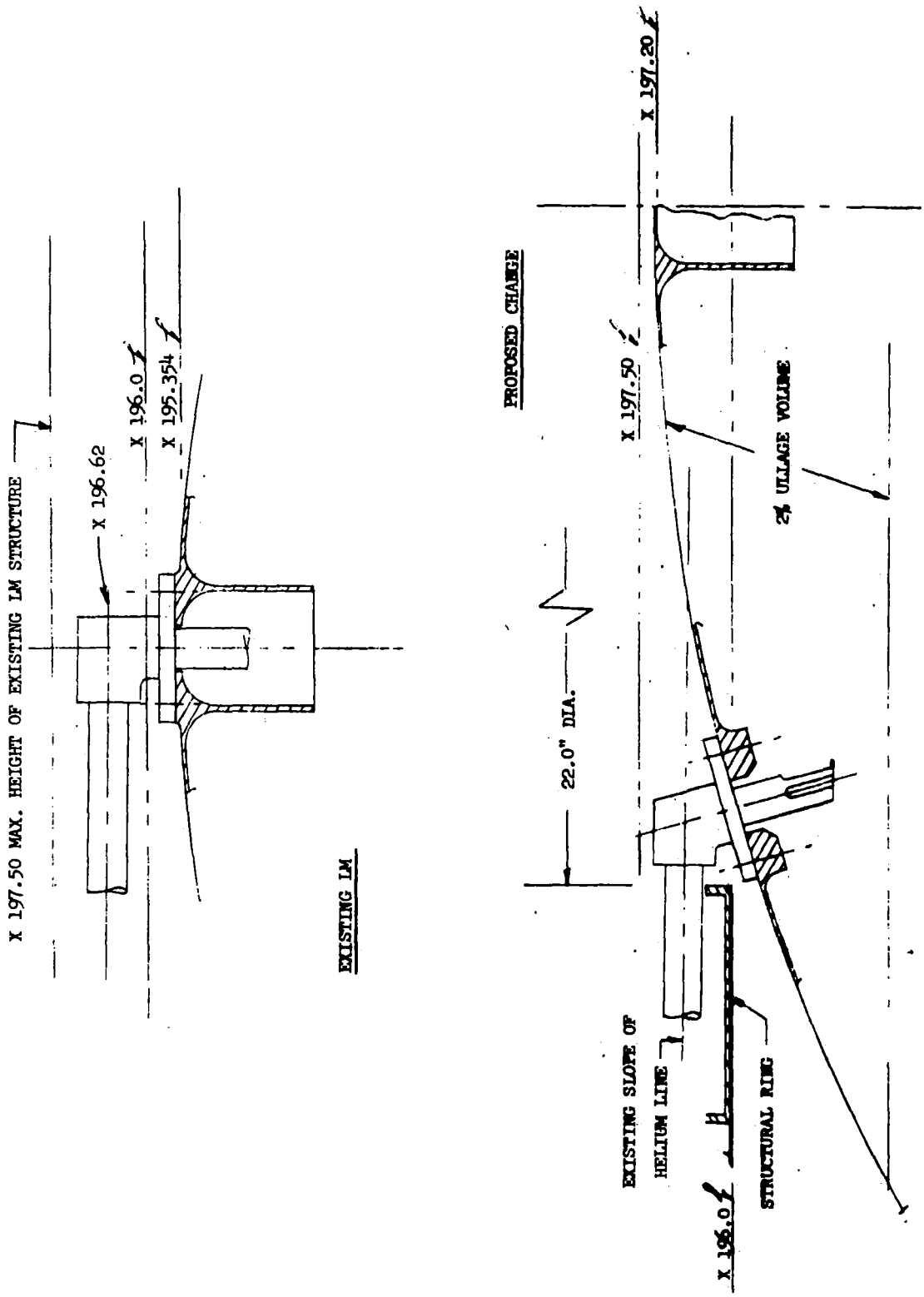

Figure 4-48. Tank Helium Line Modification

An additional consideration in determining the ability of the LM descent engine to perform an augmented mission is the static stability of the vehicle while the engine is firing. The parameter of interest is the gimbal angle required to cause the thrust vector to pass through the center of gravity of the spacecraft. The maximum gimbal angle available for control after accounting for bearing alignment, thrust vector alignment, and rigging error is 5.33 degrees. Of this error, a static offset angle of 1.73 degrees is required to null the effects of center-of-gravity offset. Further analysis must be performed to determine if the remaining 3.6 degrees of gimbal angle will adequately satisfy requirements for correcting descent-engine-mount deflection, aiding in maneuvers, and in general, satisfying the dynamic requirements of the vehicle when the engine is firing.

Descent Propellant Tank Pressurization. The following ground rules were used for determining helium requirements:

1. An ambient start bottle is not used.

2. 27,500 pounds of propellant must be expelled, which is approximately 700 pounds above the minimum guaranteed usable quantity.

3. Blowdown of the propellant tanks is not considered.

4. A maximum anticipated standby time of 131 hours is used to establish initial He loading.

5. He tank heat leak is 7.5 Btu/hour.

Based on these ground rules, 55.6 pounds of He is sufficient to expel the 21,500 pounds of propellant. The maximum nominal He tank pressure that corresponds to this initial loading is 1,614 psia and occurs at engine firing. With a He tank having an allowable operating pressure of 1,710 psia, an appreciable margin exists for design uncertainties, such as loading tolerances and heat-leak variations. A detailed study was conducted to determine the effects of system tolerances. The He tank could be loaded to a density sufficient to expel the total propellant load required for the augmented mission with all tolerances considered; however, the standby time must be reduced to 101 hours, which is considered acceptable.

After landing, pressure in the descent tanks will slowly rise because of heating of the cold He pressurant. It is estimated that the tank pressure will increase to the level of the relief valve pressure setting within 24 hours. To prevent actuation of the relief valve, and uncontrolled tank venting, the LM has solenoid valves in series with squib valves to manually vent the tanks. By venting to approximately 40 psi internal pressure, the danger of catastrophic failure due to micrometeoroid penetration is eliminated. Based on

the tank geometry and material, 40 psi is a conservative estimate of the pressure level at which no crack propagation will occur if the tank is punctured.

The reliability of the descent propulsion system and, therefore, its contribution to P_s will remain unchanged from that estimated for Apollo $P_s = 0.998$ (Reference 4-37). Since it will not function after touchdown, maintenance will not be required.

Conclusions and Recommendations

The descent propulsion system will require some modifications in terms of propellant storage. Beyond those, it will meet the functional requirements of the mission. Work is required in the area of tank redesign and placement. These are not considered one of the spacing problems.

4.4.3 Descent Stage Structure

The modifications required to the DSS are created by—

1. The increased weight of the overall LM.

2. The additional fuel tankage.

3. The addition of the electrical power source.

To structurally accommodate the new propellant tanks, a 22-inch-diameter hole is provided in the upper shear deck of the descent stage. This provision will necessitate redesign of this area. The vertical shear webs will also require strengthening because of the heavier loads imposed.

The higher loads imposed because of the increased vehicle weight will require beef-up of the cross-sectional areas of the machined parts, such as apex fittings, truss supports, corner posts, capstrips and top/bottom center frames.

The descent stage should be nearly unaffected by the meteoroid hazard since it is protected by the ascent stage.

Studies have indicated that the present LM landing gear configuration with a moderate amount of redesign can be used for an augmented vehicle. In general, these modifications include the following: (1) increased density of crushable core, (2) increased thicknesses of struts and members, and (3) strengthening of selected joints. In defining these modifications, the

present LM temperature profile at landing was applied. There are indications based on Surveyor VI data that there may be a reduction in the maximum structural temperatures of the landing gear for the Apollo mission. This reduction could minimize the number of changes required.

These modifications, after qualification, are not expected to measurably affect the reliability of any structural member or its contribution to P_s.

4.4 THE LUNAR MODULE DESCENT STAGE SYSTEMS

LIST OF ABBREVIATIONS

LM-QEP	Quiescent Electrical Power
ALSEP	Apollo Lunar Surface Experiment Package
SLA	Spacecraft Lunar Module Adapter
AAP-CGSS	Apollo Applications Program Cryogenic Gas Storage Subsystem
DPS	Descent Propulsion System
PU/PM	Propellant Utilization/Propellant Management
FTP	Fixed Thrust Point
DSS	Descent Stage Structure

5.0 CONCLUSIONS AND RECOMMENDATIONS

5.1 ELOR MISSION CAPABILITY

5.1.1 Estimating Reliability - The Baysian Approach

Estimating reliability in the classical sense has depended on the conventional statistician who requires much test data on the specific system. This is an expensive and impractical means of assessing modern space system reliability status.

Recently there has emerged a new and more practical approach to reliability estimation based on the logical application of all available applicable data; it is called Baysian statistics. Briefly, it accepts all available test data, including those accumulated on prior systems, and takes into account the effects of modifications. As a result, failure modes that have been eliminated by design actions are no longer included in the system reliability estimate. The end result is a more realistic estimate of mission systems reliability and subsequent safety. (See the Minutes of Session 7A of the 1968 Annual Symposium on Reliability.)

This approach is used by SD in estimating space system reliability and safety because of its conformance to practical engineering principles and economic constraints. The implications on the ELOR Mission are self evident; the data derived from the Apollo program serves as an a priori index as to the potential success of the ELOR, provided the aforementioned conditions are met.

5.1.2 Evaluating ELOR Mission Effectiveness

Effectiveness has been used as a measure of accomplishment; but it must be related to some tangible objectives or another system. A mission achieves maximum effectiveness when it permits accomplishment of the objective and all subobjectives within the allotted time. The ELOR spacecraft (CSM/LM personnel delivery system) must therefore permit the full 90-day stay on the lunar surface and return the three-man party safely to the appointed spot on the earth's surface to achieve maximum effectiveness.

Applying this definition to the ELOR mission, the measure of effectiveness has two factors:

1. Stay time, expressed as: the probability of completing the 90 days without a CSM or LM failure requiring abort (P_{90}).

2. Crew safety, expressed as the probability of crew safe return (P_s).

From these the probability of having to abort or leaving before the end of the 90 days (P_a) is:

$$P_a = 1 - P_{90}$$

P_s is not dependent on stay time because abort can be initiated at any time deemed necessary to assure crew safe return, constrained only by rendezvous/departure windows. It is dependent on time in the sense that the longer the stay time, the greater the possibility of a crew-sensitive failure.

5.1.3 Command and Service Module Effectiveness

The CM systems were evaluated in Section 4.1 of this report, the results are summarized in Table 5-1. The SM was evaluated in Section 4.2 and summarized in Table 5-2. The cumulative results of these recommendations and the resulting mission potential is expressed as a function of time in Part A of Figure 5-1.

The recommended design improvements raises the Block II CSM P_{90} to about 0.65. The addition of some switchable and automatic redundancy along with a minimum provision for maintenance would raise the CSM ELOR contribution to P_{90} to greater than 0.99 for the 90-day mission. The one remaining weakness in the CSM is the stability control function for the quiescent state. It was found that even this area could be improved over the 0.993, but better data are required to make a final judgment. In any event, a failure will only affect the requirement to abort.

The resulting probability of having to abort (P_a) before the 90 days because of a command or service module failure is expected to be less than 0.01, or no greater than one chance in 100 of having to abort an ELOR mission due to a CSM failure with the recommended configuration and support.

Table 5-1. Command Module Requirements for Crew Safe Return Assurance

Subsystem	Improved CM Reliability	Improvement Technique	Spares	ELOR Status*	Qualification Status
Electrical power	0.994	Add SNAP-27A a dual system; add redundant inverter.	1***	>0.9999	Completed
Environment control	<0.9	Modify ECS coolant loop; add quiescent loop.	1	0.9995	95 percent
Guidance and navigation	0.98	Provide spares and/or cannibalize LM prior to departure.	4	0.999	Completed
Stability control	0.91	Shutdown SCS; use sun sensor/ ESS and switchable redundancy	7***	0.993	80 percent
Communications and data	0.86	Use switchable redundancy and duty cycle control.	2**	0.998	Completed
Reaction control	>0.999	None.	0	0.9999	95 percent
Up-data link	0.97	Add remote-switched redundant unit.	1**	0.998	Completed
Central timing	0.997	Shut down during dormant mode.	0	0.9998	Completed
Earth landing	>0.9999	None.	0	0.9999	Completed

(*)Contribution to P_s or P_{90} or both (See Figure 5-2).
(**)May be used as spares or switchable redundancy.
(***)Redundant elements.

Table 5-2. Service Module Recommendations for Crew Safe Return Assurance

Subsystem	Improved SM Reliability	Improvement Technique	Spare	ELOR P_s	Qualification Status
Electrical power plant	0.994	Shut down during dormant phase [use SNAP-27A]	0	0.9999	80 percent
SM reaction control	0.996	Aluminize positive expulsion tanks. Block II redundant quads O.K.	0	0.99999	Completed
SM propulsion	0.996	No change or R&M required.	0	0.996	Completed
Propellant storage	0.9999	No R&M required.	0	0.99999	Completed*
Propellant control	0.9999	No R&M required.	0	0.9999	Completed*
Deep space antenna	0.9991	No R&M required.	0	NA	Completed
Cryogenic storage	0.9999	No R&M required.	0	0.9999	Completed*
SM structure	0.2	Patching kit desirable.	Kit	0.995	80 percent

(*) These items are qualified for the SD concept, but not for the LMSC recommendation.

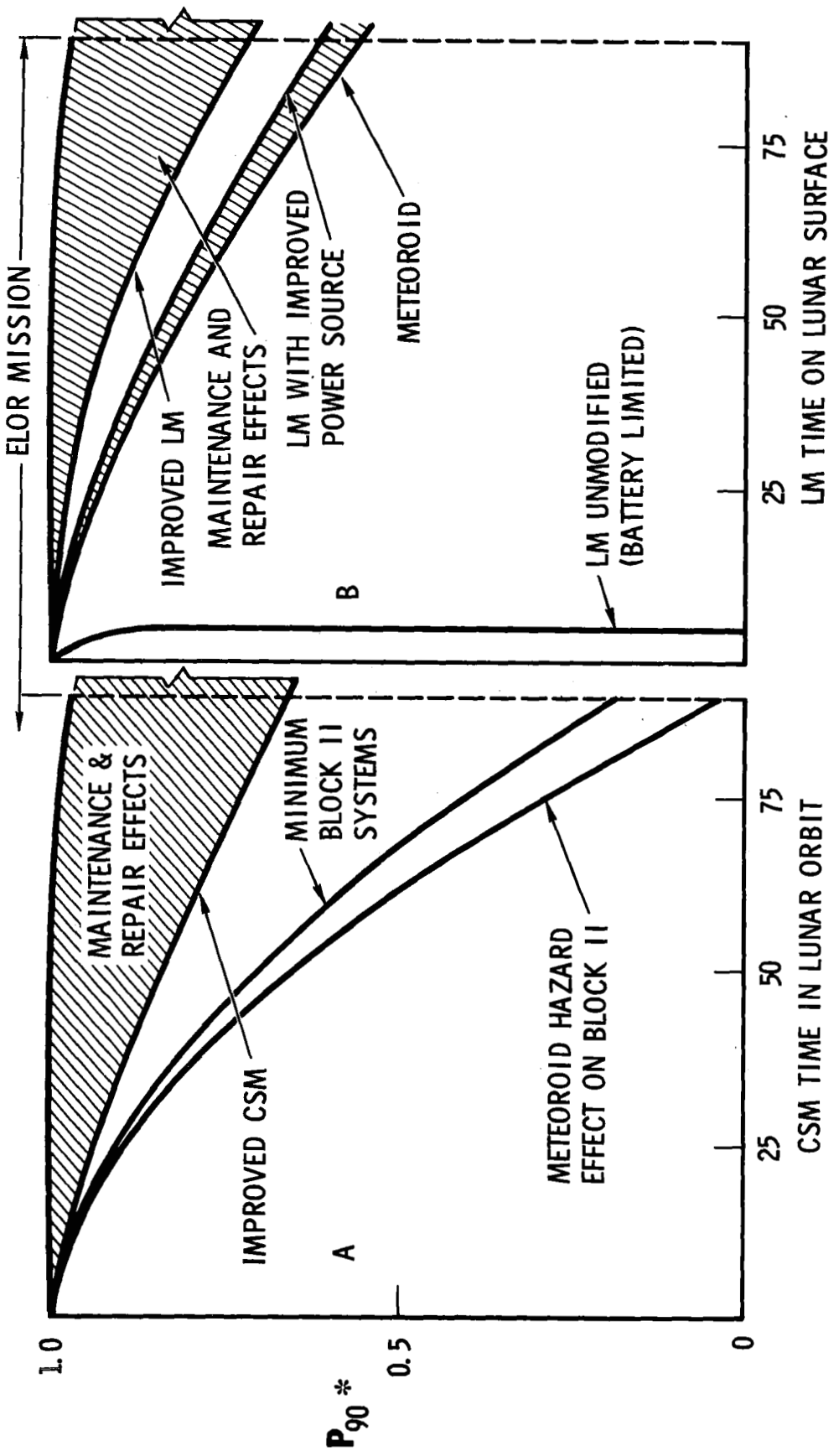

Figure 5-1. ELOR Mission Safe Return as Affected by Design Concept and Stay-Time

*See definitions on page 48.

5.1.4 Lunar Module Effectiveness

The LM ascent and descent systems were evaluated in Sections 4.3 and 4.4, respectively, and are summarized in Tables 5-3 and 5-4, respectively. The cumulative results of these recommendations are presented in Figure 5-1, Part B, where the various potential LM concepts are related to stay-time and P_{90}. The unmodified Apollo LM is very limited because of the battery life and is, therefore, not a serious contender. Using the SNAP-27 provided an EPS P_{90} of nearly 1.0. Beyond that, as indicated in Table 5-3, the one remaining weakness is in the environmental control and, more specifically, the heat transport loop, the only operating function during the dormant mode. In that system, provisions for module replacement will resolve any other potential weaknesses.

The LM as recommended herein will meet the 90-day ELOR requirement with a P_{90} probability greater than 0.99. The probability of having to abort because of a LM system failure is expected to be less than for the CSM because of the less complex quiescent mode control; it should not exceed $P_a = 0.003$. That implies that there are only three chances in one thousand of having to abort because of a LM system failure. This is because only a part of the communications system, the environmental control and electrical power systems must operate. Its contribution to P_s may be somewhat lower than the DRM because of increased system complexity for the third man; however, planned maintenance can offset this.

5.1.5 Assessing Crew Safe Return

Since with the ELOR mission, as with the Apollo mission, abort can be initiated at nearly any time, being constrained only by the LM rendezvous window and the transearth departure window. The probability of safe return (P_s) should approach or exceed the value extablished for Apollo; i.e., 0.999. It approaches that value based on the premise the systems supporting the manned phases, for the most part, operate about 25 percent less, and no deleterious effects are expected from the quiescent phase. It may exceed the actual value because of planned maintenance for potential system weaknesses.

The situation can best be understood through analysis of the data as presented in Figure 5-2. Note that the LM has only four functions which contribute to the probability of completing the 90 days without an uncompensated failure, two of which contribute some degradation to P_s. The remaining LM functions are not operated until departure.

The CSM has one more function and some additional complexity in the others; all of which add up to a slightly higher chance of abort ($P_a = 0.01$). Again, two of the five functions contribute some degradation to P_s.

Table 5-3. LM Ascent Stage Requirements for Crew Safe Return Assurance

Subsystem	Improved LM-A Reliability	Improvement Technique	Spares	ELOR P_s	Qualification Status
Electrical power	0.96	No M&R required (perhaps manually activated batteries).	0	>0.99999	90 percent
Environmental control	0.8	Operate P/O heat transport loop only during quiescent; provide for replacement of the pump motor.	1	0.999	90 percent
Guidance and navigation	0.99	Provide for recommended M&R.	5	0.999**	Completed*
Stability control	0.993	Could be improved through spare.	-	0.993**	Completed
Reaction control	0.93	No M&R or other required	0	>0.99999	Completed
Communications	0.99	Provide for recommended M&R	2	0.998	70 percent
Ascent propulsion	0.995	No M&R required.	0	0.995	Completed
Structure	>0.999	Patching kit may be desirable.	0	>0.999	95 percent

(*)Except for determination of heater requirement during a dormant phase.

(**)P_s greater than Apollo mission without spares.

[ ]Does not contribute to P_s.

Table 5-4. LM Descent Stage Requirements for Crew Safe Return Assurance

Subsystem	Improved LM-D Reliability	Improvement Technique	Spare	ELOR P_s	Qualification Status
Electrical power*	≈1.0	No R&M required.	0	≈1.0	70 percent
Descent propulsion	0.997	No requirement.	0	>0.997	Qualified
Descent structure	>0.999	No requirement.	0	>0.999	50 percent

(*)SD/Grumman recommended concept, using SNAP-27. Only batteries contribute to P_s.

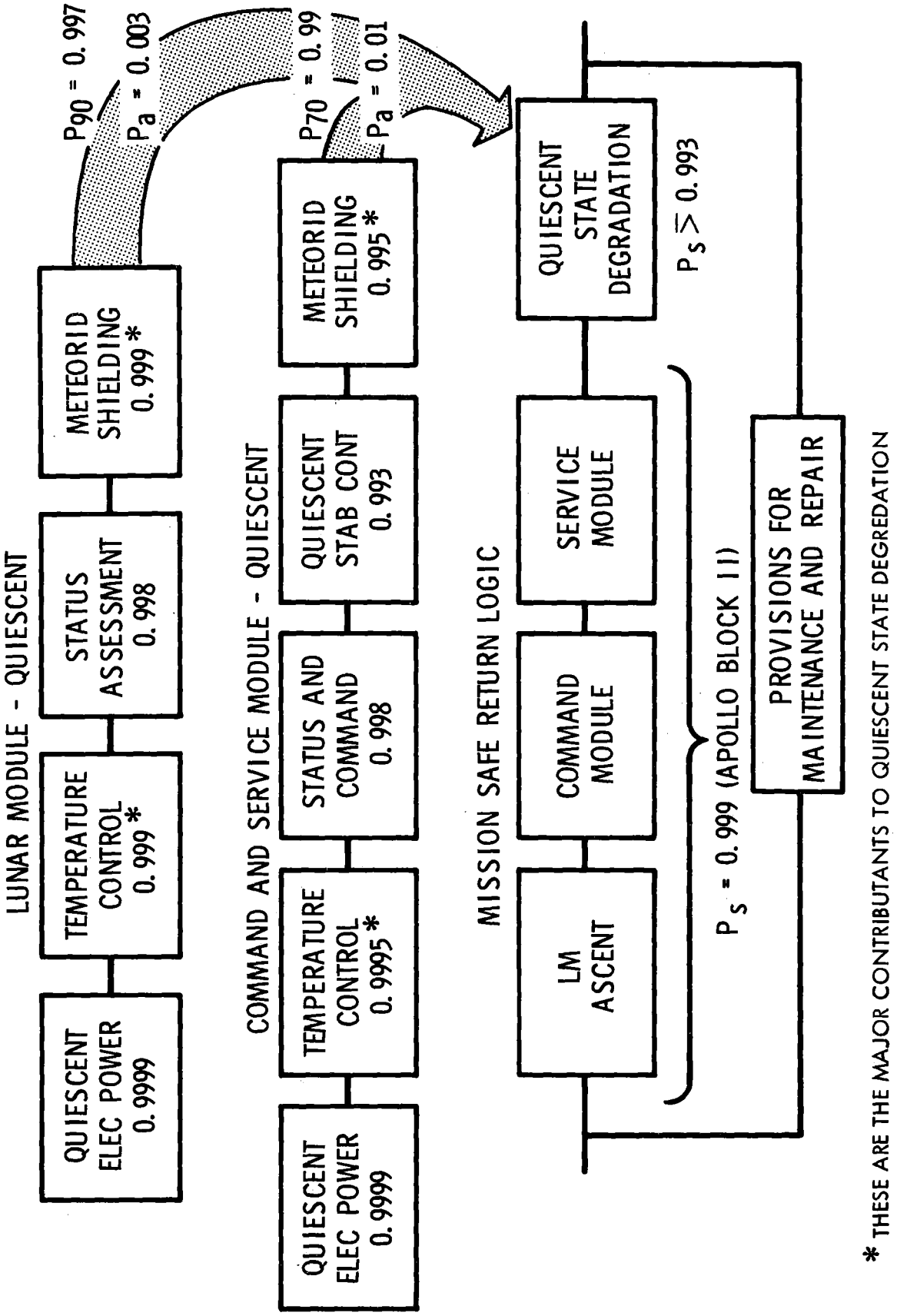

Figure 5-2. Assessing ELOR Mission Safety

Regarding the functions affecting safe return (P_S), as previously indicated, the combinations of the three modules without the effects of the quiescent state use must be $P_S = 0.999$, the Apollo II objective. Therefore, the total P_S is the product of the two, or about $P_S = 0.992$ without provisions for additional maintenance. The repair kit for meteroid damage will raise the P_S back up to, or over, $P_S = 0.999$. Additional maintenance provisioning could possibly realize additional improvements.

The one constraining factor associated with the foregoing is the launch window from the lunar surface. To approach the Apollo DRM safety, it may be necessary to rendezvous with the orbiting CSM within a two-hour time frame; and with the CSM in a lunar polar orbit, this may be impractical for some sites on the surface. However, here again, provisions for planned maintenance will permit much longer delays, the amount depending on the failure mechanism.

In summary, there are reasonably good data to support the estimate that safe return of the ELOR crew can be accomplished with a risk that is the same, or better than that associated with the Apollo DRM.

5.2 MISSION SYSTEM WEIGHT INFERENCES

The ELOR mission system imposes a requirement for an increase in the weight of the spacecraft as it is injected into translunar trajectory. A comparison of the potential alternatives as referenced to the Spacecraft 107 lunar mission spacecraft is given in Table 5-5.

The recommended concept, involving the two SNAP-27's and two full cell concepts for the service module, presents the lightest and the safest alternative. It is expected to weigh only 106,112 pounds, as injected, on the way to the moon. This weight is only about 4,000 pounds over the present Saturn V booster capability and represents a modest uprating.

The all-fuel-cell concept weights 111,400; over 5,000 pounds more than the recommended concept and 9,000 more than the Saturn V capability.

5.3 MAINTENANCE AND REPAIR (M&R) REQUIREMENTS AND RAMIFICATIONS

5.3.1 M&R for the CSM

Since the CSM is in lunar polar orbit unattended, maintenance is not possible during the long quiescent phase. This, however, is the more critical phase as far as P_S is concerned, since it lasts for about 2,200 hours. It is

Table 5-5. ELOR Concepts Weight Comparison

(Module Weights are Without SPS Propellants)

	Baseline SC 107* (Pounds)	3 Fuel Cells** (Pounds)		FC's & SNAP 27's** (Pounds)	
		Change	New Weight	Change	New Weight
CM	12,517	+235	12,752	+335	12,852
SM	11,238	+4,089	15,327	-14	11,224
LM	32,596	+6,417	39,013	+6,417	39,013
SLA	3,788	- 0 -	3,788	- 0 -	3,788
$W_{sps\ props\ usable}$	40,129	+1,484	41,613	-623	39,506
Total Injected Weights	100,268	+12,225	112,493	+6,115	106,383

*Baseline weights are SD internal estimates, July 1968. Usable SPS propellant weights are full tank capacity (about 40,000 pounds).

**SPS propellant weights are based upon the ΔV Budget provided to LMSC by MSC (LMSC Improved Lunar Cargo and Personnel Delivery System, Vol IV, T-28-68-4, 28 June 1968).

during this period that failures in operating systems can most likely occur. In contrast, most of the CSM functions are not required to operate during the quiescent phase; failures which occur in the nonoperating functions can be repaired after crew return and prior to the transearth injection, provided they are planned for. Potential failures in the remaining quiescent-critical functions were compensated for by either providing redundant elements or switchable spares. Further, crew safe return can be assured through use of a backup function that is activated from the earth MSFN or a lunar surface control function. In these cases, the lunar party may have to abort to the orbiting CSM to make a repair and/or return to earth.

In the example used, the ELOR stability system (ESS) establishes and maintains the slow roll and dampens out wobble. If it fails after using the switchable spares (< 7 chances in 1,000), the CSM can be returned to the normal mode (Block II) and abort initiated as soon as possible without a serious detriment to P_S.

The most pronounced weakness was found to be created by the meteoroid hazard. There was a very high probability (0.8) of some form of penetration. It was compensated for through some shielding (a form of redundancy) and planned repair. A patching kit is recommended for repair of the CM heat shield in particular, which will easily compensate for any realistic risk level.

The result of the analysis for the CSM indicated that even though some form of maintenance is not practical for the longest mission phase, the combination of switchable redundancy, abort capability and 6 to 8 spares plus a repair kit amounting to less than 200 pounds, to be used after crew return, will provide a P_S of 0.99. Some of the spares could be eliminated through provisions to cannibalize the LM. (See Tables 4-1 and 4-2). Theoretically, CSM-ELOR could be safer missions than Apollo.

5.3.2 M&R for the LM Vehicle

The LM vehicle is in a quiescent state either in transit to the moon or while on the lunar surface, the combination of which makes up most of the ELOR mission. The time on the lunar surface, some 2,200 hours, presents the greatest failure hazard period. As indicated in Tables 4-3 and 4-4, only 8 spares were required to raise the P_{90} from 0.7 to over 0.99 for the full 90 days. These spares weigh less than 200 pounds. Further, five of these are required for the G&N system, to be used just prior to launch. These same units could be used as spares for the CSM G&N system, eliminating about 140 pounds between the two vehicles, if the logistic problems could be worked out.

The LM, although not specifically designed for maintenance, is available to the lunar party at any time and is, therefore, accessible for some form of maintenance action. For that reason, no LM system emergency should create an abort situation. In most cases it is expected to be a safer alternative to make a repair. The only possible exception is with the SNAP-27, which is an improbable situation. Recommended maintenance involves replacement at the box level, which is presently possible with little to no design changes.

5.4 DEVELOPMENT REQUIREMENTS AND CONSTRAINTS

The ELOR mission does not call for a completely new development program and, in fact, is not a very extensive departure from the Apollo design reference mission (DRM-2A). The overall manned operations have decreased by about 15 percent for the CSM and 33 percent for the LM. The major differences are created by the need to maintain optimum storage conditions. Further, the ramifications of the third man on the LM vehicle has created the most extensive changes and, therefore, the pacing factors for the ELOR development program.

The projected development program for the ELOR vehicles are presented in Figure 5-3. The LM vehicle is expected to take about six months more than the CSM because of the more extensive modifications required to both the ascent and descent stages.

The major problem area in the development cycle is that introduced by the subcritical cryogenic storage systems. If these are considered to be a requirement (not recommended by NR/SD), a two-year subsystem development program is required to prepare them for vehicle integration. The result is that the ELOR development program would be stretched from a conservative 3-1/2-year cycle to nearly 4-1/2.

Some of the major development items to be considered include—

1. Qualification of operating subsystems for the 90 days.

2. Manned rendezvous and docking of the LM to an unmanned CSM.

3. LM ascent and descent propellant tanks.

4. LM and CSM thermal control for the dormant phases.

5. LM and CSM environmental control modification.

6. New and modified subsystem fit and compatibility verification.

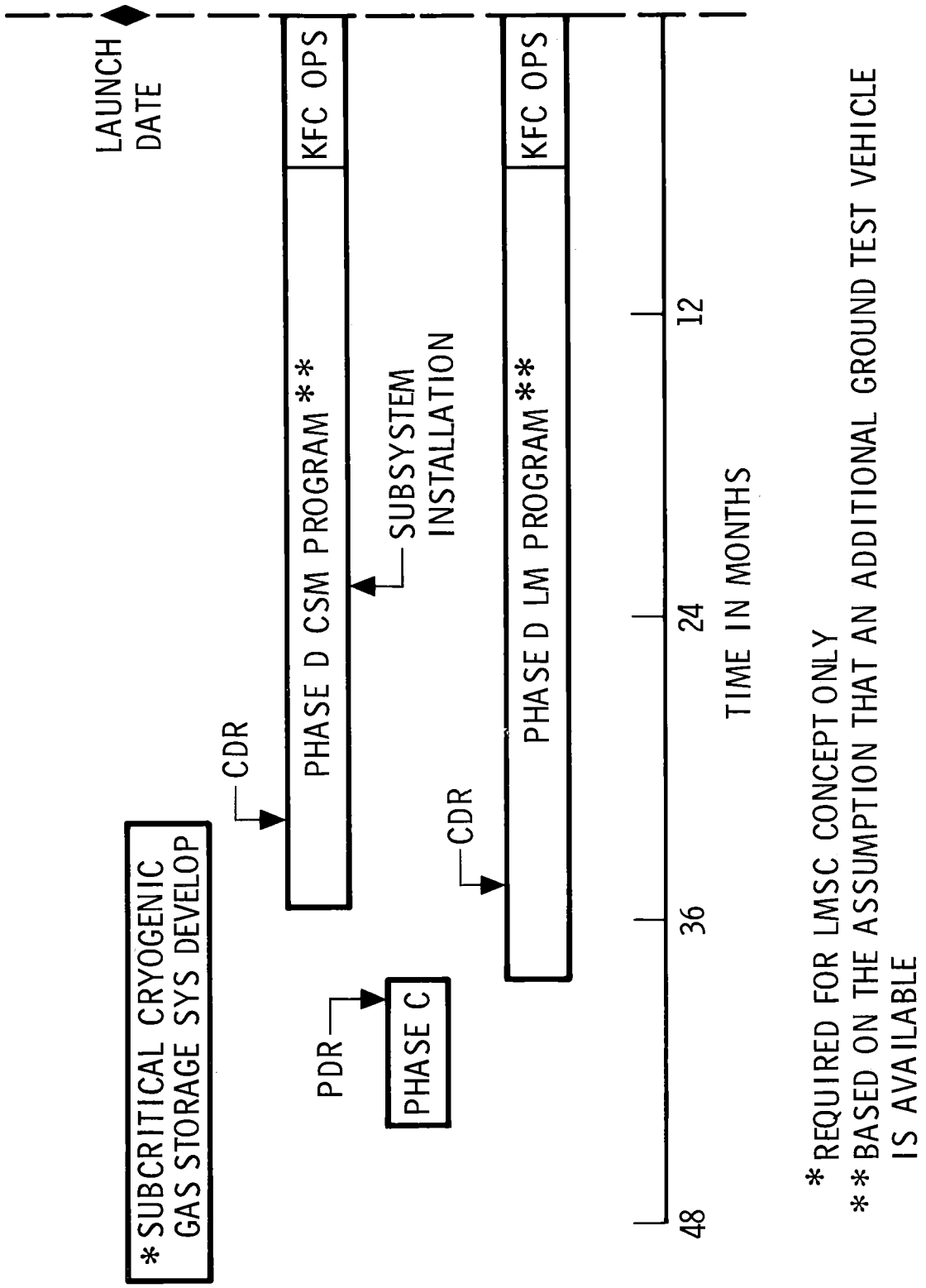

Figure 5-3. ELOR Vehicle Development Program

7. New electrical power source for both LM and CSM.

8. Status monitor for LM and CSM.

9. ELOR stability control for CSM.

10. CSM command demodulator/decoder.

The study identified the development of the Command Link for the manned rendezvous and dock of the LM to an unmanned command module as a long-lead-time item. Early implementation of command link development will allow man-rating to be accomplished as an additional task on one of the latter Apollo flights. This would minimize cost and schedule implications to the proposed estimated program plan.

5.5 CONCLUSIONS

The study of the application of the data derived from a study of mission duration extension problems to the ELOR mission has shown that contemporary space systems can be used to meet the needs of some of the more conservative extended missions. The extended lunar-orbital rendezvous mission is brought well within the realm of possibility through natural extensions of contemporary subsystems capability by application of recognized systems engineering processes such as operational control; fail-safe design; redundant functions; and, most effective of all, planned maintenance and repair.

Perhaps the most profound result of the study was associated with the fact that provisions for as few as 15 repair or replacement actions could raise the probability of completing the 90 days on the lunar surface without an abort to over 0.99 from about 0.5. These maintenance actions have been specifically identified and are known to be feasible with little to no modifications to Block II configurations (see Tables 5-1 through 5-4). Further, the probability of safe return is expected to exceed that for Apollo II.

The ability to specifically identify required maintenance action before the mission and during the development phases is paramount to this mission concept. To this end, previous studies have contributed greatly, specifically, the baseline study, Reference 1-1. Further, Reference 5-1 is a summary of the results as they concern specific identification and location of potential maintenance actions; it develops the logic associated with the process and demonstrates its applications.

The development requirements associated with the ELOR mission, as recommended by the Grumman/SD team involves a very modest program

when related to the contemporary program. The development cycle (Phase C and D) should not exceed 3-1/2 years, and the pacing components vary with the selected concept, the LM stages requiring the most extensive modifications.

In conclusion, the mission is as safe as Apollo; it is the most conservative approach to extended lunar exploration; it can be implemented within the 1970-1975 time frame, and it demonstrates the effectiveness of even the crudest form of maintenance planning on extended-mission safety.

REFERENCES

1.1 A Study of Space Mission Duration Extention Problems, Vol. 1-4 (NAS2-4214). Space Division, North American Rockwell Corporation, SD 67-478 (30 October 1967).

1.2 Improved Lunar Cargo and Improved Delivery System, Vol. 1-4 (NAS8-21006). Lockheed Missiles and Space Company, T28-68 (28 June 68).

2.1 Design Reference Mission II A, Apollo Mission Planning Task Force. NASA, MSC, PM 3/M-171/66 (30 October 1966).

2.2 Dormant Operating and Storage Effects on Electronic Equipment Part Reliability. Martin Marietta Corporation for Rome Air Development Center, RADC-TR 67-307 (July 1967).

2.3 Serveyor VI, a Preliminary Report. NASA/Office of Technical Utilization, NASA SP-166 (March 1968).

2.4 Bioastronautics Data Book. NASA Scientific and Technical Information Division, NASA SP-3006 (1964).

2.5 Final Report, Preliminary Definition Phase, Apollo Extention System, Thermal Analysis. Space Division, North American Rockwell Corporation, SID 65-1524 (December 1965).

2.6 Final Report, Preliminary Definition Phase, Apollo Extention System, Structural Loads and Criteria. Space Division, North American Rockwell Corporation, SID 65-1530 (December 1965).

2.7 CSM Meteroid Shielding Analysis Report, October 1965 Baseline Configuration. Space Division, North American Rockwell Corporation, STR 138 (October 1965)

3.1 Apollo Spacecraft and Systems Familiarization. North American Rockwell, APC-118 (15 August 1968).

3.2 Apollo Status, Weights, Spacecraft 107. Space Division, North American Rockwell Corporation (July 1968).

3.3 Apollo Applications Program, Future Missions, Report on Three-Man 90-Day Augmented LM Taxi. Grumman Aircraft Engineering Corporation, ARP325-6 (31 July 1968).

4.1 Letter, C.W. Chandler of Westinghouse Aerospace Defense and Marine Group to R.H. Reynolds of the North American Rockwell Space Division, dated 17 July 1968.

4.2 Probability of Success Review Report for Extended Apollo Man Missions for NAA/S&ID Apollo Battery Charger. ITT Industrial Products Div., ITT-IPD P/N PR1038 (11 July 1968).

4.3 Letter, Neil R. Smith, Eagle Pitcher Co. to R.H. Reynolds of the North American Rockwell Space Division, Dated 16 August 1968.

4.4 Environmental Control System for the Apollo Command and Service Modules for Extended Lunar Orbital Missions. AiResearch Manufacturing Division of Garrett Corporation, 68-4059 (August 2, 1968).

4.5 Environmental Control and Life Support System for Apollo Applications Program. AiResearch Division of Garrett Corporation, SS3414 (10 January 1966).

4.6 Radiator Design Analysis for Apollo Applications Programs. LTV Aerospace Corporation, Design Information Release 353-DIR-01 (February 2, 1967).

4.7 Extended Lunar Orbital Missions Study. AC Electronics Division of GMC (10 July 1968).

4.8 Systems Status Report. MIT Instrumentation Laboratory, E-1142 (Rev 55) (February 1968).

4.9 Stabilization and Control System for the Extended Lunar Orbital Mission (ELOR) Final Report. Honeywell Corporation, 8-PM-001 (July 1968).

4.10 Study Report, Communications and Data Subsystem for an Apollo Extended Lunar Orbital Mission. Collins Radio Company (5 August 1968).

4.11 Reliability Apportionment and Predictions for the Apollo Communications and Data System Block II. Collins Radio Company, CAD192-2 (December 1966).

4.12 Application of the Up Data Link to a Manned Mars Mission. Motorola, Inc., Gov. Elec. Div., MJO-6211-147-1 (11 Sept. 67).

4.13 Central Timing Equipment, Extended Mission Study. General Time Corp. (October 1967).

4.14 Proposal for Extended Lunar Orbital Mission Study, Earth Landing System. Northrup Ventura Division of Northrup Corporation, NVP-6299 (August 1968).

4.15 A Relibility Assessment of the Apollo Earth Landing System. Northrup Ventura Division of Northrup Corporation, Report Number NVP-6249 (1968).

4.16 Fuel Cells for Extended Lunar Orbital Mission. Pratt and Whitney Aircraft, PWA-3474 (24 July 1968).

4.17 Fuel Cell Power Plant for Extended Lunar Orbital Missions. Allis-Chalmers, 418-1037 (August 15, 1968).

4.18 Application of SNAP-27 to Extended Lunar Orbital Rendezvous Missions. General Electric Company, MSD (August 1968).

4.19 Reaction Control Engines for Long Duration Missions. Marquardt Corporation MJR #109 (31 August 1967).

4.20 Reliability Assessment of Marquardt's Precision Control Bipropellant Rocket Engine. Marquardt Corporation, MJR111 (29 August 1967).

4.21 Failure Probability Analysis, Failure Mode and Effects Analysis and Critical Items List for the R-4D Rocket Engine and Accesory Equipment. Marquardt Corporation, MJR106 (10 August 1967).

4.22 Report of Mission Duration Extention Positive Expulsion Tank Study. Bell Aerosystems Corporation, 8500-927016 (22 August 1967).

4.23 Manned Mars Flyby, Preliminary SPS Engine Systems Study. Aerojet General Corporation, 3865-553 (October 1967).

4.24 Apollo Service Module Engine, Reliability Failure Rate Data, Mathmatical Models and Modes of Failure Analysis. Aerojet General Corporation, 3865-428 (December 1966).

4.25 Letter, Mr. J.C. Schmid of Allison Div of GM to Mr. Roy B. Carpenter of the Space Division of North American Rockwell Corporation, 67-BA-034, dated 12 Sept 1967, Subject: "Apollo Propelant Tankage Application to the Mars Flyby Mission."

4.26 Final Design Report for Apollo Propellant Tankage. Allison Division of GM, EDR-4722 (1966).

4.27 Study to Determine the Feasibility of Updating the PUGS Equipment for a 700-Day Mission. Simmonds Precision Products, Inc., E-726 (September 1967).

4.28 Failure Mode and Effect Analysis for the Propellant Utilization and Gaging System. Simmonds Precision Products, Inc., I-749 (7 October 1966).

4.29 Extended Duration Mission Study of Apollo II CSM Antenna System. Dalmo Victor Company, R-DU-4535 (23 August 1967).

4.30 Repair of Leaks in an Aerospace Environment. For Directorate of Aeromechanics, ASD/AFSC/USAF, by G.E. Co., ASD-TDR-62-1015 (February 1963).

4.31 Lunar Module Familiarization Manual, Grumman Aircraft Engineering Co., LMA 790-1.

4.32 Lunar Module Environmental Control System Operation for the Extended Lunar Orbital Rendezvous Mission. Hamilton Standard Division of UAC (26 July 1968).

4.33 The Rendezvous Radar. RCA, Defense Electronics Products, 65-1138 (10 November 1965).

4.34 Preliminary Study of LM Communications Subsystem Configuration and Reliability/Maintainability for the ELOR Mission. RCA, Defense Communications Systems Division (5 August 1968).

4.35 The Multiple External Communications System Concept. RCA Defense Communications System Division, Paper by L. Barney et al. (Dec 1966).

4.36 Orbital Fuel Cell. Allis-Chalmers for Air Force Propulsion Laboratory, AFAPL-TR-67-164 (March 1968).

4.37 Apollo Extention Systems—Lunar Excursion Module Phase B Volume VI; Taxi Design Analysis Summary, Final Report. Grumman Aircraft Engineering Company, CR 708785 (Dec 8 1965).

5.1 Carpenter, Roy B., Jr. Space System Malfunction Isolation, Luck or Logic. 2nd National Conference on Space Maintenance and Extra Vehicular Activity, Aug 8, 1968, Los Vegas, Nevada.