https://ntrs.nasa.gov/search.jsp?R=19690018936 2018-07-26T08:43:51+00:00Z

LEHIGH UNIVERSITY INSTITUTE OF RESEARCH

National Aeronautics and Space Administration

Grant NGR-39-007-025

N 69 28314

NASA CR 101469

Technical Report No. 6

BENDING OF A CRACKED PLATE WITH ARBITRARY STRESS DISTRIBUTION ACROSS THE THICKNESS

CASE FILE COPY

by

G. C. Sih

April 1969

Department of Mechanical Engineering and Applied Mechanics
Lehigh University, Bethlehem, Pennsylvania 18015

BENDING OF A CRACKED PLATE WITH ARBITRARY STRESS DISTRIBUTION ACROSS THE THICKNESS[1]

by

G. C. Sih[2]

Abstract

A theoretical study is carried out to examine the influence of plate thickness on the stress state ahead of a through crack in a bent plate of infinite extent. The approach used rests on a theory in which no restrictions are placed on the mode of the stress distribution across the thickness of the plate. A knowledge of the local stresses or moments of the ensuing stress- or moment-intensity factor is held important in connection with modern views on the theory of crack propagation. The results show that the bending stresses local to the crack tip are drastically changed when the plate thickness increases from zero to some finite, but small, value. This is evidenced by the high elevation of the local moments as the ratio of plate thickness to crack length is perturbed slightly from zero.

[1]This paper was prepared for the Lewis Research Center of the National Aeronautics and Space Administration under Grant NGR-39-007-025.

[2]Professor of Mechanics, Lehigh University, Bethlehem, Pennsylvania

Introduction

Intensification of stresses around through cracks in plates under various loading conditions has been the subject of many past discussions [1]. Problems of this kind are of interest in connection with the theory of crack propagation and are relevant to questions which have been raised concerning the effect of stress variation across the plate thickness on the mechanics of fracture initiation. A characteristic feature of such problems is that they involve highly localized effects in the form of steep stress gradients in the immediate vicinity of the crack front. This type of problems, however, is one of the least understood analytically, mainly because the problem is three-dimensional in character and presents severe mathematical difficulties which are substantially greater than those encountered in the problems of generalized plane stress. One of the reasons is that the crack geometry is no longer planar but three-dimensional in nature. There is the question regarding the uniqueness of solution involving geometric discontinuities, since the stress singularity on the surface layers, where the crack penetrates through the plate, remains to be found. In view of the uncertainties associated with the thickness problem, previous stress analyses on cracked plates are either incomplete [2] or approximation of the actual three-dimensional stress state.

It is the objective of this paper to further improve on the existing solutions [3,4] pertaining to cracked plates deflected out of its own plane, while the case of plates stretched in its own plane may be analyzed in the same way. The results in [3,4] were based on the standard theories [5,6] in which the bending stresses are assumed to vary linearly over the plate thickness, and the transverse shear stresses obey the parabolic law of

distribution, regardless of the value of the plate thickness to crack length ratio, h/2a. In what follows, a more general assumption will be adopted such that the thickness distribution of the bending and transverse shear stresses can be arbitrary and can depend on the thickness h as well as on the crack length 2a.

With a view toward reducing the problem to manageable proportions and yet retaining some of the three-dimensional character of the state of affairs near the crack edge, it is proposed that the stresses may be written as

$$\sigma_x = f_1(z)\ s_x(x,y)\ , \qquad \sigma_y = f_1(z)\ s_y(x,y)\ , \qquad \tau_{xy} = f_1(z)\ t_{xy}(x,y)$$

$$\tau_{xz} = f_2(z)\ t_{xz}(x,y)\ , \qquad \tau_{yz} = f_2(z)\ t_{yz}(x,y) \tag{1}$$

$$\sigma_z = f_3(z)\ s_z(x,y)$$

where σ_x, σ_y and τ_{xy} are the bending stresses, τ_{xz} and τ_{yz} the transverse shear stresses, and σ_z the transverse normal stress. In equations (1), x,y are coordinates in the middle plane of the plate, and z is the thickness coordinate. The functions $f_j(z)$ (j=1,2,3), which govern the stress distribution in the thickness direction, depend on h/2a and may be pre-assigned arbitrarily or according to the experimental measurements.

A system of partial differential equations is solved for the problem of a through crack in an infinite plate, which is otherwise in a state of uniform bending. The problem is reduced to a pair of dual integral equations. Determined in closed elementary form are the singular

character of the bending stresses and the moment-intensity factor which has been known in fracture mechanics to control the onset of crack extension in brittle materials.

Fundamental equations for the crack problem

Consider the elastic equilibrium of an infinite plate of thickness h containing a crack of length 2a along the y-axis as in Fig. 1. The material of the plate is isotropic and homogeneous with Young's modulus E and Poisson's ratio ν. For plate bending problems, it is convenient to introduce the definition of bending and twisting moments denoted by M_x, M_y and H_{xy}, and transverse shear forces by V_x, V_y, i.e.,

$$[M_x, M_y, H_{xy}] = \int_{-h/2}^{h/2} [\sigma_x, \sigma_y, \tau_{xy}]\, z\, dz = [s_x, s_y, t_{xy}]$$

$$[V_x, V_y] = \int_{-h/2}^{h/2} [\tau_{xz}, \tau_{yz}]\, dz = [t_{xz}, t_{yz}] \tag{2}$$

in which the functions $f_j(z)$ (j=1,2) are assumed to be normalized so that

$$\int_{-h/2}^{h/2} f_1(z)\, z\, dz = 1\,, \qquad \int_{-h/2}^{h/2} f_2(z)\, dz = 1 \tag{3}$$

With the aid of eqs. (2) and (3), the stresses in eqs. (1) become

$$\sigma_x = f_1(z)\, M_x\,, \qquad \sigma_y = f_1(z)\, M_y\,, \qquad \tau_{xy} = f_1(z)\, H_{xy}$$

$$\tau_{xz} = f_2(z)\, V_x\,, \qquad \tau_{yz} = f_2(z)\, V_y \tag{4}$$

where the expression for σ_z remains unchanged. In the present analysis, the

surfaces of the plate located at $z = \pm h/2$ are free from normal and shear stresses and hence it is necessary to require

$$\tau_{xz} = \tau_{yz} = \sigma_z = 0 \qquad \text{for} \qquad z = \pm h/2 \tag{5}$$

Now, multiplying the stress equations of equilibrium in the x- and y-directions by z dz, the equilibrium equation in the z-direction by dz, and integrating through the plate thickness from -h/2 to h/2 lead to the three standard equations [6] of equilibrium in terms of M_x, M_y, H_{xy}, V_x and V_y provided that

$$f_1(z) = -\frac{df_2(z)}{dz} \tag{6}$$

Using the definition of the weighted averages of the displacements u_x, u_y and u_z across the plate thickness

$$[U_x, U_y, U_z] = \int_{-h/2}^{h/2} [f_1(z)\, u_x, f_1(z)\, u_y, f_2(z)\, u_z]\, dz$$

it can be deduced directly from the three-dimensional equations of elasticity or shown from the work in [7] that

$$\begin{aligned}
M_x &= -\frac{E}{(1-\nu^2)I_1}\left(\frac{\partial^2 U_z}{\partial x^2} + \nu\frac{\partial^2 U_z}{\partial y^2}\right) + 2\frac{I_2}{I_1}\frac{\partial^2\varphi}{\partial x\partial y} \\
M_y &= -\frac{E}{(1-\nu^2)I_1}\left(\frac{\partial^2 U_z}{\partial y^2} + \nu\frac{\partial^2 U_z}{\partial x^2}\right) - 2\frac{I_2}{I_1}\frac{\partial^2\varphi}{\partial x\partial y} \\
H_{xy} &= -\frac{E}{(1+\nu)I_1}\frac{\partial^2 U_z}{\partial x\partial y} + \frac{I_2}{I_1}\left(\frac{\partial^2\varphi}{\partial y^2} - \frac{\partial^2\varphi}{\partial x^2}\right) \\
V_x &= \frac{\partial\varphi}{\partial y}, \qquad V_y = -\frac{\partial\varphi}{\partial x}
\end{aligned} \tag{7}$$

The parameters I_j (j=1,2) stand for

$$I_1 = \int_{-h/2}^{h/2} [f_1(z)]^2 dz \quad , \qquad I_2 = \int_{-h/2}^{h/2} [f_2(z)]^2 dz \tag{8}$$

The functions U_z and φ are required to satisfy the two third order differential equations

$$\begin{aligned} &\frac{\partial}{\partial x}(\varphi - \frac{I_2}{I_1}\nabla^2\varphi) - \frac{E}{(1-\nu^2)I_1}\frac{\partial}{\partial y}(\nabla^2 U_z) = 0 \\ &\frac{\partial}{\partial y}(\varphi - \frac{I_2}{I_1}\nabla^2\varphi) + \frac{E}{(1-\nu^2)I_1}\frac{\partial}{\partial x}(\nabla^2 U_z) = 0 \end{aligned} \tag{9}$$

where ∇^2 is the Laplacian operator in two dimensions. Once U_z and φ are known, the genralized displacements U_x and U_y are obtainable from

$$\begin{aligned} U_x &= -\frac{\partial U_z}{\partial x} + \frac{2(1+\nu)I_2}{E}\frac{\partial\varphi}{\partial y} \\ U_y &= -\frac{\partial U_z}{\partial y} - \frac{2(1+\nu)I_2}{E}\frac{\partial\varphi}{\partial x} \end{aligned} \tag{10}$$

Referring to Fig. 1, equal and opposite surface moments m(y) are applied to the crack which is opened out symmetrically with respect to both the x- and y-axes. Because of symmetry, the quantities V_x and H_{xy} must vanish along the entire y-axis, i.e.,

$$V_x(o,y) = H_{xy}(o,y) = 0 \quad \text{for all } y \tag{11}$$

The remaining conditions inside and outside the segment y = -a and y = a are

$$U_x(o,y) = 0 \ , \quad y > a \quad ; \quad M_x(o,y) = -\ m(y) \quad , \quad y < a \tag{12}$$

In order to satisfy eqs. (11) automatically, the solution to eqs. (9) is taken as

$$U_z(x,y) = \frac{(1+\nu)I_1}{\pi E}\int_0^\infty \alpha^{-2}A(\alpha)[(1-\nu)\alpha x - (1+\nu)]\exp(-\alpha x)\cos\alpha y\, d\alpha\ , \quad x > 0$$

$$\varphi(x,y) = \frac{2}{\pi}\int_0^\infty A(\alpha)\left\{\exp[(\alpha - \sqrt{\alpha^2+\beta^2})x] - 1\right\}\exp(-\alpha x)\sin\alpha y\, d\alpha\ , \quad x > 0 \tag{13}$$

where $\beta = (I_1/I_2)^{1/2}$. Substituting eqs. (13) into the first of eqs. (7) and (10), and applying the conditions in eqs. (12) result in the dual integral equations

$$\int_0^\infty \alpha^{-1}A(\alpha)\cos\alpha y\, d\alpha = 0\ , \quad |y| > a$$

$$\int_0^\infty A(\alpha)\,[3+\nu + (2\alpha/\beta)^2(1-\alpha^{-1}\sqrt{\alpha^2+\beta^2})]\cos\alpha y\, d\alpha = -\pi m(y)\ , \quad |y| < a \tag{14}$$

solving for the only unknown function $A(\alpha)$. Note that eqs. (14) can be solved for arbitrary distribution of stresses along the z-direction. This will be discussed in the next section.

Stress distribution across the plate thickness

Experiment work on the stretching of cracked plates has demonstrated that the thickness of the plate can exert a significant effect on the fracture stress and that the stresses can vary appreciably along the crack edge depending upon the crack size and the plate thickness. Herein, a theoretical treatment of the thickness effect due to bending will be carried out by the semi-inverse method described earlier. The z-dependence of the stresses will be assumed by specifying the functions $f_j(z)$ $(j=1,2)$. For bending loads, the variation of the transverse shear stresses τ_{xz} and τ_{yz} is distributed symmetrically about the midplane of the plate. In other words, $f_2(z)$ must be an even function of z. A suitable form of $f_2(z)$ is

$$b_o h\, f_2(z) = b_o - \sum_{n=1}^{m} (-1)^n\, b_n \cos\left(\frac{2\pi n z}{h}\right) \tag{15}$$

where

$$b_n = \left[1 + \left(\frac{2an}{h}\right)^2\right]^{-1}, \quad n = 1,2,\cdots,m$$

The constant b_o is fixed such that the first two boundary conditions in eqs. (5) are satisfied. This gives

$$b_o = \sum_{n=1}^{m} b_n$$

The last condition in eqs. (5) is satisfied by assuming that the magnitude of the transverse normal stress is everywhere small. A plot of the z-variation of τ_{xz} and τ_{yz} with the normalized distance in the thickness direction for different values of h/2a is given in Fig. 2. Presumably the transverse shear stresses achieve greater magnitudes as the plate thickness is increased. The magnitude at the midplane assumes a maximum and then decreases to zero at the plate surface as required by the boundary condition. Inserting eq. (15) into (6), the z-dependence of the in-plane stresses is determined:

$$b_o h\, f_1(z) = -\frac{2\pi}{h} \sum_{n=1}^{m} (-1)^n\, n\, b_n \sin\left(\frac{2\pi n z}{h}\right) \tag{16}$$

which is odd in z. It can be easily verified that both eqs. (15) and (16) satisfy the normalization conditions specified in eqs. (3).

For the purpose of assisting the numerical calculation later on, the constant β will be evaluated through the parameters I_1 and I_2. With the help of eqs. (15) and (16), eqs. (8) can be integrated to render

$$I_1 = \frac{4\pi^2}{b_o^2 h^4} \sum_{n=1}^{m} n^2\, b_n^2$$

and

$$I_2 = \frac{2}{b_o^2 h^2} [b_o^2 + \frac{1}{2} \sum_{n=1}^{m} b_n^2]$$

It follows that β can be determined from

$$\frac{2}{\beta h} = \left[\frac{b_o^2 + \frac{1}{2} \sum_{n=1}^{m} b_n^2}{(\pi^2/2) \sum_{n=1}^{m} n^2 b_n^2} \right]^{\frac{1}{2}} \tag{17}$$

As it is apparent from Fig. 3, the numerical values of βh are determined for a wide range of the plate thickness to crack length ratio, h/2a.

Moment and shear forces near the crack

Characteristics of the elastic stresses local to the crack are germane to study of brittle fracture since these are the stresses which provide the environment for possible crack propagation. Theoretical foundation of the fracture mechanics will not be given here as these principles [1] are well known by all workers in the field.

From the system of dual integral equations stated in eqs. (14), the singular behavior of the stresses or moments may be obtained. A detailed discussion on the method of solving eqs. (14) can be found in [4]. Here, only the final result will be given for the special case of a crack subjected to uniform bending moments, $m(y) = m_o$ = constant, applied to the crack surfaces. The solution to the problem of a free-surface crack opened out by constant moments at infinity can be easily deduced by means of superposition. For the present problem, it can be verified that [4]

$$A(\alpha) = \frac{\pi m_o a}{(1+\nu)} \left\{ - \Psi(1) J_1(\alpha a) + \int_o^1 s J_1(\alpha a s) \frac{d}{ds}[\frac{\Psi(s)}{s}] ds \right\} \tag{18}$$

indeed satisfies eqs. (14). In eq. (18), J_1 is the first order Bessel function of the first kind. The function Ψ, which takes the definite limit $\Psi(1)$ at the crack tip, depends on the ratio h/2a and the Poisson's ratio ν, and it is to be determined numerically from the integral equation

$$\Psi(s) + \int_0^1 F(s,t)\,\Psi(t)\,dt = \sqrt{s}\ , \qquad s < 1 \qquad (19)$$

The kernel function in eq. (19) takes the form

$$F(s,t) = \frac{\sqrt{st}}{1+\nu}\int_0^\infty p\left\{2 + [2(\frac{h}{2a})(\frac{2}{\beta h})p]^2\,[1 - p^{-1}\sqrt{p^2+(\frac{2a}{h})^2(\frac{\beta h}{2})^2}\,]\right\}\cdot$$

$$\cdot\ J_o(sp)\,J_o(tp)\,dp$$

where J_o is the zero order Bessel function of the first kind. The numerical values of Ψ will be reported subsequently.

It is now more pertinent to find the singular character of the solution near the endpoints of the crack. The dominating terms whose contributions to the moments M_x, M_y and H_{xy} become unbounded at the crack tips can be identified with the leading term in eq. (18). Upon introduction of the polar coordinates (r,θ), (r_1,θ_1) and (r_2,θ_2) as indicated in Fig. 1 and making use of eqs. (7), (13) and (18), it is found after considerable amount of manipulations that

$$M_x = \frac{\Psi(1)m_o a}{\sqrt{r_1 r_2}}\,[\frac{r}{a}\cos(\frac{\theta_1+\theta_2}{2}) - \theta) + \frac{ax}{r_1 r_2}\sin\tfrac{3}{2}(\theta_1+\theta_2)]$$

$$M_y = \frac{\Psi(1)m_o a}{\sqrt{r_1 r_2}}\,[\frac{r}{a}\cos(\frac{\theta_1+\theta_2}{2} - \theta) - \frac{ax}{r_1 r_2}\sin\tfrac{3}{2}(\theta_1+\theta_2)] \qquad (20)$$

$$H_{xy} = \frac{\Psi(1)m_o a}{\sqrt{r_1 r_2}}\,[\frac{ax}{r_1 r_2}\cos\tfrac{3}{2}(\theta_1+\theta_2)]$$

Those terms which are bounded at the singular crack points have been neglected. Since the transverse shear forces are finite as $r_1 r_2 \to 0$, the fracture behavior of cracked plates in bending is mainly controlled by the moment quantities shown in eq. (20). At this point it is appropriate to define a moment-intensity factor K by taking the sum of M_x and M_y as r_2 or r_1 approaches zero, i.e.,

$$M_x + M_y = \frac{K}{\sqrt{2r_1}} \cos\frac{\theta_2}{2} \quad , \qquad \text{as } r_1 \to 0$$

or

$$M_x + M_y = \frac{K}{\sqrt{2r_2}} \cos\frac{\pi-\theta_1}{2} \quad , \qquad \text{as } r_2 \to 0$$

where K is given by

$$K = \Psi(1) m_o \sqrt{a} \tag{21}$$

In each case, the moments are shown to be inversely proportional to the square root of the radial distances measured from the crack tips. Hence, K may be interpretated as the strength of the moments in the circular regions with radii r_1 and r_2 centered at $y = -a$ and $y = a$, respectively, and it is indicative of the condition under which fracture may be triggered in structures under bending loads. Further, it serves as an useful parameter for collating fracture data in static and fatigue tests.

The numerical evaluation of the function $\Psi(1)$ in eq. (21) was done on an electronic computer for various values of h/2a, $2/\beta h$ and for the values of Poisson's ratio $\nu = 0.0, 0.3, 0.5$. The dimensionless parameter $2/\beta h$ is fixed for a given value of the thickness-to-crack length ratio in accordance with eq. (17). Fig. 4 displays the dependence of the normalized moment-intensity factor upon h/2a. Initially, the curves rise abruptly as the ratio h/2a departs from zero and then they climb gradually with increasing values of h/2a. It is

also evident from Fig. 4 that the influence of the increase of Poisson's ratio is to raise the amplitudes of the moment-intensity factor curves. The percentage of increase of $K/m_o\sqrt{a}$, however, is lowered for increasing values of ν. Specifically, if the crack length to plate thickness ratio is 5 to 1, the amount of increase for $K/m_o\sqrt{a}$ is 94.5% for $\nu = 0.0$, 77.0% for $\nu = 0.3$ and 68.3% for $\nu = 0.5$. These results and the factors brought out in this analysis should be of significance to those observing the thickness behavior of cracked plates experimentally.

Discussions

The advantage which the system of equations in this paper possesses as compared with the exact equations of three-dimensional elasticity is that the number of independent variables is reduced from three to two. In particular, eqs. (9) permit an explicit solution of the mixed boundary-value problem of a finite thickness plate containing a crack since the theory makes provision for the specification of the displacements as well as the stresses.

While the plate bending analysis of the crack problem involving a more general assumed variation of the stresses through the plate thickness has revealed some interesting and important features, there is considerable work yet to be accomplished. Leaving aside the question of the character of the stress singularity at the intersection of the crack edge with the free plate surface, one immediate improvement on the plate bending problem might be mentioned.

It has been reported by Sih et al [2] that the two-dimensional condition of plane strain, characterized by the relation $\sigma_z = \nu(\sigma_x + \sigma_y)$, prevails in the proximity of a through crack in a plate with finite thickness. This condition was derived in [2] using the exact three-dimensional equations

of elasticity and was shown to be valid only in the interior region of the plate. As remarked previously, the crack front stress state on the surface of the plate is still not known.

Preliminary work on incorporating the plane strain condition into a plate bending (or stretching) theory by application of the variational principles has been made. On the basis of the equilibrium state of stress in eqs. (1), a best approximation is obtained by determining s_x, s_y, etc. such that the strain energy of the body becomes as small as is possible. Briefly, the variational procedure leads to a system of three simultaneous partial differential equations

$$
\begin{aligned}
&(c_1^4 + c_2^4)\,\nabla^4 U_z - 2c_1^2\,\nabla^2 U_z + U_z = 0 \\
&t_{xz} - c_1^2\,\nabla^2 t_{xz} = -\frac{(1-\nu)c_o}{c_1^4+(1-\nu)^2 c_2^4}\,\frac{\partial\Phi}{\partial x} \qquad (22)\\
&t_{yz} - c_1^2\,\nabla^2 t_{yz} = -\frac{(1-\nu)c_o}{c_1^4+(1-\nu)^2 c_2^4}\,\frac{\partial\Phi}{\partial y}
\end{aligned}
$$

solving for U_z, t_{xz} and t_{yz} from which the remaining unknowns can be found. In eqs. (22), Φ is related to U_z by

$$\Phi = [c_1^4 + (1-\nu)c_2^4]\,\nabla^2 U_z - c_1^2\,U_z$$

and c_o, c_1, c_2 are constants depending upon the plate material and geometry as given by

$$c_o = \frac{3}{2I_1}\left[\frac{Eh^3}{12(1-\nu^2)}\right], \qquad c_1^2 = \left(\frac{h}{2}\right)^2 \frac{I_2}{I_1}, \qquad c_2^4 = \left(\frac{h}{2}\right)^4 \frac{1}{1-\nu^2}\left[\frac{I_3}{I_1} - \left(\frac{I_2}{I_1}\right)^2\right]$$

The additional parameter introduced in the new theory is

$$I_3 = \int_{-h/2}^{h/2} [f_3(z)]^2 \, dz$$

whereas I_1 and I_2 are the same as those shown in eqs. (8). The function $f_3(z)$ is constructed in such a way that the condition $\sigma_z = \nu(\sigma_x + \sigma_y)$ is fulfilled.

Calculations leading to more refined estimates of the stress-field parameters which are important to the understanding of brittle-fracture mechanics of cracked plates in bending and stretching are currently underway.

Acknowledgement

This research was supported by the United States National Aeronautics and Space Administration under Grant NGR-39-007-025, monitored by the Lewis Research Center. The author is grateful to Mr. J. E. Srawley for his constant encouragement and enthusiam in this work and to Mr. T. Chen for his assistance in preparing the computer program.

References

[1] Sih, G. C. and Liebowitz, H. "Mathematical theories of brittle fracture", Mathematical Fundamentals of Fracture, Vol. 2, Academic Press, New York, 1968, pp. 30-79.

[2] Sih, G. C., Williams, M. L. and Swedlow, J. L. "Three-dimensional stress distribution near a sharp crack in a plate of finite thickness", Air Force Materials Laboratory, Wright-Patterson Air Force Base, Report No. AFML-TR 66-242, 1966.

[3] Sih, G. C. "Flexural problems of cracks in mixed media", Proceedings of the First International Conference on Fracture, Vol. 1, Sendai, Japan, 1965, pp. 391-409.

[4] Hartranft, R. J. and Sih, G. C. "Effect of plate thickness on the bending stress distribution around through cracks", Journal of Mathematics and Physics, to be published.

[5] Kirchhoff, G. "Uber das gleichgewicht und die bewegung einer elastischen scheibe", Journal reine u. angew. Mathematik, Vol. 40, 1850, pp. 51-88.

[6] Reissner, E. "The effect of transverse shear deformation on the bending of leastic plates", Journal of Applied Mechanics, Vol. 67, 1945, pp. A69-77.

[7] Goldenweizer, A. L. "On Reissner's plate theory", Izvestia Akademii Nauk SSSR, O. T. N. No. 4, 1958, pp. 102-109.

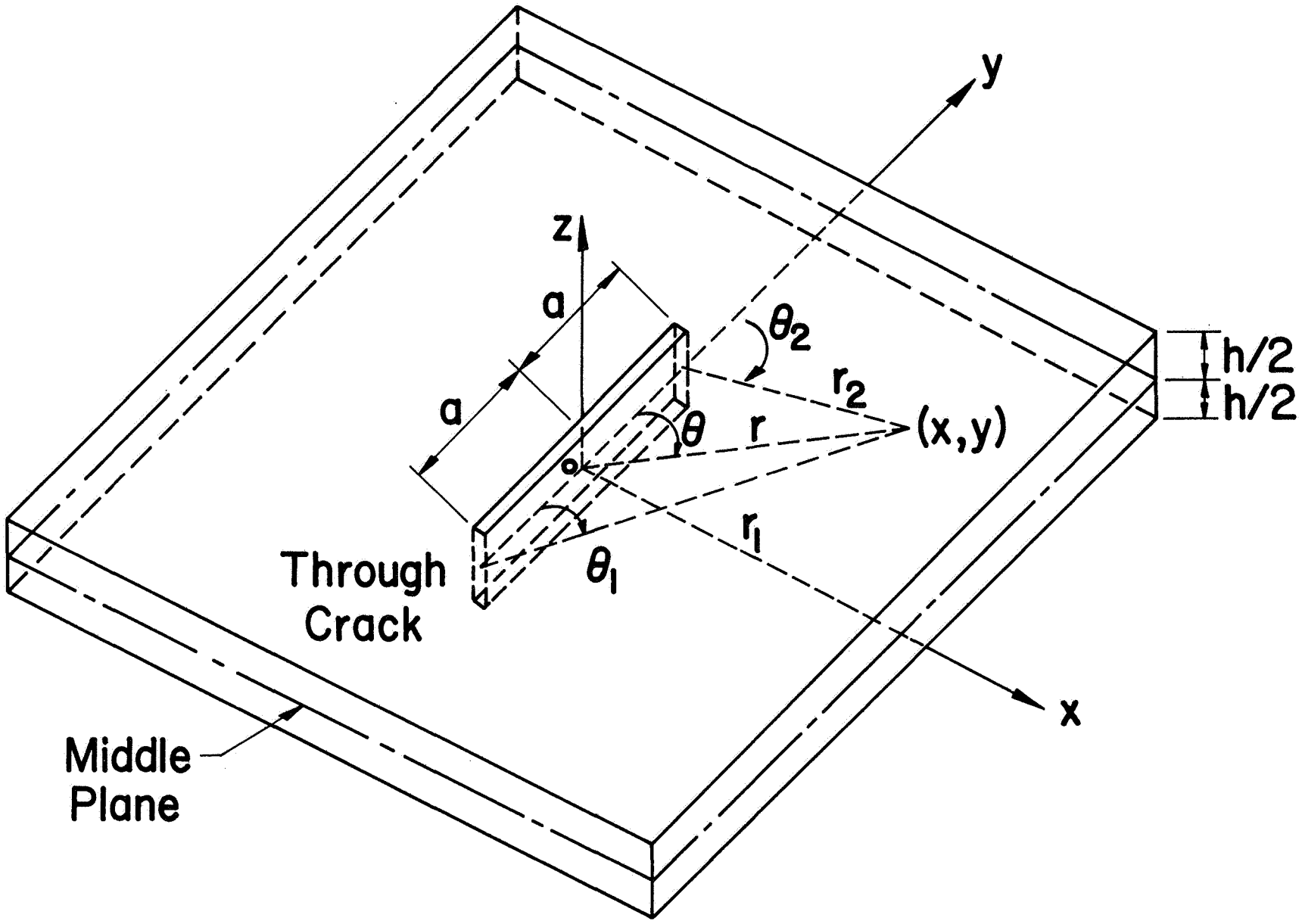

Fig. 1 - Polar coordinates around crack in bending.

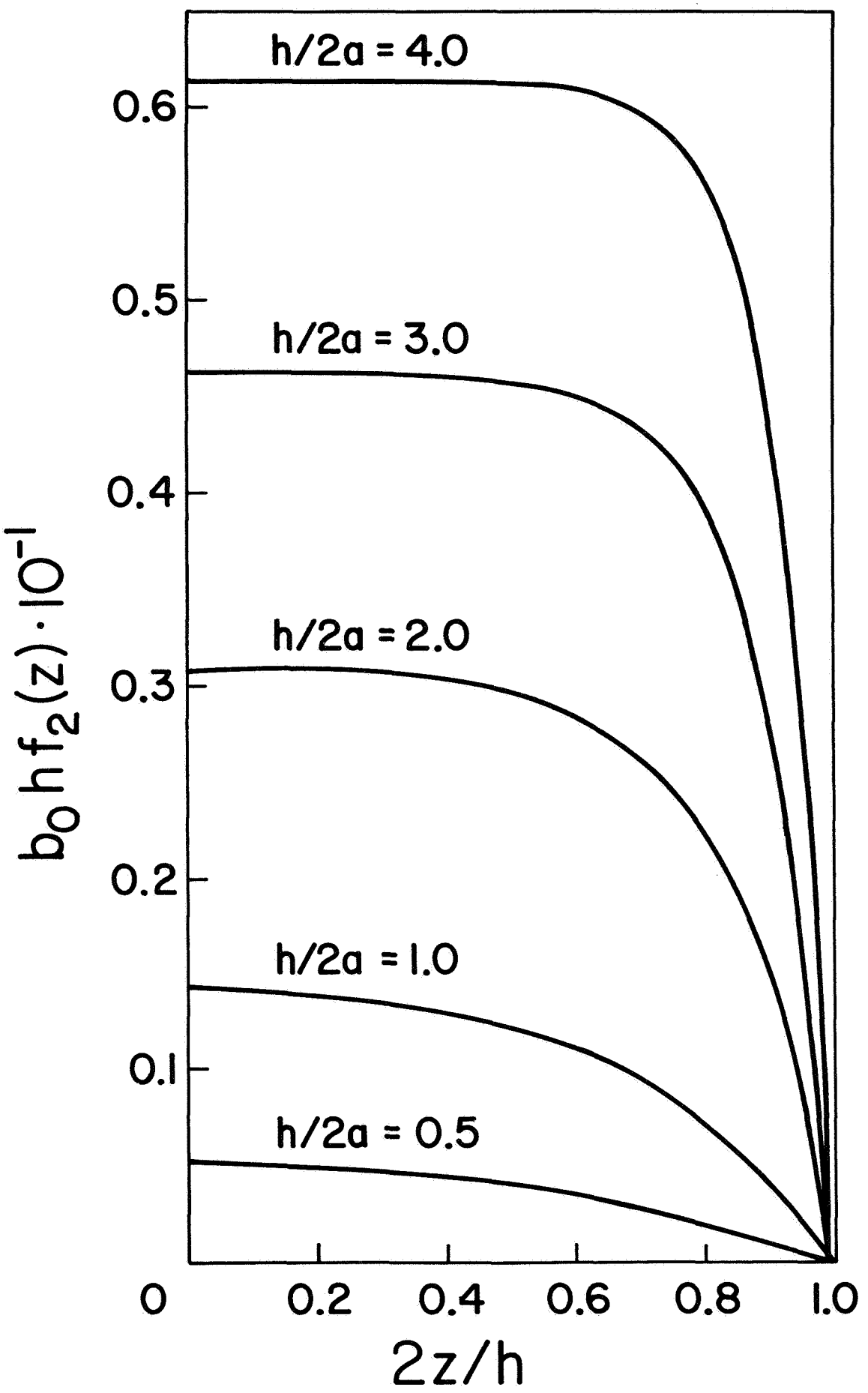

Fig. 2 - Transverse shear stress distribution across half plate thickness.

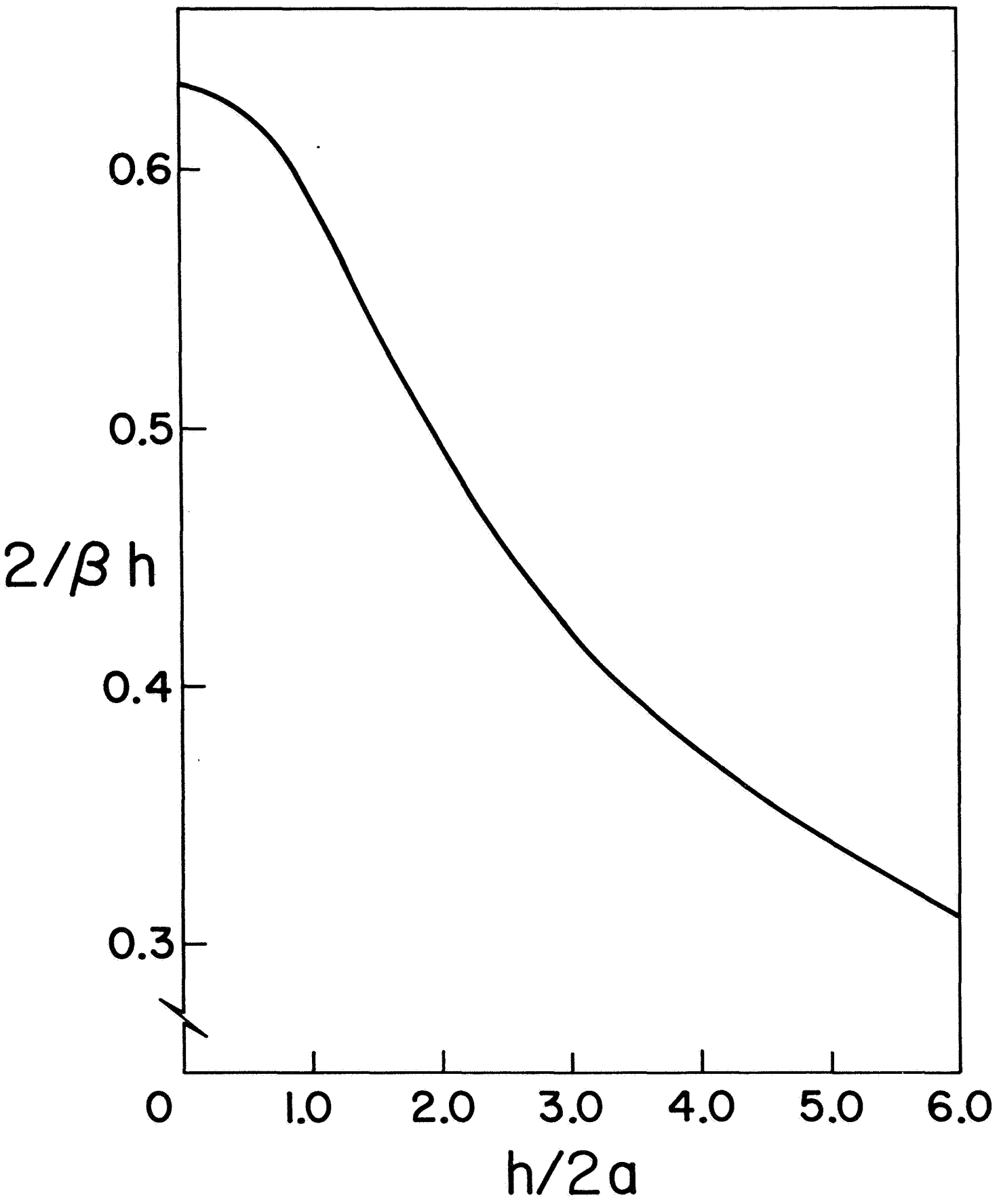

Fig. 3 - Variation of βh with h/2a.

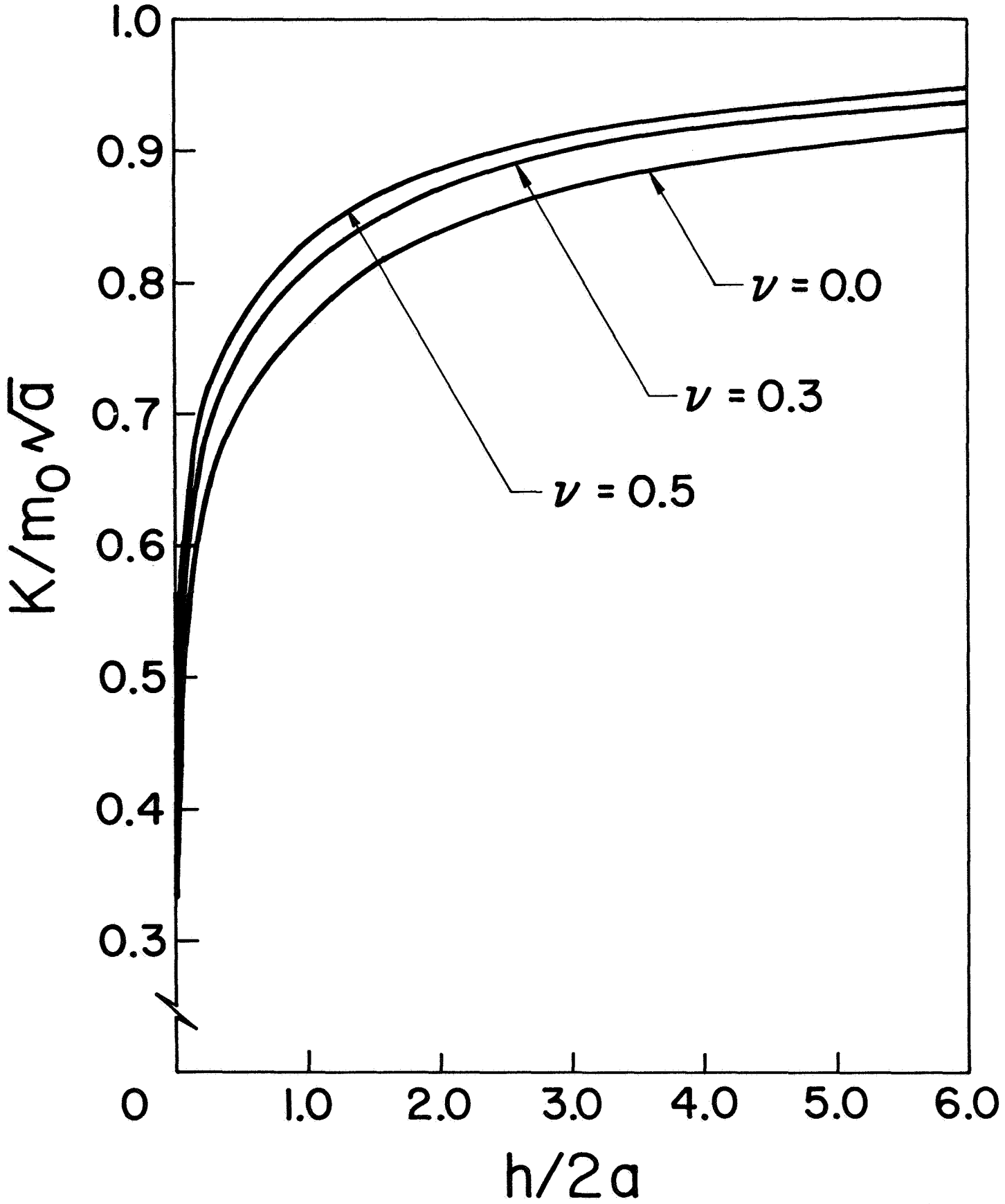

Fig. 4 - Nondimensional moment-intensity factor for different plate thickness to crack length ratio and Poisson's ratio.