https://ntrs.nasa.gov/search.jsp?R=19690022012 2018-07-19T19:40:04+00:00Z

N64-31390
NASA CR-103317

STRESS INTENSITY FACTOR AND CRACK OPENING FOR A LINEARLY VISCOELASTIC STRIP WITH A SLOWLY PROPAGATING CENTRAL CRACK

H. K. Mueller

CASE FILE COPY

GALCIT SM 69-5 JUNE 1969

This work was supported by the
National Aeronautics and Space Administration
Research Grant No. NGL-05-002-005
GALCIT 120

Firestone Flight Sciences Laboratory
Graduate Aeronautical Laboratories
California Institute of Technology
Pasadena, California

STRESS INTENSITY FACTOR AND CRACK OPENING FOR A LINEARLY VISCOELASTIC STRIP WITH A SLOWLY PROPAGATING CENTRAL CRACK

H. K. Mueller*

ABSTRACT

The stress intensity factor and crack opening have been calculated for a linearly viscoelastic strip with a slowly propagating central crack. The edges of the infinitely long strip are displaced normal to the crack and the cases of clamped and shearfree strip edges have been investigated. The results are based on the solution to the problem of a suddenly loaded strip with a stationary crack. The resulting integral equation has been solved numerically for arbitrary crack length and analytical solutions in form of asymptotic series are given for crack length up to about half the strip width. The response to a propagating crack is found by superposition.

*Research Fellow, California Institute of Technology, Pasadena, California.

This work represents part of a Ph. D. Thesis submitted to the California Institute of Technology. The author gratefully acknowledges the support of this work by the National Aeronautics and Space Administration under Research Grant NGL-05-002-005, GALCIT 120.

Introduction

Long narrow strips with a crack along the centerline are particularly useful and convenient test specimens for experimental studies of crack propagation in viscoelastic materials [1, 2, 3, 4]. The energy dissipation due to internal viscosity strongly affects the fracture mechanism in this class of materials and the typical rates of crack propagation are orders of magnitude smaller than the ones encountered in brittle materials [5, 6]. The results to be presented in this note can be used to theoretically estimate the rate of this energy dissipation as a function of crack velocity [4, 7].

Infinitely long elastic strips with cracks have been the subject of several theoretical investigations. Among them the work of Sneddon [8], Knauss [9] and Lowengrub [10] should be mentioned in the context of this note. A detailed description of the stresses in a strip with clamped edges displaced normal to the semi-infinite crack has been given by Knauss [9]. Lowengrub [10] derived analytical solutions for small central cracks in a strip with shearfree edges. In this note the experimentally important case of clamped strip edges displaced normal to the crack has been considered in addition to shearfree edges displaced in the same manner. The latter case can be looked upon as a segment of an infinite plate containing an array of equally spaced cracks. The crack tips are assumed to propagate with equal speeds in opposite directions.

The problem of a suddenly loaded strip with stationary crack is considered first. The Fourier transform method suggested by Sneddon [8] is applied to solve the associated elastic problem. The

resulting integral equation is solved numerically for arbitrary crack length and analytical solutions in the form of asymptotic series have been obtained for crack length up to about half the strip width. The solution to the problem of a propagating crack is then obtained by superposition. The case of a crack propagating through an infinite plate is contained in this study as a limit case.

Formulation of the Problem

The geometry under consideration is shown in figure 1. The linearly viscoelastic strip is infinitely long and has unit thickness. All other dimensions of the strip are large compared to unity and a state of plane stress is assumed to exist throughout the strip. The strip edges are placed at $y = \pm b$ and a crack extends along the x-axis from $x = -a$ to $x = a$. The two crack tips propagate in opposite directions of the x-axis with equal velocities v. Only small crack velocities will be considered and the inertia terms in the governing equations are neglected. A constant lateral strain ε_o is produced in the strip far away from the crack tips by a parallel displacement of the strip edges. The final answers will be restricted to times at which the strip is in its long time or relaxed state far away from the crack tips. In this case the state of stress is only a function of the crack length and the crack opening depends only on the crack length and the crack velocity in addition to the material properties. The stress state and crack opening due to a step strain or any other strain history, however, could also be easily calculated.

Two sets of boundary conditions at $y = \pm b$ will be considered. Case 1 denotes clamped strip edges, i. e.,

$$y = \pm b \; : \quad u_y(x, \pm b) = b\varepsilon_o \tag{1a}$$

$$u_x(x, \pm b) = 0 \tag{1b}$$

and Case 2 describes shearfree strip edges

$$y = \pm b \; : \quad u_y(x, \pm b) = b\varepsilon_o \tag{2a}$$

$$\sigma_{xy}(x, \pm b) = 0 \tag{2b}$$

where the subscripts x and y denote the corresponding components of stress σ and displacement u in Cartesian coordinates. The second case may also be looked upon as a strip segment of an infinite plate containing an infinite row of cracks of equal length spaced in intervals of 2b along the y-axis.

The strip material is linearly viscoelastic and superposition can be used to simplify the solution of the problem. The stress and strain fields in the strip can be obtained by adding the corresponding fields in a strip without crack subject to the desired boundary conditions (1a, b) or (2a, b), cf. figure 2a, and in a strip with crack under a certain internal pressure and subject to appropriate boundary conditions, cf. figure 2b. Due to the symmetry of the problem it suffices to consider only half the strip as in figure 2. The conditions of vanishing shear stress σ_{xy} and displacements in the y-direction except for $|x| < a$ have then to be imposed along $y = 0$. The pressure σ_o in the crack has the same magnitude as the tensile stress in the y-direction which exists in the strip without crack. This stress σ_{yy} may be a function of time due to the time dependence of the material properties or due to time dependent displacements of the strip edges. For constant displacements and in the case of long-time equilibrium the pressure in the crack is simply given by

$$\sigma_o = \varepsilon_o E_r$$

where E_r denotes the long time or rubbery modulus of the material.

The stresses and strains in the uncracked strip, figure 2a, are readily obtained and only the problem shown in figure 2b remains

to be solved. This is a mixed boundary value problem in which the boundary segments over which stresses or displacements are prescribed change with time and the standard Laplace transform technique for the solution of problems of viscoelasticity cannot be applied in a straightforward manner [11, 12]. In order to circumvent this difficulty we shall first find the response caused by a suddenly applied internal pressure σ_o in a crack of constant length. The solution for a growing crack will then be obtained by a superposition of step loadings.

Solution of the Step-Load Problem

The Laplace transform method can be applied to find the solution to this problem, cf. figure 2b. Applying the Laplace transform in time

$$f(s) = \int_0^\infty f(t)e^{-st}dt$$

to the equilibrium equation, stress-strain relationships and to the strain definition leads to the following statements in transformed space

$$\bar{\sigma}_{ij,j} = 0 \quad ; \qquad \bar{\sigma}_{ij} = \bar{\sigma}_{ji} \tag{3}$$

$$\bar{\sigma}'_{ij} = \frac{\bar{E}}{(1+\bar{\nu})}\,\bar{\varepsilon}'_{ij} \; ; \quad \bar{\sigma}_{kk} = \frac{\bar{E}}{1-2\bar{\nu}}\,\bar{\varepsilon}_{kk} \tag{4}$$

$$\bar{\varepsilon}_{ij} = \frac{1}{2}(\bar{u}_{i,j} + \bar{u}_{j,i}) \tag{5}$$

where a bar denotes the Laplace transform and the indices i, j indicate Cartesian components of the stresses σ, strains ε and displacements u. The counterparts of Young's modulus and Poisson's ratio in the associated elastic problem are denoted by $\bar{E}$ and $\bar{\nu}$, respectively, and the stress and strain deviators are defined as usually

$$\sigma'_{ij} = \sigma_{ij} - \frac{1}{3}\sigma_{kk}\,\delta_{ij}$$

$$\varepsilon'_{ij} = \varepsilon_{ij} - \frac{1}{3}\varepsilon_{kk}\,\delta_{ij}$$

with δ_{ij} standing for the Kronecker delta.

Applying the Laplace transform to the boundary conditions and introducing nondimensionalized coordinates $\xi = \frac{x}{a}$, $\eta = \frac{y}{a}$ leads to

$$\eta = 0 : \quad \bar{\sigma}_{\xi\eta}(\xi, 0, s) = 0 \qquad \text{for } |\xi| < \infty \tag{6a}$$

$$\bar{\sigma}_{\eta\eta}(\xi, 0, s) = -\frac{\sigma_o}{s} \qquad \text{for } |\xi| < 1 \tag{6b}$$

$$\bar{u}_\eta(\xi, 0, s) = 0 \qquad \text{for } |\xi| \geq 1 \tag{6c}$$

$$\eta = \frac{b}{a} : \quad \bar{u}_\eta(\xi, \tfrac{b}{a}, s) = 0 \tag{7a}$$

$$\text{and (Case 1)} \quad \bar{u}_\xi(\xi, \tfrac{b}{a}, s) = 0 \qquad \text{for } |\xi| < \infty \tag{7b}$$

$$\text{or (Case 2)} \quad \bar{\sigma}_{\xi\eta}(\xi, \tfrac{b}{a}, s) = 0 \tag{7c}$$

with s being the Laplace transform variable and Greek subscripts indicating that all lengths are non-dimensionalized by a. The equilibrium equations (3) can be identically satisfied by introducing the Airy stress function $\phi(\xi, \eta)$. In terms of this function the stress components are given by

$$\bar{\sigma}_{\xi\xi} = \frac{\partial^2\phi}{\partial\eta^2}, \quad \bar{\sigma}_{\eta\eta} = \frac{\partial^2\phi}{\partial\xi^2}, \quad \bar{\sigma}_{\xi\eta} = -\frac{\partial^2\phi}{\partial\xi\partial\eta}. \tag{8}$$

Substitution of these expressions into the transformed compatibility equation in two dimensions

$$\left(\frac{\partial^2}{\partial\xi^2} + \frac{\partial^2}{\partial\eta^2}\right)(\bar{\sigma}_{\xi\xi} + \bar{\sigma}_{\eta\eta}) = 0$$

leads to a biharmonic equation for ϕ

$$\nabla^4\phi = \frac{\partial^4\phi}{\partial\xi^4} + 2\frac{\partial^4\phi}{\partial\xi^2\partial\eta^2} + \frac{\partial^4\phi}{\partial\eta^4} = 0 \tag{9}$$

It has been demonstrated by Sneddon [8] that the solution of this equation subject to mixed boundary conditions like the ones stated

in (6) and (7) can be reduced to the solution of a Fredholm integral equation. Applying the Fourier transform

$$f^*(\omega) = \frac{1}{\sqrt{2\pi}} \int_{-\infty}^{\infty} f(x) e^{i\omega x}\, dx$$

in the x variable to equation (9) gives rise to an ordinary 4th order differential equation

$$\omega^4 \phi^* - 2\omega^2 \frac{\partial^2 \phi^*}{\partial \eta^2} + \frac{\partial^4 \phi^*}{\partial \eta^4} = 0 \quad . \tag{10}$$

The Fourier transform is denoted by an asterisk and ω is the Fourier transform variable. Equation (10) is first solved for a pressure distribution $p(\xi)$ on $\eta = 0$ which is arbitrary but symmetrical over the η-axis. The Laplace and Fourier transformed boundary conditions of this problem read

$$\eta = 0 : \quad \bar{\sigma}_{\xi\eta}(\omega, 0) = 0 \tag{11a}$$

$$\bar{\sigma}^*_{\eta\eta}(\omega, 0) = -P_c(\omega) = -\sqrt{2/\pi} \int_0^{\infty} p(\xi)\cos(\omega\xi)d\xi \tag{11b}$$

$$\eta = \frac{b}{a} : \quad \bar{u}^*_{\eta}(\omega, \frac{b}{a}) = 0 \tag{12a}$$

$$\text{and (Case 1)} \quad \bar{u}^*_{\xi}(\omega, \frac{b}{a}) = 0 \tag{12b}$$

$$\text{or (Case 2)} \quad \bar{\sigma}^*_{\xi\eta}(\omega, \frac{b}{a}) = 0 \tag{12c}$$

where the cosine transformation of the arbitrary pressure distribution is denoted by $P_c(\omega)$.

The solution of equation (10) is

$$\phi^*(\omega,\eta) = A\sinh(\omega\eta) + B\cosh(\omega\eta)$$
$$+ C\omega\eta\sinh(\omega\eta) + D\omega\eta\cosh(\omega\eta) \tag{13}$$

with the factors A, B, C, D being functions of ω, the pressure distribution, Poisson's ratio, and the strip geometry only. For the boundary conditions (11a) through (12b), i. e., Case 1, the factors are

$$B^{(1)} = \frac{1}{\omega^2} P_c(\omega)$$
$$A^{(1)} = -D^{(1)} = C^{(1)} \frac{2 + (3-\bar{\nu})\sinh^2(\omega\frac{b}{a})}{(3-\bar{\nu})\sinh(\omega\frac{b}{a})\cosh(\omega\frac{b}{a}) - (1+\bar{\nu})\,\omega\frac{b}{a}}$$
$$= -\frac{P_c(\omega)}{\omega^2}\;\frac{(1+\bar{\nu})(3-\bar{\nu})\sinh(\omega\frac{b}{a})\cosh(\omega\frac{b}{a}) - (1+\bar{\nu})^2\,\omega\frac{b}{a}}{4+(1+\bar{\nu})^2(\omega\frac{b}{a})^2 + (1+\bar{\nu})(3-\bar{\nu})\sinh^2(\omega\frac{b}{a})}$$

Replacing boundary condition (12b) by condition (12c), i. e., Case 2 leads to the following factors

$$B^{(2)} = \frac{1}{\omega^2} P_c(\omega)$$
$$A^{(2)} = -D^{(2)} = C^{(2)} \frac{\sinh(\omega\frac{b}{a})}{\cosh(\omega\frac{b}{a})} \tag{14}$$
$$= -\frac{P_c(\omega)}{\omega^2}\cdot\frac{\sinh^2(\omega\frac{b}{a})}{\omega\frac{b}{a} + \sinh(\omega\frac{b}{a})\cosh(\omega\frac{b}{a})}$$

A bracketed superscript on some quantity will from now on indicate the set of boundary conditions, i. e., Case 1 or Case 2, for which the quantity has been determined. By application of equations (4), (5) and (8) the vertical displacement in transformed space is found to be equal to

$$\bar{u}^*_\eta(\omega, \eta) = \frac{1}{E}\left[-(2+\bar{\nu})\frac{\partial\phi^*}{\partial\eta} + \frac{1}{\omega^2}\frac{\partial^3\phi^*}{\partial\eta^3}\right]$$

For $\eta = 0$ this reduces to the simple expression

$$\bar{u}^*_\eta(\omega, 0) = \frac{2}{\bar{E}}\,\omega D^{(n)}$$

which after inversion of the Fourier transform leads to

$$\bar{u}^{(n)}_\eta(\xi, 0) = \frac{2}{\bar{E}}\sqrt{2/\pi}\int_0^\infty \omega D^{(n)}\cos(\omega\xi)d\omega \tag{15}$$

With the definition

$$P_c(\omega) = \omega[1 + m^{(n)}(\omega\tfrac{b}{a})]\,H^{(n)}(\omega)$$

for a new function $H(\omega)$ equation (15) can be written as

$$\bar{u}^{(n)}_\eta(\xi, 0) = \frac{2}{\bar{E}}\sqrt{2/\pi}\int_0^\infty H^{(n)}(\omega)\cos(\omega\xi)d\omega \tag{16}$$

and the pressure distribution (11b) on $\eta = 0$ can be expressed as

$$\bar{\sigma}^{(n)}_{\eta\eta}(\xi, 0) = -\sqrt{2/\pi}\frac{\partial}{\partial\xi}\int_0^\infty[1+m^{(n)}(\omega\tfrac{b}{a})]\,H^{(n)}(\omega)\sin(\omega\xi)d\omega. \tag{17}$$

The functions $m^{(n)}(r)$; $n = 1, 2$ are

Case 1: $$m^{(1)}(r) = \frac{4+(1-\bar{\nu})^2+2(1+\bar{\nu})^2(1+r)r+(1+\bar{\nu})(3-\bar{\nu})e^{-2r}}{(1+\bar{\nu})(3-\bar{\nu})\sinh(2r)-2r(1+\bar{\nu})^2}$$

Case 2: $$m^{(2)}(r) = \frac{r + e^{-r}\sinh(r)}{\sinh^2(r)}$$

The as yet unsatisfied boundary conditions (6b, c) can now be put in the form

$$\int_0^\infty H^{(n)}(\omega)\cos(\omega\xi) = 0 \qquad \text{for } |\xi| \geq 1 \tag{18a}$$

$$\sqrt{2/\pi}\int_0^\infty [1+m^{(n)}(\omega\tfrac{b}{a})]\, H^{(n)}(\omega)\sin(\omega\xi)d\omega = \frac{\sigma_o}{s}\,\xi \text{ for } |\xi|<1 \tag{18b}$$

The first of these dual integral equations can be identically satisfied [8] by the following representation

$$H(\omega) = \frac{\sigma_o}{s}\int_0^1 Z(r)\, J_o(\omega r)dr \tag{19}$$

where $Z(r)$ is the new unknown function.

Substitution of (19) into equation (18b) leads to an Abel integral equation which can be solved resulting in a Fredholm equation of the second kind for $Z(r)$

$$Z^{(n)}(r) + \int_0^1 Z^{(n)}(r)M^{(n)}(r,q)\, dq = \sqrt{\pi/2}\; r\,. \tag{20}$$

The kernel $M^{(n)}(r,q)$; $n = 1, 2$ depends on the boundary conditions under consideration and is given by

$$M^{(n)}(r,q) = r(\tfrac{a}{b})^2\int_0^\infty \omega m^{(n)}(\omega)\, J_o(\omega q\tfrac{a}{b})\, J_o(\omega r\tfrac{a}{b})d\omega \tag{21}$$

It should be noted that material properties do not enter the kernel $M^{(2)}(r,q)$ which corresponds to shearfree strip boundaries (Case 1).

Once a solution of equation (20) has been found the stress and strain fields of the associated elastic problem (Laplace transformed) can be readily calculated. The displacements and stresses along the strip centerline are particularly easy to determine from equations (16) and (17). They are found to be equal to

$$\bar{u}_{\eta}^{(n)}(\xi, 0) = \frac{\sigma_o}{s\bar{E}(s)} \sqrt{2/\pi} \int_o^{\infty} [\int_o^1 Z^{(n)}(r) J_o(\omega r) dr] \cos(\omega\xi) d\omega \tag{22}$$

$$\bar{\sigma}_{\eta\eta}^{(n)}(\xi, 0) = -\frac{\sigma_o}{s} \sqrt{2/\pi} \int_o^{\infty} \omega[1+m^{(n)}(\omega\frac{b}{a})] \left\{ \int_o^1 Z^{(n)}(r) J_o(\omega r) dr \right\} \cos(\omega\xi) d\omega \tag{23}$$

The bracketed superscripts again distinguish the response due to the two sets of boundary conditions. The inversion of these expressions to real time are trivial if the functions Z and m do not involve Poisson's ratio as in Case 2. The dependence on $\bar{\nu}(s)$ is so complicated in Case 1 that an inversion of the Laplace transform cannot be performed. Values of $\nu = 0.5$ in the rubbery domain and of $\nu = 0.3$ in the glassy domain are generally good approximations of the actual material behavior and Poisson's ratio will be considered a constant in order to be able to invert the transformation.

The following relationship holds between the Laplace transforms of the creep function $D_{cr}(1)$, the relaxation function $E_{rel}(t)$, and Young's modulus $E(t)$

$$\bar{D}_{cr}(s) = \frac{1}{s^2 \bar{E}_{rel}(s)} = \frac{1}{s\bar{E}(s)}$$

Making use of this relationship the inversions of equations (22) and (23) are found to be

$$u_x^{(n)}(x, 0, t) = 2a\sigma_o D_{cr}(t) \sqrt{2/\pi} \int_{x/a}^1 \frac{Z^{(n)}(r) dr}{\sqrt{r^2 - (\frac{x}{a})^2}}, \qquad |x| < a \tag{24}$$

$$\sigma_{\eta\eta}^{(n)}(x, 0) = -\sigma_o \sqrt{2/\pi} \int_o^{\infty} \omega[1+m^{(n)}(\omega\frac{b}{a})] \cos(\omega\frac{x}{a}) \int_o^1 Z^{(n)}(r) J_o(\omega r) dr d\omega, \qquad |x| \geq a \tag{25}$$

where x, y coordinates have been reintroduced. Unless the applied load σ_o is a function of time the stress $\sigma_{\eta\eta}^{(n)}$ is seen to be independent of time.

Solution of the Integral Equation

A closed form solution of equation (20) cannot be found due to the complicated kernel $M^{(n)}(r, q)$. Asymptotic expansions can, however, be established for crack length over strip width ratios a/b which are small compared to unity [10]. The kernel goes to zero as $\frac{a}{b} \to 0$ and the solution of the integral equation is simply

$$Z(r) = \sqrt{\pi/2}\ r \quad .$$

For $\frac{a}{b} << 1$ the Bessel functions in the integrand of (21) can be replaced by the first terms of their series expansions because the function $\omega m^{(n)}$ is rapidly approaching zero as ω increases. The following expression is obtained for the product of Bessel functions

$$J_o(\omega q \frac{a}{b}) J_o(\omega r \frac{a}{b}) = 1 - \frac{1}{4}(\frac{a}{b})^2 (r^2 + q^2)\ \omega^2 + \frac{1}{16}(\frac{a}{b})^4 (\frac{r^2+q^2}{4} + r^2 q^2)\ \omega^4 + \ldots\ldots \quad . \tag{26}$$

Substitution of this expansion into (21) results in

$$M^{(n)}(r, q) = r(\frac{a}{b})^2 [L_1^{(n)} - \frac{1}{4}(\frac{a}{b})^2 (r^2+q^2) L_3^{(n)} + \frac{1}{16}(\frac{a}{b})^4 (\frac{r^4+q^4}{4} + r^2 q^2) L_5^{(n)} + \ldots\ ] \ , \tag{27}$$

where

$$L_m^{(n)} = \int_o^\infty \omega^m\ m^{(n)}(\omega) d\omega \quad .$$

These integrations can easily be carried out in Case 2. In Case 1 (clamped edges), however, the integrands are too complicated and numerical methods have to be applied. The following values have been obtained for the two cases:

	Case 1 n=1 (Clamped strip edges)		Case 2 n = 2 (Shearfree strip edges)
	$\nu = 0.3$	$\nu = 0.5$	
$L_1^{(n)}$	3.0939	3.7529	$(\frac{\pi}{2})^2$
$L_3^{(n)}$	6.617	8.0182	$\frac{2}{3}(\frac{\pi}{2})^4$
$L_5^{(n)}$	54.8456	66.9148	$\frac{112}{63}(\frac{\pi}{2})^6$

With the kernel in the form of expression (27) the integral equation can be solved by the method of repeated substitutions. The result of this operation is

$$Z^{(n)}(r) = r\sqrt{\pi/2}\,\Big[1 - \frac{1}{2}(\frac{a}{b})^2 L_1^{(n)} + \frac{1}{16}(\frac{a}{b})^4\{(1+2r^2)L_3^{(n)} + 4(L_1^{(n)})^2\}$$

$$- \frac{1}{64}(\frac{a}{b})^6\{12(L_1^{(n)})^3 + (6+4r^2)L_1^{(n)}L_3^{(n)} + \frac{1+6r^2+3r^4}{6}L_5^{(n)}\}\Big]$$

$$+ O\Big[(\frac{a}{b})^8\Big] \quad . \qquad (28)$$

For shearfree strip edges (n = 2) and up to terms of order $(\frac{a}{b})^4$ this series has also been given by Lowengrub [10].

A numerical method is the only way in which a solution of equation (20) can be obtained for large values of a/b. The original integral equation is reduced to a system of algebraic equations by writing the integral in (20) as a sum. The elements of this sum are calculated by dividing the interval $0 \leq r \leq 1$ into N segments of equal length and applying some integration formula to each segment. The trapezoidal rule has been used in this case. Solution of the system

of equations by inversion of the coefficient matrix then supplies the values of $Z^{(n)}(r)$ at the points of subdivision.

The numerical solution was first carried out by subdividing the interval $0 \leqslant r \leqslant 1$ into 10 equal parts. In order to check the convergence of the results the number of divisions was doubled. For $a/b = 5$ the difference between the two results was found to be less than 0.02% and this value got smaller with decreasing a/b ratio. This agreement was considered good enough and the interval size was not further decreased.

The results of the numerical solution are graphically presented in figure 3. $Z^{(n)}(r)$ is seen to be a monotonically increasing function of r. It becomes a straight line of slope $\sqrt{\pi/2}$ as a/b approaches zero.

The Stress Intensity Factor

The state of stress in the immediate surrounding of the crack tip is of particular interest with regard to crack propagation studies. The stress component σ_{yy} tends to infinity as the crack tip is approached. The strength of this singularity is commonly expressed in terms of a stress intensity factor. Various definitions of this factor are possible. The following definition of a nondimensional stress intensity factor I will be employed here:

$$I^{(n)} = \lim_{x \to a} \sqrt{\frac{x-a}{b}} \, \frac{\sigma_{yy}^{(n)}(x, 0)}{\sigma_o} ,$$

where σ_o is the normal stress in the y-direction which would exist in the strip if the crack was absent. By substituting expression (25) and forming the limit the stress intensity factor $I^{(n)}$ for a cracked strip, cf. figure 1, can be found. Strictly speaking equation (25) describes only the stresses in a strip under internal pressure, cf. figure 2a, and a stress of magnitude σ_o should be superposed. But the latter is a vanishing contribution as the crack tip is approached and does not affect the magnitude of the stress intensity factor.

The integrals in the expression for $\sigma^{(n)}(x, 0)$ cannot be evaluated in closed form. An investigation [13] of their properties, however, shows that for $x \to a$ the stress is given by

$$\sigma_{yy}^{(n)}(x, 0) = \sigma_o \sqrt{2/\pi} \, \frac{Z^{(n)}(1)}{\sqrt{(\frac{x}{a})^2 - 1} \, [\frac{x}{a} + \sqrt{(\frac{x}{a})^2 - 1}]} , \quad \frac{x}{a} << 1 .$$

The following simple expression for the stress intensity factor is thus obtained

$$I^{(n)}(a/b) = \sqrt{a/b\pi}\; Z^{(n)}(1, a/b) \quad . \tag{29}$$

The ratio a/b has been introduced in the arguments of $I^{(n)}$ and $Z^{(n)}$ to indicate their dependence on the crack length over strip width ratio.

Asymptotic expansions for the intensity factors are readily obtained for small ratios a/b by substitution of the appropriate series expressions for $Z^{(n)}$, cf. equation (28).

Figure 4 shows the stress intensity factors as functions of a/b as calculated from equation (29) on the basis of the numerical and analytical solutions for Z(r). For $a/b < 0.08$ the intensity factors are seen to be equal to the value first obtained by Inglis [14] for an infinitely large plate. As a/b increases the values for $I^{(n)}$ go through a weak maximum which, depending on the case under consideration, lies somewhere between $0.4 < a/b < 0.8$. For $a/b > 0.8$ the stress intensity factors level off and approach the values [15] for semi-infinite cracks

$$I^{(1)} = \sqrt{\frac{1-\nu^2}{2\pi}} \qquad \text{for clamped strip edges (Case 1) and}$$

$$I^{(2)} = \sqrt{\frac{1}{2\pi}} \qquad \text{for shearfree strip edges (Case 2).}$$

For $a/b \geq 1.5$ the stress intensity factors are practically equal to these constant values, i. e., the difference between numerically determined values and the above limits is less than 0.5%.

Depending on the boundary conditions and Poisson's ratio the three term expansions for $I^{(n)}$ based on equation (28) hold up to $a/b < 0.28$ (Case 1, $\nu = 0.5$) or $a/b < 0.37$ (Case 2) with an error

of less than 0.5%.

It should be pointed out again that the stresses depend only through the crack length on the rate of crack propagation. For equal external loadings and equal crack length two cracks propagating with different velocities cause the same stress fields in the viscoelastic strip as long as inertia effects can be neglected.

Crack Opening

The crack opening can also be calculated from the solution to the step load problem since the displacements in the uncracked strip, cf. figure 2a, are zero along the strip centerline y = 0. The opening of a propagating crack can be obtained from the response due to a suddenly applied load (24) via the superposition scheme shown in figure 5. The following superposition integral is easily derived for arbitrary load and crack propagation histories

$$u_y^{(n)}(x, 0, t) = 2\sqrt{2/\pi} \int_0^t D_{cr}(t-\tau) \frac{\partial}{\partial\tau} \sigma_o(\tau) a(\tau) \int_{x/a(\tau)}^1 \frac{Z^{(n)}(r, \frac{a(\tau)}{b}) dr}{\sqrt{r^2 - (\frac{x}{a(\tau)})^2}} d\tau . \tag{30}$$

The opening near the crack tip is of special interest in crack propagation studies. By differentiating the bracketed term in (30) and using integration by parts it can be shown [13] that there is one dominating term as $x \to a$ and a simplified expression for the opening near the propagating crack tip can be derived

$$u_y^{(n)}(x, 0, t) = 2\sqrt{1/\pi} \sqrt{\frac{a(\tau)}{a(\tau)-x}} Z^{(n)}(1, \frac{a(\tau)}{b}) \sigma_o(\tau) \frac{\partial a(\tau)}{\partial} D_{cr}(t-\tau) d\tau ,$$

$$1 - \left|\frac{x}{a(\tau)}\right| << 1 .$$

For time independent loadings σ_o and constant propagation speeds $a(t) = vt$ a more convenient expression is readily obtained

$$u_y^{(n)}(x, 0, t) = 2\sigma_o \int_x^{a(t)} \sqrt{\frac{b}{\zeta - x}} I^{(n)}(\frac{\zeta}{b}) D_{cr}(\frac{a(t)-\zeta}{v}) d\zeta ,$$

$$1 - \left|\frac{x}{a(t)}\right| << 1 . \tag{31}$$

where use has been made of (29) and the new independent variable

$\xi = vt$ has been introduced.

Figure 6 shows the shape of the crack tip as a function of crack velocity for a particular composition of the Polyurethane elastomer Solithane 113 [16], called Solithane 50/50. The contours have been calculated by numerically evaluating (31) for the experimentally determined creep function of this material [16]. At $T = 273^{o}K$ the glassy modulus of Solithane 50/50 is $E_g \cong 63000$ psi and the rubbery modulus is equal to $E_r = 430$ psi. The relaxation time at this temperature is about 1.0 min. For equal stresses σ_o (stress in the strip if there was no crack) the crack tip is seen to become more and more pointed as the crack velocity increases. The very tip of the crack, however, remains blunt but has a radius of curvature which is several orders of magnitude smaller than that of the stationary crack [13].

Conclusions

For crack length over strip width ratios greater than 1.5 the stress intensity factor is practically constant and is equal to the value for a semi-infinite crack in an infinitely long strip. Between $0.4 < \frac{a}{b} < 0.8$ the intensity factor goes through a weak maximum the exact location of which depends on the boundary conditions and Poisson's ratio. For $\frac{a}{b} < 0.08$ the intensity factor is essentially the same as in an infinitely large plate with crack.

The stresses around the crack tip do not depend on the crack velocity provided inertia terms can be neglected in the governing equations and Poisson's ratio can be assumed a constant. The crack opening near the crack tip, however, depends strongly on the rate of crack propagation.

References

1. Rivlin, R. S.; Thomas, A. G.: "Rupture of Rubber. I. Characteristic Energy for Tearing," J. of Polymer Sc., vol. X, No. 3, pp. 29-318 (1953).

2. Thomas, A. G.: "Rupture of Rubber. VI. Further Experiments on the Tear Criterion," J. of Appl. Polymer Sc., vol. III, No. 8, pp. 168-174 (1960).

3. Knauss, W. G.: "Rupture Phenomena in Viscoelastic Materials," Ph. D. Dissertation, California Institute of Technology, Pasadena (1963).

4. Mueller, H. K.; Knauss, W. G.: "The Fracture Energy and Some Mechanical Properties of a Polyurethane Elastomer," GALCIT SM 69-4, California Institute of Technology, Pasadena (1969).

5. Andrews, E. H.: "Fracture in Polymers," American Elsevier, New York (1968).

6. Schardin, H.: "Velocity Effects in Fracture," Conference on Fracture, Swampscott, Massachusetts (1959).

7. Mueller, H. K.; Knauss, W. G.: "Crack Propagation in a Linearly Viscoelastic Strip," GALCIT SM 68-14, California Institute of Technology, Pasadena (1968).

8. Sneddon, I. N.: "The Use of Transform Methods in Elasticity," Technical Report AFOSR 64-1784, Department of Mathematics, North Carolina State College, Raleigh (1964).

9. Knauss, W. G.: "Stresses in an Infinite Strip Containing a Semi-Infinite Crack," J. of Appl. Mechanics, vol. 33, Trans. ASME, Ser. E, pp. 356-362 (1966).

10. Lowengrub, M.: "A Two-Dimensional Crack Problem," Int. J. of Eng. Sc., vol. 4, pp. 289-299 (1966).

11. Lee, E. H.; Radok, J. R. M.; Woodward, W. B.: "Stress Analysis for Viscoelastic Materials," Trans. Soc. of Rheology, vol. 3, pp. 41-59 (1959).

12. Graham, G. A. C.: "The Correspondence Principle of Linear Viscoelasticity Theory for Mixed Boundary Value Problems Involving Time Dependent Boundary Regions," File No. PSR-4712, Appl. Math. Res. Group, North Carolina State Univ., Raleigh (1966).

13. Mueller, H. K.: "Stable Crack Propagation in a Viscoelastic Strip," NASA CR-1279, Washington, D. C. (1969).

14. Inglis, C. E.: "Stresses in a Plate due to the Presence of Cracks and Sharp Corners," Trans. of the Inst. of Naval Architects, London, vol. 60, pp. 219-230 (1913).

15. Rice, J. C.: "Discussion," J. of Appl. Mech., vol. 34, Trans. ASME, Ser. E., pp. 248-249 (1967).

16. Knauss, W. G., Mueller, H. K.: "The Mechanical Characterization of Solithane 113 in the Swollen and Unswollen State," GALCIT SM 67-8, California Institute of Technology, Pasadena (1967).

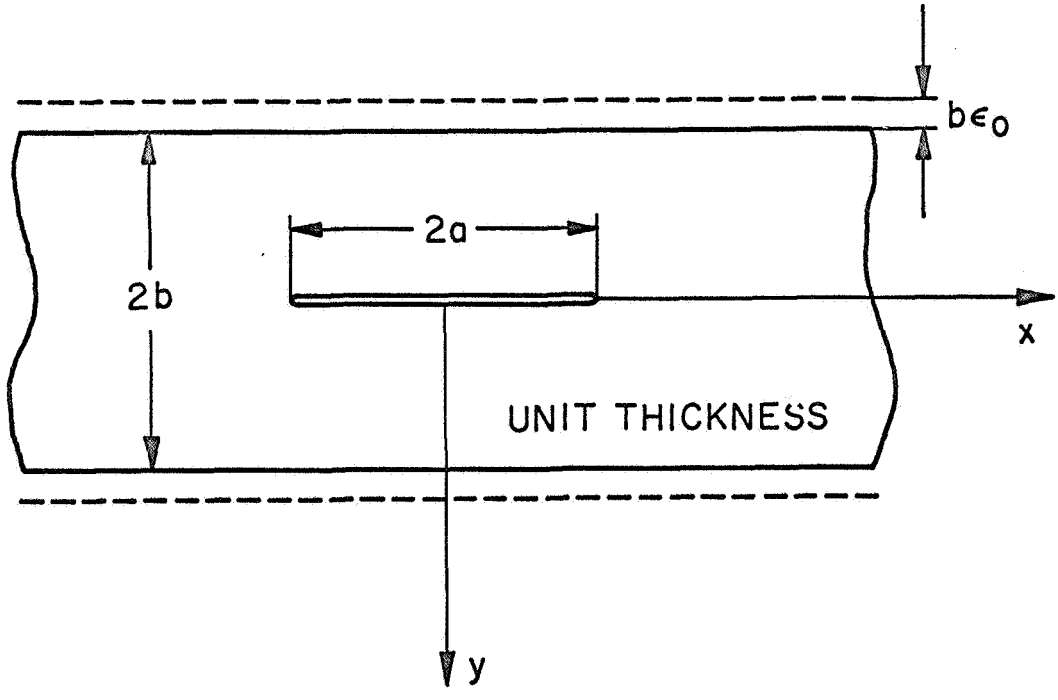

FIG. 1 STRIP GEOMETRY

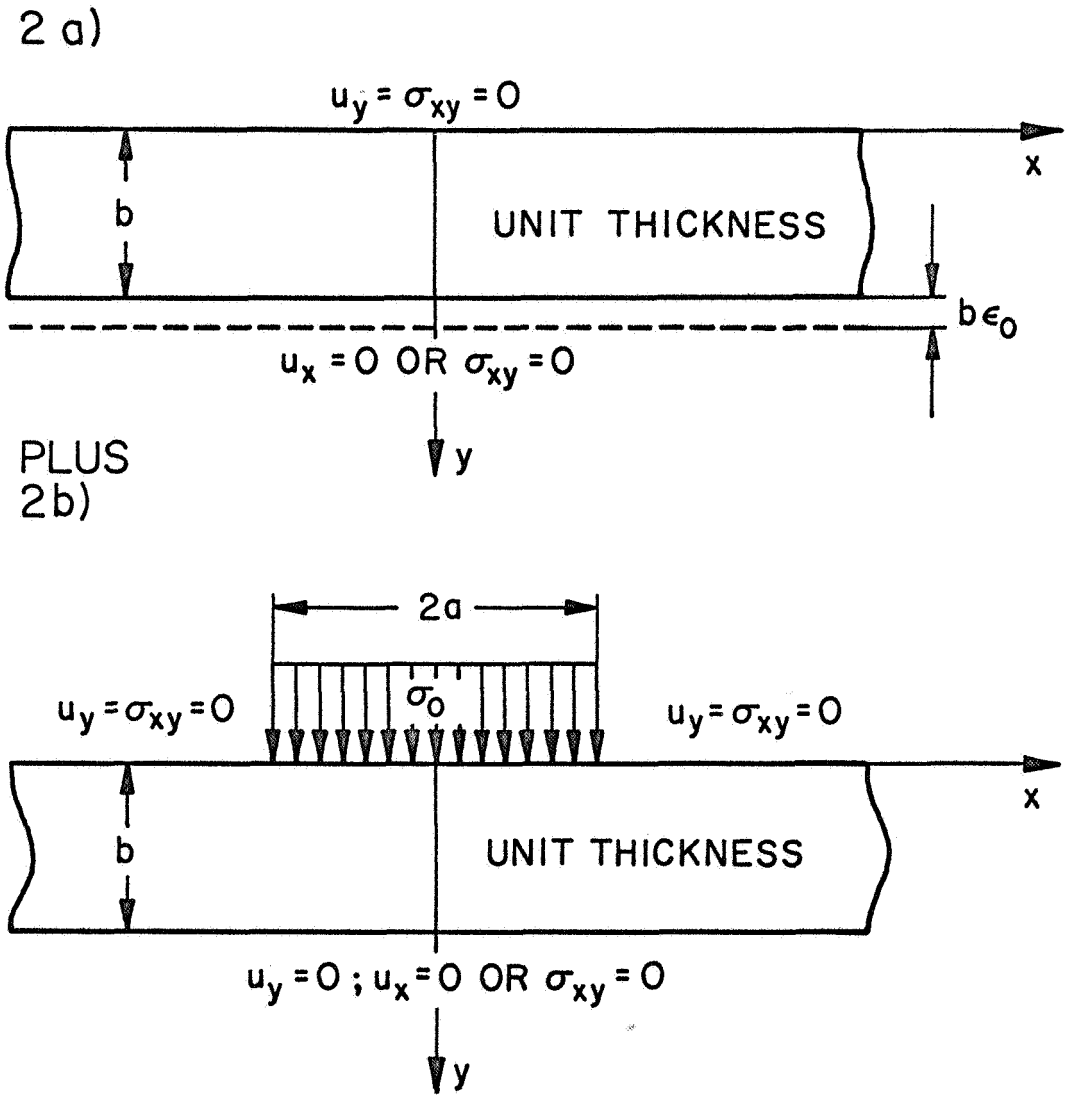

FIG. 2 EQUIVALENT PROBLEM

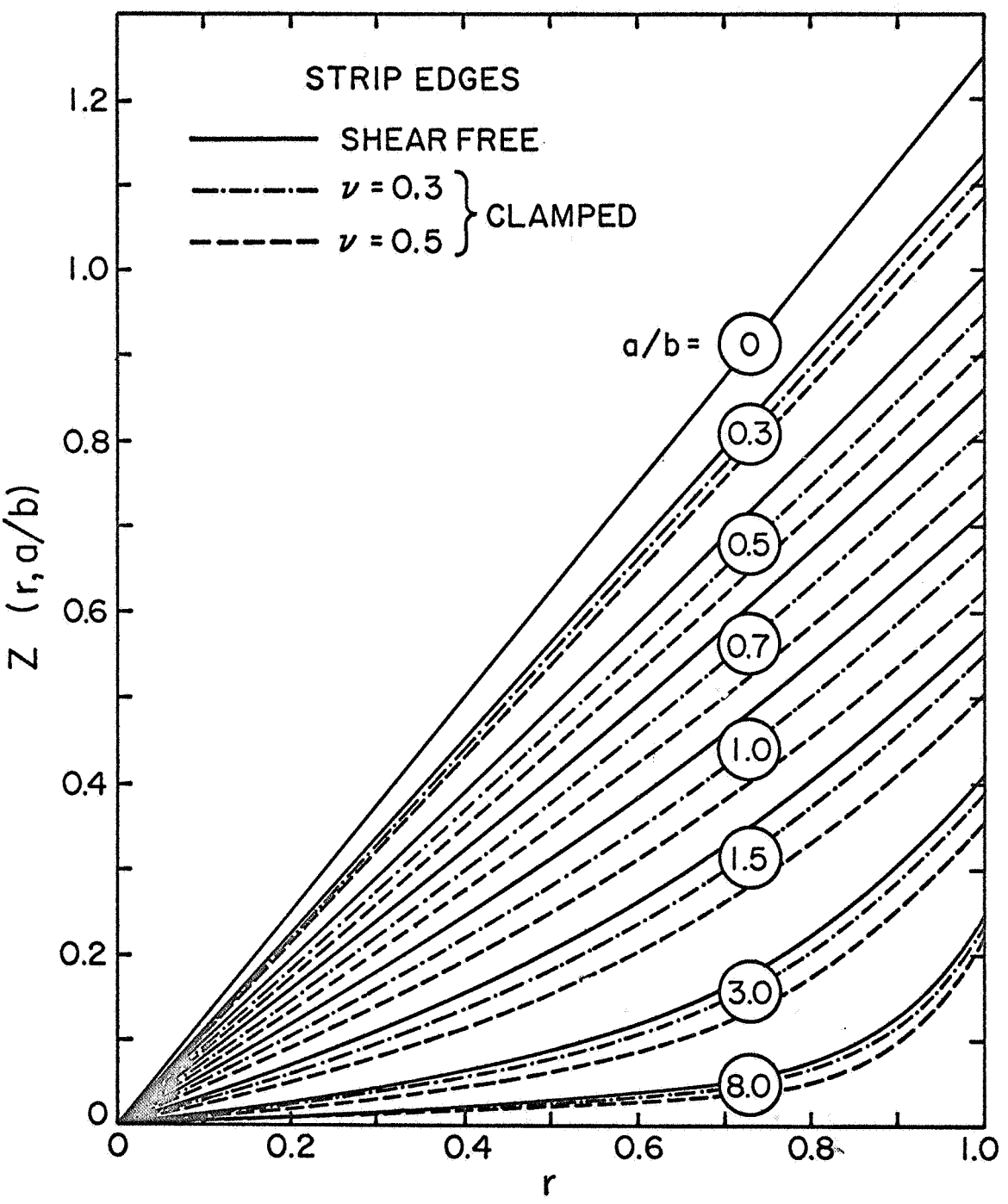

FIG. 3 SOLUTION Z (r, a/b) OF THE INTEGRAL EQUATION

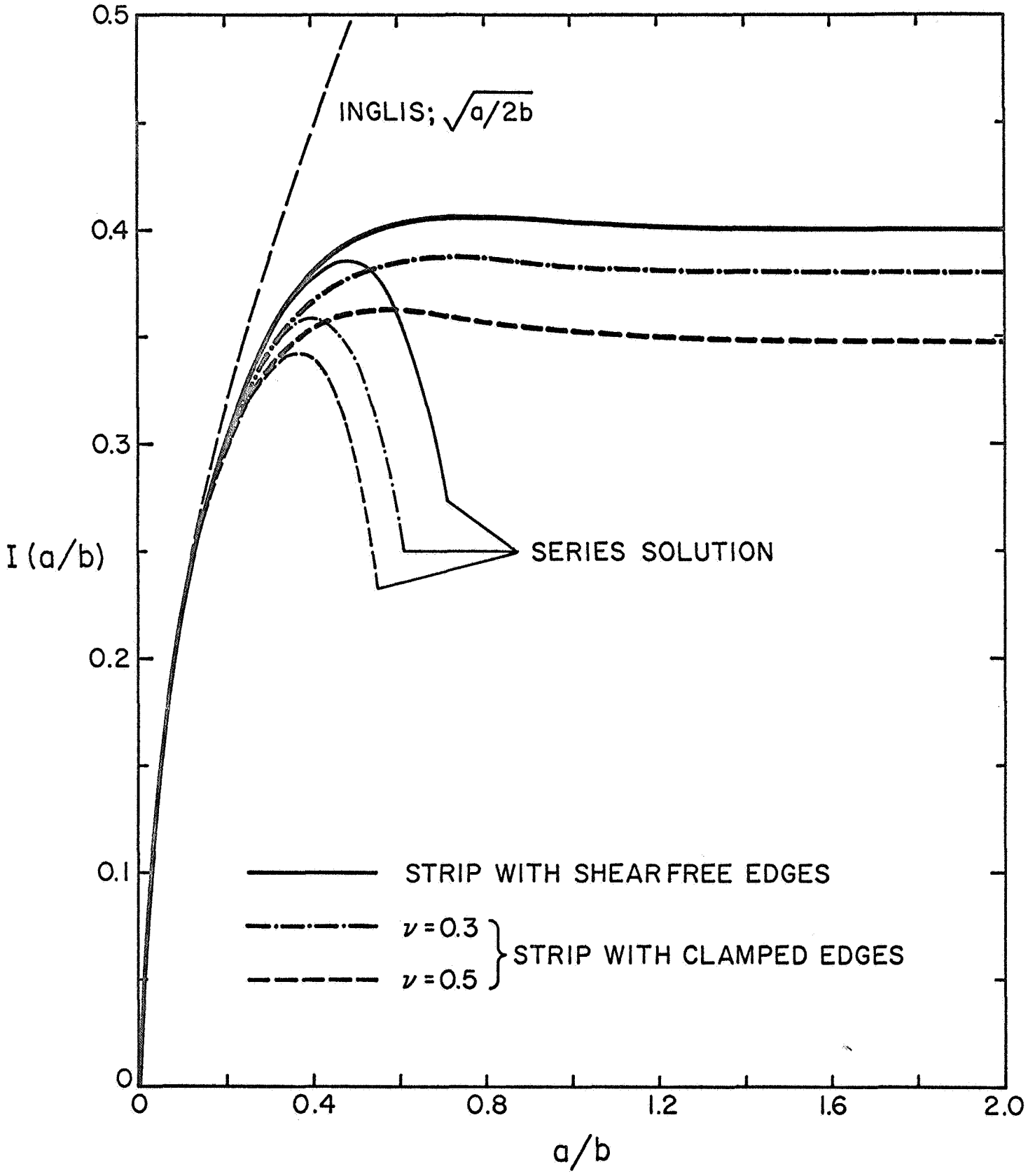

FIG. 4 STRESS INTENSITY FACTORS AS FUNCTIONS OF CRACK LENGTH

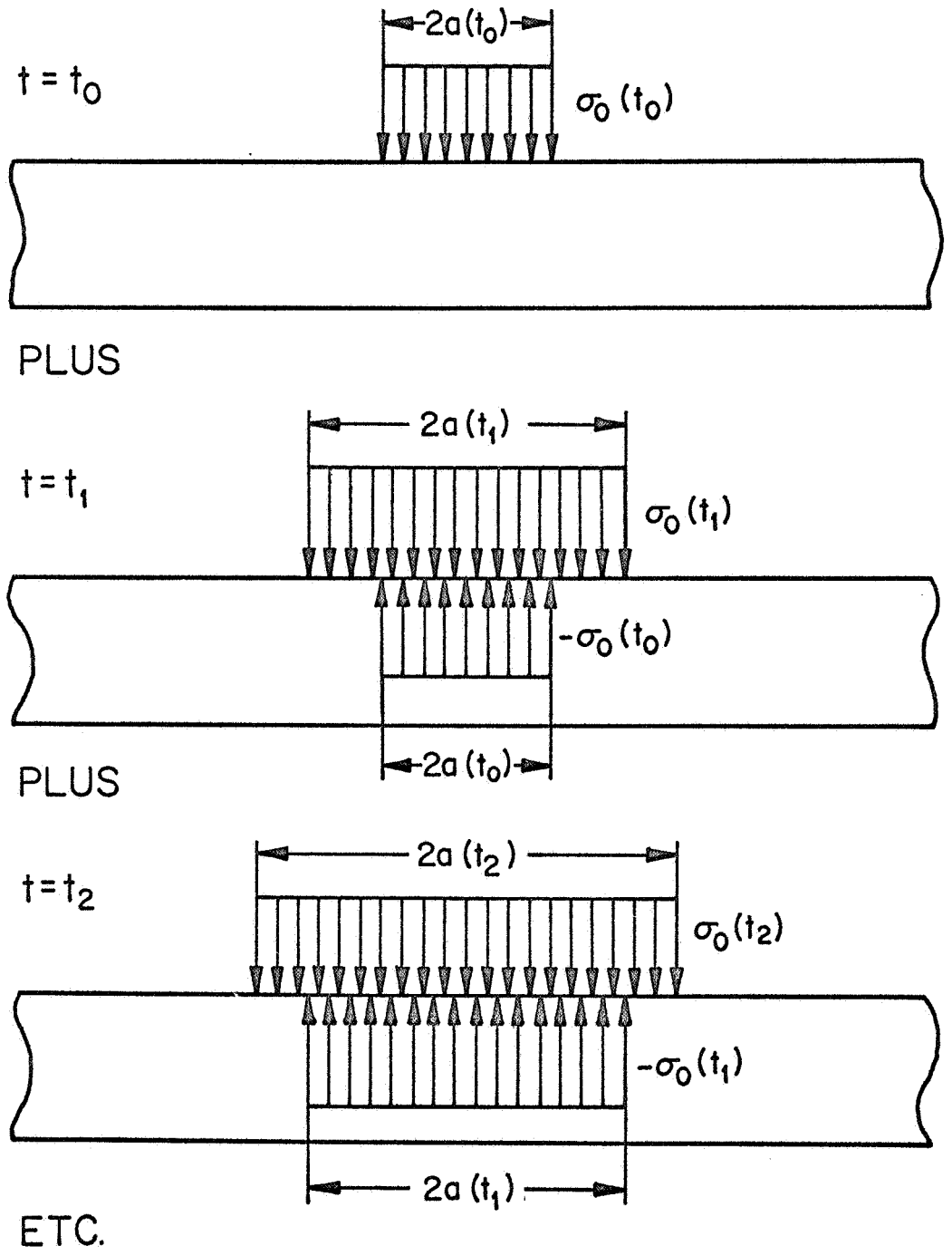

FIG. 5 SUPERPOSITION SCHEME