https://ntrs.nasa.gov/search.jsp?R=19690023263 2018-05-25T15:36:40+00:00Z

N69-32641 CR-86185

SD 68-869
Contract NAS12-603

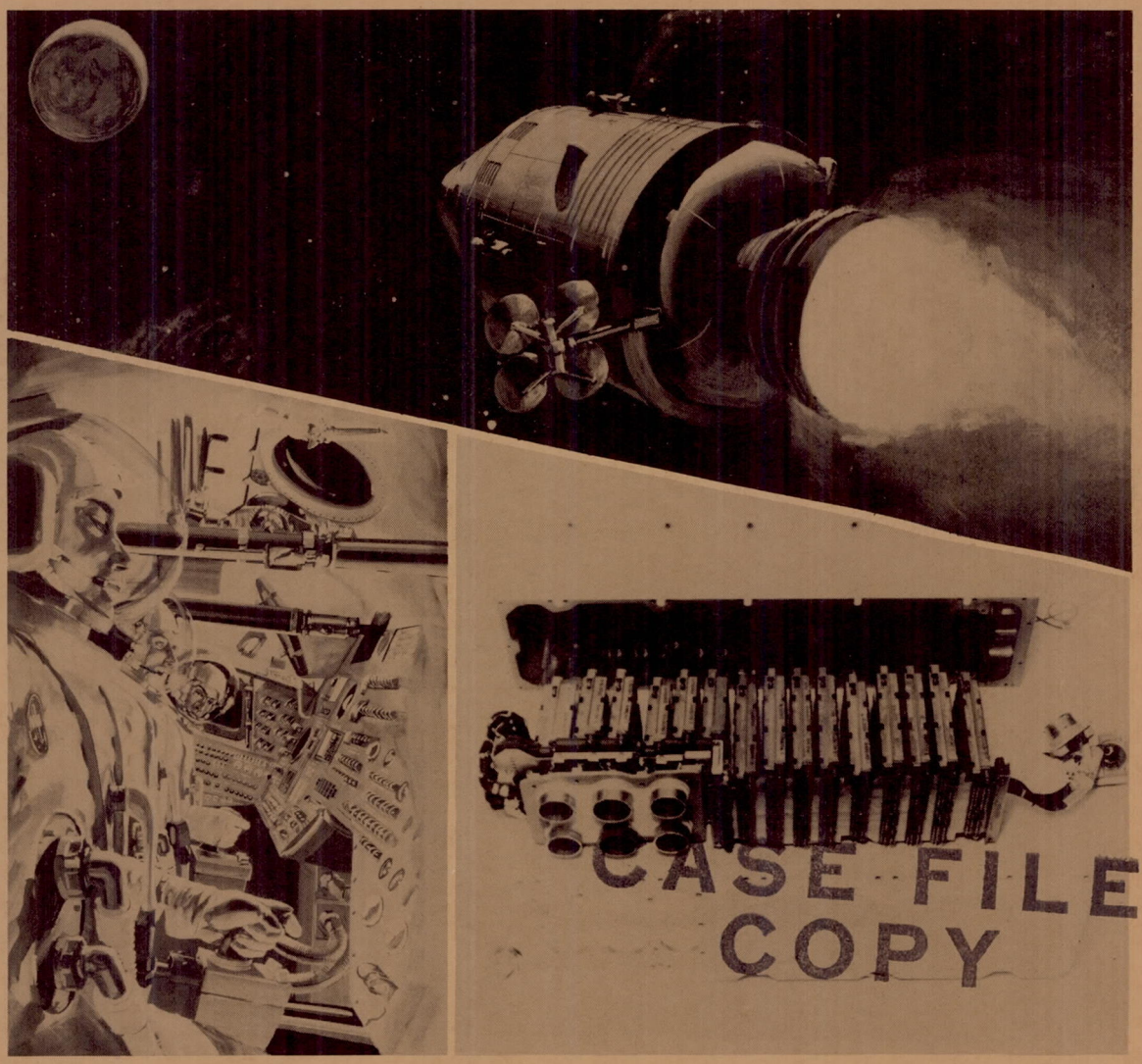

APOLLO COMMAND AND SERVICE MODULE STABILIZATION AND CONTROL SYSTEM DESIGN SURVEY

NASA/ERC

Design Criteria Program, Stability, Guidance, and Control

20 December 1968

PREPARED FOR

NATIONAL AERONAUTICS AND SPACE ADMINISTRATION
Electronics Research Center
Cambridge, Massachusetts

SPACE DIVISION OF NORTH AMERICAN ROCKWELL CORPORATION
12214 LAKEWOOD BOULEVARD • DOWNEY, CALIFORNIA 90241

"This document was prepared under the sponsorship of the National Aeronautics and Space Administration. Neither the United States Government nor any person acting on behalf of the United States Government assumes any liability resulting from the use of information contained in this document, or warrants that such use will be free from privately-owned rights."

Francis J. Carroll, Jr.
Curtis H. Spenny
Technical Monitors
NAS12-603
Electronics Research Center
575 Technology Square
Cambridge, Massachusetts 02139

Request for copies of this report should be referred to:

NASA Scientific and Technical Information Facility,
P. O. Box 33, College Park, Maryland 20740.

SD 68-869

APOLLO COMMAND AND SERVICE MODULE STABILIZATION AND CONTROL SYSTEM DESIGN SURVEY

20 December 1968

NASA/ERC DESIGN CRITERIA PROGRAM
STABILITY, GUIDANCE, AND CONTROL

Prepared for

National Aeronautics and Space Administration
Electronics Research Center
Cambridge, Massachusetts

Contract NAS12-603

Prepared by

SCS Design Survey Team

Approved by

F. B. Cauchon
Project Engineer
Contract NAS12-603

R. L. Peterson
Study Manager
Contract NAS12-603

SPACE DIVISION
NORTH AMERICAN ROCKWELL CORPORATION
12214 Lakewood Boulevard, Downey, California 90241

FOREWORD

This report is a design survey of the Apollo CSM stabilization and control system and is part of the NASA Design Criteria Program. The objective of the program is to provide a unification of design approaches for the development of space vehicles and their major components. These surveys are intended to document the design experience gained from specific NASA projects and will be used as an aid in identifying suitable topics for design criteria monographs.

This design survey was performed in accordance with the Statement of Work in NASA Contract NAS12-603, "Apollo Stability, Guidance, and Control Design Survey," for the NASA Electronics Research Center Design Criteria Office.

The material for this study was gathered, prepared, and documented under the direction of the Program Manager, R. L. Peterson, and the Project Engineer, F. B. Cauchon. Major sections of the report are the results of the efforts of Messrs. M. F. Madden, E. J. Knobbe, and M. W. Kishi. H. K. Watson wrote other sections of the report as well as aiding in the understanding of the system and critical editing of the report. Personnel now connected with the Apollo CSM/SCS, such as Messrs, W. B. Fouts, R. G. Epple, B. W. Johnston, and M. J. Stiles provided much needed assistance.

The contractor's designation for this report is SD 68-869.

CONTENTS

Section		Page
1.0	INTRODUCTION	1
	Report Organization	1
	Recommendations	2
2.0	TOTAL SYSTEM DESIGN SURVEY	5
	System Description	5
	Design Requirements	9
	Problems and Changes	12
	Conclusions	20
3.0	ATTITUDE REFERENCE SUBSYSTEM	23
	Subsystem Description	23
	Design Requirements	25
	Problems and Changes	33
	Conclusions	35
4.0	THRUST VECTOR CONTROL SUBSYSTEM	39
	Subsystem Description	39
	Design Requirements	42
	Problems and Changes	47
	Conclusions	52
5.0	ATTITUDE CONTROL SUBSYSTEM	53
	Subsystem Description	53
	Design Requirements	58
	Problems and Changes	64
	Conclusions	70
6.0	ENTRY CONTROL SUBSYSTEM	71
	Subsystem Description	71
	Design Requirements	72
	Problems and Changes	77
	Conclusions	79
7.0	CONTROLS AND DISPLAYS SUBSYSTEM	81
	Subsystem Description	81
	Design Requirements	90

Section		Page
	Problems and Changes	94
	Conclusions	101
8.0	HARDWARE DESIGN PHILOSOPHY	103
	General	104
	Detail Design Requirements	108
	Configuration Control Requirements	119
	Quality Assurance Requirements	120
	Problems	130
	Conclusions	131
9.0	TECHNICAL CONTENT SUMMARY	133
	BIBLIOGRAPHY	135
	APPENDIXES	
	A. SCS HAND CONTROL DESIGN REQUIREMENTS	137
	B. ABBREVIATIONS AND ACRONYMS	147
	C. NEW TECHNOLOGY	151

ILLUSTRATIONS

Figure		Page
2-1	SCS Functional Diagram	7
2-2	Apollo Block II Stabilization and Control System	8
2-3	SCS Evolution	19
3-1	Three Single-DOF Attitude Gyro ARS (Block I/AGCU)	29
3-2	Two 2-DOF Attitude Gyro ARS	29
3-3	Inertial Platform ARS (Three or Four Gimbals)	35
3-4	Three Single-DOF Attitude Gyro ARS (Block II/GDC)	35
4-1	Thrust Vector Control Functional Diagram	40
4-2	SPS Engine Mount	43
4-3	SPS Gimbal Mount	43
5-1	ACS Functional Diagram	55
5-2	Thruster Orientation	56
5-3	Arc Suppression Mechanization	69
6-1	Entry Control Functional Diagram	73
7-1	Displays Functional Diagram	82
7-2	Controls Functional Diagram	83
7-3	Translation Control	84
7-4	Rotation Control	85
7-5	Attitude Set Control Panel	87
7-6	Flight Director Attitude Indicator	88
7-7	Gimbal Position/Fuel Pressure Indicator	89
7-8	Evolution of SCS Controls and Displays	97
7-9	Main Control Panel	99
8-1	Block II Contract End Items	105
8-2	SCS Interfaces	113
8-3	Electronic Control Assembly	116
8-4	Exposed Electronic Assembly	117

TABLES

Table		Page
1-1	Relay Failures	16
3-1	Stabilization and Control System Performance Requirements	27
3-2	Subsystem Tradeoff Evaluation (No Redundancy)	30
3-3	Subsystem Tradeoff Tabulation (Reliability Equal to or Greater Than 0.999276 Through In-Flight Repair)	30
3-4	ARS Requirements Changes	36
3-5	Attitude Reference System Tradeoff (Block II)	37
4-1	Criteria for Linear Small-Signal Stability	46
4-2	Block II TVC Body Bending Data	49
7-1	FDAI Characteristics	92
8-1	Hardware Physical Characteristics	106
8-2	Environments	111

1.0 INTRODUCTION

This report presents a design survey summary of the Apollo Block II stabilization and control system (SCS).* The report is divided into eight basic areas to provide, first, an overview of the complete system and its integral subsystems, their functions, mechanization, and any interesting or unique features they may embody together with historical development where it seems appropriate. Secondly, the report describes the design requirements which were initially specified or which evolved with time and the various design tradeoffs that were considered in finally arriving at a design baseline. Thirdly, each of the eight areas are explored for the more significant problems which arose (those beyond the normal development type) and what changes were effected to solve those problems. Finally, conclusions are presented for each area which represents a synthesis of the experience obtained during the course of this program.

The material presented herein was obtained from researching approximately 300 documents and in interviews with approximately 25 persons intimately connected with the SCS program.

In researching the material for this report, it was difficult at times to assess if a problem was one that indicated a design deficiency or something that should be expected in the normal development and evaluation of any complex system. Furthermore, the unusual length of the Apollo program, seven years, tends to obscure the development problems and in some cases the design problems.

To date, the SCS has operated successfully on all flights, which include four unmanned Block I vehicles and one manned Block II vehicle. The Apollo 7 flight is so recent that no specific SCS performance data are available for this report. Much of the success of this system can be attributed to conservative design techniques, use of state-of-the-art components, extensive development, qualification, and acceptance testing, as well as sophisticated hardware-in-the-loop simulation programs. The SCS is manufactured by Honeywell, Inc., under contract to the Space Division of North American Rockwell Corporation.

REPORT ORGANIZATION

Each major section of this report corresponds to the major subsystems of the SCS. There are two additional sections that discuss the system as a whole. Section 2.0 discusses the total system while Section 8.0 discusses

*See Appendix B for abbreviations and acronyms.

the hardware design philosophy. Sections 3.0 through 7.0 discuss the operation of the subsystems and their requirements, and evaluate the major changes, tradeoffs, and design problems encountered. Finally, these sections conclude with a discussion of hindsight or recommendations.

RECOMMENDATIONS

Two sets of recommendations were reached based on the results of this study: (1) future program recommendations, and (2) additional study recommendations. For future programs it is recommended that:

1. Firm baseline requirements be established before the start of the hardware design process. Although this seems obvious, the Apollo program was not conducted in this fashion.

2. Multiple source procurement be used for advanced design approaches. Generally, state-of-the-art design approaches should be adhered to. However, if this is not possible, alternate sources of procurement should be examined to prevent development problems of a supplier from slowing the design of the total system.

3. Firm specifications be provided for crew personal preference items.

4. The use of rigorous tolerance analyses to establish design and test limits be utilized. Although most programs use some form of tolerance analysis, the design experience for Spacecraft 101 (Apollo 7) indicates that this method should be of a rigorous nature. The use of mathematical convolution in combining probability density functions provides this rigor. In support of this activity, manufacturers should provide component part performance characteristics probability density functions.

Additional studies are recommended in the following areas:

1. Development of a failure analysis methodology to assist in the identification of single-point failures. The present method is the application of many engineers to search diagrams for problems, and is not altogether successful for complex systems.

2. Development of an accurate low-g propellant slosh model. The present model has produced some physically unreasonable results in simulations, and predictions based upon it have not been confirmed by any of the previous Apollo flights.

3. Reexamination of the thrust vector control (TVC) design concept so it can be made less vehicle-parameter sensitive with the same performance. Furthermore, a better way needs to be found to determine the vehicle parameters, such as body bending.

4. Establishment of criteria and methods to obtain extended hardware duration reliability. The long checkout times for complex space vehicles, together with the extended duration of some missions, put a premium on long-life operation of equipment.

2.0 TOTAL SYSTEM DESIGN SURVEY

This section describes the design and evolution of the total SCS system. Details of each subsystem are described in separate sections. The discussion is primarily performance-oriented, and subjects such as reliability, configuration control, quality assurance, etc., are treated in a separate section.

The section reviews the purpose and requirements for the total system, proceeds to the evolutionary development of the system, and includes the major problems and changes. The problems discussed are the humidity requirement change, the Block I electrical connectors, single-point failures and relay failures. The major change was a redesign in June 1964; the original SCS prior to that time was termed Block I and the redesigned SCS subsequent to June 1964 was termed Block II.

SYSTEM DESCRIPTION

The function, operation, and design features of the SCS as a total system are described herein. Individual sections of the report will elaborate on the system characteristics in more detail. The SCS is an analog flight control system whose primary purpose is to back up the functions of the primary flight control mode. The SCS also provides interfacing equipment between the command module (CM) computer, astronauts, and the spacecraft thrusters.

Functions

The SCS provides the Apollo spacecraft with an analog backup flight control capability. The primary system is provided by the primary guidance, navigation, and control system (PGNCS), which is a digital system. The SCS provides the electrical interface between command signals and the service propulsion system (SPS) and the reaction jet control system (RCS) thruster operations and visual displays of vehicle flight-control parameters. In the manual control modes of operation, the SCS also provides a direct electrical interface between manual input commands and the PGNCS command module computer. As a backup system, the SCS performs all of the flight-control functions of the PGNCS except automatic attitude maneuvers.

The SCS senses the three vehicle body rates, which are utilized for control and display, generates and uses the three vehicle body attitudes,

visually displays these parameters, generates and displays the three attitude errors, provides direct control and display of SPS pitch and yaw gimbal positions, provides setting and display of desired vehicle angular orientations, generates and uses vehicle translation and rotation commands, and, when used as the backup flight control system, processes (i.e., summing, shaping, gains, etc.) all signals necessary to effect complete vehicle control.

Mechanization

The stabilization and control system consists of three major elements (Figure 2-1)—the attitude reference subsystem, the flight control electronics, and the controls and displays. The backup flight control inertial reference capability is provided by six body-mounted attitude gyros (BMAG). Three are used for attitude information and three are used in a rate mode for sensing spacecraft rotational rate. Electronics are provided through the gyro display coupler, to convert the BMAG information from body coordinates to Euler angles for display to the crew. Each flight control mode, i.e., thrust vector control, attitude, and entry control, has an automatic as well as a manual mode of operation. The input signals to the electronics for these flight-control modes are the attitude reference and the rotational hand controller signals. Motion of the CSM is accomplished under command of the flight control electronics through the use of the service module (SM) 20,000-pound thrust main engine for thrust vector control, through sixteen 100-pound SM reaction jets for attitude control, and through twelve 100-pound CM reaction jets during the entry control phase.

Display of the vehicle attitude rate and attitude error is provided by a pair of flight director attitude indicators (FDAI's). Two hand controllers are provided to command vehicle rotation and one hand controller for translation. Control and display of the SPS engine gimbals are also provided. Figure 2-2 is a photograph showing the electronic equipment used for the SCS.

Design Features

The SCS has the following design features that are discussed in more detail later in the report:

Euler angle generation - The use of attitude changes, rather than rate data, to generate Euler angles by the attitude gyro coupler unit (AGCU), Block I, and the use of rate data to generate Euler angles by the gyro display coupler (GDC), Block II.

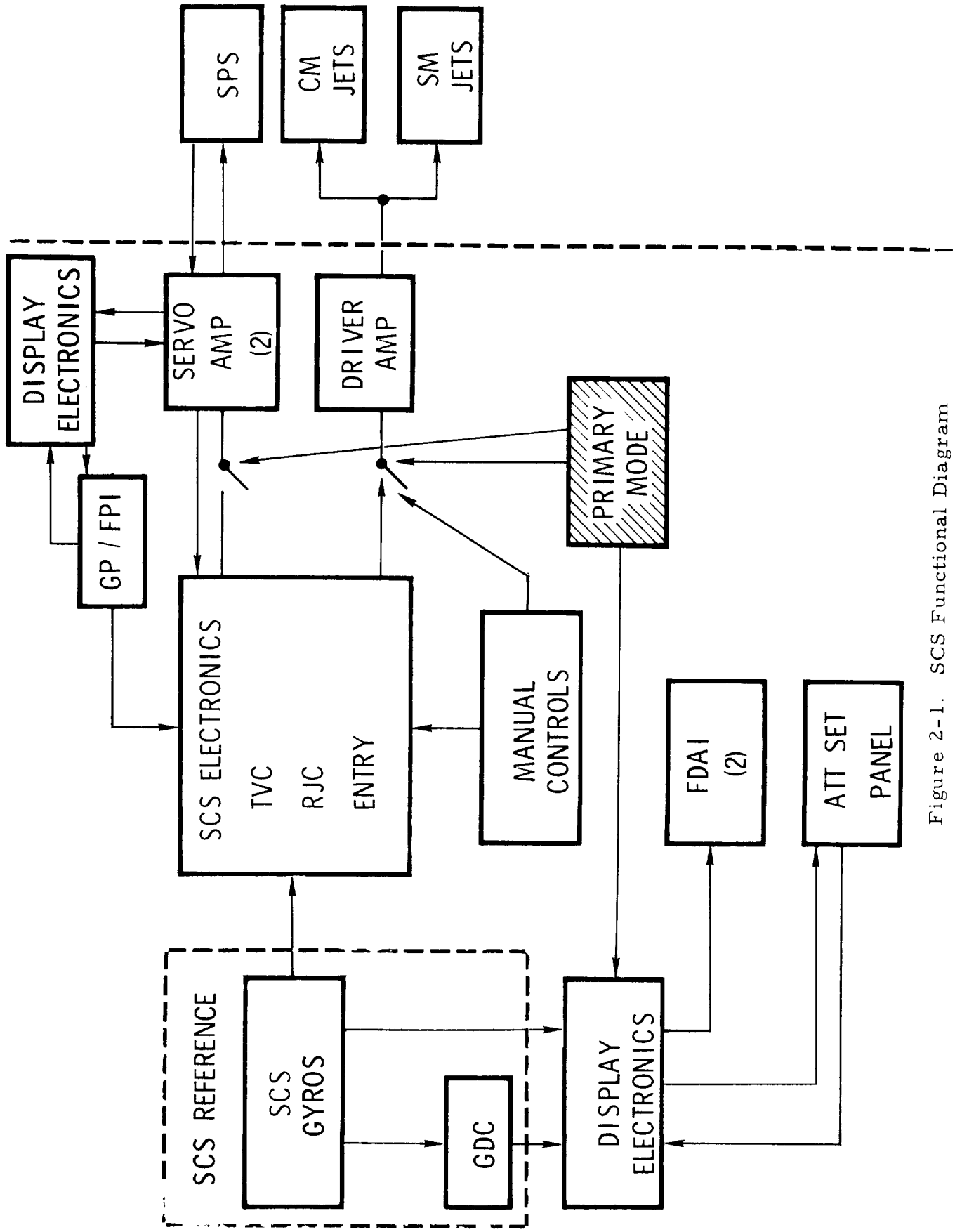

Figure 2-1. SCS Functional Diagram

108RE14153

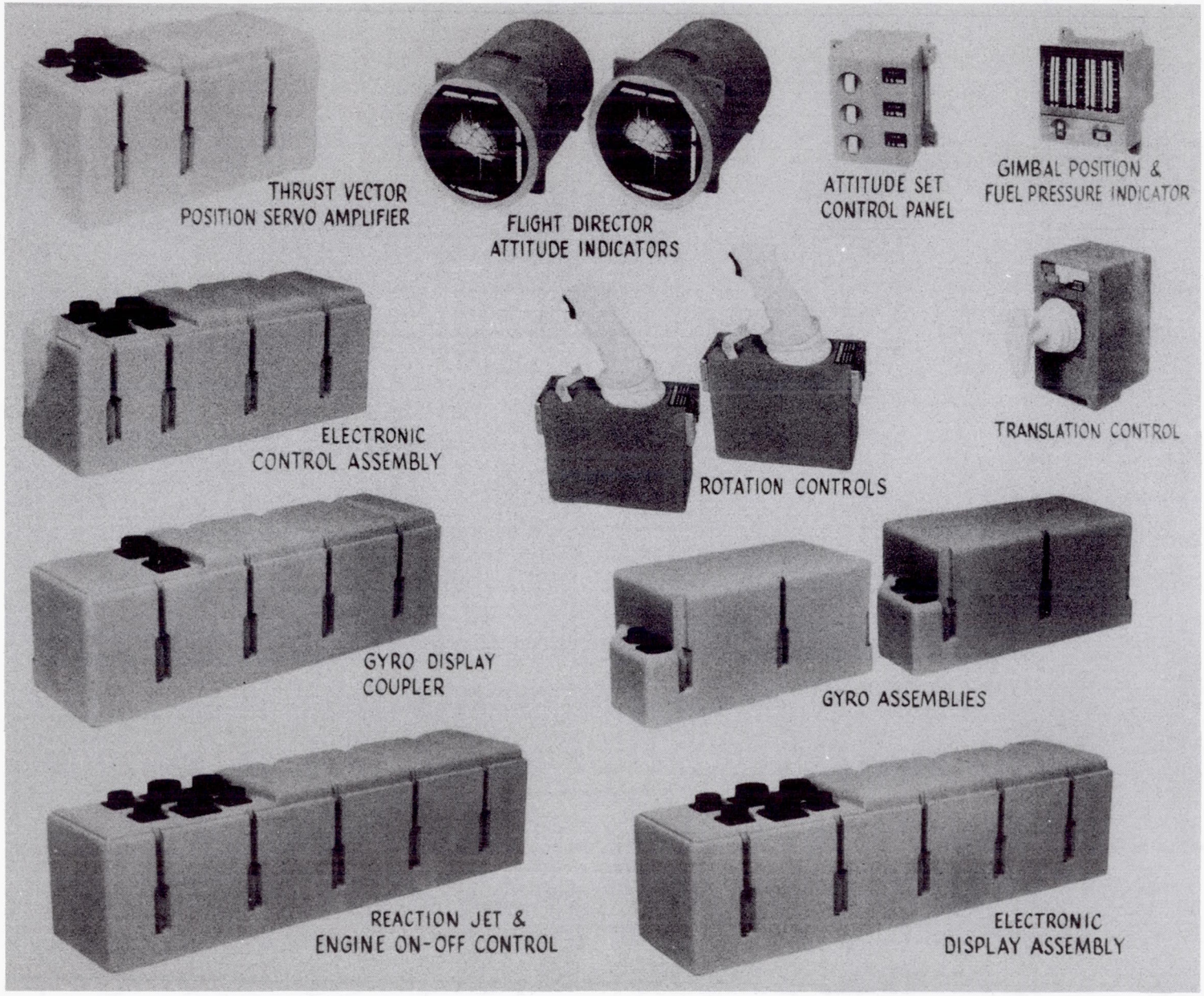

Figure 2-2. Apollo Block II Stabilization and Control System

Pseudo-rate feedback - A passive network that provides for the control of attitude limit cycles well below the rate sensor threshold and yet within the range of the reaction jets minimum impulse capability.

Magnetic particle clutch actuator - The typical space actuator is hydraulic whereas the Apollo main engine is actuated through a magnetic clutch and an electric motor, thus doing away with working fluids in a vacuum environment.

Manual thrust vector control (MTVC) - Early in the program it was not considered feasible to have manned control of the SPS because of the high acceleration levels possible with the SPS. However, extensive simulations showed that the astronaut can effectively control this system and MTVC is now the primary method of main engine flight control failure takeover.

Multiple function display (GP/FPI) - The use of a display to show two different quantities at different times in the mission to save control panel space.

Tolerance analysis program - The use of mathematically rigorous summations of piece part probability density functions through mathematical convolution techniques to determine design test limits, thereby providing additional confidence in the system flight operation.

DESIGN REQUIREMENTS

Requirements

The mission performance design requirements that the system must satisfy are presented below:

Mission Phase	Requirement
Abort	Safe trajectory and orientation for reentry.
Transearth flight	Total midcourse corrections equal to or less than 300 ft/sec in three or less burns; not more than three RCS corrections whose total is less than 15 ft/sec.

Mission Phase	Requirement
Transearth injection	Delta V accuracy of one degree rms.
Entry	No range control requirement.

Block I Design Philosophy - In-Flight Maintenance

From early in the program until the major Block II change in June 1964, the SCS was the primary method of flight control. The initial Apollo proposal indicated the control system would also encompass a lunar-landing capability. This, however, was eliminated when the lunar orbital rendezvous concept was adopted by the NASA. As the primary method of flight control, the system had to meet a high-reliability figure. This could only be achieved through the use of in-flight maintenance (IFM). Despite the best efforts of reliability and design engineers, the equipment mean time between failures (MTBF) was of the same order of magnitude as the mission time. Hence, the most feasible solution to the problem of maintaining high system reliability was to provide standby redundancy in the form of onboard spares.

The Apollo proposal indicated that the basic stabilization and control system would be designed on the basis of having the complete functional system backed up with standby redundancy in the form of module level spares. The crew, with the aid of simple checkout equipment, would be able to detect malfunctions at the black box or module level and make the necessary replacement. The mean time to repair (estimated at 30 minutes) was thought not to be significant during the midcourse trajectory because attitude disturbing torques are extremely small and correction could be made after the system was restored to operation.

The control system reliability allocation for a 14-day mission was 0.995. The ground rules initially established for the system design were:

1. Use the astronaut whenever possible to obtain increased reliability through system simplification.

2. Include in-flight test system self-check wherever possible.

3. Design reliability into equipment by the use of high-reliability parts, conservative part derating, circuit parameter and stress analyses, and reliability prediction and control methods.

A variation in astronaut participation was effected because it was anticipated that the crew members would make human errors. Ground rule No. 1 was changed to have equipment designed to assist the crew members' activities, which, in effect, would minimize the incidence of human error. It was felt that there should be utilization of their capability to interpret and evaluate indicators, exercise judgment, and make decisions; however, manual or automatic troubleshooting should be used to help trace the cause of the malfunction to a particular module or component. Near the end of the IFM program, these ground rules were added:

1. Fault isolation to the level of three replaceable subassemblies with a semi-automatic test mode in the in-flight test system.

2. Fault isolation to a level of one replaceable subassembly with manual test

3. Maximum use made of SCS displays and controls for fault isolation

4. Maintenance possible in or out of the pressure suit

5. Mean time to repair equal to 20 minutes in shirt sleeves.

In early 1963 the required weight of spares to achieve the mission reliability of 0.995 was 70 pounds. With no spares the predicted reliability was 0.605. At the June 1964 design review, the required spares weight had decreased to 44.4 pounds and the no-spare reliability was up to 0.825.

At the time the Block II concept was being defined, in June 1964, the in-flight maintenance requirement was deleted. Since the Block I earth orbital reliability requirement is considerably less than that for the Block II lunar trip, additional redundant circuits were not added to the Block I vehicles in lieu of on-board spares. The Block II system was redesigned to include redundant control paths.

In-flight maintenance was deleted for two reasons:

1. Practicality: although it was technically feasible for the astronaut to detect and replace the failed module, it was not an easy task. For example, in the Control System laboratory it was not unusual for a trained technician to take hours to locate and change a defective element. The increased humidity requirement fixes, furthermore, made the installation and removal of the boxes more difficult.

2. Block II: the concept of Block II that made the SCS the backup system, and repackaging the electronics to include redundant circuits, eliminated the need for in-flight maintenance.

PROBLEMS AND CHANGES

Problems

There were four major problems encountered in the development of the SCS that affected the system as a whole. These were humidity requirements, the Block I electrical connectors, single-point failures, and relay failures. These problems are discussed in the following paragraphs.

Humidity

In the summer of 1963 the Mercury flight of MA-9 experienced electrical difficulties. These failures were traced to electrical shorts caused by condensation resulting from an unexpectedly high humidity environment of 40 to 70 percent relative humidity, and a temperature of 75 plus or minus 5 degrees F. On Apollo, these parameters are maintained by the environmental control and life support system (ECLSS).

The ECLSS control is effectively limited to the atmosphere in the cabin interior, i.e., in front of equipment panels. The atmosphere behind the panels, in corners, or in protected pockets are beyond the direct control of the ECLSS. Water is removed through the suit circuit or with a vacuum cleaner. If the temperature falls below the dew point (about 60 degrees F), condensation will occur. With low surface temperatures and the absence of warm, moving air, condensation could be expected behind panels and especially near cold spots. Areas near the umbilical, windows in the forward equipment bay, and structural connections to cold walls were particularly sensitive to spacecraft orientation with regard to condensation.

Condensation could be expected during approximately 40 percent of all possible spacecraft orientations. After 4 to 5 hours of such orientation, the cabin air may fall to 60 degrees F. Analysis indicated that condensed moisture could be expected in and around the equipment located in the pressurized section of the command module even with the ECLSS operating properly.

Based on these factors, it was decided to change the spacecraft equipment relative humidity requirements to 100 percent during flight operation. The SCS equipment for Block I was subsequently modified to withstand this new requirement. The ground rules for the change were as follows:

1. Existing in-flight maintenance requirements will be retained in any redesign.

2. Existing package envelope dimensions will be retained in any redesign.

The nature of the changes took the form of backpotting and adding rubber seals to the electrical connectors. Although this technically allowed the in-flight maintenance concept to remain, the practicalities of changing the spares was made very difficult. The Block I system never did fail humidity testing during qualification testing or actual flight. The change in humidity requirements was, however, a major factor in the Block II design concept.

Block I Connectors

The SCS equipment boxes for Block I were electrically interconnected through small multipin connectors. The female half was attached to the spacecraft and the male half was on the equipment enclosure. Mating difficulty was encountered because of the mass and length of the equipment enclosure, and the high pin density of the connector. It was extremely difficult to mate the connector without breaking or bending pins. Other problems experienced included connector body breakage during insertion and removal of the enclosure, connector damage during crimping and pin removal, and retention spring breakage and pin burrs.

Because of the numerous problems experienced with the connectors, an alternate source of procurement was considered. However, the part was of an advanced design, and because of the considerable investment in the original vendor, alternate source procurement was considered impractical.

The high breakage and failure rate of the connector led to an unexpected usage of the available supply. This eventually resulted in prime contractor schedule slippage as the supply ran out and acceleration of resupply was not possible. The resupply problem was caused by a vendor who manufactured the spring retention clip and who was unable to meet the resupply delivery needs.

The connector problem for Block I was not solved by a design breakthrough or the purchase of a different connector. Rather, there was continuous development until the end of the Block I program. The redesign and repackaging of the SCS brought about by the Block II decision included a change to standard connectors. No problems have been reported in this area on the Block II system.

Single-Point Failures

The search for, discovery, and elimination of single-point failures has been a long and tedious job. The process of finding single-point failures consists primarily of having designers continually search the wiring diagram for trouble areas. Examples of single-point failures found and corrected to date are:

1. SCS logic bus: a single short to ground would fail power to all G&C mode and function switches.

2. TVC servo power switch: a failure in the single switch used for both servo amps would fail TVC completely.

3. Entry roll display: a single power bus failure would fail all three methods of roll display.

4. SCS drivers: a single SCS failure would cause the primary mode to disable the reaction jet drivers.

5. Rotation control for MTVC: a single power failure would leave rotational control inoperative during MTVC operation.

The identification of single-point failures is difficult and time consuming. A given subsystem generally consists of two modes, i.e., its nominal mode and its backup or redundant mode. The normal and redundant modes are generally similar, but the subsystem is at least twice as complex as it would be if it did not need the redundant mode. A failure, of course, can occur in either mode. Generally, the failure conditions and ensuing states are known and understood by the designers. Special failure tests are conducted to ensure that a single failure, and sometimes a multiple failure, does not make a redundant system inoperative. Although this level of failure analysis is tedious, it is generally successful.

The level of difficulty for single-point failure analysis increases substantially when several subsystems must be combined to form a total integrated system. The permutations of the elements in the problem and the types of failures increase considerably. Consideration must now be given to power failure, switch failure, and primary mode failures. Although these total system effects should have been analyzed at the time of specification of the subsystem so that each subsystem could be designed in terms of the whole, this is seldom done because of time and schedule constraints as well as a lack of detailed understanding of the total concept. The result is that after the hardware has been committed for manufacture, many hours are spent over drawings to see if what is being built will indeed have the required redundancy.

The failure analysis at this point generally suffers from an eroding of ground rules. Not uncommonly, the ground rules are changed so that the failed states of the total system increase again. For example, it was an original ground rule that switches would not short to ground. Experience with the switches later in the program caused this ground rule to be deleted. As a result, a whole new class of failure possibilities was introduced.

The complexity of modern space systems, together with the stress on high reliability, puts a premium on fail-safe design and minimization of single-point failures. Unfortunately, the present state of the design process does not appear capable of handling these requirements. Thus, it is highly desirable that some methodology be developed so that a system may be analyzed for its possible failure modes quickly and thoroughly. Further, the designers themselves should be made more fully conscious of failure modes and the importance of system reliability.

Relay Failures

The Filtors, Inc. Golden-G relay was selected by the SCS subcontractor for use in the Apollo SCS early in the Block I program. It was used throughout Block I and subsequently throughout Block II. This choice was based on several factors including performance capability, performance history, size and weight, and the quality assurance and reliability procedures and practices of the vendor. Few problems were initially encountered with the Golden-G relays during the Block I program. Each problem or relay failure (six in all) was analyzed or resolved on its individual merits and no pattern of failure modes evolved. One of the six Block I relay failures was caused by an internal solderball. Extensive research and testing was conducted to assure that this was not a serious problem in the existing Block I SCS. At that time a change from a soldered case-to-header-assembly to an electron-beam weld was made—no further solderball problems occurred.

The welded-header Golden-G relay was then used exclusively in the Block II SCS. There are 88 such double-pole, double-throw relays used in this system. The subcontractor procured 4091 relays for the total Apollo Program in two separate two-week periods (four lots) during January and July of 1966. Another 451 relays were retained by the vendor for Group B and C lot acceptance test purposes. From this overall total (4542) there were 27 failures. A limited number of Block II SCS relay malfunctions were encountered during module testing prior to November 1966. The number and type of malfunctions were not unusual or repetitive and their analysis and establishment of appropriate corrective action were performed with normal concern. However, in mid-November 1966, two relay failures occurred at black-box level testing, including one in qualification test. This triggered an extensive investigation by the subcontractor. The impact of those failures

at this time was considered to be of major concern to the Apollo Program since many of the electronic systems utilized these relays. Hence the SCS subcontractors' investigation was monitored very closely by both the contractor and NASA.

The two major distinctions relative to the failures were the types of failures that occurred and the test level where they occurred. These characteristics are summarized in Table 1-1.

Table 1-1. Relay Failure

Failure Mode or Test Level	Number of Failures		
	Block I	Block II	Total
Failure Mode			
1. Low normally open contact pressure	1	6	7
2. Relay hangup	2	2	4
3. Low-insulation resistance	0	5	5
4. Miscellaneous	3	8	11
Totals	6	21	27
Test Level			
1. Subassembly			
a. Relay part test	0	2	2
b. Module test	3	14	17
2. Device (pre-delivery)			
a. Production check	0	1	1
b. Acceptance	1	1	2
3. Device (post-delivery)			
a. Qualification	2	2	4
b. Field	0	0	0
c. Retrofit cycle	0	1	1
Totals	6	21	27

The reliability considerations on the SCS may be summarized as follows:

1. The relay failure rate objective established early in the Apollo SCS Program was 0.1 percent/1000 hours.

2. Based on four relay hangup failures in 860,000 device level relay hours on the Block II SCS, the relay best-estimate failure rate is 0.47 percent/1000 hours.

3. The Block II SCS reliability requirements (as established in the contractor procurement specification) is specified for each of the individual devices. These device-level failure rates total 128.7 percent/1000 hours.

4. The most recent (May 1966) rigorous Block II failure-rate predictions for the total SCS was 93.31 percent/1000 hours. This prediction assumed a relay failure rate of 0.1 percent/1000 hours.

5. A relay failure of 0.47 percent/1000 hours plus the addition of two redundant relays in the thrust vector servo control device increases the predicted Block II SCS failure rate to 126.81 percent/1000 hours, which is still within the 128.7 percent/1000-hour requirement.

Thus, added redundancy in the critical SCS relay circuits more than offsets the ratio of apparent-to-desired relay failure rates. With a predicted relay failure rate of 0.47 percent/1000 hours, one relay failure in every seven 14-day missions can be predicted; the probability of failure of both redundant relays in a critical SCS circuit is practically zero and would not significantly affect the mission reliability.

The relay investigation led to the following specific conclusions:

1. While the relay failure rate predictions based on current experience have not met the original estimated failure rate predictions, the SCS will meet the system reliability requirements.

2. Design of the SCS is such that no single relay failure will prevent mission success.

3. The relay represents the best proven state-of-the-art design and is fully acceptable for use in the Apollo Program.

4. Subcontractor in-house module and relay testing effectively screens out low, normally open contact force relays and low insulation resistance (wet) relays.

5. There appears to be no change in the test criteria at the device, module, or relay level from the present process which will reduce the probability of relay hangup.

6. Although there are not better relays available today, the isolated coil and contact design announced by the vendor should be inherently better and, when proven, should be considered for future manned space applications.

Changes

The Apollo contract was awarded in November of 1961 and the first unmanned flight was made in February 1966. Thus far, four unmanned flights and one manned flight have been attempted and each successfully completed. Significant highlights of the program are shown in Figure 2-3. The major redesign of the SCS occurred in June 1964 and affected the entire vehicle as well as the SCS. The four initial unmanned flights utilized the Block I design; the Apollo 7 manned flight used Block II. All remaining flights will use the Block II design. Manual TVC, which was first thought infeasible, was incorporated into Block I at the same time as the Block II redesign. TVC redesigns of the Block II system occurred several times because of changes in the vehicle body bending data.

The major change during the Apollo SCS program was the Block II implementation. The original Apollo program concept was that all flight vehicles would be the same as the ones that make the actual lunar-landing trips. By the spring of 1964, there were enough changes made or planned for the various systems that another block of vehicles was considered. In the summer of 1964, the program was divided into Block I and Block II vehicles. In general, only the Block II vehicles would have lunar-trip capability. The underlying concept of this change was that the PGNCS system should be considered the primary mode of operation, and the SCS the backup mode. That is, the SCS was to be used when the PGNCS is not used. Besides the backup system designation, other changes made to the SCS at that time were:

1. In-flight maintenance concept was deleted in favor of built-in redundancy.

2. The electronics were repackaged with hermetic-type seals for better humidity protection.

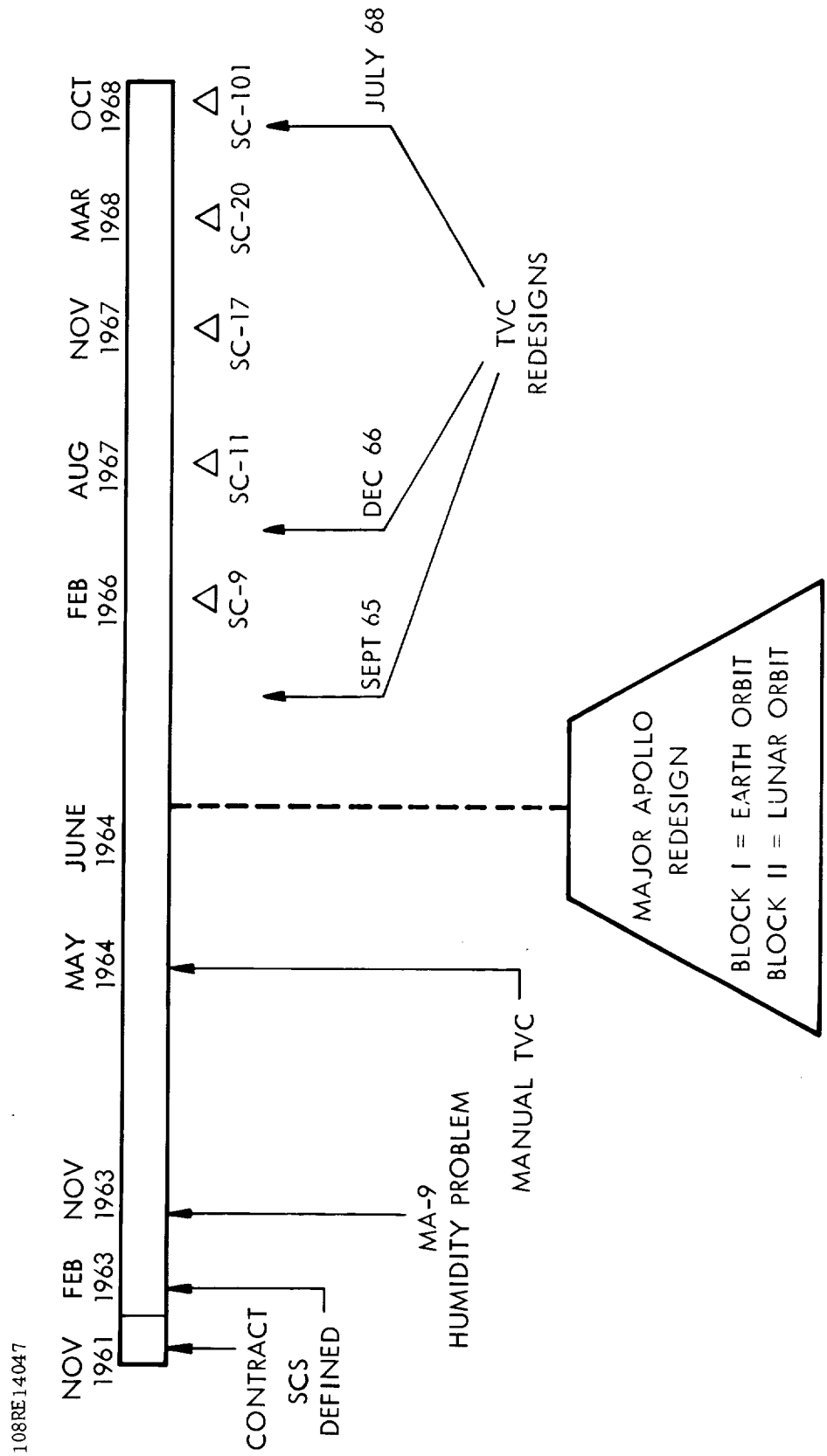

108RE14047

Figure 2-3. SCS Evolution

3. Microminiature integrated circuits (IC) were used. Approximately 15 percent of the electronics are IC's.

4. The mode switching concept was dropped in favor of functional switching.

5. Electroluminescent lighting replaced the integral lighting.

6. The rotation and translation hand controllers were redesigned.

7. Manual TVC was added.

8. Six body-mounted attitude gyros (BMAG's) were used in place of three BMAG's and three spring-restrained rate gyros.

9. A redundant FDAI was added.

There was an effort to remove the AGCU but this was decided to be unwise. Rather, the AGCU was replaced by the GDC which has similar functions but a higher rate capability. In addition to these changes, the following studies took place:

1. Changing the SCS from a dc to an ac system (the ac system proved to be less desirable).

2. Changing the SCS from an analog to a digital system. (This was more complex and costly than retaining the analog system.)

The Block II system is currently in flight operations. Small changes have been made to the system since the time of the original definition, but these were primarily of a developmental nature and did not invalidate the basic design.

CONCLUSIONS

The development experience and problems encountered during the program to date result in these conclusions:

1. Incorporate built-in control signal redundancy and utilize hermetically sealed enclosures in the initial design.

2. Utilize standard electrical connectors or, if this is not possible, resort to an alternate source of procurement for any advanced designs.

3. Develop a failure analysis methodology to assist in the identification of single-point failures.

The Block II design of built-in redundancy has proven to be as reliable as the Block I system for less weight. Similarly, the use of standard connectors on Block II has been less troublesome than the advanced design used on Block I. The problem of single-point failures is one that will limit the reliability of any system. The complexity of space systems lends itself to a maze of failure modes and subtle circuits that make it almost impossible to analyze by the present brute-force methods. Analysis tools and methods are needed to assist in the total design process and ensure the operation of the system.

3.0 ATTITUDE REFERENCE SUBSYSTEM

This section discusses the SCS attitude reference subsystem (ARS). This subsystem provides the backup attitude reference capability for control maneuvers of the spacecraft. (The primary attitude reference is provided by the primary guidance, navigation, and control system.) The subsystem consists of strapdown body-mounted attitude gyros (BMAG) that are used for both attitude and rate sensing, together with an electronic assembly that generates Euler angles from these quantities.

After a discussion of the operation and requirements for the backup attitude reference subsystem, the tradeoffs among different mechanizations considered for this subsystem are discussed. The mechanizations considered were both strapdown and inertial platform systems. The principal problem with this subsystem was drift rate, which was solved by improved design and knowledge of this equipment. The major change for this subsystem was the way in which the Euler angles were generated. In Block I, the method was to use attitude change information, whereas in Block II rate data is used.

SUBSYSTEM DESCRIPTION

This section describes the function and operation of the Block II attitude reference subsystem. The purpose of the subsystem is to provide a backup attitude reference capability for the Apollo spacecraft control functions. The subsystem consists of two sets of three BMAG's, one set of which can be used in the rate mode, and a coupler unit that generates Euler Angles.

Functions

As a backup attitude reference subsystem for spacecraft flight-control operations, the functions performed by the subsystem are to provide:

1. Vehicle attitude errors (in body coordinates) to the vehicle backup control system during coast and thrusting phases

2. Vehicle attitude errors (in body coordinates) for display on attitude error needles

3. A set of Euler angles, which describe the orientation of the vehicle reference frame with respect to some inertial reference frame, for display on a three-axis attitude ball

4. Total roll angle (about the command module stability axis) for display during entry

5. Resolution of small Euler angular errors (treated as vector quantities) into body axes errors for display on attitude error needles. These angular errors are the difference between a set of Euler angles which describe a desired vehicle orientation to a set which describes the actual vehicle orientation.

Mechanization

The attitude reference subsystem is comprised of three BMAG's and an electromechanical Euler angle generator. The gyros are wide angle (±20 degrees) miniature rate integrating gyros with a single degree of freedom and the electronics necessary to allow them to be operated in either a rate or attitude mode. The subsystem does not contain any nongyroscopic sensors and therefore requires manual alignment using the scanning telescope, contained within the guidance and navigation system, for inertial alignment purposes.

The original reference subsystem mechanization stemmed from a design tradeoff performed early in the program. The original subsystem was envisioned to also include horizon and sun sensors for reference system alignment, local vertical (gyrocompassing) operation, and solar orientation during midcourse for spacecraft temperature control purposes. Early in the program, the control and operational advantages afforded by these nongyroscopic sensors were deemed inadequate to justify the additional complexity created by their inclusion. As a result, these sensors were deleted from the conceptual design of this subsystem.

Two different versions of the Euler angle generator (both analog) have been designed and developed on the Apollo program. The present (Block II) version is referred to as the gyro display coupler (GDC), while the Block I version is referred to as the attitude gyro coupler unit (AGCU). This constituted a major design change.

The GDC accepts body rate information from the BMAG's operating in a rate mode. This rate information is transformed into Euler rates and subsequently integrated into Euler angles by electrical stepping motors. These stepper motors then physically rotate shafts through Euler angles. Attached to these shafts are electrical resolvers which are used to

(1) transmit these shaft angles to the three-axes attitude ball or entry monitor display, (2) provide the body-to-Euler rate transformation, and (3) provide the Euler-to-body transformation required for the resolution of small Euler angular errors into suitable body axis errors for display.

The accuracy of the sensors, when used in conjunction with the GDC or AGCU, is highly dependent upon the magnitude and rate at which the maneuver is performed, whether single or multi-axis maneuver, and time between system alignment and maneuver initiation. The performance specifications for this system are written accordingly and, because of the many variables involved, the specifications are quite lengthy and are not included as part of this report.

Design Features

The design of the Block I AGCU was unique in that the BMAG's were operated in an attitude mode. Small body angles from the BMAG's are resolved through a body rate to Euler rate transformation and, after exceeding a specified threshold, are used to command fixed stepper motor angular velocities (Euler rates). Simultaneously, equivalent fixed gyro torquing commands (Euler rates) are issued, resolved through an Euler-to-body rate conversion and applied to the BMAG torquing amplifier, thus torquing the gyro back to null. As such, the AGCU was an integral part of a feedback loop closed around the gyro where the resulting gyro torquing commands were of a fixed magnitude but pulse-width modulated. The stepper motors rotated shafts to which electrical resolvers were attached to provide the necessary signal transmission and coordinate conversion capabilities.

DESIGN REQUIREMENTS

Requirements

The requirements for the attitude reference subsystem are as follows:

1. The ARS must provide a reference (both inertial and local vertical) from which large rotations of the vehicle can be measured and displayed during all mission phases. In addition, the ARS must provide small body axis angles for display on attitude error needles.

2. The ARS must provide a frame of reference for the SCS autopilot during both thrusting and coasting phases.

3. The reliability allocation for the ARS was 0.999276 for a mission life of 150 hours.

4. The more general accuracy requirements for the total SCS, as initially specified, are given in Table 3-1. From these numbers the following ARS error allocations were budgeted:

Body axis error angles to the error needles	=	±0.5 degrees/axis
Body axis error angles to the autopilot	=	±0.5 degrees/axis
Euler angles to the three-axis attitude ball	=	±0.5 degrees/axis

Design Requirement Tradeoffs

One of the requirements that the ARS must satisfy is the generation of a set of data suitable for display which defines the orientation of one reference frame with respect to another. Euler angles are one means of satisfying this requirement. The gimbal angles of an inertially stabilized platform physically measure these angles. A reference subsystem that measures vehicle attitude with these angles necessarily has two directional singularities. Since the CSM has a requirement for omnidirectional pointing for delta velocity (ΔV) maneuvers, and if the initial reference alignment is arbitrary, then a provision must be made that allows the vehicle to be pointed in any direction while still avoiding the singularity points. Two possible solutions might be to (1) use direction cosines, or (2) use a coordinate measuring frame that is different from the vehicle body reference frame.

The primary control mode reference system, with its three-gimbal platform, utilized the second of the above two solutions for avoiding singularities. This was true for Block I; however, the Block II coordinate measuring frame was aligned along vehicle axes. The problem was then handled by a proper selection of platform alignment orientations prior to pointing the vehicle.

Based on these considerations; and a desire for compatibility between the primary and backup reference systems, a tradeoff was conducted between reference subsystems which would provide Euler angles with the same sequence and coordinate measuring frame as the primary system. This selection provided the capability of displaying attitude information from either the primary or backup ARS on a common display (three-axis attitude ball).

A preliminary review of potential mechanizations that could provide this and the other required functions eliminated all but the following candidate systems.

Table 3-1. Stabilization and Control System Performance Requirements

Phase and/or operation	Accuracy (degrees)		
	Pitch	yaw	Roll
Local vertical coast	±5	±5	±5
Midcourse coast	±5	±5	±5
Thrusting (ΔV's)	±2	±2	±2
Entry	±5	±5	±3
Celestial observation	±2	±2	±2
Antenna pointing	±1	±1	±1

1. Strapdown attitude reference subsystems

   a. Two 2-DOF (degrees of freedom) attitude gyros

   b. Three single-DOF attitude gyros

2. Inertial reference platform subsystems

   a. Three-gimbal platform

   b. Four-gimbal platform (the fourth gimbal to be used only to maintain a reference during uncontrolled vehicle tumbling)

A functional description of each of these subsystems is provided in Figures 3-1, 3-2, and 3-3. All four mechanizations would be designed so that all ARS requirements were met.

The results of the tradeoff study are summarized in Tables 3-2 and 3-3. The values tabulated, while inexact, were felt to be representative. The numerical values assigned to cost, operation, and flexibility are used to establish a relative position with regard to desirability.

Table 3-2 indicates the tradeoffs for the nonredundant subsystems, while Table 3-3 considers the subsystems with sufficient redundancy (including spares) to satisfy the reliability allocation.

If a decision were to be made on the basis of the first table, and if reliability were not a key item, then the four-gimbal platform would be an obvious choice. However, since reliability must be satisfied, and since none of the subsystems of Table 3-2 satisfy this requirement, then the decision must be based upon the results of Table 3-3. From Table 3-3, if size and weight are critical, the four-gimbal platform would be the first to be eliminated, whereas, if operation and flexibility are essential, the two-free gyro subsystem would be the first to be eliminated.

The volume and weight increases from Table 3-2 to Table 3-3 are a direct result of subsystem redundancy requirements, e.g., it was determined that since inertial platforms were not in-flight maintainable, then two spare platforms would be required to satisfy the reliability requirement. The in-flight maintenance concept enhanced the weight and volume figures for the strapdown subsystem. (Block I systems were designed to be in-flight maintainable, whereas Block II systems are not.)

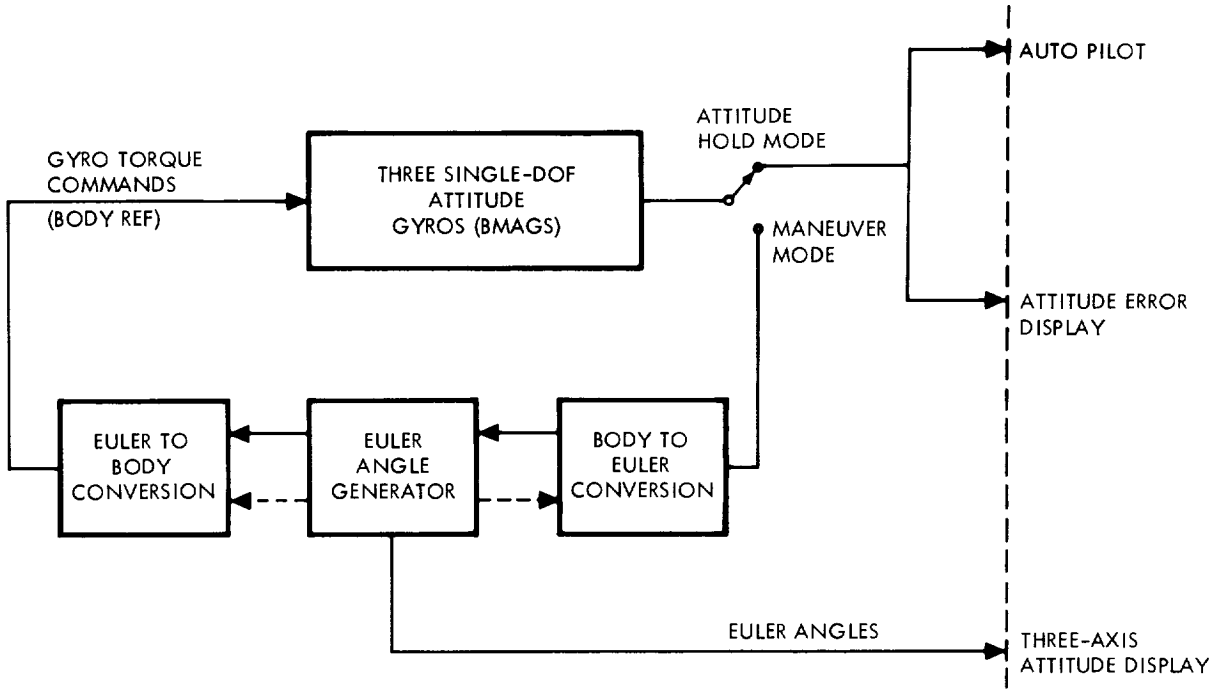

Figure 3-1. Three Single-DOF Attitude Gyro ARS (Block I/AGCU)

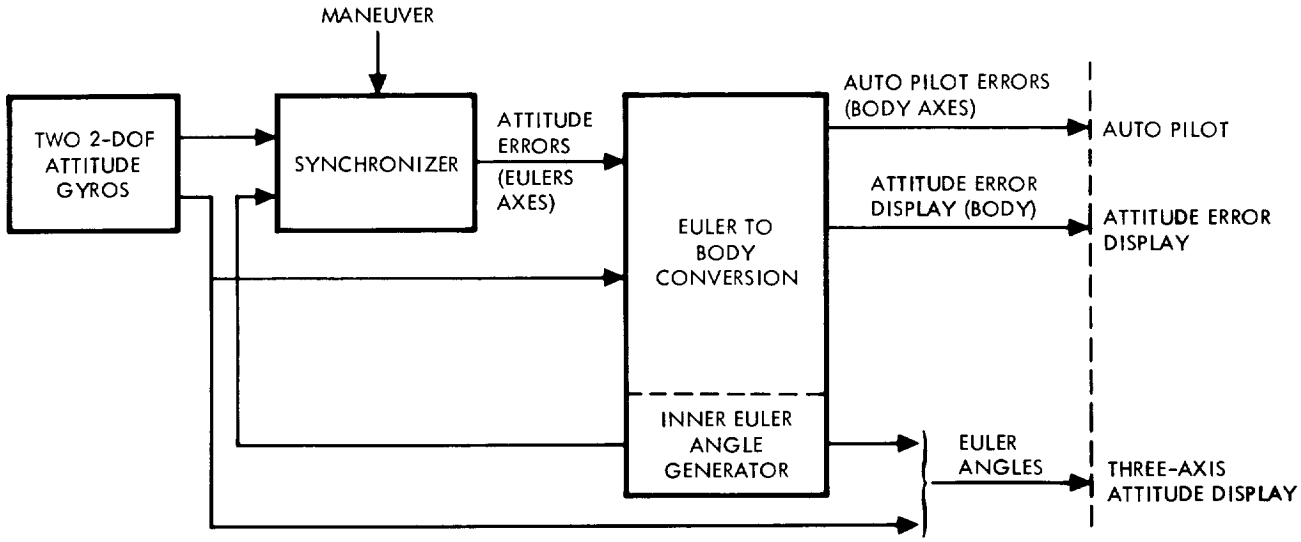

Figure 3-2. Two 2-DOF Attitude Gyro ARS

Table 3-2. Subsystem Tradeoff Evaluation (No Redundancy)

System	Reliability	Volume (in. ^{3})	Weight (lb)	Power (based on 150 hours)	Relative Cost	Operation	Flexibility
Two free gyros	0.87299	819.75	31.87	68.48 watts (10.27 kwh)	1	4	4
Three-gimbal stable element	0.8606	1134	35.06	68.05 watts (10.21 kwh)	2	2	2
Four-gimbal stable element	0.85830	1233	40.57	74.55 watts (11.18 kwh)	2.1	1	1
Three single-DOF gyros	0.86346	746	26.18	30.05 watts (4.51 kwh)	1.5	3	3

Table 3-3. Subsystem Tradeoff Tabulation (Reliability Equal to or Greater Than 0.999276 Through In-Flight Repair)

System	Reliability	Volume (in. ^{3})	Weight (lb)	Power (based on 150 hours)	Relative Cost	Operation	Flexibility
Two free gyros	0.99971	1234	49.90	64.48 watts (10.27 kwh)	1	4	4
Three-gimbal stable element	0.99944	2348	71.16	68.05 watts (10.21 kwh)	3	2	2
Four-gimbal stable element	0.99931	2454	81	74.55 watts (11.18 kwh)	3.3	1	1
Three single-DOF gyros	0.99955	1036.5	37.99	30.05 watts (4.51 kwh)	1.8	3	3

The reliability calculations did not include the effects of equipment being turned on and off; however, it was felt that the 150-hour mission life would yield a reasonable number for reliability purposes.

The tradeoff parameters of operation and flexibility are discussed below.

Operation

The tradeoff on operation separates the subsystems on the basis of the freedom they allow in the design and operation of the spacecraft.

The four-gimbal platform is rated the highest in that it does not place any practical limits on the vehicle attitude orientations or tumbling rates. The three-gimbal platform, rated second, has two areas of attitude singularities, (gimbal lock regions) and while it also has no practical rate limitations, arbitrary tumbling rates can carry the system into gimbal lock resulting in a loss, or degraded performance, of the reference information. Either the three or four-gimbal platforms inherently provide the highest degree of accuracy, which permits longer periods between alignments.

The three single-DOF attitude gyro subsystem was rated third, above the two-free gyro system, in that lower drift rates were available during attitude hold periods and that only two areas of attitude singularities existed as opposed to four areas with the two-free gyro subsystem. The major disadvantages of this subsystem lie in the fact that (1) since the gyros must be torqued at vehicle rates, the rate capability of the system is limited well below the other systems considered, and (2) the subsystem accuracy (Euler angle generation) is not only a function of the gyro drift errors but also of the magnitude of the maneuver angle.

Flexibility

Flexibility, as used here, reflects the ability of a subsystem to meet future operational changes and/or more demanding requirements as the program progresses.

The gimballed subsystem again rates the highest with the four-gimbal subsystem at the top. While this study did not consider the use of direction cosines with the four-gimbal subsystem, the ability to do so does exist and must be considered for future growth.

The accuracy and operational freedom of the two- and three-gyro-subsystems were not expected to improve significantly with further development; however, the low drift of the single-DOF gyro was adjusted to provide the best basis for future change and was rated as third in flexibility.

Tradeoff Study Conclusions

The following conclusions were drawn from this tradeoff study:

1. An inertially stabilized platform provides the best solution to the attitude reference subsystem problem from a performance and operational point of view - in particular the four-gimbal subsystem. However, the reliability requirements are such as to result in an unacceptable weight and volume penalty.

2. The three single-DOF-attitude gyro subsystem provides the best compromise solution to the reference subsystem problem in terms of all parameters considered. Its principal limitations are (1) accuracy errors associated with gross vehicle maneuvers (normal operation) and (2) inability to maintain an attitude reference under conditions of high and uncontrolled vehicle tumbling rates (emergency operation). (The only subsystem considered which could perform satisfactorily under the emergency conditions was the four-gimbal subsystem.) In addition to this conclusion, it was also recommended that a hardware design study be initiated on an in-flight maintainable, four-gimbal platform which, if feasible, could be phased into the program at a later date.

3. The two-free gyro subsystem was considered the most complex system studied. This, in addltion to the operational limitations (four areas of attitude singularities) and high drift rates, caused this system to be rated below the three-gyro subsystem.

A decision was subsequently made to utilize the three-gyro subsystem concept as the Apollo backup attitude reference subsystem. This decision resulted in a qualification to the original accuracy requirement of ±0.5 degree axis in the generation of Euler angles. (The magnitude of the maneuver also had to be considered.)

During the study it was felt that a maneuver accuracy equal to 1 percent of the maneuver angle would be attainable. This error resulted from resolver errors, gyro torquers, and torquer amplifier repeatability and power supply regulation. The performance requirement for this subsystem was then changed to be commensurate, assuming that if the required maneuver was greater than 50 degrees, the subsystem would be realigned at the new orientation and prior to execution of the required control system function.

Also during the study it was assumed that the total effective gyro drift error would be compensated in the system to one degree per hour or better. This assumption later led to a proposal for in-flight drift trim of the gyros.

PROBLEMS AND CHANGES

Problem

Perhaps the most significant system design problem encountered in the development of the backup ARS was the reference drift problem, particularly during rotational maneuvers. The gyros and torquing amplifiers had higher drift characteristics than expected, 7 degrees/hr and 30 degrees/hr, respectively. Since the performance capability was based upon a 1 degree/hr drift rate, in-flight gyro trimming was proposed.

This, however, imposed a heavy and unacceptable reliance on the primary system if the trimming were to be accomplished automatically, e.g., using the guidance and navigation sextant and digital computer. A ground rule was then imposed which required that in-flight trim could utilize only the PGNCS scanning telescope which was normally required for alignment purposes.

Methods for performing the in-flight trim (compatible with the above ground rule) were then studied. The results of these studies indicated that not only did in-flight trim impose time consuming tasks upon the astronaut, it was also ineffective. In fact, if the trim were performed on an individual axis basis, then the time required to trim one axis would invalidate the results of the previous axis trim because of the limited stability of the torquing amplifiers.

Following this conclusion, a review of the drift problem was undertaken to determine if the requirement for in-flight trim could be deleted. A mechanization was arrived at that provided the final resolution to this problem, and which resulted in the following changes:

1. All requirements for in-flight trim were deleted; however, a requirement was established to trim the gyros at Cape Kennedy prior to launch. (This requirement was recently deleted based upon test data gathered on the Block I program.)

2. An additional switch was placed between the torquing amplifier and the gyro torquer so that the torquing amplifier was connected to the torquer only during the actual maneuver.

3. Time constraints were established on the time allocated to perform a maneuver and the time interval between the alignment and the initiation of the maneuver.

4. The torquing amplifier maximum range was reduced in pitch and yaw. (This range was again increased and, in fact, became even larger for the Block II system.) Certain other specification changes were imposed on system components.

5. The error budget for the ARS was increased to allow for larger reference system errors.

Changes

A major design change to the ARS was initiated following the Block II definition study performed by NASA MSC. This study concluded that a number of operational and functional changes should be made to the combined PGNCS/SCS system. Specific changes to this equipment were also enumerated. In terms of the ARS, perhaps the most significant equipment change requirements were deletion of the AGCU, addition of a simple set of single-axis attitude displays which could be driven by either integrated rate outputs from the "caged" BMAG's or inertial measurement unit (IMU) gimbal angles, and deletion of in-flight maintenance.

An additional desired equipment change related to the ARS was the replacement of the three Block I spring-restrained rate gyros by an additional set of three BMAG's.

These changes were then studied in more detail by representatives of NASA, MIT, and NR. A summary of these decisions, related to the ARS, is given below:

1. A backup ARS with an all-attitude capability would be maintained in the Block II system, i.e., three-axis attitude ball display rather than the three single-axis attitude displays. This requirement was based upon a strong astronaut preference for this type of display.

2. The design problems associated with using the Apollo guidance computer in conjunction with the BMAG's for generating the Euler angle set, and driving the ball display, were of such a nature as to discourage this method as a possible solution.

3. An analog Euler angle generator (GDC) mechanization was selected over a digital version for the Block II backup ARS based upon cost and schedule considerations. A functional description of this system is given in Figure 3-4.

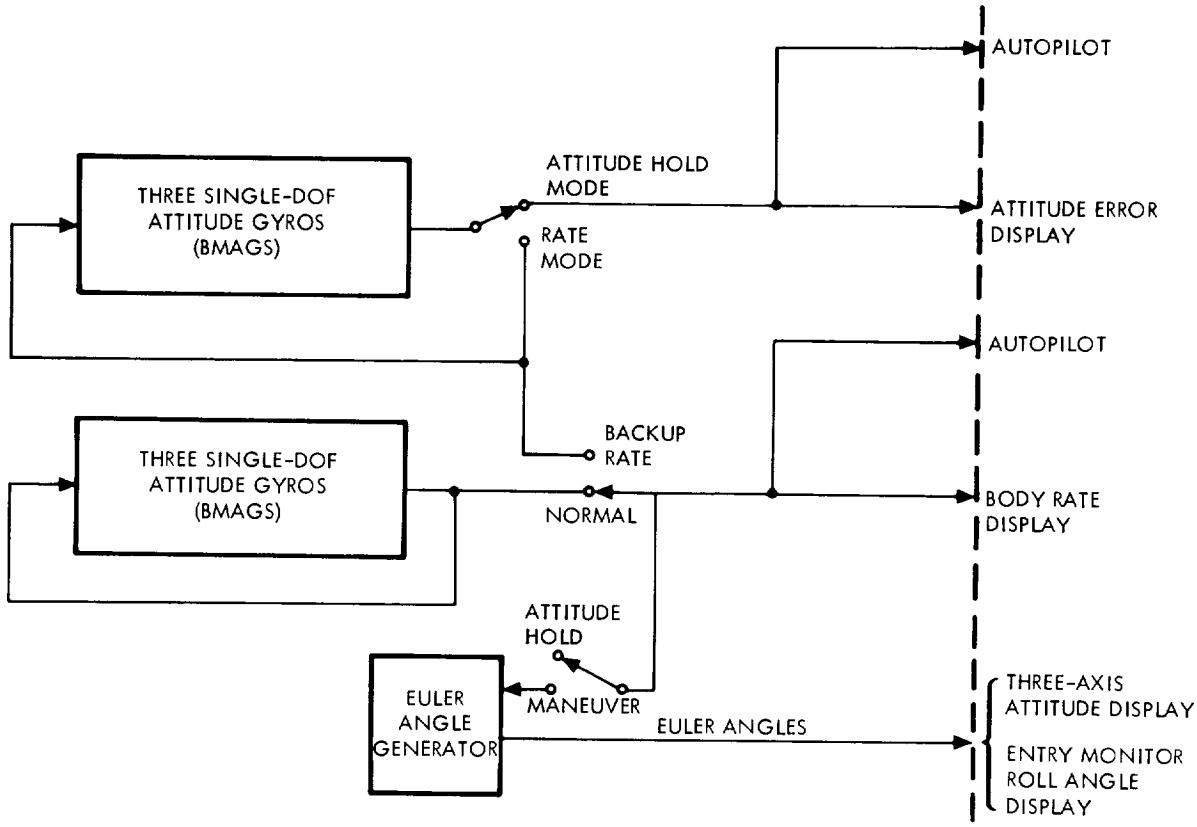

Figure 3-3. Inertial Platform ARS (Three or Four Gimbals)

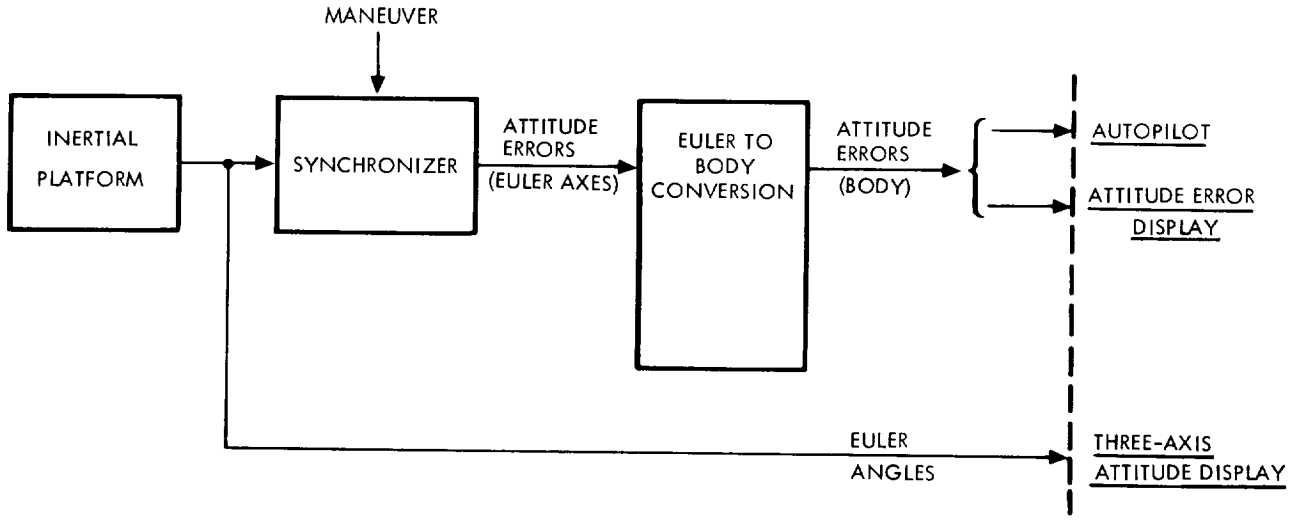

Figure 3-4. Three Single-DOF Attitude Gyro ARS (Block II/GDC)

4. The six-BMAG configuration was selected for Block II in preference to the Block I configuration of three BMAG's and three spring-restrained rate gyros. All six of these BMAG's had the capability of being operated in the rate mode and providing rate data of sufficient accuracy to be used in the generation of the Euler angle information by the GDC.

The areas in which there were ARS requirement changes are indicated in Table 3-4. The tradeoffs between the various systems studied are tabulated in Table 3-5. The systems identified in Table 3-5 are described below:

System A - This is an all-analog system which integrates body rates and displays this information on three separate attitude-display needles The system does not meet the all-attitude capability required of the backup ARS.

System B (GDC) - This is an all-analog system which generates Euler angles for display on a three-axis ball. The electronic feedback loops around the BMAG's are of the Block I type (BMAG's in rate mode) except with greater torquing capability. This is the system selected for Block II.

System C - This system is the same as System B except that the Euler angle generator is mechanized digitally.

System D - This system is an all-digital version of system B, including pulse rebalance loops around the gyros.

Table 3-4. ARS Requirements Changes

Requirement	Block I	Block II
Rate sensor requirements	±30°/sec	±50°/sec
Entry and manual TVC rate requirements:		
Roll	±25°/sec	±50°/sec
Pitch and yaw	±5°/sec	±50°/sec
Entry roll attitude display accuracy	No requirements	±5°

Table 3-5. Attitude Reference System Tradeoff (Block II)

System	A	B	C	D	E	F
Accuracy (50-degree maneuver +10-minute hold)	0.66°	1.58°	0.51°	0.4°	0.56°	0.4°
Weight (lb)	50.7	54.7	60.2	35	51.2*	24*
Power (watts)	63.4	63.4	80.7	90	63.4	
Reliability	0.99	0.98	0.99	0.998	0.98	0.98
Backup system independence	1	1	1	1	2	2
Rate capability	1	2	1	1	1	1
Growth potential	2	2	1	1	1	1
Astronaut controls-displays interface	3	2	1	1	1	1

*Note: Weight excludes G&N computer penalty.

System E - This system is the same as C except that the Euler angle generator capability is contained within the guidance computer.

System F - This system is the same as D except the Euler angle generator capability is contained within the guidance computer.

In the evolution of the ARS, certain other design changes were made, motivated by a desire to simplify the system.

The first of these was the deletion of the horizon and sun sensors from the backup ARS. This, however, occurred early in the program and did not result in changes to actual hardware. With the deletion of the horizon sensor gyrocompass local vertical mode, a fixed gyro torquing signal (orbit rate) was used to provide a pseudo or open-loop local-vertical mode. This signal was resolved into torquing currents to the appropriate gyros, depending upon the vehicle orientation with respect to the local vertical. The requirement for this mode of operation was later felt to be unjustifiable and the mechanization required to provide this capability was deleted from the system. In 1967, this function was again added at the request of the astronauts. The NASA provided as GFE the orbital rate drive electronics for Apollo and the lunar module (ORDEAL).

The secant function mechanization contained in the transformation from body to Euler rates was deleted from the AGCU mechanization. Because of the manner in which these angles were generated in the Block I system, the deletion of these functions in effect changed the feedback gain around the gyros. The net effect was that of varying the threshold levels for torquing the Euler stepper motors. For reasonable inner-gimbal angles, the error contribution due to this change in threshold level was found to be acceptable.

CONCLUSIONS

Since the operation and performance of this subsystem has been satisfactory during the spacacraft flights and developmental problems do not suggest any changes, there are no hindsight suggestions.

4.0 THRUST VECTOR CONTROL SUBSYSTEM

This section discusses the thrust vector control (TVC) subsystem of the SCS. The TVC subsystem provides flight control of the Apollo spacecraft during thrusting of the service module service propulsion system (SPS). The present TVC provides for both automatic and manual control with the lunar module on (LM ON) and the lunar module off (LM OFF).

The function and operation of the present subsystem, the requirements and ground rules used in establishing the subsystem design, and the problems associated with the development of this subsystem are presented.

SUBSYSTEM DESCRIPTION

Functions

The Apollo spacecraft has two modes of service propulsion flight control—the primary and the backup mode. The primary mode uses the guidance and navigation digital computer to generate control commands whereas the backup mode uses the analog electronics of the SCS. As a backup system, the function performed by the TVC is to provide pointing and stabilization during thrusting maneuvers. These thrusting maneuvers include midcourse delta V's, lunar orbit insertion, transearth injection, earth orbit retro, and high-altitude abort.

The second function of the TVC subsystem is to provide both primary and backup control for the engine position system.

Mechanization

The TVC subsystem consists of analog electronics to generate engine gimbal commands and analog electronics to control the positioning of the service module main engine. A functional diagram is shown in Figure 4-1. The engine servo system accepts commands from the following modes of operation:

1. Primary mode commands from the guidance and navigation computer

2. Backup automatic (SCS) mode commands

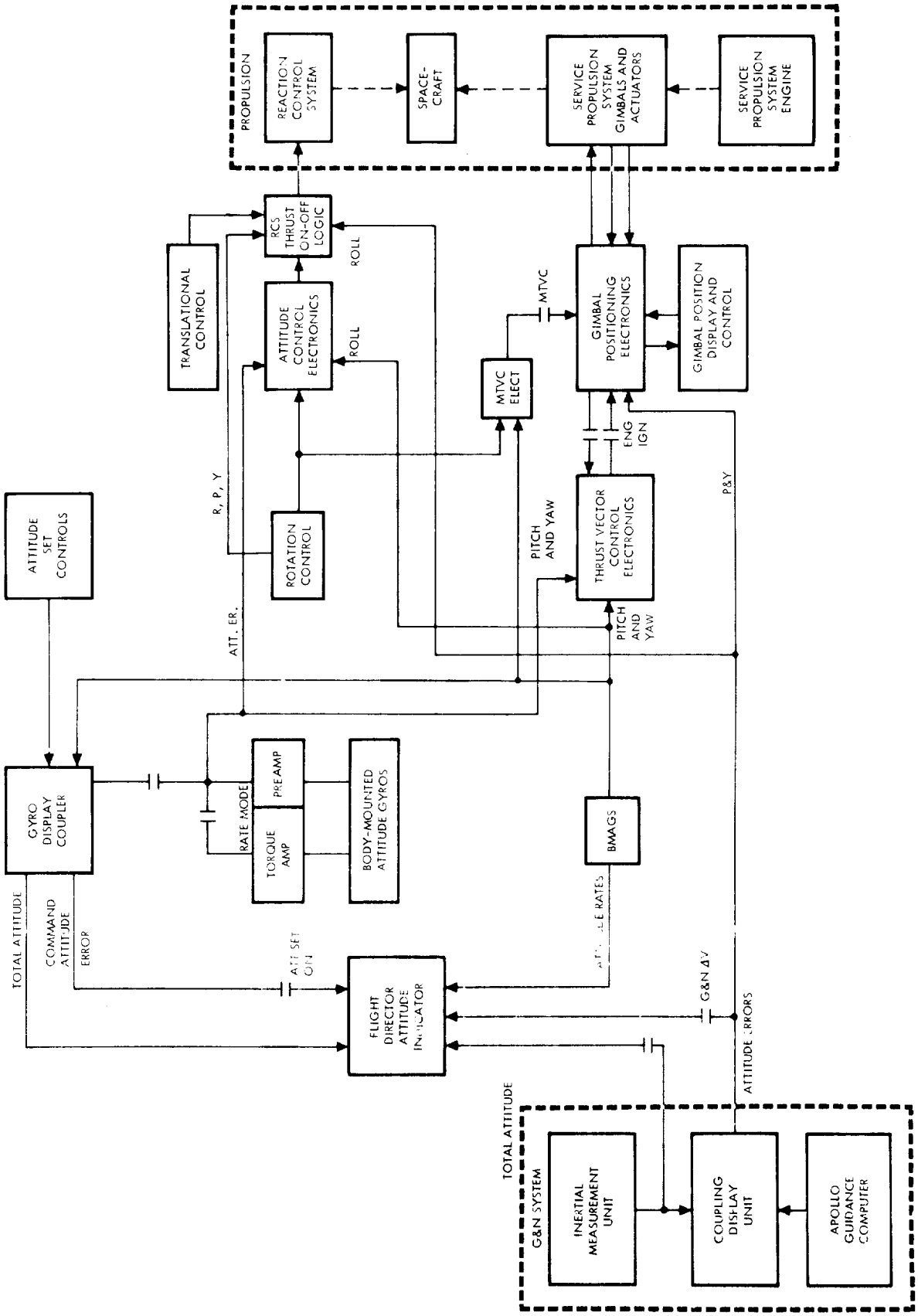

Figure 4-1. Thrust Vector Control Functional Diagram

3. Rotation hand controller commands with rate damping and compensation.

4. Rotation hand controller commands directly.

The backup automatic autopilot consists of vehicle attitude and attitude rate feedback and the integral of the sum of gimbal position and vehicle attitude error. These sensor outputs pass through compensation networks; the exact form depending on the vehicle configuration, the output of which forms the engine command. The manual mode of control consists of (1) using the rotation controller output either directly into the gimbal servo system or combining it with the vehicle rate information, and (2) passing it through some compensation and then to the gimbal servo. The rate feedback mode is not used with the lunar module attached.

The major subsystem in the TVC subsystem is the SPS gimbal servo system, which consists of three basic elements—the actuator, the gimbal assembly, and the servo electronics. The actuator is controlled by pitch and yaw loop servo systems employing the sensing of actuator extension or retraction rate and position. Engine angular position, with respect to the spacecraft, may be commanded by electrical input to the servo amplifier.

The actuator consists of a dc motor geared to a magnetic-particle clutch, the output of which is geared to a recirculating ball lead screw, which converts the rotary clutch motion to linear actuator travel. A velocity transducer supplies an ac signal proportional to clutch output angular velocity, and a position transducer supplies an ac signal proportional to the linear displacement between the actuator frame and output shaft. These signals go to the servo amplifier, and to the gimbal position indicator on the pilot's display panel.

The engine angular travel is limited, by spring snubbers within the actuator, to ±4.5 degrees in yaw and ±4.5 degrees in pitch. The yaw actuator electrical null, which is at the mechanical center, is 0 degrees in yaw and 1-1/2 degrees in pitch from the spacecraft centerline; distortion of the thrust structure during the firing of the engine brings these values to 1 degree in yaw and 2 degrees in pitch. This unsymmetrical gimbal travel is dictated by variations in the lateral position of the vehicle center of gravity as propellant is consumed.

The main element of the gimbal assembly is the circular gimbal ring containing the four gimbal bearings set along two orthogonal coplanar axes. The engine mounts are attached to the inner-race of the yaw bearing, and the mounts, in turn, are mounted to the spacecraft. Two "thrust struts" tie the pitch inner-races to the engine injector head. The engine itself fits through the gimbal ring so that the plane of the ring intersects the engine near the throat of the combustion chamber.

The yaw actuator rod-end fittings, which swivel, are mounted at the gimbal ring about half-way between the pitch and yaw bearings and to the spacecraft structure at the inner edge of the No. 1 web. The pitch actuator drives between the injector head and the gimbal ring, about half-way between the pitch and yaw bearings. The actuator lever arm used for rotating the engine on its bearings is approximately 1 foot long. The engine and gimbal mounts are shown in Figures 4-2 and 4-3.

Design Features

Three design features of the TVC system are as follows:

1. Electromagnetic particle clutch actuator

2. SCS integrator

3. Manual TVC mode

An electromagnetic particle clutch actuator is used to apply positioning forces on the main engine rather than the traditional hydraulic actuator. The use of this actuator for Apollo was the first time that a magnetic particle clutch had been used for a large thrust engine in a space environment.

The service module propellant system consists of two sets of oxidizer and fuel tanks. The engine is fed in a serial fashion rather than in a parallel manner, which results in large excursions of the spacecraft's center of gravity during the course of the mission. The nozzle and attitude position information are summed and then integrated to form a bias signal for the engine gimbal servo. In this manner, the center-of-gravity motion is tracked by the engine.

The high angular accelerations possible with the SPS (21,000 pounds thrust) was first thought to be too large to allow manual control of the vehicle attitude during thrusting. Simulation studies midway through the program indicated rate damped attitude control of light vehicles and direct attitude control of heavy vehicles were definitely feasible. Manual TVC offers the astronaut a simple control system capable of satisfying crew survival requirements and is essentially redundant to the other modes of thrusting.

DESIGN REQUIREMENTS

This section describes the design requirements and ground rules used for the Apollo TVC subsystem. The requirements consist of those supplied by the customer and those internally generated. The ground rules are those used to establish the internal requirements. A substantial amount of the requirements relate to body-bending parameters and reflect the difficulty the program has had in developing good data.

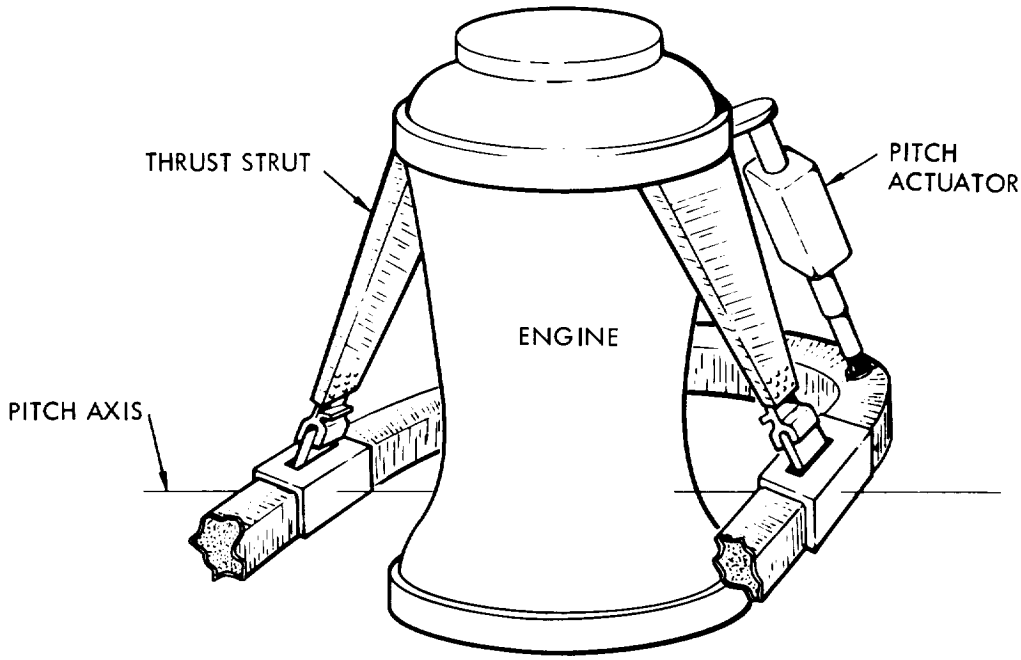

Figure 4-2. SPS Engine Mount

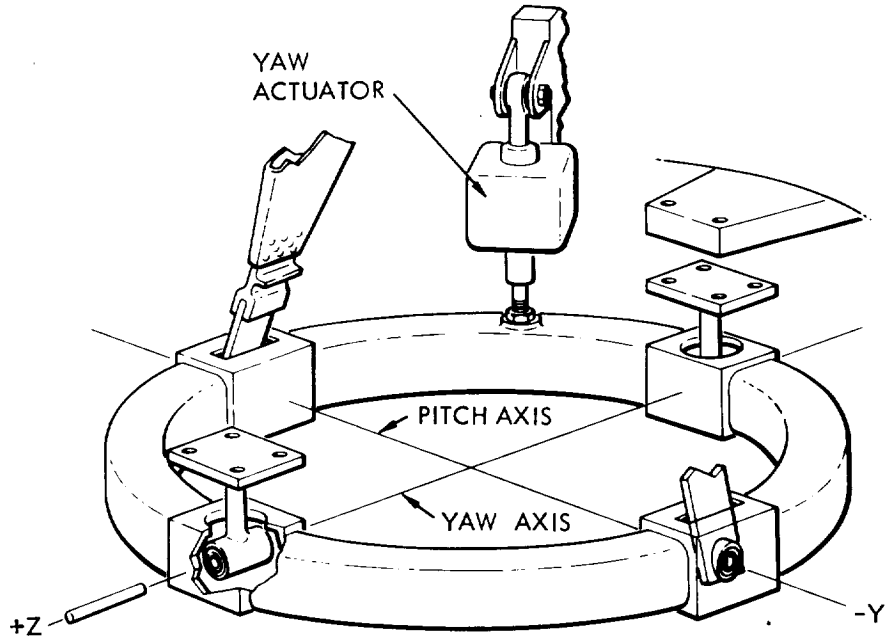

Figure 4-3. SPS Gimbal Mount

Requirements

Customer Requirements

The basic design requirements for the backup TVC subsystem are as follows:

1. Maintenance of linear and nonlinear stability

2. Satisfy pointing accuracy of:

   a. Translunar midcourse corrections: 5.7 degrees (3σ)

   b. Transearth injection: 1.54 degrees (3σ)

   c. Transearth midcourse: 5.7 degrees (3σ)

The following internally generated requirements and ground rules generally apply to satisfaction of stability requirements.

Internal Requirements

In an attempt to further define the basic requirements, a set of internal design requirements were generated. The ground rules used in the establishment of these requirements are given in the next section.

Angular Control. Pointing error (ϵ_θ) is defined as the angle between the desired ΔV vector and that achieved at the termination of thrusting, as illustrated below:

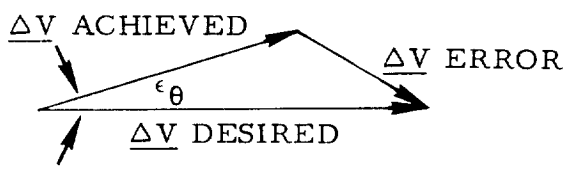

Note that the magnitude of the delta V achieved vector is independent of the pointing error as defined here.

These requirements apply to each autopilot channel (pitch and yaw) independently and will be met in the presence of the expected error sources. Values for pointing error requirements include all control system effects (SCS, vehicle dynamics, etc.) from initiation of the ullage maneuver to the end of thrust tailoff.

These requirements do not apply to other errors incurred in performing an SCS ΔV burn, such as those involved in aligning the spacecraft to the thrusting attitude; only the TVC portion of the total ΔV budget is tabulated above.

Magnitude Control. Control of the magnitude of the delta V, when the burn is accomplished in the backup mode, will be within 1.3 percent or 0.7 fps (three sigma) for all maneuvers, exclusive of propulsion uncertainties.

Stability Requirements. The TVC system will have a minimum of 30 degrees phase margin and 6.0 db gain margin over the linear (non-saturation) range of operation.

These margin requirements must be met in the presence of one sigma tolerance conditions with respect to system parameters which affect stability. The system must not show instability for a three-sigma tolerance buildup.

SM Abort. Vehicle pitch and yaw angular rates will converge to an angular rate of 2.0 deg/sec or less within 10 seconds for the initial conditions specified. In addition, vehicle motion will converge from any combination of initial conditions.

Vehicle Attitude. Hunting or limit cycling of vehicle attitude because of autopilot dynamics will not be of such magnitude as to interfere with system accuracy or to cause any display activity that would introduce an uncertainty in monitoring or failure detection with regard to proper system operation. This criterion would be met if vehicle attitude did not exceed one-fourth of a degree (peak-peak) at any frequency below 1 cps, and 0 degree above 1 cps.

Engine Angular Position. The SPS engine positioning servo subsystem should not produce a position limit cycle amplitude in excess of one-tenth of a degree (p-p) at any frequency below 2 cps. Limit cycling of any amplitude at a frequency above 2 cps is unacceptable.

Ground Rules

The ground rules used to establish these internal requirements are listed as follows:

1. System stability as shown in Table 4-1.

2. Phase stabilization of bending modes 18 rad/sec or less.

3. Maximum gain consistent with system stability.

4. Roll-off filter natural frequency as low as possible.

Table 4-1. Criteria for Linear Small-Signal Stability

Modes	Stability			REMARKS
	Nominal	Nominal ($\pm 1\sigma$)	Nominal ($\pm 3\sigma$)	
Rigid body	Phase margin 40° Gain margin 10 db	Phase margin 30° Gain margin 6 db	Phase margin 0° Gain margin 0 db	(Open rate-plus attitude-plus integrator)
Bending below 18 rad/sec	Phase margin 45° Gain margin 10 db	Phase margin 35° Gain margin 6 db	Phase margin 0° Gain margin 0 db	
Bending above 18 rad/sec	Not applicable	Open-loop response less than -10 db		
Slosh	Vehicle angular rate not to exceed 0.25 deg/sec P-P (after termination on initial start transient)	Not applicable		

NOTE: "Nominal" indicates evaluation of stability with all parameters except bending and clutch gain parameters set at their nominal values; bending and clutch gain parameters are used at the extremes of their ranges which yield least stability.

5. Bending data tolerances:

	Frequencies	Mode Shapes
LM ON	±20%	±50%
LM OFF	±25%	±25%

6. Bending data will always be used at the extremes of ranges yielding the least stability.

7. Time-critical performance requirements exist during transearth injection which require failure takeover without shutdown of the SPS.

8. Circumlunar-free return abort mission is always carried out with the LM ON.

9. SM abort from booster failures to be in automatic modes, not MTVC.

10. MTVC will be used as the takeover mode for all CSM guidance and control (G&C) failures that occur during power flight.

11. There is no requirement for LM ON delta V's initiated in the MTVC mode, but MTVC is required for takeover of failures during LM ON delta V maneuvers initiated in the automatic modes.

12. Lunar orbit injection (LOI) is done only in the primary mode. Failures in the primary mode prior to LOI warrant aborting LOI.

13. Failures during LOI require MTVC takeover to damp transients and shutdown of SPS.

14. MTVC requirements with the LM OFF are for the rate-damped mode only.

PROBLEMS AND CHANGES

This section discusses the evolution, problems, and changes that affected the TVC subsystem. The problems discussed are development of the electromagnetic clutch actuator, body bending data variations, and series propellant feed system.

Problems

Magnetic Particle Clutch Development

The electromechanical actuator was a problem primarily caused by the difficulties encountered in the development of the electromagnetic clutch.

The principal problems with the clutch were overheating and nonlinear characteristics. The nonlinear effects, although affecting vehicle limit cycle and making one actuator appear slightly different from another, did not substantially interfere with the system operation. The primary cause of clutch overheating is thrust misalignment during the SPS burns. The overheating caused the gain of the clutch to decrease, not only for that burn but for subsequent burns as well. This gain decrease could be as great as 50 percent. On the other hand, a new actuator could have a clutch gain of greater than 50 percent of nominal. As a result, the control system design had to allow for clutch gain variations of ±50 percent.

There were three design changes to the actuator in an attempt primarily to prevent the clutch from overheating. This was done by changing the gearing of the motor to the clutches. The slip speed between the rotating input and stationary output members of the clutches is then less and the subsequent heat generation is less. The penalty for the design change is that, for a given motor speed, the engine moves slower.

A lower actuator rate resulted in a loss of some large initial condition or nonlinear stability capability. The mission requirements were then changed to prevent a failure or starting transient that would be outside the capability of the system to recover. The nonlinear stability problem was experienced in the Block I system. The Block II system has a lower loop gain than Block I and has smaller limits on engine excursion and thus is less susceptible to the actuator low rate changes.

The autopilot has not been changed because of these development problems; however, during required SCS changes for the variation in body bending data the latest estimate of the actuator performance was factored into the new design. Thus far, there have been no flight failures or problems.

Body Bending Data Variation.

The variation in body bending data has been a major problem. Table 4-2 lists the various sets of bending data available. The original design was based upon the first set of data. In April 1965, the NASA deleted modal testing for the CSM and CSM plus LM. As a result, the autopilot was changed in September 1965 to make it less sensitive to body bending. At that time tolerances of ±15 percent for the bending frequency and ±10 percent for the mode shape were assumed. The body bending set No. II is a reanalysis of set I and did not affect the design.

In the spring of 1965, the Boeing Aircraft Company performed a modal analysis that separated the structure into its component parts rather than assuming that the structure was a beam. These data (set No. III) indicate a first-mode frequency 50 percent less than the 1963 data. This variation is considerably outside the 15 percent tolerance; however, the data were considered preliminary.

Table 4-2. Block II TVC Body Bending Data

Set No.	Reference	Date	LM	Source	Use	Dominant Frequency	
						Rad/Sec	CPS
I	SD 63-334	11/3	on	NR	SCS 1964 design and	12	1.91
	SD/DR/65-003	1/65	off	NR	1965 redesign	137	21.8
II	SD/ASD/65-058	8/65	on	NR	MIT MOD O	9.3	1.48
	SD/ASD/65-057	8/65	off	NR	data base	125	19.95
III	D2-84124-5	4/66	on	Boeing	NASA official	6 & 8	0.95 and 1.27
	D2-84124-5	4/66	off	Boeing	data book entry	47	7.5
IV	SD 66-7	8/66	on	NR	December 1966	7	1.11
	SD/ASD/66-161	9/66	off	NR	redesign	9.0	1.43
V	MSC-S-39	5/67	on	TRW	1968 redesign	12.6	2.09
VI	S&M/VD/SR/67-007	6/67	on	NR		12.1	1.93

NR - North American Rockwell Corp.

Boeing - Boeing Aircraft Co.

TRW - Thompson Ramo-Woolridge

In January 1966 on Spacecraft 009 (the first Block I flight spacecraft), a TVC system instability occurred during checkout on the stack at KSC. Evaluation of the data indicated that the cause was probably a body-bending resonance at approximately 17 cps. The bending analysis at that time had indicated that the free-free mode would be in excess of 30 cps. Although the test was performed on the S-IB stack, it was felt that 17 cps could be indicative of a free-free mode at the CM/SM interface. The Block I TVC system was modified and the instability cured. Considerable doubt, however, was introduced in the analytically generated bending data. The first two Block I vehicles did not exhibit any in-flight TVC instability, although components of signal at about 17 cps have been evident in the rate-gyro traces of every Block I flight. Shortly thereafter, the modal analysis task was reassigned to Thompson Ramo-Wooldridge (TRW).

In the late summer of 1966, NR produced another set of bending data (set No. IV). The LM ON analysis indicated a first-mode frequency of 7 rad/sec, which was in agreement with the Boeing data. At that time, it was indicated that the Block II SCS was unstable when certain of the unofficial sets of bending data were used and that if modifications were required, they would have to be made soon if existing hardware schedules were to be met.

Shortly thereafter, a decision was made in conjunction with the customer to redesign the SCS to provide adequate stability margins for all existing sets of bending data. The performance requirements were changed to their present value at that time. This relaxation was required because system performance was degraded when the system gains were reduced to the extent necessary to provide adequate stability for the range of bending data used. The SCS electronics fabricated were designed to accommodate dominate modal frequencies in the range of 1.0 to 1.6 cps.

Revised Grumman Aircraft Company stiffness data for the lunar module were forwarded to NR from NASA/MSC (Grumman data revised December 1966) and frequencies were determined using these revised data for the CSM+LM half-full condition in April 1967. The first three frequencies were 2.15, 2.60, and 2.90 cps. Also at this time, TRW data were available for the CSM+LM quarter-full propellant loading condition. The first two bending modes were 2.1 and 2.4 cps. In the summer of 1968, it was decided to modify several spare electronic boxes to a design based upon bending in the 1.75 to 2.86 cps range. Modal testing at the end of the summer of 1968 indicated bending frequencies of 2.76, 3.02, and 3.87 cps. It was thus decided to make the new design common to all spacecraft subsequent to 103. Thus three separate autopilot configurations were fabricated as flight articles before the first LM-ON flight.

Series Propellant Feed System

The service module propellant storage consists of four tanks, two each for oxidizer and fuel. The propellant is fed to the engine in a serial fashion rather than all four tanks at once. Thus, the center of gravity of the spacecraft not only moves longitudinally but laterally as well during propellant consumption. This lateral motion of the center of gravity means the engine must move about two degrees in Block II (nearly four degrees in Block I) to keep pointing through the center of gravity. To provide a bias signal to the engine for tracking the center of gravity, the autopilot generates the integral of the nozzle position and vehicle attitude with a stage called the SCS integrator. The addition of this loop requires a slightly lower autopilot gain than would be the case without it. Reduced travel of the engine would, furthermore, cause less effect on the vehicle during engine hardover failure. That is, engine deflection limiting has a stabilizing effect on the vehicle control system, and smaller engine deflections produce smaller lateral loads and moments on the space spacecraft structure.

An attempt was made to change to a parallel feed system but the spacecraft design was too far along to warrant the change.

Tradeoff

A tradeoff that affected the TVC was the hydraulic actuator versus the electromagnetic particle clutch actuator. The problems associated with the electromagnetic particle clutch actuator make the tradeoff between it and the hydraulic actuator relevant for future system considerations. These problems consisted primarily of clutch gain variations of ±50 percent. The tradeoff results, which are summarized in the following paragraphs, represent results of a study performed just after the program started, and certain results would perhaps be modified if the tradeoff were performed today.

Power Requirements. The power requirements of the electrohydraulic system are considerably higher than the electromechanical system because of its inefficient low-power capability. During the normal operating condition, which consists of more than 80 percent of the thrust vector control operating time, the power requirements of the electrohydraulic system are about 100 percent higher than that of the electromechanical system. As a result, total power requirements for the electrohydraulic system are about 75 percent higher for the duration of the 500-second TVC operating time.

Space Compatibility. The electromechanical system is more compatible with the space environment because of the absence of a working fluid which has to be contained in a reservoir under pressure. Furthermore, a hydraulic system would have to be provided with a temperature control which would have to maintain the working fluid between -65 and +300 F.

Reliability. The study indicated a slight reliability superiority of the hydraulic systems over the electromechanical system. Capability of reliability growth lies with the electromechanical system because of the smaller number of subassemblies in the system and its better space compatibility.

Growth Potential. The growth potential of the electromechanical system is higher in view of the possibility of extending the duration of missions and the severity of the environment without major changes. The growth potential of a hydraulic system is less favorable, since temperature control would have to be provided to cover a more severe temperature environment than is presently specified.

Changes

The basic configuration of the TVC has not changed since its initial design. The Block I system was initially required to have LM ON capability and was the primary method of vehicle stabilization during thrusting. The guidance or steering of the vehicle was accomplished by guidance and navigation computer commands. At the time of the Block II redesign, the Block I system was changed to LM OFF capability only and MTVC was added. The Block II system was made solely a backup mode to the primary control with a system for LM ON and LM OFF. The manual TVC function was made a part of the system as well. Because of the body bending data problems, the Block II system gains and compensation were changed three times and the Block I system once.

CONCLUSIONS

The major development problem encountered with the TVC subsystem was the continual variation in body bending data. These data, until late in the summer of 1968, were all analytically derived. Clearly a more accurate analysis method needs to be developed. At the same time, more effort is warranted in the development of a less sensitive, yet high-performing TVC subsystem.

5.0 ATTITUDE CONTROL SUBSYSTEM

This section discusses the SCS attitude control subsystem (ACS). This subsystem provides the backup attitude flight control capability for the spacecraft during all mission phases except entry and thrusting of the service propulsion system engine. The subsystem may be operated in either the automatic mode or the manual mode. Propulsive force is provided by 16 hypergolic on-off engines, and low-limit cycle rates are maintained by pseudo rate feedback.

Low-limit cycle rates for navigation sighting requirements have been the most difficult requirement to satisfy. The problem has been that of obtaining small thrust pulses from the thrusters without damaging the engine. Another problem was the maintenance of thermal control of the spacecraft through continuous rotation with a minimum of fuel.

SUBSYSTEM DESCRIPTION

The ACS is contained within the stabilization and control system. It is composed of the electronics necessary to accept command signals from the rotation and translation hand controls, rate and attitude error signals from the attitude reference subsystem, and configuration switching signals from the main control panel. The ACS causes the service module reaction jets to fire in such a manner as to control vehicle motion.

Functions

The ACS provides the following general functions as a backup in case of failure of the primary control system or in those instances when it is desired to shut down the primary system:

1. Hold spacecraft attitude within a selectable deadband using error signals from the ARS.

2. Provide for manual control of spacecraft attitude in the following configurations:

a. Proportional rate commands

b. On-off acceleration commands to the RCS solenoid automatic coils

c. Minimum impulse commands from the rotation hand control (R / C) to the RCS solenoid automatic coils

d. On-off acceleration commands from the R / C direct switches to the RCS solenoid direct coils

3. Provide for manual translation commands in six directions from the translation hand control (T / C)

4. Provide for automatic rate stabilization of the vehicle

5. Provide for manual ullage commands to either the automatic or direct RCS solenoid coils

6. Provide override logic for compatibility between automatic and manual operation (astronaut direct commands take precedence and cause appropriate automatic functions to be inhibited)

Mechanization

A simplified single-axis functional block diagram of the ACS is given in Figure 5-1. Figure 5-2 depicts the ACS thruster arrangement. With reference to Figure 5-1, the operation of the ACS may be described as follows:

A rate error signal is formed as the difference between the proportional rate command from the R / C and the rate gyro signal from the ARS. The attitude error signal from the ARS is processed through a selected minimum or maximum deadband and summed with the rate error signal to form the total error to the switching amplifier. When the magnitude of this error signal exceeds a fixed threshold, the switching amp output is turned on (the operation of the pseudo rate lag is described later in this section). The output of the switching amp, after proper routing by the driver selection matrix and amplification by the RCS driver amplifiers, is used to actuate the automatic coils of the RCS solenoids in an on-off fashion. The output of the

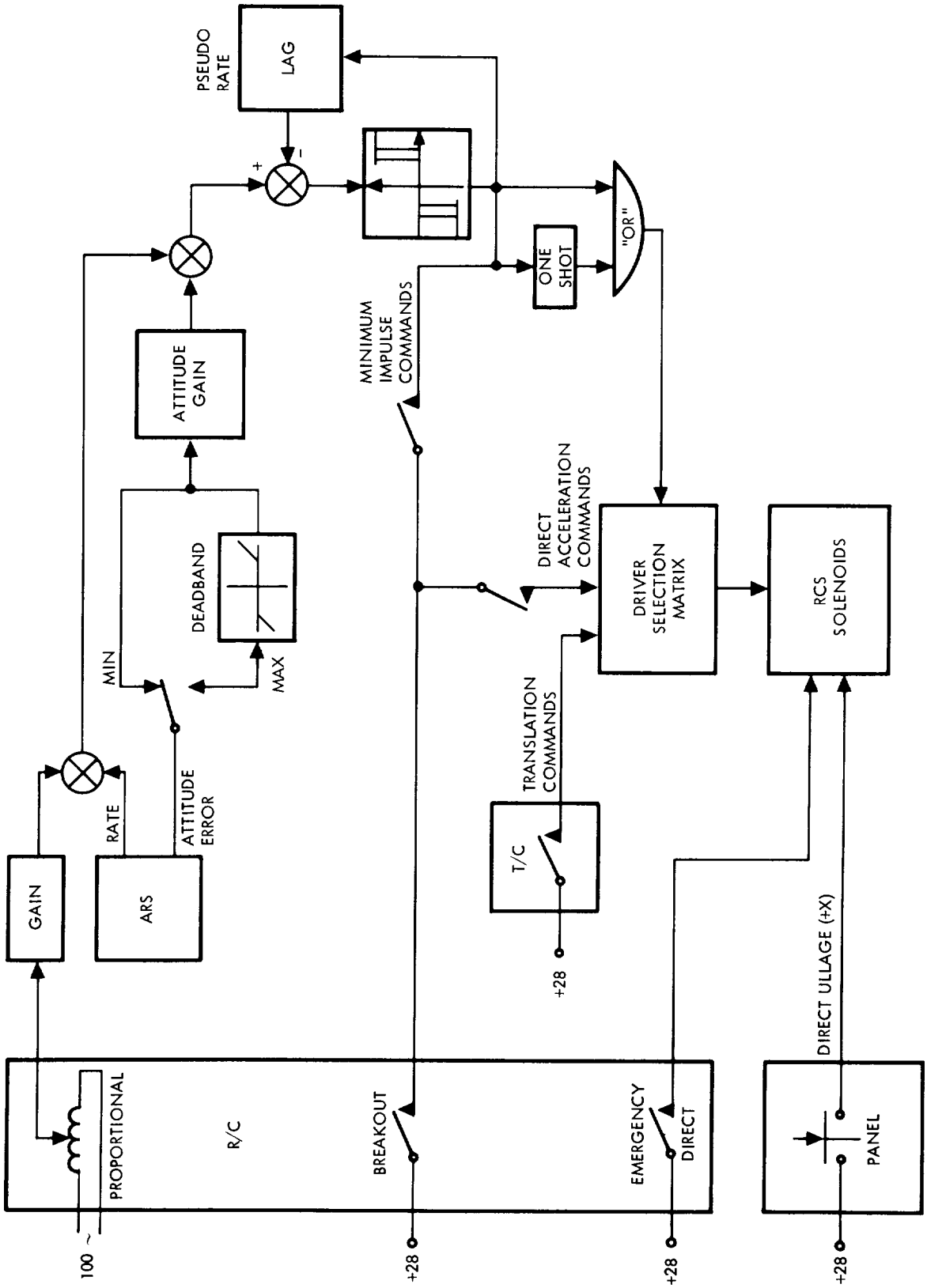

Figure 5-1. ACS Functional Diagram

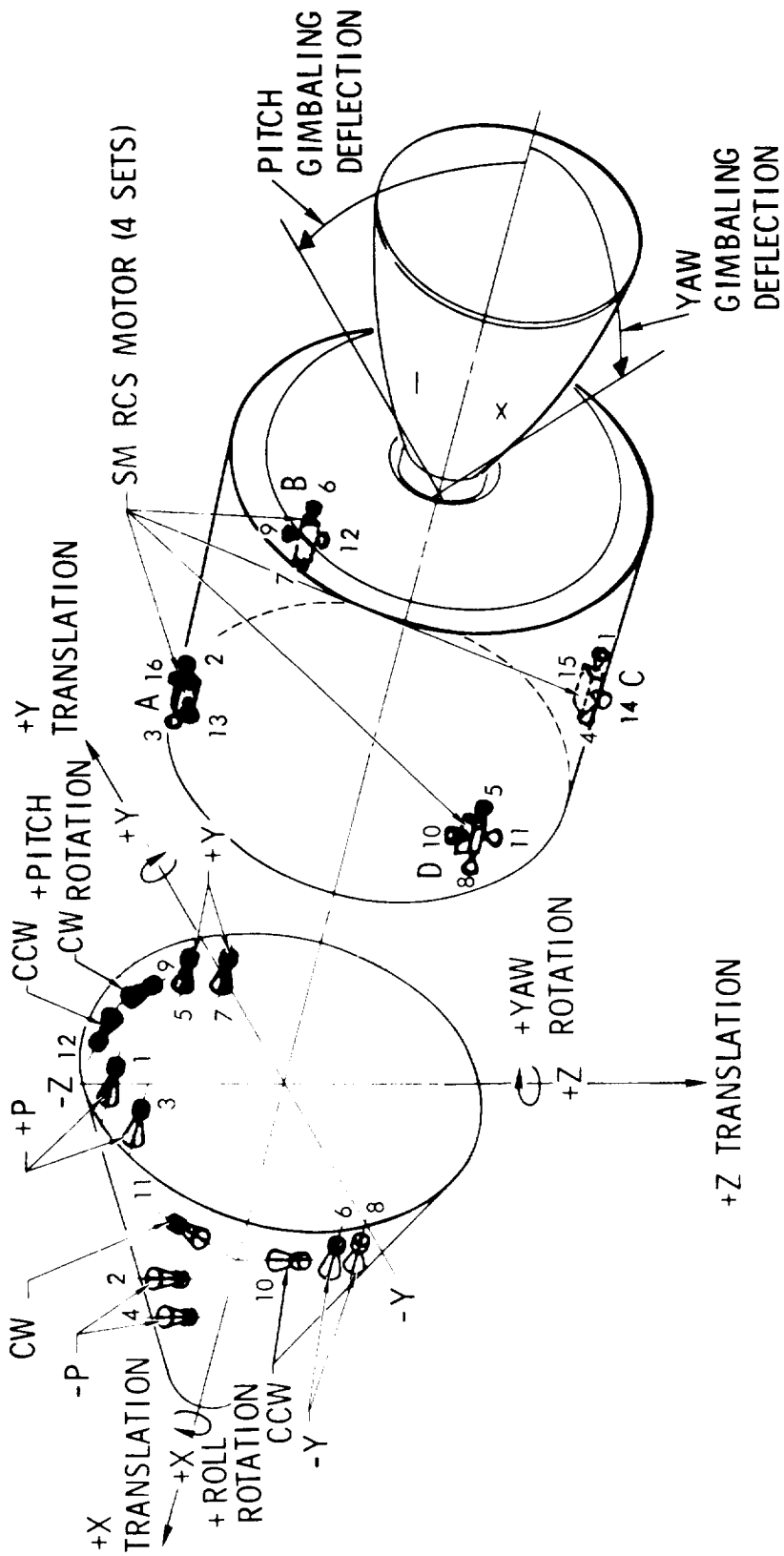

Figure 5-2. Thruster Orientation

108RE14151

switching amp is also used to trigger a one-shot whose output is used in a logical "or" function to limit the minimum duration of RCS commands. This one shot may also be triggered by 28-volt signals from the breakout switches of the R / C when minimum impulse commands are required. The driver amplifiers may also be enabled to accept these breakout signals as direct on-off acceleration commands from the astronaut. Translation commands from the T / C are also simultaneously processed by the driver selection matrix and used to command the appropriate RCS jets. (No priority is given to either rotation or translation commands and the simultaneous occurrence of these commands can cause opposing RCS engines to fire.)

All the above commands cause actuation of the RCS solenoid automatic coils. There is another coil co-wound on each solenoid designated the "direct coil." This coil is actuated by direct 28-volt commands from either the direct switches of the R / C or by the direct ullage panel switch. (Commands to the direct coils are given priority and cause the automatic coil commands to be inhibited.)

Design Features

There are two features of the ACS which have received considerable attention during the design of the system and are therefore considered interesting enough to be pointed out separately here. The first is the nature of the reaction jets themselves. These engines are hypergolic on-off (non-throttleable) engines which use hydrazine as a fuel and nitrogen tetroxide as an oxidizer and attain approximately 100 pounds of steady-state thrust. Sixteen of these engines are mounted on the service module in groups of four (quads) to provide rotational torques in roll, pitch, and yaw, and translational acceleration along the x, y, and z spacecraft axes. Each engine has associated with it two solenoid valves - one for fuel and one for oxidizer - which operate together to provide thrust. The problem of obtaining very low vehicle rates by firing these engines for short durations, while at the same time avoiding a mismatch of fuel-to-oxidizer mixture ratio which might result in combustion instability and destructive detonation of the engines, has been a difficult and continuing problem. It is by far the biggest technical problem encountered in the design of the ACS and one that has not been completely solved to this day.

A second interesting feature of the ACS is the use of a "pseudo rate" feedback to modulate the pulsing of the RCS engines. Although often misunderstood by persons not initimately familiar with the functional design and performance analysis of the ACS, it has received a great deal of attention in the design and analysis of the system and its operation has weighed heavily in many tradeoff studies. The operation of the pseudo rate feedback is basically, as its name implies, to derive some sort of rate information for

use when the conventional rate information is not available or suitable. This may be the case when the rate gyros are intentionally shut down to conserve power or increase reliability (a feature made possible by pseudo rate) or for operation below the threshold of the rate gyros. Conventional rate information is not suitable during the transport lag of the reaction jets or the ACS rate loop lag. In order to provide minimum impulses, pseudo rate is used to shut off the switching amplifier command to the reaction jets before any detectable thrust has been produced.

DESIGN REQUIREMENTS

This section describes the constraints, requirements, and ground rules used to define the performance of the present Block II ACS. In most cases the present requirements differ considerably from the original requirements and many have evolved with system design. Some of the requirements and constraints are still being changed.

Requirements

The following data summarize the ACS parameters and their defining requirements.

Parameter	Value	Requirement	Remarks
Minimum attitude deadband	0.2°	0.2°	0.5° accuracy required for ΔV orientation
Maximum attitude deadband	4.2°	4.2°	Roll control during ΔV and attitude hold. Propellant minimization
Rate deadband	0.2°/sec	0.2°/sec	
Rate to attitude gain	1°/sec	1°/sec	Propellant minimization
Automatic limit cycle rate	0.05°/sec	0.1°/sec	Mechanization allows same automatic rate as manual rate
Manual minimum impulse rate	0.05°/sec	0.04°/sec	Specification change notice in process to alleviate the requirement

In addition to these requirements, the minimum value of the electrical pulse width to the RCS engines is constrained by a "safe operation" value.

This requires an electrical pulse to the RCS engines to be greater than the pulse width (PW) defined by

$$PW = 25.5 - \frac{1}{2} V$$

where

PW = pulse width in milliseconds

V = valve supply volts

Tradeoffs

The ACS was initially conceived as the primary control system for nonthrusting and nonatmospheric entry phases of the Apollo mission (i.e., all free-fall phases including earth orbit, translunar midcourse, lunar orbit, and transearth midcourse). The purpose of the ACS was to allow the astronaut to maneuver the vehicle about all three axes, to hold attitude about a given reference, and to stabilize the vehicle to low angular rates. In addition, the ACS was to provide roll-attitude control during thrusting maneuvers.

The initial design tradeoff studies were primarily concerned with system configuration and were performed before specific mission requirements were defined. The configurations considered were chosen to allow flexibility for change of parameter values as mission requirements become firm.

A ground rule for all initial decisions was to use only state-of-the-art devices where possible. For this reason on-off (nonthrottleable) reaction jets were chosen as control devices and the ACS was necessarily configured as an on-off control system. The primary tradeoff consideration was therefore given to the method of modulating the on-off control of the reaction jets. For the purposes of these tradeoffs, certain assumptions were made regarding other elements of the SCS system, namely:

1. Rate and attitude sensors will be provided for other functions (such as thrust vector control) and these sensors will be available for use by the ACS.

2. It may be desirable to shut off the rate sensors to conserve power.

3. The attitude sensor will provide a signal that is usable for deriving rate information.

4. The smallest rate change required will be greater than that produced by the minimum impulse bit of the reaction jets.

5. Translation commands will be manually commanded on-off signals which require no signal processing other than jet selection.

6. The primary function of the ACS is to provide low residual rates and good fuel economy during attitude hold limit cycle and maneuvers.

The most difficult requirement to meet was that of achieving low-limit cycle rates. The actual requirement for navigation sightings was not known, but it was assumed that obtaining a single minimum impulse limit cycle was required. The simplest possible system, the normal on-off limit switching system, is not capable of producing a minimum impulse limit cycle; the final limit cycle rate of such a system is a function of the following parameters:

1. Reaction jet minimum impulse rate change

2. Rate sensor threshold

3. Rate sensor lag due to filter and other time constants

4. Reaction jet transport lags

5. Switching hysteresis of on-off switch

6. Ratio of rate to attitude gain

7. Vehicle inertia

In addition, this simple system is not stable in the absence of rate information so that some sort of derived rate must be used when the rate gyros are shut off.

It is therefore necessary to use some sort of pulse modulation or other device to minimize or eliminate the effect of parameters 2 through 7.

A tradeoff study was conducted which considered four separate pulse modulation systems to provide this function. Two of these systems are conceptually quite similar but mechanized differently. The four systems are:

1. Pseudo rate

2. Error pulsing mechanization A

3. Error pulsing mechanization B

4. Pulse width and frequency modulation

The basic concept of pseudo rate is to take the output of the switching amplifier which, as an on-off command to the jets, may be considered a pseudo acceleration signal and integrate it to obtain pseudo rate information. In practice, a first-order lag is used rather than an integrator for simplicity of mechanization, and this is quite usable over a limited range. Pseudo rate will provide stability within this range and convergence to a single minimum-impulse limit cycle, completely eliminating the effects of hysteresis and lags.

The error pulsing concepts are designed to produce pulses as a function of the error signal for a limited pulsing region. The pulses are sized so that the control loop is stable within a limited region using attitude information alone, and will converge to a single minimum-impulse limit cycle. In mechanization A, the error levels at which pulses occur are at fixed intervals, and the pulse widths are functions of the error at the start of the pulse. In mechanization B, the error levels at which pulses occur are at fixed intervals above the error when the previous pulse terminated; and the pulse widths are a function of the error at the moment of pulse termination.

The pulse width and frequency modulation system generates pulses whose duration and repetition rate are both functions of the error signal. A simple mechanization was chosen which made the pulse duty cycle proportional to the error signal. This design was not based on the desire to achieve angular acceleration proportional to the error signal as in linear systems, but to simply achieve the two end conditions of high acceleration when needed and low average acceleration when approaching limit cycle to eliminate the effects of lags. This system did not generate pulses which produced stability without rate information as did the others. Thus, it required a rate gyro or derived rate at all times. This was not considered a handicap since the pulsing system was designed to eliminate the lags inherent in derived rate by making the pulse rate function such that the slowest pulse rate had an off time long enough for the rate sensing lag to disappear. However, it was discovered that convergence to a single (rather than multiple) minimum impulse limit cycle was a function of rate-to-attitude gain and vehicle torque-to-inertia ratio and that for some of the parametric torque-to-inertia ratios considered, a moderately high rate-to-attitude gain was required. In view of the unknown noise characteristics and the necessity for derived rate, this rate-to-attitude gain requirement was considered a handicap.

For the tradeoff study, pencil and paper studies and analog computer simulations were performed and a single-axis breadboard of each system was constructed and tied into the analog simulation. The following data give the tradeoff criteria used and the relative weighting factors.

Weighting Points	Criteria
100	Performance: Ability to provide lowest limit cycle rate Ability to provide best attitude accuracy Ability to provide rapid convergence Good control under steady and varying disturbance torques Propellant consumption Authority for large errors
130	Adaptability: Ability to compensate for changes in sensor outputs and jet performance Ability to compensate for partial failures of sensors or jets Ability to accept changes in control parameters Compatibility with different mission modes
200	Reliability: Parts count Number of solenoid actuation cycles
30	Mechanization: Weight Power Volume

Since the weighting factors used in these data are arbitrary, a great deal of care must be used in their interpretation. Reliability was considered of major importance since the system was the primary control path. Adaptability was also rated quite high since most requirements had not yet been specified or determined. Lesser emphasis was placed on performance since each system was capable of meeting the basic performance requirements that were known, and the performance criteria were essentially those which exceeded the requirements. The least emphasis was placed on mechanization since these were only breadboards, and the prototype system could differ radically in mechanization.

The evaulation ranked the four concepts in the following order:

Pseudo rate	413 points
Error pulsing B	350 points
Pulse width and frequency modulation	300 points
Error pulsing A	220 points

The fourth-ranked error pulsing concept A was discarded on the basis of a poor rating in reliability and adaptability. This mechanization, even considering possible refinements to the breadboard, was the most complex and least adaptable.

The pulse-width and frequency-modulation system, which ranked third, was discarded for poor performance and adaptability. The low rating in performance resulted from the requirement for derived rate together with a high-rate gain and the necessity for a noise filter. A very low minimum pulse rate was required to eliminate the time-lag effects. With these conditions, analytical studies and computer simulations showed that rapid convergence with fuel economy were difficult to achieve following a maneuver. It was found that to achieve good convergence to a single pulse limit cycle would impose an increased design restriction on deadband, rate-to-attitude gain, etc. With restrictions imposed in these areas, any further changes would prove difficult to accept; thus, the concept was graded low in adaptability.

The final choice between pseudo rate and error pulsing B favored the former because the circuit simplicity provided a higher predicted reliability. Comparison in performance and adaptability showed that each was equally acceptable. Thus, with reliability a heavy weighting factor, pseudo rate achieved the highest score and was selected for mechanization.

The attitude sensors considered in the preceding discussion were always available to the ACS for purposes of control. These were assumed to be proportional sensors — generally inertial-type instruments. In the original concept, however, the ACS was designed to operate not only with the G&N platform and the SCS rate integrating gyros as attitude sensors, but also with a sun sensor and a horizon scanner. These sensors arose from a requirement for thermal attitude control with reference to the sun and from a requirement for local vertical hold. These requirements were changed, however, and all noninertial sensors were deleted early in the design of the ACS.

It should also be noted here that early mechanization considerations were based on dual reaction jet systems, a 100-pound thrust system, and a 5-pound thrust system. A jet select logic was also incorporated into the ACS for purposes of propellant economy — rotation commands were given precedence over translation commands because it was thought that rotation corrections would be automatic in nature and of short duration during periods of astronaut-produced translation commands.

PROBLEMS AND CHANGES

Problems

This section discusses the problems encountered in the development of the attitude control subsystem. The problems described are those of minimum impulse, passive thermal control, arc suppression, and switching. Final solution to the first two problems still awaits further development, although there have been no corresponding flight problems, whereas the last two have been successfully resolved.

Minimum Impulse

The Apollo vehicle was originally designed (in the lunar-landing configuration) to include two sets of service module reaction jets — 100-pound-thrust hypergolic engines and 5-pound thrust compressed cold gas engines. The 100-pound thrust engines were originally sized to provide adequate roll control during boost from the lunar surface when large roll disturbance torques were created by the ascent propulsion system. The 5-pound jets were designed to provide vernier control for low-rate-limit cycle operation and for stability during navigation sightings. Before the navigation sighting rate requirement was known, it was estimated that convergence to rates of about 0.0033 deg/sec (0.2 $\widehat{\text{min}}$/sec) would be required. The first written requirement for navigation sighting rates was actually an order of magnitude greater than this — 0.033 deg/sec (2 $\widehat{\text{min}}$/sec). Both these requirements were within the known minimum impulse capability of the 5-pound jets.

With the advent of the lunar orbit rendezvous concept, the Apollo vehicle was no longer required to land on the lunar surface; and a vehicle redesign took place. Two recommendations were made at this redesign (1) eliminate the 5-pound jet system to save weight and reduce complexity, and (2) lower the thrust level of the hypergolic engines to 50 pounds which would be adequate to meet all requirements. Recommendation (1) was accepted and the 5-pound jet system was eliminated. Recommendation (2) was not accepted because it would mean a slip in schedule, an increased cost for engine redevelopment, and the possibility of development problems occurring in the design of the lower thrust engines. It was felt that the navigation sighting rate requirement could be satisfied with 100-pound engines since the engine manufacturer believed the engines capable of producing impulses less than one pound second (in the worst case axis - roll, with a moment of inertia of about 12,500 slug feet squared, a one-pound-second impulse with a moment arm of 7 feet would produce a rate change of less than 0.033 deg/sec).

At this time no small pulse altitude chamber test data were available for the reaction jets but extrapolation of sea-level tests indicated that the small pulse operation would be satisfactory. Because of the scarcity of small-pulse data and the uncertainty of the sea-level-to-altitude extrapolation, the ACS mechanization incorporated a closed-loop sensing device which operated as follows: each reaction jet solenoid valve consisted of two coils wound on the same core—an automatic coil operated by the control system, and a direct coil operated by the astronaut's hand control. When the automatic coil was energized, transformer action induced a voltage in the direct coil. A sharp change in this voltage occurred when the poppet actually moved, and this change was sensed by a special circuit. This circuit was used to latch the voltage on the automatic coil until the valve was actually opened or 20 milliseconds had elapsed, whichever occurred first. Thus, a short pulse to the automatic coil would produce a minimum impulse from the engine independent of supply voltage, valve temperature, etc.

A design review of the minimum impulse mechanization was subsequently held at which time it was decided that the closed-loop mechanization was unnecessarily complex and adversely affected reliability. The lack of adequate small pulse data was pointed out and while it could not be shown that a closed-loop system was required based on the available data, it was recommended that the closed-loop approach be maintained at least until more definitive small pulse data could be obtained. The decision resulting from the meeting however, was that the closed-loop mechanization be deleted and that an open-loop system be designed which was less complex. A cursory study to determine the required tolerance for an open-loop pulse to meet the navigation sighting requirement under the effects of estimated parameter variations was made using the only available test data (which was taken from a single engine). This investigation revealed that

a pulsewidth was required that was always greater than 12 milliseconds and always shorter than 11.8 milliseconds if a single precise pulse width were to be used. Obviously, this was not possible. The navigation sighting rate requirement was, therefore, relaxed to 0.04 deg/sec on a tentative basis.

At this point the engine manufacturer began small-pulse altitude chamber testing, and more data began to become available. However, an engine development problem appeared in the nature of a destructive explosion of the engine which occurred during small pulse testing, and the test program was delayed while this problem was investigated. The explosion problem cause was never clearly determined, although it seemed to involve mixture ratio mismatch and evaporative cooling effects caused by tolerances in the operation times of the fuel and oxidizer valves at small pulse widths. Nevertheless, an engine redesign took place and a "minimum safe pulse width" constraint was placed on the minimum impulse mechanization.

Several open-loop pulsing system designs were investigated and, of these, only two were capable of meeting the rate requirements. The first, a precision (±4 percent) one-shot gave marginal performance, and was rejected because of concern for the inadequacy of the test data. The design that was chosen incorporated a one-shot to "latch" the automatic coil for a minimum "on" duration which is a function of supply voltage: the lower the supply voltage, the longer the pulse duration. This mechanization effectively eliminated the variation in impulse due to variations in supply voltage and is the design that is presently incorporated.

It had been assumed that the engine redesign had cured the explosion problem. This year, however, the explosion problem reappeared in testing the lunar module engines which are identical to the Apollo engines, but use a different fuel. It is felt that the different propellant will prevent a similar problem with the SM engines and tests are now under way to verify this.

Thermal Control Problem

A means of obtaining an approximately even solar thermal input to the spacecraft during translunar and transearth midcourse flight is required while still maintaining a desired attitude for uninterrupted earth communications. The thermal requirement is that the angle between the spacecraft YZ plane and the sun line not exceed 20 degrees for any appreciable part of the time. A spin-stabilized thermal cycling mode is planned to satisfy this requirement and maintain the desired attitude for the duration of thermal control (which may be as long as several days in the lunar-landing mission).

Spin stabilization is achieved by rotating the spacecraft about its longitudinal (roll) axis and then disabling all further control. There are several reasons why this type of spin stabilization might exceed the angular pointing requirements.

First, it may not be possible to start the roll motion smoothly. This is influenced by such factors as (1) inertia cross products, (2) residual pitch and yaw rates, (3) propellant sloshing, (4) aerodynamic torques, and (5) other disturbing torques such as rotating machinery, steam venting, crew motion, earth's magnetic field, etc. The greatest problem regarding vehicle attitude constraints is maintaining the spin motion. In order to achieve an even thermal cycling, it is necessary to spin the spacecraft about the roll axis at a rate of about one-fourth degree/second, which requires about two to three minimum impulses from the roll reaction jets. However, a disturbance in pitch corresponding to only one-half of one minimum impulse (producing a pitch rate of about 0.007 deg/sec) would cause a wobble angle of greater than 10 degrees. A second problem is the presence of energy dissipation. The spin motion about the smallest moment of inertia axis (roll), which is normally stable for a rigid body, is not stable in the presence of energy dissipation. In the Apollo vehicle, the propellant motion in the tank is considered the largest energy sink and is the cause of a large anticipated growth in the wobble angle. The effects of initial vehicle rate and attitude errors, slosh mode parameters, and initial position of the sloshing mass, and disturbance torques all contribute to the growth of the wobble angle.

Recent studies using a closed-loop, six degree-of-freedom digital simulation with low g propellant sloshing have shown wobble angles in excess of 20 degrees in less than 20 minutes after starting spin-up with initial pitch and yaw rates as low as 0.009 deg/sec. Clearly, these results would indicate that thermal control will be very difficult if not impossible to achieve by spin stabilization, and no other method of thermal control has been found that is acceptable in terms of propellant consumption and control system duty cycle. A thermal redesign of the spacecraft structure would seem to be required in light of the above discussion. No such redesign is anticipated, however, since there is a very low confidence in the validity of the low energy, low g slosh model as applied to the problem of roll-spin stabilization. This model has produced some physically unreasonable results in digital simulations, and predictions based on it have not been confirmed by any of the previous Apollo flights. A special test is planned for spacecraft 101 (Apollo 7) to determine the characteristics of low g propellant slosh. This test is designed to determine the characteristics of a higher confidence level slosh model and the feasibility of spin stabilization. If this test should demonstrate, however, that spin stabilization is not feasible, some alternate solution (presently unknown) to the thermal problem must be found which fits within the allowable budget for RCS propellant consumption and control system duty cycle.

Arc Suppression of RCS Solenoids

Associated with each RCS engine are two solenoid valves — one for fuel and one for oxidizer. Each of these valves represents a highly inductive load drawing several amperes. Protection of the driver amplifiers required that arc suppression circuitry be provided to limit the voltage spike which appears across the output stage of the amplifier when the automatic coil of the valve is turned off. Any arc suppression or voltage limiting placed across the coil will, of course, increase the drop-out time of the valve and thereby increase the minimum impulse of the engine. The arc suppression circuitry was therefore designed to limit the voltage spike to the highest value that could be tolerated by the driver amplifier. A simplified version of this arc suppression circuitry is shown in Figure 5-3. No problems occurred with this circuit and, given the required limiting voltage, the attendant drop-out delay has to be considered part of the minimum impulse.

Arc suppression of the direct coils, on the other hand, did prove to be a problem. The direct switches in the rotation control need protection against arcing and the limiting voltage had to be lower than used on the automatic coil. It was determined that the limiting voltage could not be greater than 20 volts. The problem with this was that the direct coil arc suppression allowed energy storage not only for operation of the direct coil, but also for the automatic coil. The resulting lag in the automatic coil drop-out was unacceptable from the standpoint of minimum impulse. It was at first decided to place the arc suppression circuitry up-stream of the direct enable switch. It would, therefore, be across the coil only when the direct system was enabled and have no effect on the automatic coil when the direct system was not enabled. It turned out that this was not an acceptable solution because the astronauts decided to leave the direct system enabled at all times (except if it had malfunctioned) so that it would be immediately available in case of an emergency. As a result, several designs were formulated to remove direct arc suppression when minimum impulse control was required. One such design used relay switching so that arc suppression was incorporated only upon actuation of the direct coil and removed after a fixed time delay had elapsed following removal of the direct command. These designs were all complex and had an adverse effect on reliability.

It was a fortunate circumstance that the RCS solenoids were undergoing a redesign at this time and the direct coil characteristics were designed so that they could be wired in series. By wiring the direct coils in series rather than in parallel and in such a manner that the phases were opposing, the mechanization shown in Figure 5-3 was possible. With this mechanization, the induced effects cancelled, and deterioration of the minimum impulse was negligible.

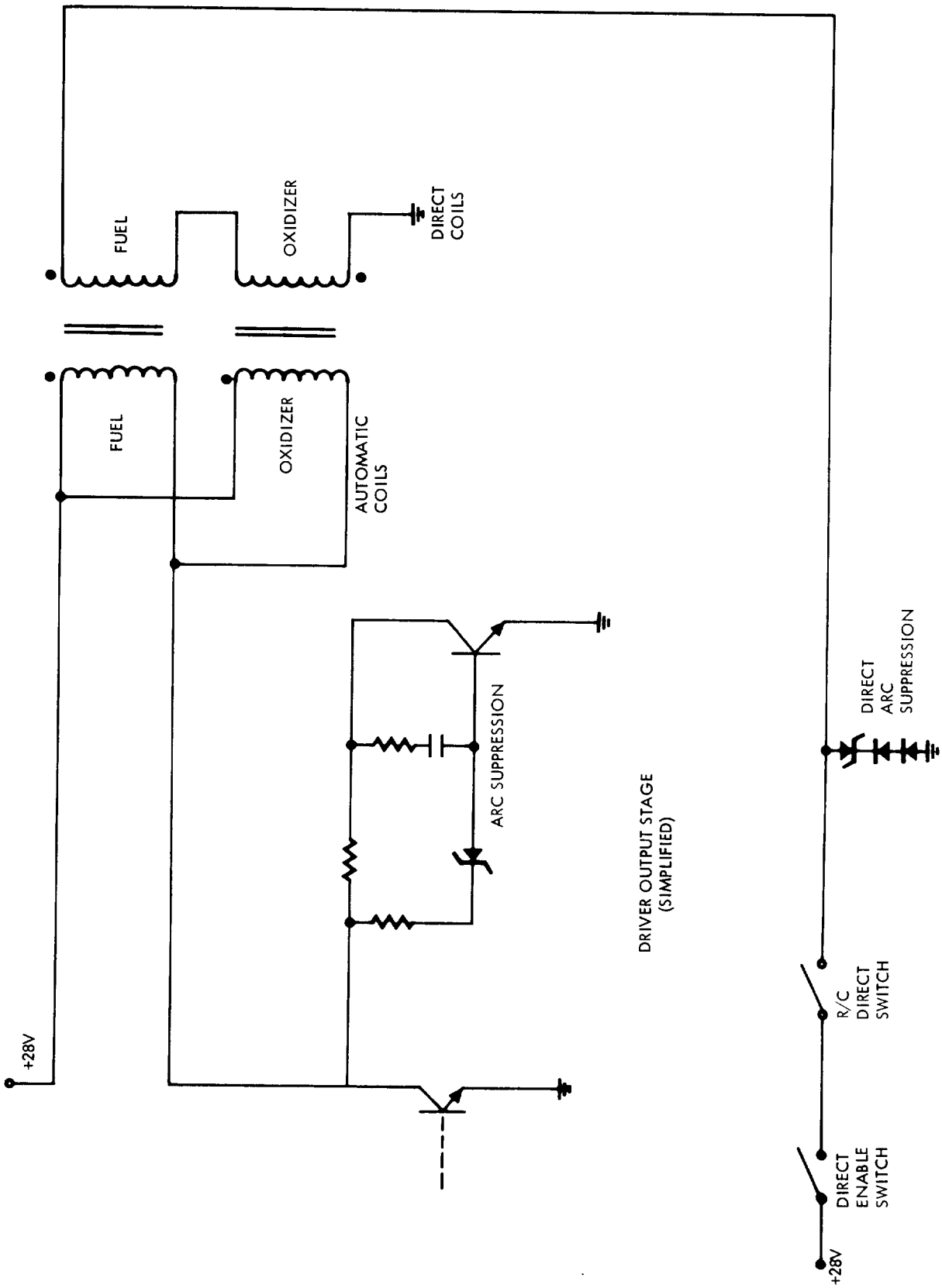

Figure 5-3. Arc Suppression Mechanization

Switching

Early tradeoff studies were made between "hot side" and "ground side" switching of the RCS solenoids. The basic objection to ground-side switching was the fail-safe criterion. A considerable length of wire exists between the driver amplifiers in the command module and the jet solenoids in the service module; any of these wires shorting to ground would cause the reaction jets to fail "on" if ground side switching is used whereas if hot side switching is used, the system is relatively fail safe (a short to ground would only cause loss of a jet). In favor of ground-side switching, however, was the fact that at the time of the design the only high reliability silicon transistors available which could handle the currents required for valve operation were NPN devices. To use hot side switching with NPN transistors would have required more switches and a separate power supply. It was considered desirable to use spacecraft dc power directly and ground-side switching was chosen. This decision was made acceptable by the fact that such a failure of the jet could be disabled by shutting off the propellant to a quad (group of 4 jets) by means of a propellant isolation valve. The system was designed to be able to complete its mission with one quad (of four) disabled. No failure of the type described has occurred so far in any of the Apollo flights.

Changes

The only significant functional change made to the ACS was the removal of the jet select logic with the Block II redesign. The purpose of the jet select logic was to resolve conflicts between rotation and translation commands to the jets. Since the same jets were used to provide both rotation and translation, conflict between simultaneous commands could occur. The primary cause of conflict was the offset center-of-gravity location. Translation commands by the astronaut cause both translation and rotation; the vehicle rotational errors were sensed by the autopilot and commands were given to the jets to stop the rotation. This action would have resulted in commands to opposing jets, thereby wasting fuel. The jet select logic resolved this conflict by inhibiting the opposing jets. During the Block II redesign a study was run to determine for a particular mission just how much propellant was saved by the jet select logic. It was felt that the extra propellant was insignificant and that simplification of the electronics was desirable. The jet select logic was therefore removed.

CONCLUSIONS

Since the operation and performance of this subsystem has been entirely satisfactory during the spacecraft flights and developmental problems do not suggest any changes, there are no significant hindsight suggestions.

6.0 ENTRY CONTROL SUBSYSTEM

This section discusses the entry control subsystem (ECS) of the SCS. The purpose of this subsystem is to provide backup flight-control capability to the primary mode of entry. The control system is similar to the reaction control system previously discussed except that it uses the Command Module (CM) reaction jets rather than the service module jets. The system also contains coupling from the roll axis into the yaw axis so as to reduce yaw jet firings when controlling about the roll stability axis.

The development and operation of this subsystem has been free of any major problems. The only problem discussed here has to do with operational procedures to prevent a runaway jet from depleting the propellant supply.

SUBSYSTEM DESCRIPTION

The entry control subsystem is contained within the stabilization and control system. It is composed of the electronics necessary to accept command signals from the rotation hand controls, rate and attitude error signals from the attitude reference subsystem, and configuration switching signals from the main control panel. The entry control subsystem provides on-off commands to the command module reaction jets to control vehicle rotational motion.

Functions

The entry control subsystem operates during two distinct phases of a normal mission: (1) the extra-atmospheric portion subsequent to command-service module separation and prior to sensible atmospheric drag deceleration (0.05 g), and (2) atmospheric entry subsequent to 0.05 g drag and prior to deployment of the recovery system (parachutes). During the first phase, the aerodynamic torques acting on the vehicle are small relative to the CM RCS control torques, and the entry control system is capable of providing a backup to the primary system by accepting rotation hand control commands to maneuver the command module about all three axes. During the second phase, large aerodynamic restoring moments cause the command module to maintain trim angles of attack and sideslip and the entry control system provides only rate damping in these axes while still accepting rotation commands in roll for controlling the aerodynamic lift vector direction

Mechanization

The entry control subsystem provides the same options for manual override as does the attitude control system described elsewhere in this report and uses the same driver amplifiers as does the ACS and the primary control system.

A block diagram of the entry control system is shown in Figure 6-1. This system is functionally the same as the ACS except that pseudo rate is removed (by manual switching), the gains are changed, and roll-yaw coupling is included. The switch configurations are shown in the post 0.5 g positions.

The operation of the system is described in the following paragraph.

The rate signal from the attitude reference subsystem is summed with the rate-command signals from the rotation hand control to form a rate-error signal. After 0.05 g switching, the yaw rate error term has coupled to it the sensed roll rate multiplied by a tangent α gain - the α used is the design trim angle of attack. The purpose of this coupling is to minimize yaw jet firings which would be commanded in an attempt to reduce body yaw motion to zero rates. This is not desirable in the presence of roll commands since the aerodynamic stability is achieved about axes other than body axes, thereby forcing yaw rates. Propellant is saved by minimizing these yaw firings, and allowing the yaw rates which would be produced by commanded roll motion. Attitude error signals prior to 0.05 g switching are processed through a selectable deadband and added to the rate error signal to form a total error. These attitude error signals are removed subsequent to 0.05 g switching. When the total error signal exceeds a fixed threshold, the driver amplifiers are turned on in such a manner as to cause the command module reaction jets to fire and reduce the error signal. This type of control is a typical limit switching system which provides rate damping and attitude hold.

The command module reaction jets used for vehicle control are composed of two redundant sets (systems A and B) of six engines each. These engines are on-off or pound-thrust ablatively cooled hypergolic reaction jets using hydrazine as a fuel and nitrogen tetroxide as an oxidizer.

DESIGN REQUIREMENTS

This section describes the constraints, requirements, and ground rules used to define the performance of the present Block II entry control subsystem. In most cases the present performance requirements differ from the original requirements in magnitude - but in no case are they restrictive.

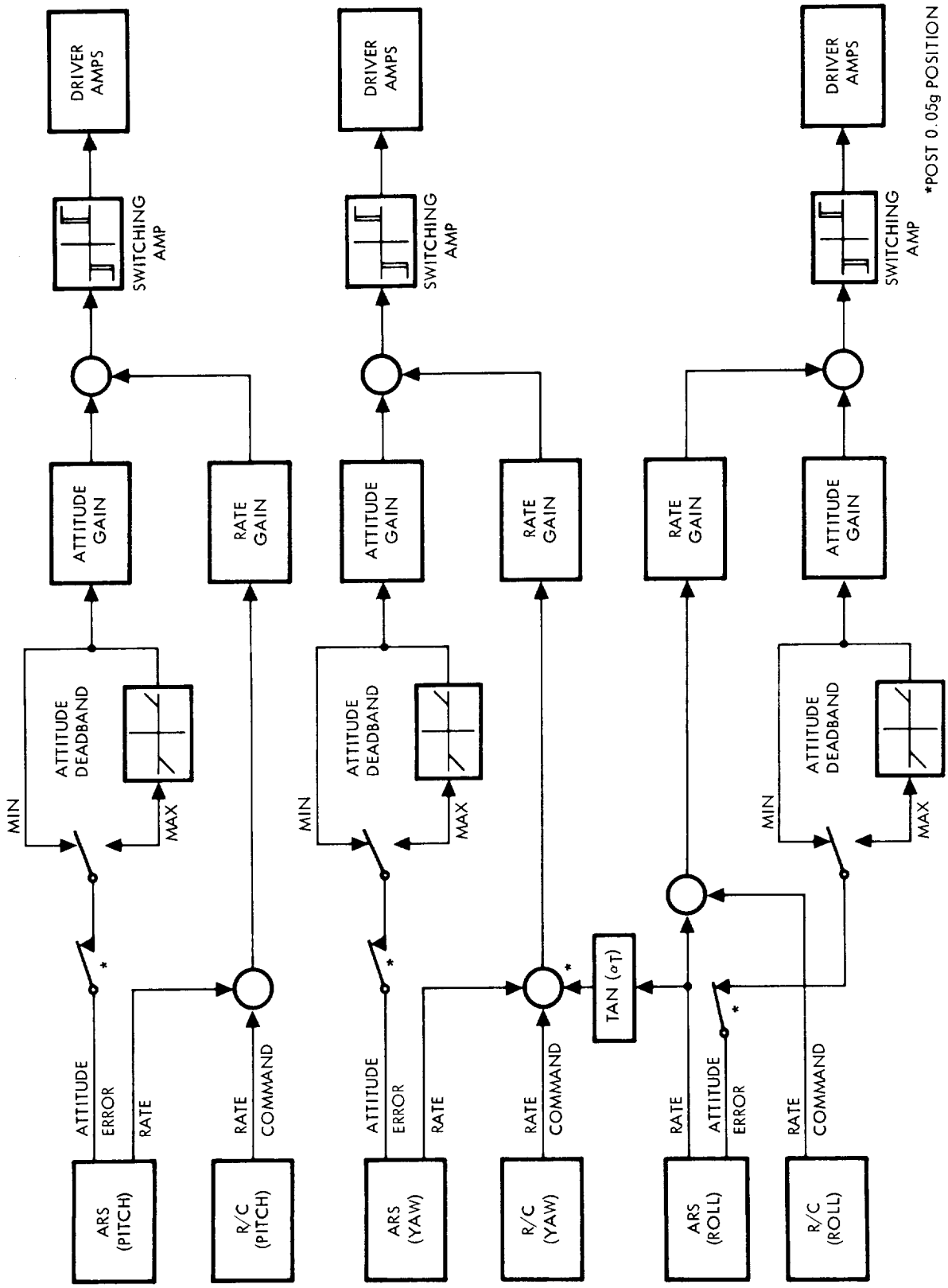

Figure 6-1. Entry Control Functional Diagram

Requirements

The entry control subsystem must be capable of holding vehicle attitude (prior to 0.05 g) in all three axes and must be capable of accepting rotation commands from the astronaut and providing rate damping at all times throughout the entry phase of the mission using a single RCS system (six jets) without running out of propellant.

The following data summarize the entry control system parameters and their defining requirements.

Parameter	Value	Requirement
Rate deadband	2 deg/sec	Propellant minimization
Attitude deadband		
Maximum	8 deg	Propellant minimization and
Minimum	4 deg	attitude hold for preentry
Rate-to-attitude gain	0.5 deg/sec	Propellant minimization
Maximum commanded roll rate	22.5°/sec	Lift-vector orientation

Design Requirement Tradeoffs

The entry control subsystem was initially conceived as the primary control system for the entry phase of the Apollo mission (i.e., that portion of the mission subsequent to command-service module separation and prior to deployment of the recovery system) including the atmospheric entry phase following aborts. The prime function of the entry control subsystem was to provide the capability of executing a safe entry and to adequately control the trajectory so that the command module could be landed at a preselected landing site.

The initial design tradeoff studies were primarily concerned with system configuration. An initial ground rule was to utilize the ACS and service module control system components wherever possible; for this reason, on-off reaction jets were chosen as control devices requiring that the entry system be configured as an on-off control system (nonthrottleable).

The primary tradeoffs were therefore concerned with the methods of switching the jets on and off, the thrust sizing of the jets, and their physical location. For the purposes of these studies, the following assumptions were made regarding the SCS system and entry requirements.

1. Three-axis control is required prior to development of aerodynamic moments

2. Roll control is required throughout entry

3. Command module reaction jets will be used only after separation from the service module

4. Two independent, redundant systems of reaction jets and propellant will be available capable of meeting torque and propellant storage requirements

5. Each RCS system will be capable of being isolated by electrical means and by propellant valves, and failure detection will have to be considered

6. Rate and attitude sensors will be provided for use by other systems (ACS and TVC), and these will be available for use by the entry control system

7. Limit-cycle operation of the jets in pitch and yaw essentially stops once the aerodynamic forces build up. Thus, the minimum-impulse capability requirement is greatly reduced compared to service module requirements.

The earliest tradeoff conducted after choosing an on-off system was that of determining the reaction jet thrust magnitude. The effects considered were:

1. Trajectory Effects: to provide a safe entry and to adequately control the vehicle to achieve a preselected landing site. Two effects were considered, (1) roll angle sensitivity and (2) minimum propellant consumption. Since the lift vector can only be effectively controlled by rolling the vehicle, the entry control system must be able to provide rapid roll response to prevent skipout and excessive g loads and provide adequate ranging. Because a low maneuver roll rate is desired, the response time becomes strictly a function of reaction jet thrust level if the maneuver roll rate is fixed.

2. Aerodynamic Damping Effects: should disturbances produce deviations in the angle of attack and the angle of sideslip, the jets must provide suitable thrust to damp the vehicle rates.

3. Failures: the reaction jet thrust may be critical in the event of certain failures. Thus, single RCS system thrust levels must be

adequate in the event of a system failure. The entry control subsystem may be required to damp large tumbling rates and to reorient the command module from apex forward to aft heat shield forward in high-dynamic pressure environments following aborts.

Thrust levels of 50 to 200 pounds were considered and their performance evaluated with respect to the above conditions (except 3). Under the worst-case simulations performed, all thrust levels investigated were capable of meeting the performance requirements. From a propellant consumption standpoint, the optimum thrust level was about 70 pounds with the values of inertia used in the study. It was also found that propellant economy performance was relatively insensitive to thrust level at the optimum and higher values.

The thrust level of 100 pounds was chosen based on the fact that this value was almost optimum and consideration of the possibility that performance margin might be necessary to offset any future changes (such as inertia increases, etc.). The same value of thrust was chosen for all axes with a view toward economy.

The major factor not considered in this thrust sizing was the requirement for performance following an abort (condition 3). This requirement required turning the command module around in a high-dynamic pressure environment. However, it soon became obvious that none of the thrust levels studied was high enough to overcome the aerodynamic moments once the command module had been captured in an apex forward attitude and that this was not a primary factor to be considered in sizing the jets. Other methods were considered for performing (or eliminating the necessity for) this turnaround maneuver. Before describing the various means of handling this problem, a discussion of the apex forward capture is in order.

The Apollo command module was designed to enter the earth's atmosphere aft end first. The aft heat shield has therefore been designed to accommodate the high heat loads to be expected. The requirement for orienting the command module aft end forward during entry stems from the necessity of deploying the parachutes and jettisoning the boost protective cover (if still on) in a manner compatible with their structural design and to avoid imposing undesirable "eyeballs out" acceleration loads on the crew. During entry from a normal mission, this orientation requirement does not pose a problem. There is sufficient time in a normal mission for the crew to reorient the command module before the dynamic pressure builds up. Following a boost abort, the situation is different. The command module is removed from the boost vehicle by the launch escape system with the apex forward in a possibly high dynamic pressure environment. Since the command module has a stable trim point apex forward if the launch escape system were jettisoned while the vehicle was in stable flight following an

abort, the command module could turn apex forward and the RCS engines would be unable to turn the vehicle around.

Consideration was given to a mechanization of the entry control subsystem so that, in the case of apex forward capture, the system could be made unstable, that is, positive feedback introduced in such a manner as to make the apex forward condition unstable. This would not be a "brute force" approach but, rather, would require several diverging oscillations which would eventually turn the command module around; the feedback would be made stabilizing when the turnaround had been accomplished and would converge to a stable aft heat shield forward attitude. Simulations showed that this type of operation was feasible and well within the reaction jet capability. However, it was discovered that both the primary and secondary attitude references would likely be lost because of vehicle tumbling following a high-altitude abort; and the crew would have to determine vehicle attitude with respect to the flight path through the windows with visual reference to the ground. Because of the time criticality of this maneuver and the uncertain condition of the crew following abort, this approach was rejected. Several other mechanizations were investigated including wings or strakes on the command module apex to eliminate the stable point, but none of these mechanizations was satisfactory over the entire dynamic range of aborts. The final system decided upon utilizes deployable canards on the apex of the launch escape motor. This mechanization effectively imparts the necessary reorientation rates to the command module. The only entry control subsystem requirement is to establish a pitch rate of 5 degrees per second for high-altitude aborts to eliminate a weak launch escape vehicle apex forward trim point that exists for high mach numbers. This function is easily provided by astronaut command since tumbling does not cause a loss of rate reference.

Another early tradeoff study was made to determine whether attitude error signals generated by the guidance system for entry steering should be left in body axis coordinates or transformed to trim axes for use by the entry control subsystem. Studies indicated that, if a yaw jet were to fail in the off condition, the use of trim axes would result in instability which would not be present if body axes were used. However, it was felt that the use of body axes could result in large roll angle errors in the guidance system and, since the entry control system was the primary system and responsible for achieving the desired range capability, it was decided to use the trim axes.

PROBLEMS AND CHANGES

Problems

The only problems encountered in the design of the entry control subsystem were minor in nature and had little impact on the specific design of

the system. Among these, perhaps the most significant was the problem of a runaway jet failure. There are two redundant reaction jet systems used on the command module, and each system has its own independent propellant supply. If both systems are operating in parallel, a runaway jet, if undetected, could completely use up the available propellant in both systems. The loss of propellant before being able to deploy the parachutes would probably result in unrecoverable tumbling of the vehicle and therefore must be avoided. However, there exists considerable doubt as to whether or not an astronaut would be able to detect a runaway jet in pitch or yaw during the high-dynamic pressure environment. These considerations dictate the need for either providing automatic runaway jet detection or for using only a single system at a time. It had been determined, however, that severe wind gusts could be encountered during the terminal phase of entry and, under these conditions, the presence of destabilizing aerodynamic damping derivatives could cause the aerodynamic effects to exceed the control authority of a single RCS system and cause tumbling. While these problems were being considered, however, Spacecraft 009 (Apollo 1) was flown. Evaluation of the telemetry data from this flight indicated that the aerodynamic damping derivatives were not destabilizing, and it was decided to use a single system at a time.

A tradeoff study was also run to determine whether pseudo rate (as described in the ACS section) was desirable for entry operation. The conclusion was drawn that it was desirable from the point of view of propellant consumption during preentry (prior to 0.05 g), but highly undersirable in the presence of large aerodynamic moments. The question was whether to lock out pseudo rate during entry or leave it to the astronaut to make sure pseudo rate is absent, since function switching rather than mode switching had been implemented on Block II. However, it was decided not to provide a lockout since there were numerous switch combinations equally as catastrophic, and it would not be practical to provide a lockout for every one of them.

Changes

The first major change in the entry control system was in early 1964. The cross-coupling gain was changed due to a decrease in the spacecraft lift-to-drag ratio from 0.5 to 0.34. Without the gain change, the expected entry propellant consumption would have doubled.

The second major change occurred at the time of the redesign for Block II. Since the SCS was redesigned as a backup mode, no ranging requirements were imposed on the subsystem. Functional switching was used instead of mode switching, and the interface with the guidance system was eliminated.

CONCLUSIONS

Because of the looseness of the entry control system performance requirements and the conservative design employed, there were no major problems or changes which occurred during its development.

7.0 CONTROLS AND DISPLAYS SUBSYSTEM

This section discusses the control and display subsystem (see Figures 7-1 and 7-2). This subsystem provides the hand controllers, flight instruments, and dial settings necessary for the astronaut to monitor and control the spacecraft during various flight modes. The principal development problem associated with the controls and displays has been fractures in the cabling for the hand controllers. The design tradeoffs between durability, flexibility, and flammability have been so difficult that an advance in the design of flexible cabling may be the final solution and could represent one of the more significant outputs of the spacecraft program.

SUBSYSTEM DESCRIPTION

Functions

The Apollo SCS control and display subsystem provides the following spacecraft control and display functions:

Control Functions

Translation Controller (See Figure 7-3)

1. Provides manual acceleration control of spacecraft (CSM combination only) rectilinear motion in both directions along the three principal axes.

2. Initiates a CSM/S-IVB abort command to the spacecraft mission sequencer via CCW rotation of the controller handle.

3. Transfers spacecraft thrust vector control from the CMC to the SCS via CW rotation of the controller handle.

4. Is capable of simultaneous multi-axis actuation.

Rotational Controller (See Figure 7-4)

1. Provides manual proportional body rate commands or direct angular acceleration, via switch selection, for spacecraft rotational motion in both directions about the three principal axes from breakout switch actuation (1.5 degrees travel from neutral) to the soft stops (10 degrees).

2. Provides manual proportional SPS engine gimbal position control in pitch and yaw during manual thrust vector control.

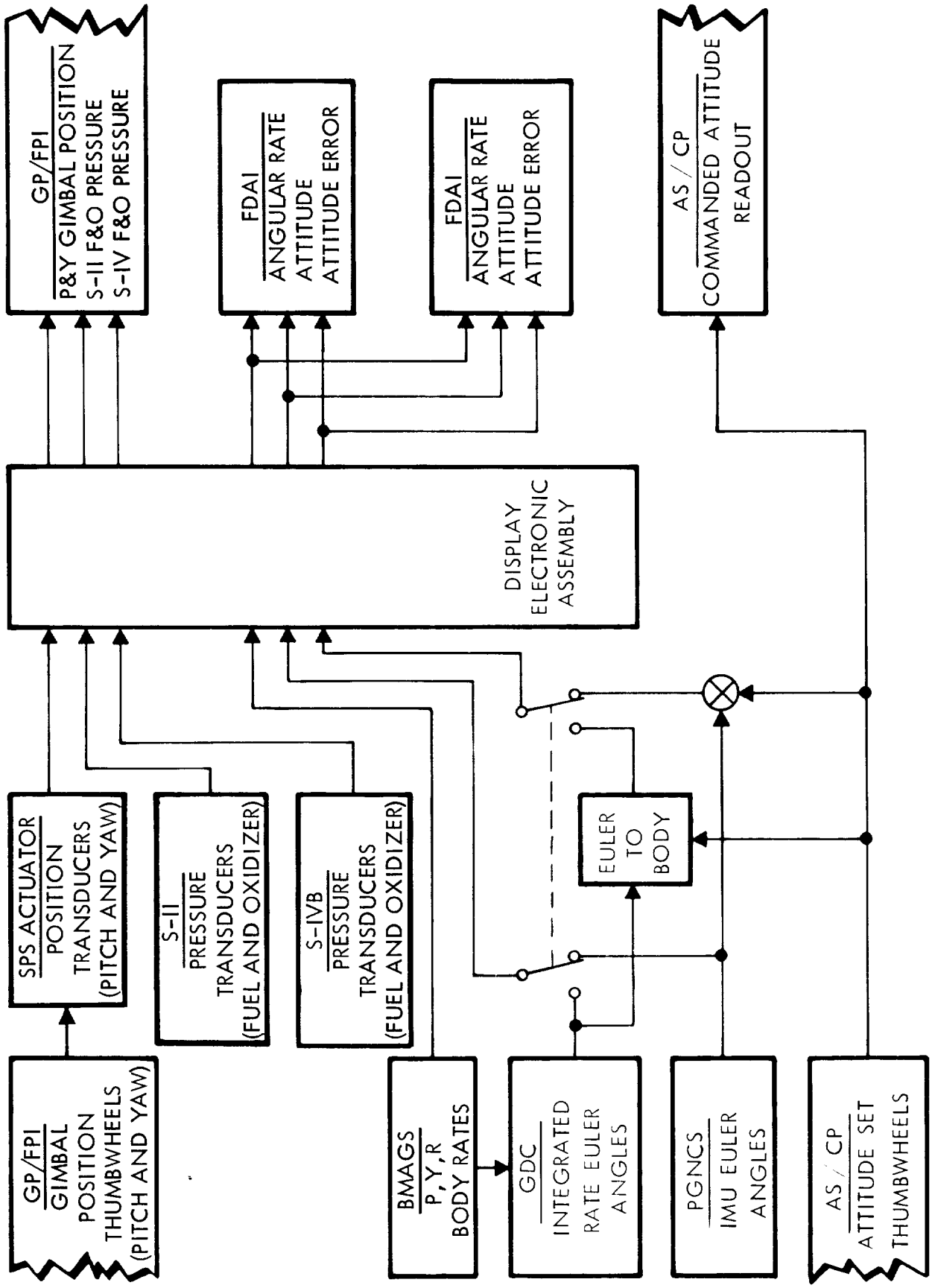

Figure 7-1. Displays Functional Diagram

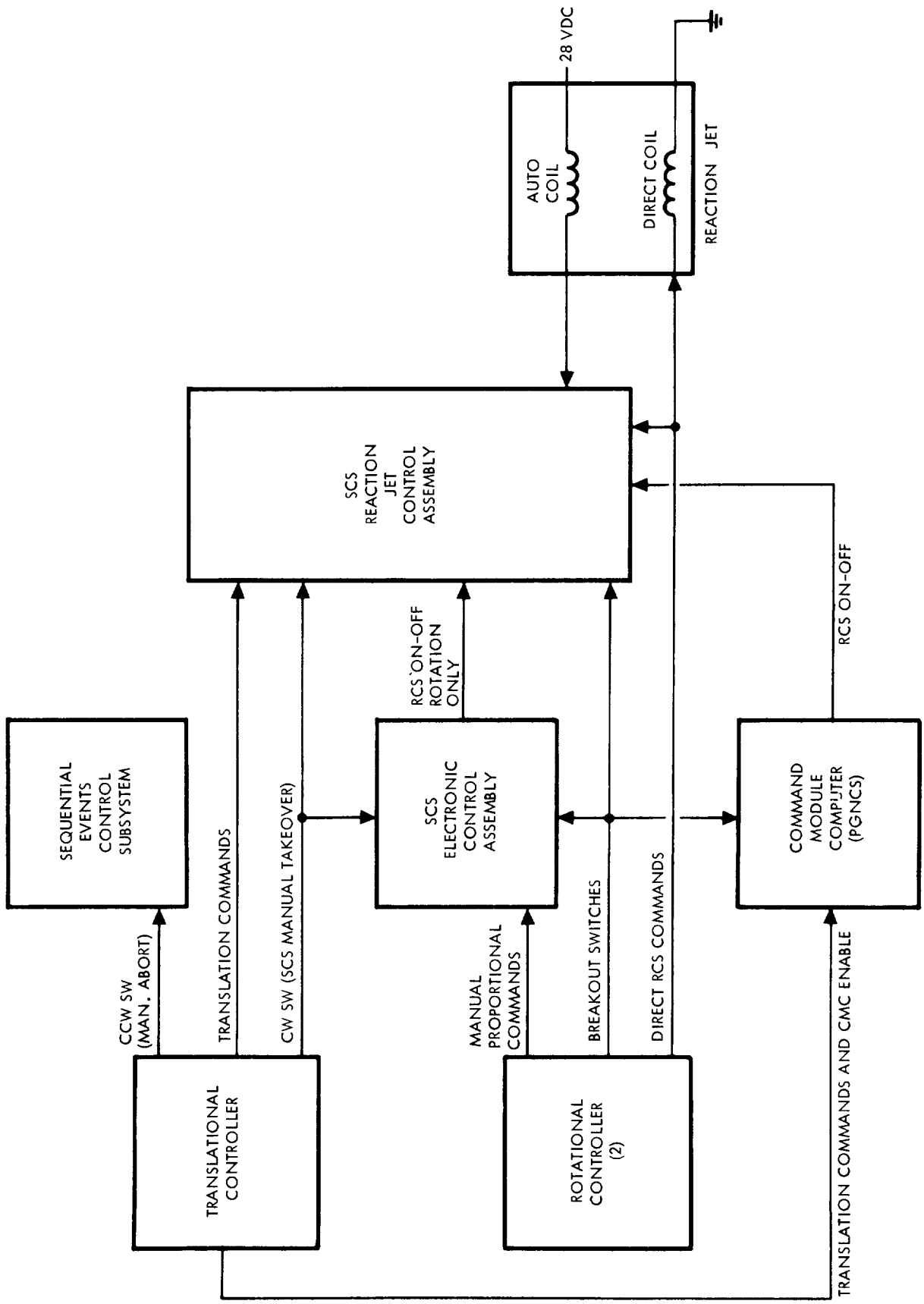

Figure 7-2. Controls Functional Diagram

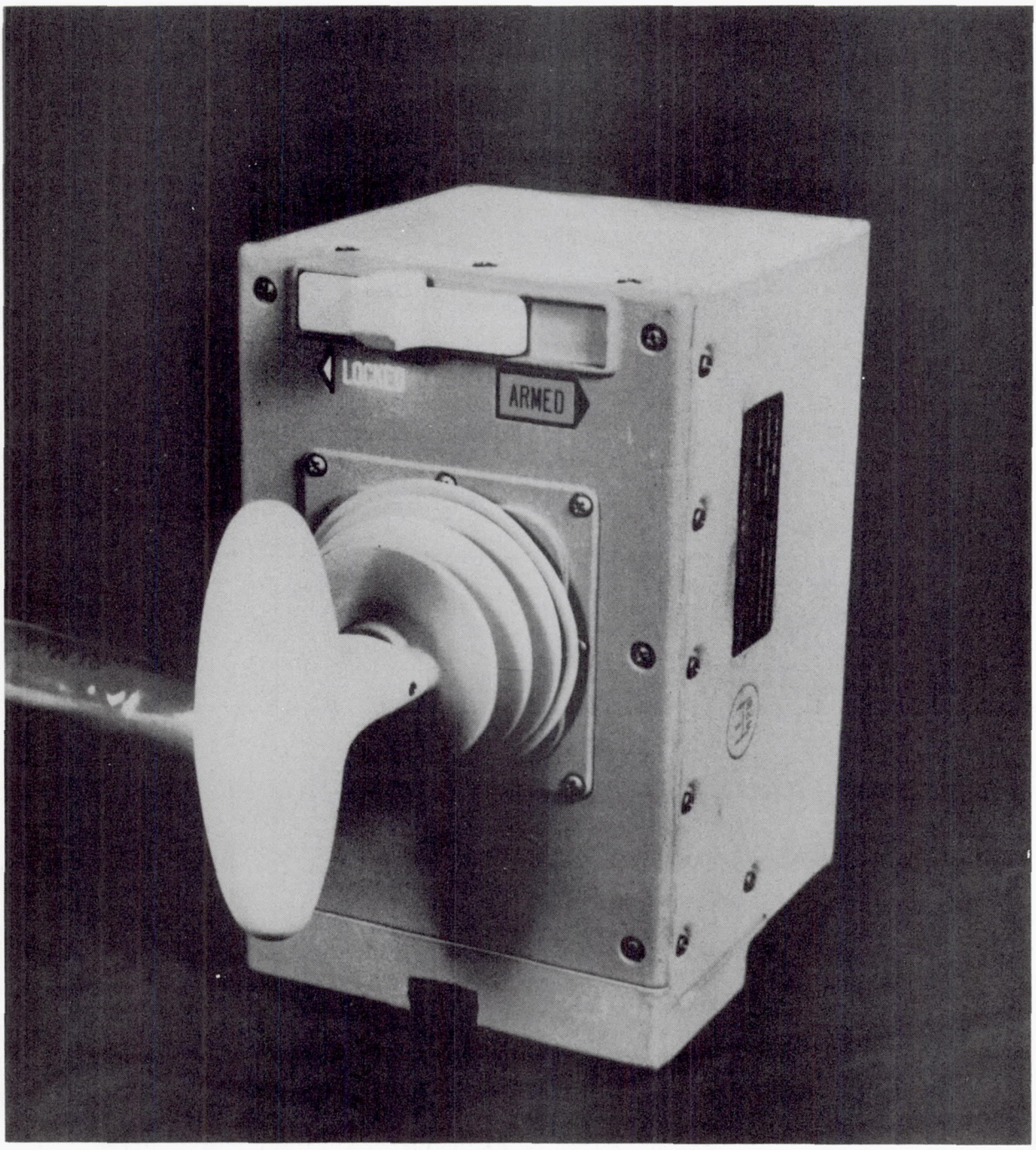

Figure 7-3. Translation Control

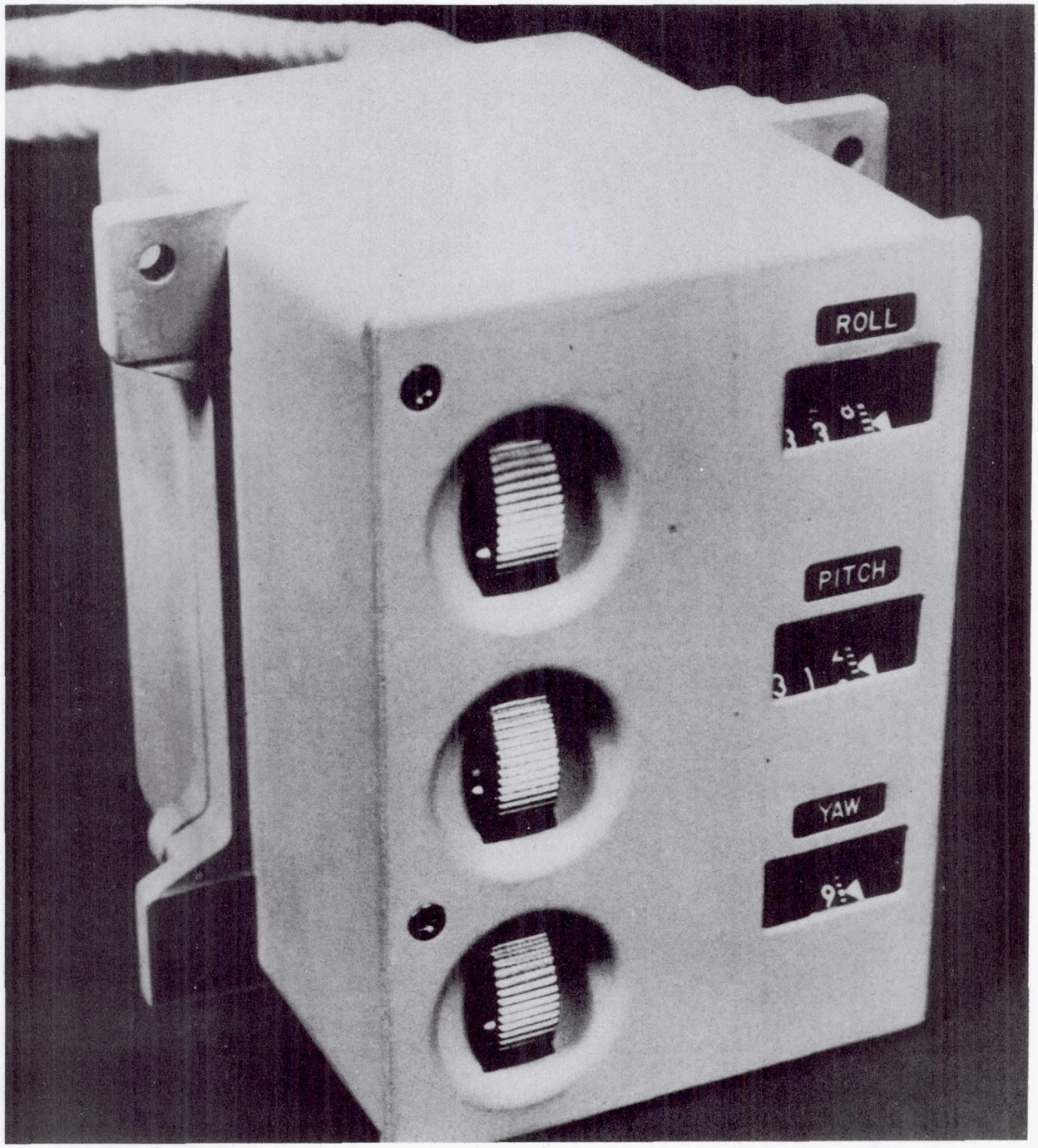

Figure 7-5. Attitude Set Control Panel

3. Provides emergency angular acceleration commands directly to the RCS jet solenoids via controller emergency direct switches (11 degrees).

4. Is capable of simultaneous multi-axis actuation.

Attitude Set Control Panel (AS/CP) (See Figure 7-5)

1. Provides selectable, three axis, spacecraft inertial pointing signals via thumbwheel controls and dial readouts. These signals are summed with either the PGNCS IMU or SCS GDC inertial attitude signals to produce total attitude error signals which are displayed on the FDAI attitude error needles to allow precision manual rotation maneuvers to the selected inertial angles.

Display Functions

Flight Director Attitude Indicator (FDAI) (See Figure 7-6)

1. Provides an inside-out display of spacecraft attitude with respect to a selected inertial frame of reference via a graduated three-axis ball and appropriate reference indices.

2. Provides a fly-to display of spacecraft angular position relative to an inertial reference in all three axes via attitude-error needles.

3. Provides a fly-to display of spacecraft angular rate about each of the three mutually perpendicular spacecraft body axes prior to the 0.05 g level during entry. After 0.05 g, the displays provide angular rate about the spacecraft body pitch axis and the roll and yaw entry axes.

Gimbal Position and Fuel Pressure Indicator (See Figure 7-7)

1. Displays S-II fuel and oxidizer pressure on one of the sets of redundant meter movements during boost.

2. Displays S-IVB fuel and oxidizer pressure on the other set of redundant meter movements during boost.

3. Displays angular position of the service module main propulsion engine gimbal about the pitch and yaw axes, one on each of the dual sets of meter movements.

4. Provides a means for manually inserting initial condition command signals into the actuator servo systems for both pitch and yaw by means of thumbwheel controls.

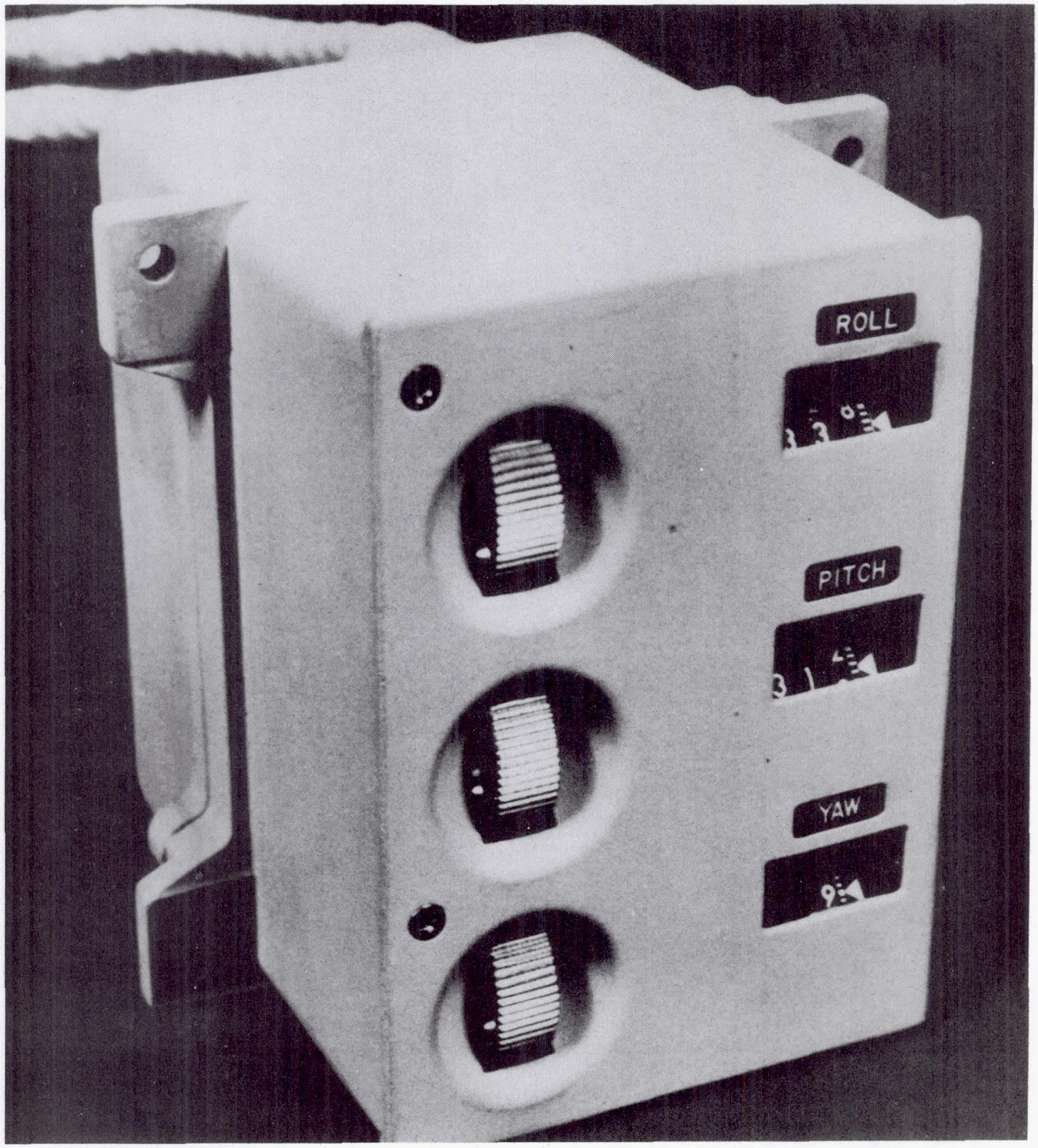

Figure 7-5. Attitude Set Control Panel

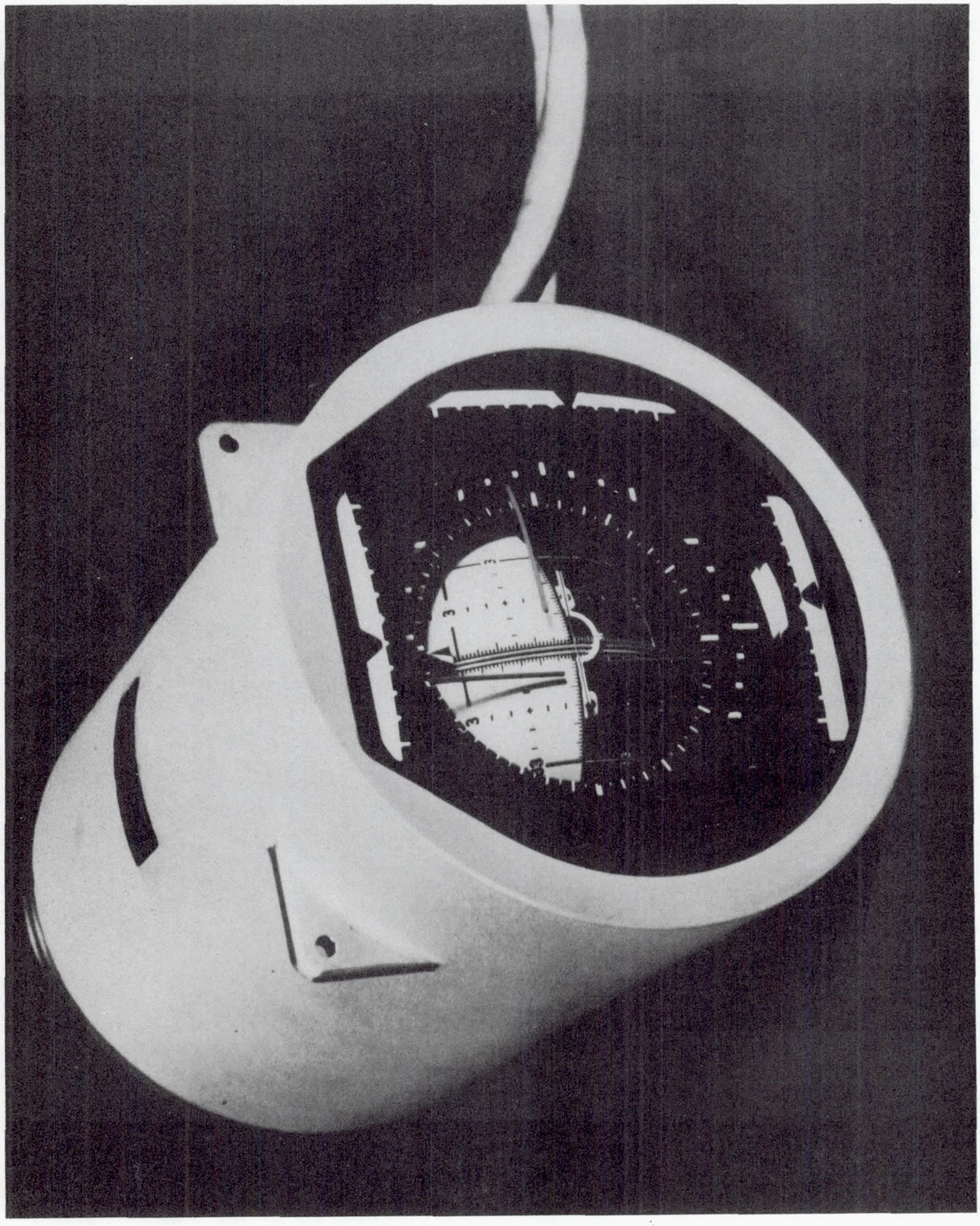

Figure 7-6. Flight Director Attitude Indicator

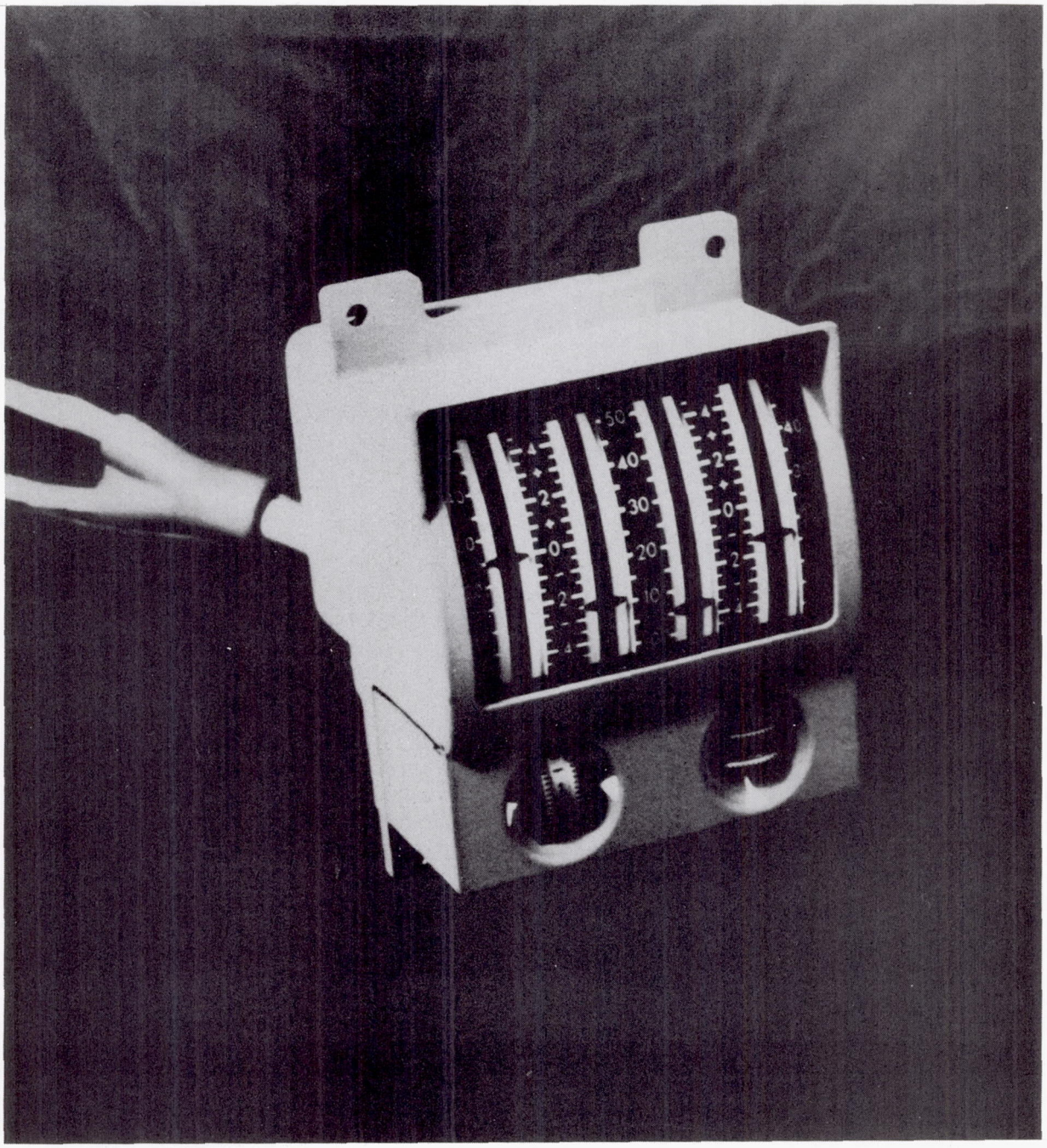

Figure 7-7. Gimbal Position/Fuel Pressure Indicator

Mechanization

The translation and rotation hand controllers were mechanized to the specific requirements listed in Appendix A. The requirements for the rotation hand controllers were imposed on the contractor by NASA at the request of the astronauts. In particular, the shape of the hand grip and the "feel" characteristics of the device were considered to be significant enough to warrant this approach.

Design Features

During the period of the Block II design, the SCS main instrument panel displays were reviewed and a new requirement was established to separate the displays into separate instruments which provided more flexibility in arranging the panel instruments. The result of this requirement was to separate the Block I attitude set gimbal position display into an attitude set control panel and a gimbal position indicator.

During this same period, another requirement was established to utilize the gimbal position indicator as a means to display fuel and oxidizer pressures from the second and third stages of the Saturn V boost vehicle. Since the new display was to provide redundant scales for both the SPS pitch and yaw axis, and the meter movements were changed from a galvanometric to a servometric type, this interface with the booster pressure transducers was not difficult to achieve.

DESIGN REQUIREMENTS

The major requirement or ground rules imposed on the SCS controls and displays by the customer for Block II are summarized in the following paragraphs.

Attitude Display

1. No single failure in the total G&C system will result in a loss of the following:

    a. Gross attitude information displayed on the FDAI sphere

    b. Attitude errors displayed on the FDAI attitude-error needles

    c. Attitude rates displayed on the FDAI rate needles.

2. No single failure in the total G&C system will require the use of a rate command or attitude hold mode to align the spacecraft for thrusting maneuvers.

3. No two failures in the G&C systems will result in a loss of roll attitude information for use during the entry phase.

4. There will be two FDAI's of equal status. Either FDAI will be accessible to the prime or SCS system at all times.

5. Since the IMU is to be aligned with the spacecraft body axes, the FDAI ball will be a straight axis ball (i. e., axes aligned with the spacecraft body axes).

6. The FDAI ball will not accept attitude information directly from the SCS except in entry, when roll will be displayed on an FDAI.

7. All three attitude angles, attitude errors, and angular rates will be displayed in all situations where the crew is monitoring automatic attitude functions or when performing manual attitude functions except during entry.

Performance requirements for the FDAI are given in Table 7-1.

The requirements for the ball are closely related to the type of maneuver and reference system available. In most cases the Apollo vehicle will be moving very slowly and accurate all-attitude readout is desirable. The known use of rate indication to provide a basis for manual control inputs to minimize fuel and to control the undamped vehicle motions in relation to desired attitude was to be emphasized. The display design is such as to allow acquisition of precise attitudes in minimum time or minimum fuel conditions.

The considerations for the selection of the FDAI for Apollo can be itemized as follows:

1. Improved pilot performance in holding attitude during ΔV thrusting maneuvers

2. Direct visual monitoring of IMU precludes gimbal lock in maneuvering and hence imposes a minimum constraint on vehicle maneuvers

3. Improves crew ability to monitor launch program and in detecting catastrophic failure necessitating abort

4. Provides capability to monitor IMU-CMC (command module computer) condition by comparing precision and general attitude readouts with visual information on a one-to-one basis

Table 7-1. FDAI Characteristics

Apollo Attitude Indicator System Requirements	FDAI Functions	Range		Readout Accuracy		Rationale for FDAI Configuration
		ϕ, θ, ψ 360 degrees		2 degrees		
		Entry	Other Phases	Entry	Other Phases	
Provide full (360 degree) attitude reference orientation in three axes Provide means of displaying attitude reference, error, and rate centrally for monitoring and executing complex, multi-axes maneuvers Provide means of displaying various references (e.g., celestial, local vertical) for operator orientation Provide continuous indication of vehicle attitude with respect to chosen reference coordinate frame Provide precise attitude reference information during engine thrusting and navigational sighting phases Provide indication of vehicle angular velocity in three axes using varying scale factors. Provide indication of vehicle deviation from preselected orientation using varying scale factors. Display reference systems limitations during maneuvers	Centralized display of attitudes, vehicle rates, and attitude errors Coarse attitude orientation, obtainable with the ball, and fine orientation using attitude error pointers Defines IMU maneuver limits and the approach of these limits during maneuvers Provides monitor and cross-check of conditions of reference equipment by comparing body axis rates adjacent to body axis attitude errors Provides monitor of SCS execution of reference system commands in three axes by three command needles Variable scale factors in rate and error indication for varying precision of maneuvers required in different mission phases	$\dot{\phi}$ ±50°/sec $\dot{\theta}$ ±5°/sec $\dot{\psi}$ ±25°/sec	±1°/sec ±1°/sec ±1°/sec	±2°/sec ±0.1°/sec ±1°/sec	±0.05°/sec ±0.05°/sec ±0.05°/sec	Spherical shape provides continuous, integrated display attitude reference in three axes for complex, multi-axis maneuvers Provides pictorial link between crew and reference coordinate system while allowing precise readout simultaneously Compatible with astronaut previous pilot training and conditioning Ball can be gimbaled similar to IMU to define limitations simultaneous with attitude indication maneuvers Direction of rate indicators and error pointers compatible with vehicle motion
		Entry	Other Phases	Entry	Other Phases	
		ϕ_{error} ±50°	±5°	±2° at null	±0.5°	
		θ_{error} ±20°	±5°	±2°	±0.5°	
		ψ_{error} ±20°	±5°	±2°	±0.5°	

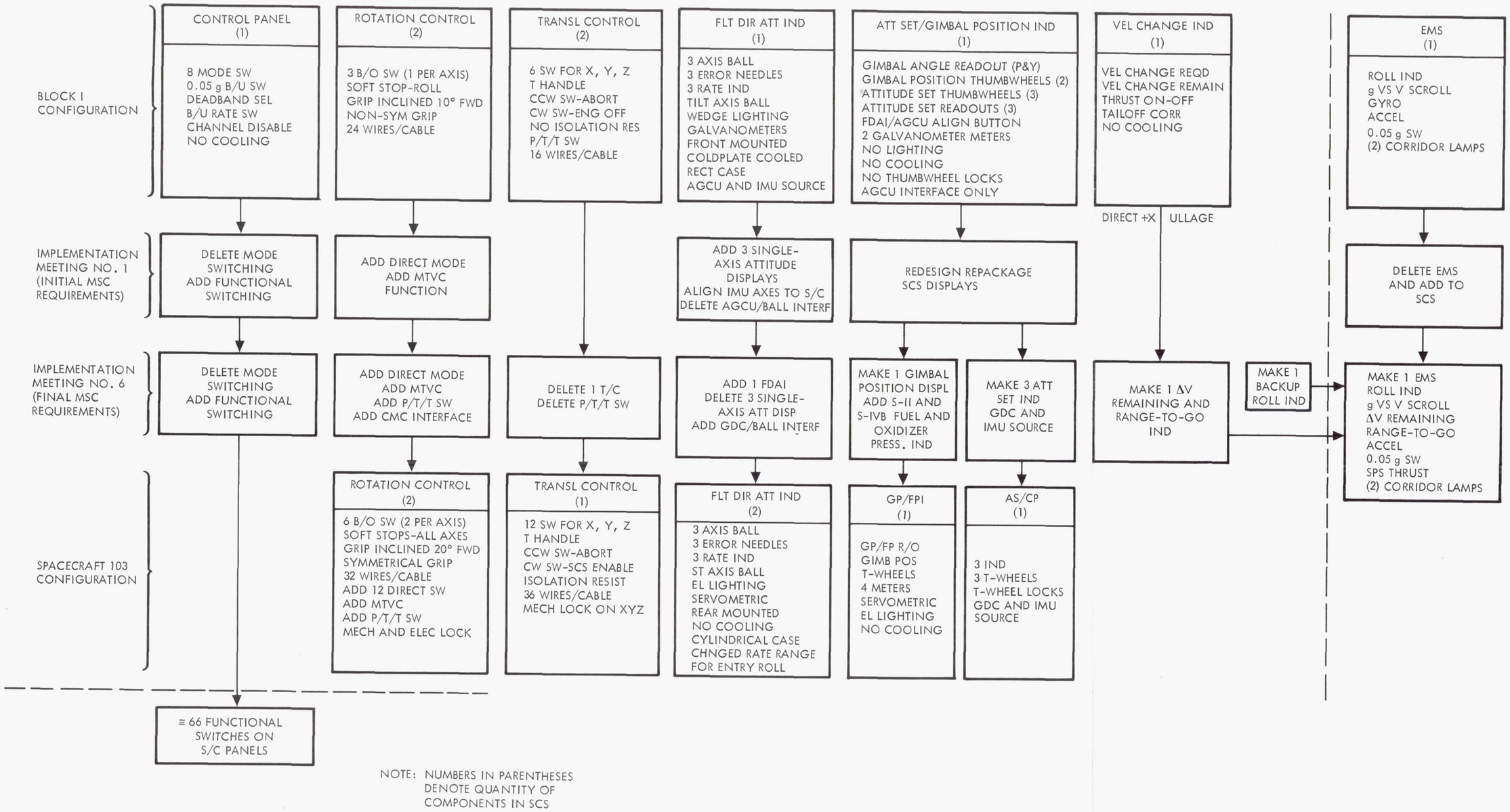

NOTE: NUMBERS IN PARENTHESES DENOTE QUANTITY OF COMPONENTS IN SCS

Figure 7-8. Evolution of SCS Controls and Displays

4. The controller will be provided with a means of mechanically locking it to a null. The locking mechanism will have no effect on the rotary motions of the grip. The locking mechanism will provide a visual indication of its locked-unlocked condition.

PROBLEMS AND CHANGES

Problems

Listed below are the major design and development problems which occurred during the design of the Block II SCS controls and displays.

FDAI

Spacecraft Installation. During the development of the new Block II FDAI with its instrument panel backmounting feature, the need to support a thermal coldplate from the rear face presented a major vibration susceptibility problem. Since the FDAI was cantilevered from its front face, the need arose to provide structural support at its rear face and yet not interfere with the coldplate. The design solution was to redesign the coldplate with through holes, modify the FDAI backplate to receive supporting pins, and add supporting pins to the secondary structure. The obvious impact of this design was the loss of ready access for maintainability purposes for both the FDAI and the coldplate.

Needle Vibration. Because of the slenderness, length, and cantilevered support of the attitude error needles, redesign was required as a result of vibration testing. These needles were ruggedized to withstand the vibration environment.

Electroluminescent Lighting. When the Block II control and Display redesign was instituted, NR implemented the use of integral electroluminescent (E/L)-type lighting. To begin with, the SCS subcontractor experienced difficulties in orienting commercial vendors to aerospace-type requirements. In addition, problems were encountered with the consistency of E/L lamp characteristics, with the reflections and aberations from nearby surfaces, and with the uniformity of light intensity and color. These problems were ultimately resolved but NR was forced to change the E/L lighting power and power factor requirements. It was found that better lamp operation was obtained when the supply voltage is higher than the nominal spacecraft voltage.

Lighting Control. A variac transformer is part of the spacecraft wiring so that display lighting intensity can be varied. The current surge resulting from on-off operation of this control loads down the ac inverter resulting in line-voltage variations. These voltage variations cause the

3. No two failures in the G&C systems will result in a loss of roll attitude information for use during the entry phase.

4. There will be two FDAI's of equal status. Either FDAI will be accessible to the prime or SCS system at all times.

5. Since the IMU is to be aligned with the spacecraft body axes, the FDAI ball will be a straight axis ball (i. e., axes aligned with the spacecraft body axes).

6. The FDAI ball will not accept attitude information directly from the SCS except in entry, when roll will be displayed on an FDAI.

7. All three attitude angles, attitude errors, and angular rates will be displayed in all situations where the crew is monitoring automatic attitude functions or when performing manual attitude functions except during entry.

Performance requirements for the FDAI are given in Table 7-1.

The requirements for the ball are closely related to the type of maneuver and reference system available. In most cases the Apollo vehicle will be moving very slowly and accurate all-attitude readout is desirable. The known use of rate indication to provide a basis for manual control inputs to minimize fuel and to control the undamped vehicle motions in relation to desired attitude was to be emphasized. The display design is such as to allow acquisition of precise attitudes in minimum time or minimum fuel conditions.

The considerations for the selection of the FDAI for Apollo can be itemized as follows:

1. Improved pilot performance in holding attitude during ΔV thrusting maneuvers

2. Direct visual monitoring of IMU precludes gimbal lock in maneuvering and hence imposes a minimum constraint on vehicle maneuvers

3. Improves crew ability to monitor launch program and in detecting catastrophic failure necessitating abort

4. Provides capability to monitor IMU-CMC (command module computer) condition by comparing precision and general attitude readouts with visual information on a one-to-one basis

Table 7-1. FDAI Characteristics

Apollo Attitude Indicator System Requirements	FDAI Functions	Range		Readout Accuracy		Rationale for FDAI Configuration
		ϕ, θ, ψ 360 degrees		2 degrees		
		Entry	Other Phases	Entry	Other Phases	
Provide full (360 degree) attitude reference orientation in three axes	Centralized display of attitudes, vehicle rates, and attitude errors	$\dot{\phi}$ ±50°/sec	±1°/sec	±2°/sec	±0.05°/sec	Spherical shape provides continuous, integrated display attitude reference in three axes for complex, multi-axis maneuvers
Provide means of displaying attitude reference, error, and rate centrally for monitoring and executing complex, multi-axes maneuvers	Coarse attitude orientation, obtainable with the ball, and fine orientation using attitude error pointers	$\dot{\theta}$ ±5°/sec	±1°/sec	±0.1°/sec	±0.05°/sec	Provides pictorial link between crew and reference coordinate system while allowing precise readout simultaneously
Provide means of displaying various references (e.g., celestial, local vertical) for operator orientation	Defines IMU maneuver limits and the approach of these limits during maneuvers	$\dot{\psi}$ ±25°/sec	±1°/sec	±1°/sec	±0.05°/sec	
Provide continuous indication of vehicle attitude with respect to chosen reference coordinate frame	Provides monitor and cross-check of conditions of reference equipment by comparing body axis rates adjacent to body axis attitude errors	Entry	Other Phases	Entry	Other Phases	Compatible with astronaut previous pilot training and conditioning
Provide precise attitude reference information during engine thrusting and navigational sighting phases	Provides monitor of SCS execution of reference system commands in three axes by three command needles	ϕ_{error} ±50°	±5°	±2° at null	±0.5°	Ball can be gimbaled similar to IMU to define limitations simultaneous with attitude indication maneuvers
Provide indication of vehicle angular velocity in three axes using varying scale factors.	Variable scale factors in rate and error indication for varying precision of maneuvers required in different mission phases	θ_{error} ±20°	±5°	±2°	±0.5°	Direction of rate indicators and error pointers compatible with vehicle motion
Provide indication of vehicle deviation from preselected orientation using varying scale factors.		ψ_{error} ±20°	±5°	±2°	±0.5°	
Display reference systems limitations during maneuvers						

5. Provides a convenient monitor of SCS performance to PGNCS commands, via the command needles, in direct cross-check with angular information.

6. Provides a means of executing nonprogrammed maneuvers

7. Provides a check on reaction jet performance via rate response to commanded jet firings.

8. Provides for recovery from tumbling via rate information

9. Provides a gross indication of entry flight path angle

10. Display concept provides a familiar link to previous pilot training and conditioning.

Attitude Controller

Two identical three-axis hand controllers are supplied, one for the command pilot (right-arm rest of left-hand seat) and one for the pilot (left-arm rest of the right-hand seat).

An MSC-imposed specification controlled the design details of these devices by specifying:

1. Controller forces (via torque versus deflection curves)

2. Controller deflection limits to soft stops and hard stops

3. Controller axes orientations

4. Controller axes relative locations to pilot axes

5. Control system mode actuation points within controller deflections

6. Hand grip form factor.

Translation Controller

1. One translation hand controller was supplied with the necessary built-in redundancy for reliability.

2. The controller will be connected to the system without provisions for switching out its signals.

3. The controller will be provided with a dovetail to provide a means of securing it to a place of usage or storage.

4. The controller will be provided with a means of mechanically locking it to a null. The locking mechanism will have no effect on the rotary motions of the grip. The locking mechanism will provide a visual indication of its locked-unlocked condition.

PROBLEMS AND CHANGES

Problems

Listed below are the major design and development problems which occurred during the design of the Block II SCS controls and displays.

FDAI

Spacecraft Installation. During the development of the new Block II FDAI with its instrument panel backmounting feature, the need to support a thermal coldplate from the rear face presented a major vibration susceptibility problem. Since the FDAI was cantilevered from its front face, the need arose to provide structural support at its rear face and yet not interfere with the coldplate. The design solution was to redesign the coldplate with through holes, modify the FDAI backplate to receive supporting pins, and add supporting pins to the secondary structure. The obvious impact of this design was the loss of ready access for maintainability purposes for both the FDAI and the coldplate.

Needle Vibration. Because of the slenderness, length, and cantilevered support of the attitude error needles, redesign was required as a result of vibration testing. These needles were ruggedized to withstand the vibration environment.

Electroluminescent Lighting. When the Block II control and Display redesign was instituted, NR implemented the use of integral electroluminescent (E/L)-type lighting. To begin with, the SCS subcontractor experienced difficulties in orienting commercial vendors to aerospace-type requirements. In addition, problems were encountered with the consistency of E/L lamp characteristics, with the reflections and aberations from nearby surfaces, and with the uniformity of light intensity and color. These problems were ultimately resolved but NR was forced to change the E/L lighting power and power factor requirements. It was found that better lamp operation was obtained when the supply voltage is higher than the nominal spacecraft voltage.

Lighting Control. A variac transformer is part of the spacecraft wiring so that display lighting intensity can be varied. The current surge resulting from on-off operation of this control loads down the ac inverter resulting in line-voltage variations. These voltage variations cause the

rate sensors to oscillate, resulting in inadvertant reaction jet firings. To minimize the effect of this, a resistor was put across the variac and the spacecraft operational procedures changed so that the display lights are dimmed and not turned off.

AS/CP

Drift. During vibration testing, it was found that the attitude set thumbwheels would slowly drift. To preclude this problem, friction-type discs were incorporated into the thumbwheel support mechanism.

Hand Controllers

Cabling. Major problems have occurred with the cables emanating from both the rotational and translational controls. Because of their exposed positions in the command module cabin, they have been subjected to excessive wear and tear during checkout. Constant movement and stowage have flexed the cables until cracks appear. Deletion of the outer cable covering exposed a Teflon braid which had no abrasion or puncture resistance. Other nonflammable materials, when applied to the cables, were either not flexible enough or cracked when flexed. Strain relief of the cables, where they exit from the enclosures, was a major problem in that the excessive strains actually encountered were not originally envisioned and consequently not specified in the initial design requirements.

The subsequent tradeoff among material flammability, durability, and flexibility characteristics has proven to be extremely difficult. Solution of this problem, still in the development stage, may prove to be a significant design advance for exposed cabling. The present solution is to use a special covering and to restrict the use of the hand controller during the ground test phase. Also, an alternate controller is used during this time period.

Handle Shape and Force Characteristics. The design of the handle shape and the force versus deflection characteristics are a subjective requirement, and experienced a long and tedious process of evolution. Continual iteration of the design went on for several years during the middle time period of the program. These iterations occurred even after hardware commitments had been made. A belated solution was the generation by the customer of the specifications presented in Appendix A.

Changes

The SCS control and display subsystem had one major evolutionary cycle, from a functional standpoint, which occurred during mid-1964 when the Block II system was conceived (see Figure 7-8). The original Block I control and display subsystem was comprised of eight devices:

One control panel

Two rotational controllers

Two translational controllers

One flight director attitude indicator

One attitude set/gimbal position indicator

One velocity change indicator

These devices provided the crew with the capability to effect either automatic or manual control of the spacecraft and to visually display its reactions to control inputs. It was the primary control system for the vehicle and, as such, was classified as a criticality I system, i.e., a system whose continued performance was required to meet the established crew safety criterion. The number of displays and controls utilized, their relative locations within the command module, and their built-in redundancy features reflected this primary control system concept.

The Block I control and display subsystem was generally revamped and relocated on the spacecraft control panels (see Figure 7-9) as a result of the new Block II G&C concept. The final Block II control and display subsystem was comprised of seven devices:

Two rotational controllers

One translational controller

Two flight director attitude indicators

One gimbal position/fuel pressure indicator

One attitude set control panel

This new complement of hardware was both different in quantity and function from its Block I counterpart as well as in the reliability requirements established for each device. Whereas the Block I reliability requirement for the total SCS was established as providing a probability of achieving crew survival of 99.99 percent and mission success of 99.5 percent, the Block II devices were assigned apportioned reliability values in terms of allowable failure rates which would maintain the overall G&C reliability as before. As a backup system now, the individual SCS device failure rates were permitted to increase.

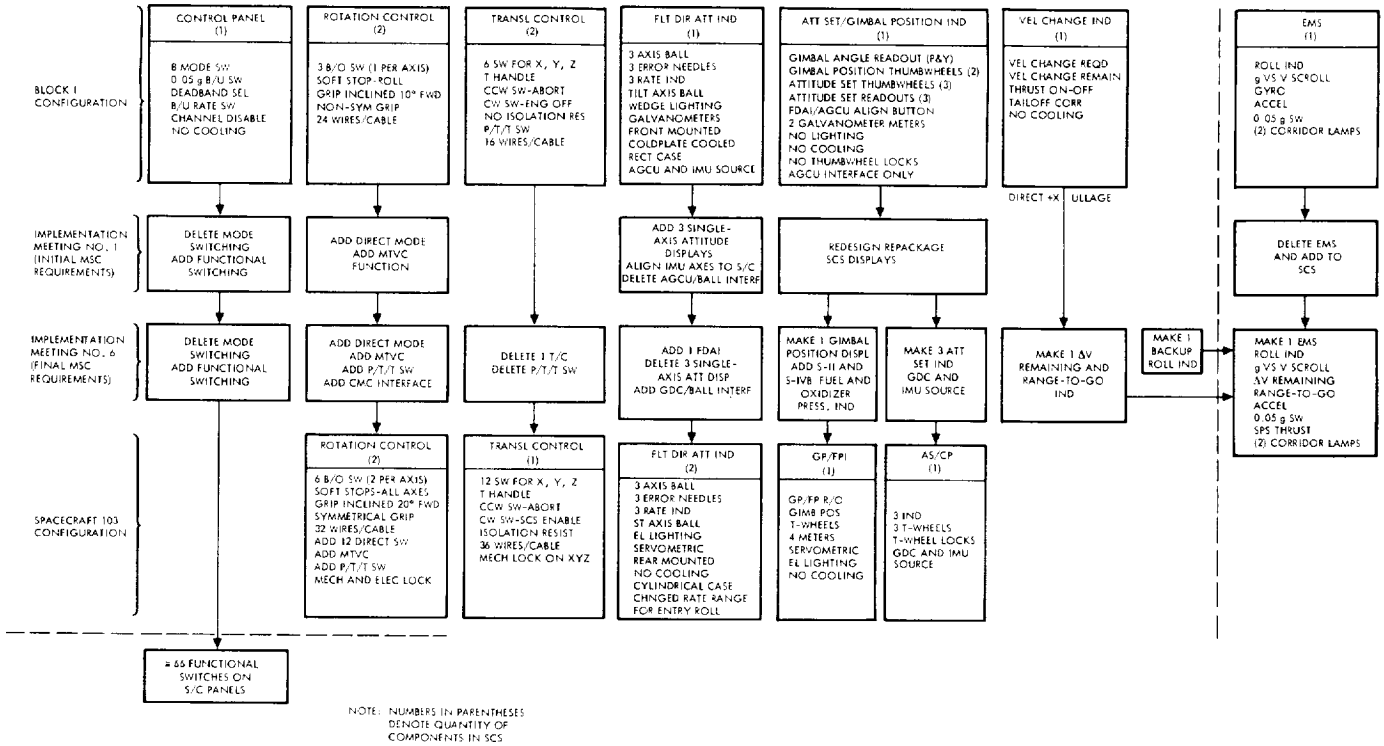

Figure 7-8. Evolution of SCS Controls and Displays

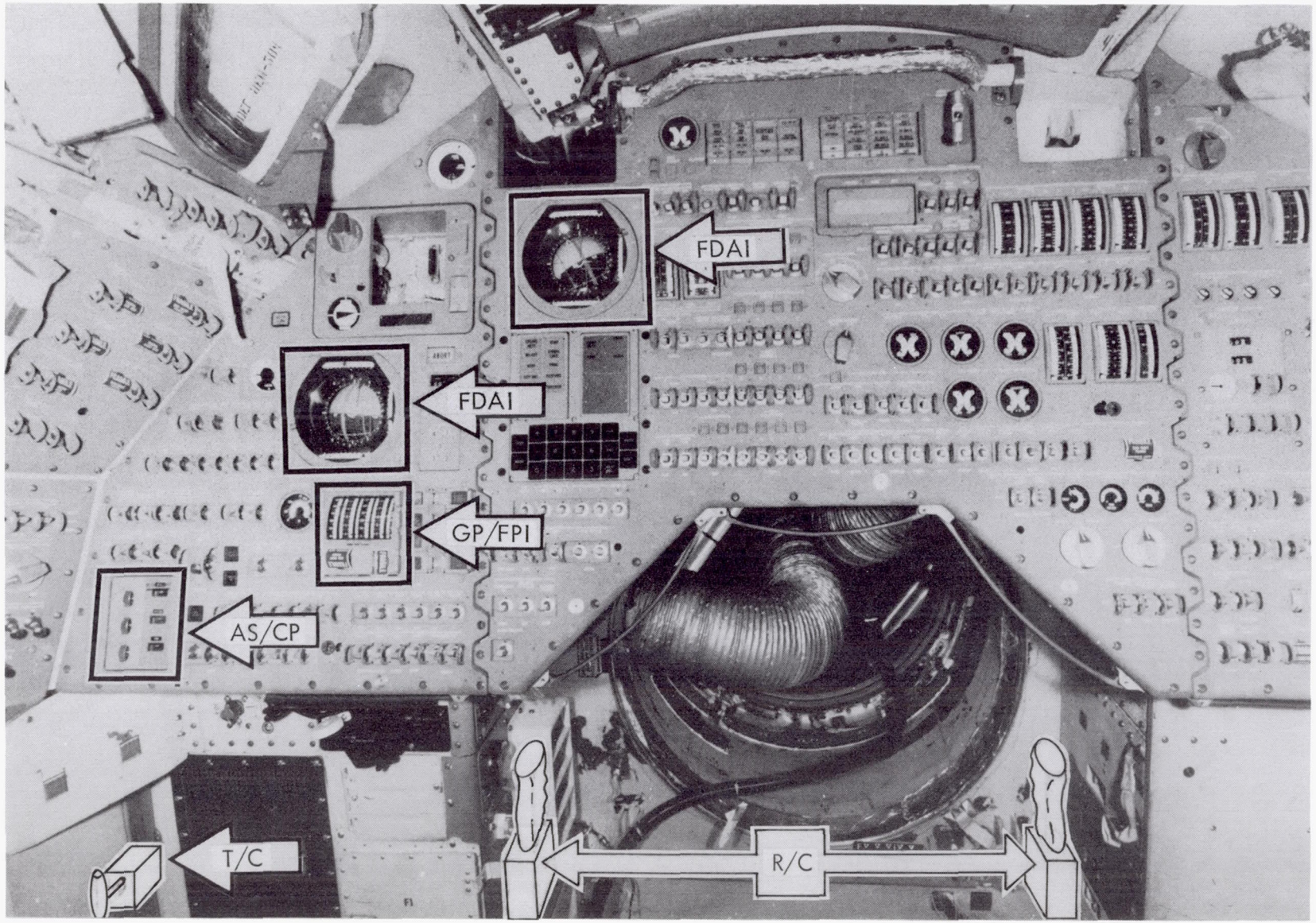

Figure 7-9. Main Control Panel

The functions assumed by the Block II control and display devices may be summarized as follows:

1. Functional switching of control system elements eliminated the Block I control panel which utilized mode switching. In lieu of this panel, 66 separate functional switches were mounted on various spacecraft panels.

2. Rotational control of the spacecraft, via manual means, was still effected with the rotational controller. However, another redundant breakout switch per axis was added. "Soft" stops were added in the pitch and yaw axes and 12 additional "direct" switches (four per axis) were added at the soft stops for direct RCS control purposes. The hand grip was modified from a nonsymmetrical to a symmetrical form and the longitudinal or yaw axis inclined forward to 20 degrees from the original 10 degrees. A trigger-type push-to-talk communications switch was added. An interface signal to the CMC was added which permits rotation commands to the reaction jets through CMC control.

3. Translation control of the spacecraft, via manual means, was still effected with the translational controller. However, another set of two redundant control actuation switches per axis was added. The clockwise rotation of the tee-handle now actuates a switch which enables the SCS to assume the spacecraft control functions from the PGNCS. Isolation resistors were added to provide short-circuit protection for the SCS and the CMC electronics during translation commands. Also, the push-to-talk communication switch was removed from this device.

4. Attitude display of the spacecraft is still retained in the FDAI. However, two FDAI's are now utilized and the roll axis of the three-axis ball was aligned with the instrument's case since the IMU roll axis was now aligned with the spacecraft +x body axis. Servometric meter movements were substituted for the galvanometric meter movements to improve accuracy and reliability and reduce weight. Electroluminescent lighting was utilized to better illuminate all readable features of the device. The instrument is now rear-mounted on the main instrument panel. The angular rate ranges were increased in roll to account for the higher roll-rate capability required during entry. The attitude error needles were foreshortened to eliminate vibration susceptibility.

5. Gimbal position of the service module main propulsion system is now a separate instrument. Four separate servometric meter movements are utilized — two each for the pitch and yaw axes. During the boost phase, the four meter movements display S-II and S-IVB fuel and oxidizer pressures. Scale illumination utilizes electroluminescent lighting. For SCS delta-velocity maneuvers, manual SPS engine gimbal trim capability is provided. Desired gimbal trim angles are set in with the pitch and yaw trim thumbwheels — these thumbwheels have a mechanical lock.

6. The attitude set/control panel still provides a means to select spacecraft inertial pointing directions. However, this device is now a separate instrument and the thumbwheel controls incorporate mechanical locks. In Block I, the inertial (Euler) attitude error output signals were sine functions of the difference between the input command and the AGCU. In Block II, these Euler attitude error signals are the result of either (1) the difference between the IMU inertial Euler angles and the commanded Euler angles or (2) the difference between the GDC Euler angles and the commanded Euler angles resolved through a Euler-to-body rate transformation.

Ball Markings

The markings of the 4-1/2-inch-diameter FDAI sphere and some of the indices used to read the ball were changed during system development. Two markers suspended in front of the ball, the reentry symbol (⊕) and the miniature aircraft symbol (-⌣-), were deleted. The former symbol indicated the spacecraft stability axis during entry relative to the body +x axis and the aircraft symbol indicated the spacecraft +x axis. These symbols were used to interpret the ball during the appropriate flight modes. When the ball was no longer used for entry roll control, the two symbols were merged and then deleted and a lubber-line-type reference utilized. In addition, the horizon and pitch great circles were graduated in one degree increments per astronaut request.

CONCLUSIONS

Based upon the experience with the Apollo SCS controls and displays, three conclusions are offered, all concerned with the hand controllers:

1. Provide firm specifications for crew personal preference items.

2. Design hand controllers as plug-in units so that cabling can be part of spacecraft wiring.

3. Treat hand controllers as fragile items by minimizing ground use in the spacecraft.

The first conclusion is a result of the hand controller design difficulties during the middle time period of the program. Since subcontractors have no way of determining the design requirements for crew personal items, because of the subjective nature of this equipment, the specifications are best provided by the customer.

The second and third conclusions are a result of difficulties encountered with the hand controllers during the extensive spacecraft 101 checkout procedures. This was a problem that emerged late in the program because the earlier flights were unmanned and thus lacking in controller operational experience.

8.0 HARDWARE DESIGN PHILOSOPHY

This section discusses the basic hardware design philosophies embodied in those disciplines which cut across the entire complement of SCS hardware. This includes the following areas:

- Reliability
- Environments
- Safety
- Access and maintainability
- Interfaces
- Electrical
- Thermal
- Mechanical
  - Packaging philosophy
  - Enclosures
  - Displays
  - Materials and finishes
  - Weight
  - Growth
- Electromagnetic interference
- Configuration control

Quality assurance

Design quality controls

Procurement control

Control of fabricated articles

Training and certification of personnel

Testing

Development testing

Qualification testing

Acceptance testing

Installation checkout

Test tolerances

GENERAL

The general hardware design features of the Block II stabilization and control system for the Apollo spacecraft may be characterized as follows:

1. The physical system is comprised of 14 contract end-items (CEI): (See Figure 8-1 and Table 8-1).

One control, reaction jet, and engine on-off

One electronic control assembly

One electronic display assembly

One coupler, gyro display

One servo amplifier, thrust vector position

Two gyro assemblies

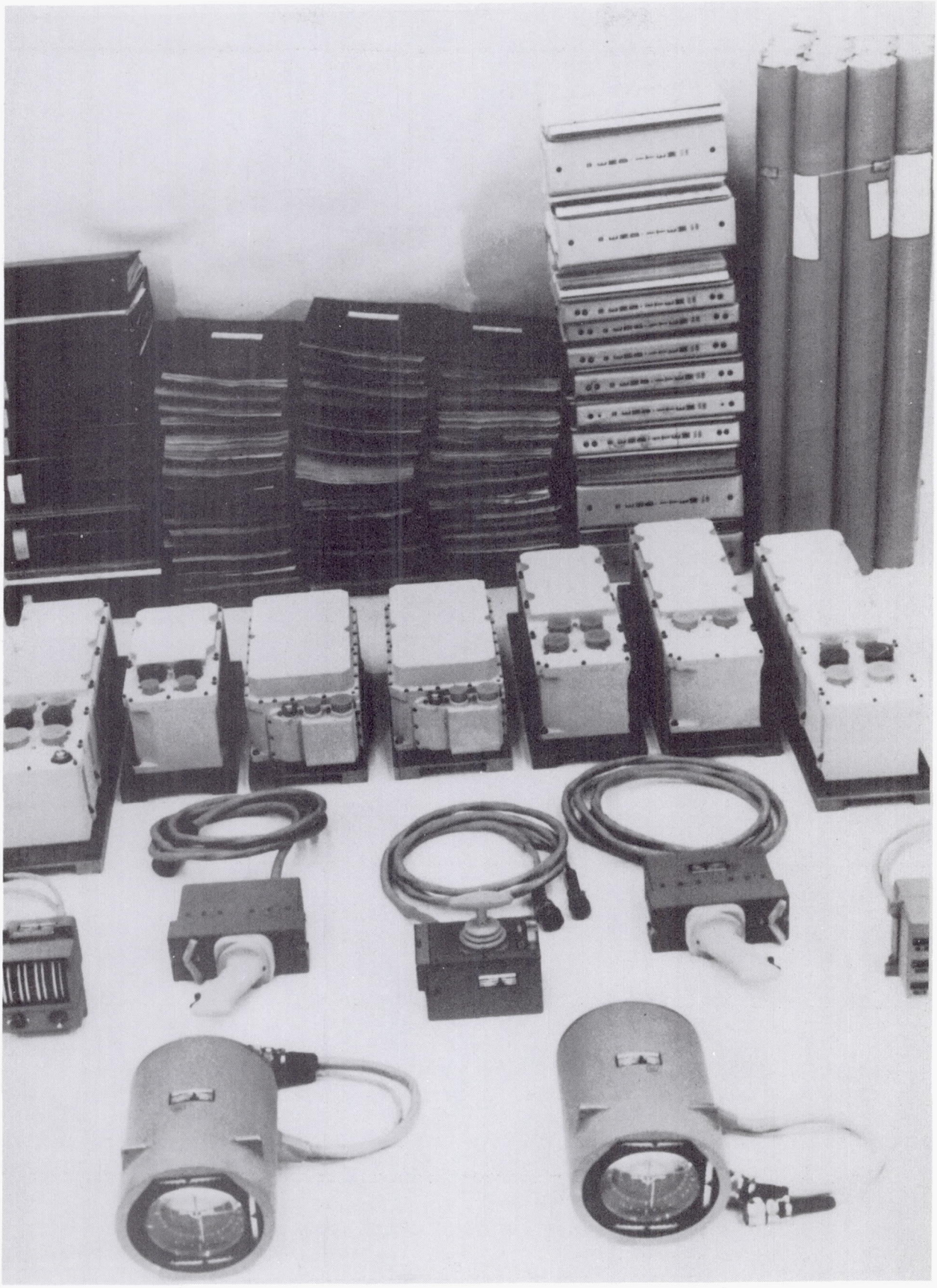

108RE14154

Figure 8-1. Block II Contract End Items

Table 8-1. Hardware Physical Characteristics

BLOCK II CEI	QUANTITY PER SYS	WEIGHT (LBS)	VOLUME (IN^3)	BLOCK I CEI EQUIV	REASON FOR DIFFERENCE
ECA	1	16.5	567	PITCH ECA (1)	POWER SAVING & RELIABILITY CONSIDERATIONS OF BLOCK II CONCEPT
TVSA	1	12.5	430	YAW ECA (1)	
RJD	1	20.7	802	ROLL ECA (1)	
EDA	1	25.0	761	DISPLAY PORTION OF DECA (1)	ADDED BLOCK II DISPLAY REDUNDANCY
GDC	1	24.9	686	AUX ECA (1)	BLOCK II ARS MECHANIZATION DIFFERENCES
GA	2	45.8	1050	(1) AGAP & PORTION OF DECA + RGP (1)	REDUCE CRITICALITY OF MATCHED COMPONENTS
R / C	2	19.0	280	R / C (2)	BLOCK II REQMT OF DISCRETE FOR EACH DIRECTION OF ROTATION
T / C	1	6.0	112	T / C (2)	BLOCK II REQUIREMENT FOR REDUNDANT OUTPUTS
FDAI	2	18.2	700	FDAI (1)	NO FUNCTIONAL DIFFERENCE
AS / CP	1	3.3	70	AS/GPD (1)	1) BREAK UP DISPLAYS TO PROVIDE GREATER FLEXIBILITY OF SMALLER PACKAGES
GP / FPI	1	2.9	72		2) ADD FUEL DISPLAY & REDUNDANCY REQUIREMENTS
TOTALS	14	194.8	5530	238.9 LB / 6524 IN^3	

Two indicators, attitude, flight director

One indicator, gimbal position, and fuel pressure*

One control panel attitude set*

One control, translation*

Two controls, rotation*

2. These CEI's are electrically continuous, hermetically sealed, conduction cooled, individually mounted structures containing no vibration isolation provisions except for the Gyro Assemblies

3. The packaging of hardware components into individual CEI's is arranged for a logical functional grouping of system elements and for ease of system malfunction isolation and troubleshooting.

4. The electronic assemblies are electron-beam-welded aluminum structures, housing stacked cordwood-type modules containing high-reliability electronic piece parts. The parts are interconnected by welded sections of buss wire which also connect to module exit headers. The modules are interconnected by welded exit connections to buss wires sandwiched between thin film Mylar matrix sheets. The matrix connections to external connectors are by lead wires.

5. Approximately 15 percent of the total system electronics are integrated circuit flatpacks which significantly reduce system weight, volume, and power requirements.

6. The display panels and indicators are electron-beam-welded aluminum structures. The indicator enclosures house servometric-type meter movements, high-reliability electronic piece parts, and incorporate electroluminescent-type dial face lighting. The control panel houses high-reliability electronic resolvers.

*No coldplate cooling

7. The hand controllers are aluminum structures incorporating a tapered-wedge type lock/stow mounting feature. The controller hand grip form factors and force and travel provisions are human factored for optimum control performance in the space environment.

8. System functions which are critical to crew safety are assured by the addition of switchable redundant circuitry.

DETAIL DESIGN REQUIREMENTS

The major design categories in the fabrication of the SCS included reliability, environments, safety, access and maintainability, electrical, thermal, mechanical, EMI, system interfaces, and quality assurance. A brief summary of the design philosophy adopted for each of these areas follows.

Reliability

The SCS reliability goals were established as a 99.5 percent probability of achieving a lunar landing and return mission and a 99.99 percent probability of achieving crew survival in the event of an abort. The term "goal" was stated since there was no provision for a separate reliability test program—the "demonstration" of system reliability was accomplished solely by analytical means. The system was modeled with a reliability logic diagram wherein each identifiable hardware system element was assigned a reliability value so that, for any given control path, the product of these values yielded the required overall reliability number. This process was iterated until each element contained a reliability value that was thought to be attainable in practice and the total path yielded the desired result.

The components and piece parts necessary to construct these hardware elements were procured through rigidly controlled high-reliability part specifications. These specifications included such requirements as NPC 200-2 or NPC 200-3 quality control requirements, lot configuration control or individual part serialization, special packaging and handling requirements, specified failure rates, special 100 percent part processing tests, special lot sampling tests for quality assurance, and/or substantiation of lot integrity and qualification and failure rate verification. All of these tests were completed prior to part utilization.

As subsystem breadboard designs were completed, the selected piece parts were subjected to parameter variation and stress analyses so that a parts application review could be conducted. This review between the reliability engineer, design engineer, and production engineer provided a measure of confidence that the given design could meet the reliability

requirements as well as the producibility and specified functional and performance requirements. Special reliability training was provided for all cognizant personnel in Engineering, Quality Assurance, Procurement, and Manufacturing to acquaint and motivate these personnel with the role reliability was to play on the Apollo program.

Completed prototype designs were subjected to failure mode and effects analyses. Critical failures such as single-point failures and loss of redundancy were identified; failure modes such as probability of failure and propagation of failures and consequent effect were identified. The elimination of undesirable failure modes was factored into the design.

A structured test program was an integral part of the design process and from this came the only empirical data which could be used for reliability verification. The test program was basically divided into two phases: development and qualification. Development testing was concerned with materials, components, and subsystems or systems. Allowable materials were controlled by the contractor and all subcontractor materials not specifically contained in the prime contractors' materials specification were subject to prior approval. Components, piece parts, and subsystems that were designed specifically for Apollo were subjected to rigorous functional and performance tests under standard laboratory conditions. Design problems were worked out at this stage of development.

Formal qualification tests were performance and environmental tests conducted on components or subsystems manufactured under production standards to demonstrate that the production equipment meets all applicable requirements of design and performance. The type of tests selected to demonstrate design compliance were design-proof tests and mission-life tests. The design-proof tests were single-environment tests at specification limits conducted on each individual contract end item. Mission-life tests were conducted on a complete system in two phases: ground checkout and prelaunch and mission performance. One system was subjected to one cycle (400 hours) of ground checkout and prelaunch and two cycles (672 hours) of mission performance. During this test the system was exposed to vibration and then to a salt-fog atmosphere. Off-limits tests were to have been conducted on a full complement of end items from the mission-life test system and were to be subjected to both a combined environment of high temperature and vibration and an overvoltage test in which these parameters were increased until a failure occurred. In the interest of cost savings, however, NASA deleted this requirement.

Environments

The natural and induced physical environmental extremes to which the SCS equipment was designed were specified by individual in-house organizations skilled in these fields. Early in the Block I program, many of these design criteria were late in being fully developed — later than was required to support the design process of the subcontractor. Of the specified environments—temperature, pressure, humidity, corrosive contaminants, radiation, ozone, vibration, acceleration, shock, and acoustic noise—only humidity, temperature, and vibration presented specific problems to the SCS.

In the Block I design, which utilized electronic assembly enclosures with open sides, exposed connectors, and plug-in cards for the in-flight test and maintenance concept, the discovery by NASA that the cabin could be humid and salt-laden was catastrophic. This situation led to a crash effort to find sealants and sealing techniques which would withstand the space environment for exposed electrical connections while still retaining the maintainability features of the design. In Block II, this condition was alleviated by construction of hermetically sealed electronic assemblies.

The original Block I crash safety requirements for panels and displays were specified at 78 g's, 25 milliseconds rise time; later this requirement was increased to 78 g's, 11 milliseconds rise time. Table 8-2 presents a brief summary of the design environments. A more detailed listing is beyond the scope of this report.

Safety

Because the SCS is particularly sensitive or critical to mission success and crew safety, many conditions relating to these considerations were imposed on the design. The SCS was specified to be designed to fail safe; that is, a failure was not permitted to propagate or cause other failures or prevent the proper performance of a redundant path. Also, the most probable failure mode should cause signals to go to a zero or null condition. The use of failure monitor circuits required the specific approval of the contractor. Redundancy was allowed only where single-point failures could cause loss of the crew. Analyzing complex circuitry to demonstrate compliance to these conditions is inherently a tedious long-term effort. As such, design changes were required well into the program and will undoubtedly continue.

Table 8-2. Environments

CM interior temperature	70 ± 20 F normal 0-150 F emergency extremes for 100 hours
Coldplate temperature	55 to 127 F (160 F at end of entry)
CM atmosphere	5 psi, 100 percent O_2, 100 percent humidity (or 10^{-4} mm Hg for 4 days) (emergency)
Shock	20 G, 11 ms rise time (handling) 78 G, 11 ms rise time (landing)
DC line voltage	25 to 30 v nominal AC ripple 1 v peak to peak RF transient ± 50 v
AC line voltage	113 to 117 vac, 3 phase Transient: 150 v rms max 50 v rms min
Shipping	-20 F (24 hours)

Access and Maintainability

The SCS was designed so that no field repair, adjustment, or calibration was required within the specified life. The in-flight test and maintenance concept was deleted in Block II. This was probably a prudent decision in that the complex electronic nature of the system, the limited amount of on-board test equipment, and the relative inexperience of astronauts as electronic designers or test engineers precluded the probability of successful attainment of the in-flight test capability. The only SCS items originally classified as limited life were the BMAG's based on analyses indicating that to meet accuracy requirements drift trim would be required at intervals less than the 1400 hours of service life required of the system. Subsequently, performance results showed this trim would not be necessary and the limitation was removed.

Interfaces

The SCS had a direct functional and electrical interface with the guidance and navigation, command module reaction control, service module reaction control, service module service propulsion, entry monitor, mission sequencer, spacecraft control panel, electrical power, and spacecraft booster fuel pressure systems (see Figure 8-2). In addition, it interfaced physically and mechanically with the spacecraft command module structure and electrically with the bench maintenance area ground support equipment and prelaunch and launch automatic checkout equipment. The number of physical and electrical interfaces involved presented a significant systems engineering type of effort to properly and adequately integrate the SCS with these other systems during the early definition phases of the program. As would be expected, many incompatibilities and errors were involved both before and after the initiation of the hardware design process.

The basic method employed to control these interfaces was the use of an interface control drawing with the program associate contractor (viz., MIT) and specification control drawings and procurement specifications with the subcontractor. The interface control between in-house spacecraft system design groups was effected through normal liaison and coordination and by means of reviewing and initialing each other's procurement documents.

Electrical

The electrical design of the Block II SCS was basically conventional in concept. The enclosures were hermetically sealed, which precluded problems associated with humidity and arcing, explosion-proofing, and dielectric

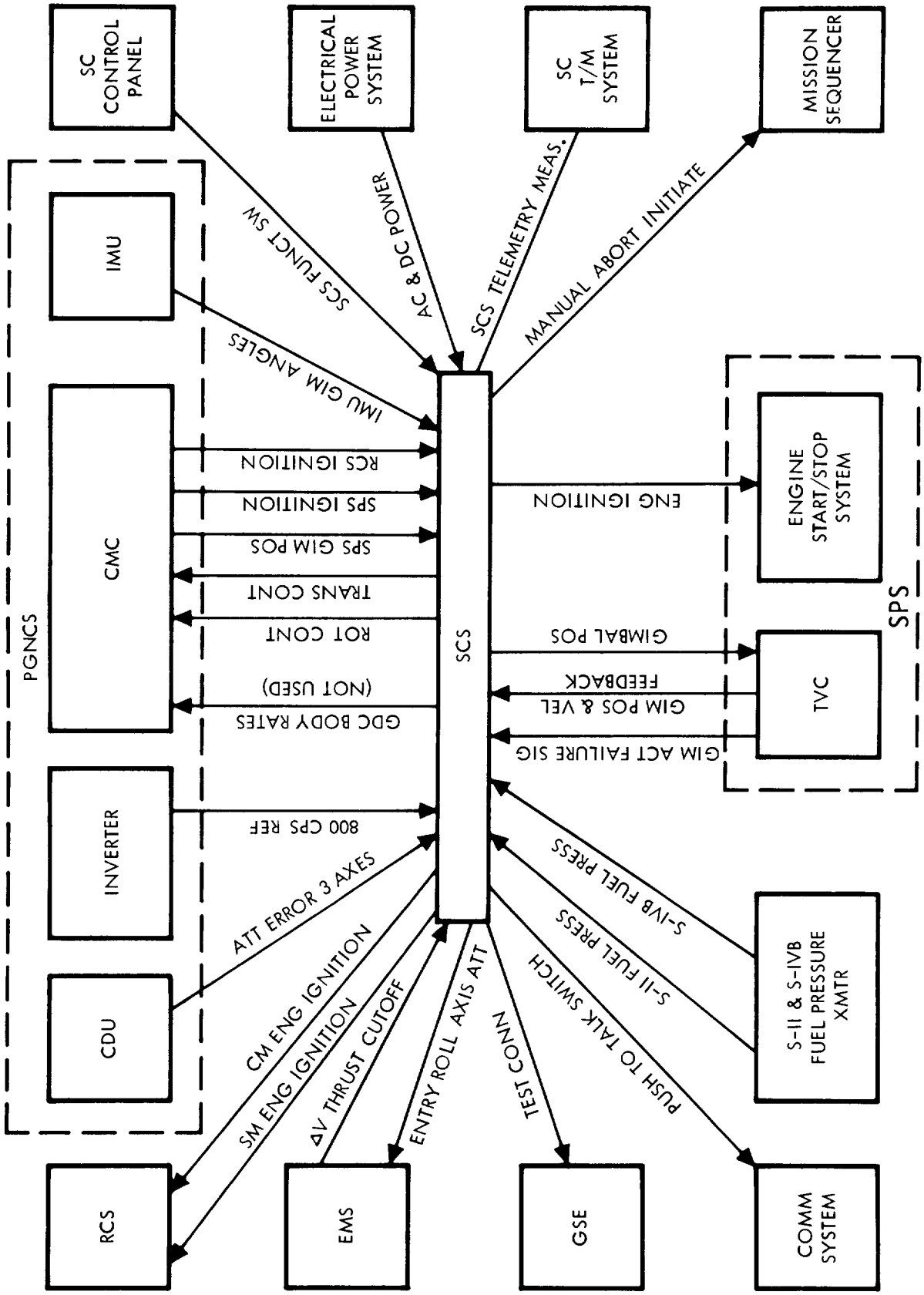

Figure 8-2. SCS Interfaces

strength. The electronic circuitry was isolated from its associated enclosure and the enclosure was electrically continuous to protect against stray electromagnetic fields. The connectors were of a fully developed and qualified conventional design. Soldering and crimping of wire were rigidly controlled by NASA process specifications. The Block II electronic assemblies utilized a unique internal packaging technique. The electrical leads emanating from the electronic piece parts contained within stacked cordwood modules were brought up through holes in the sandwiched Mylar strips. These leads were spotwelded to the matrix conductors on the Mylar sheets, thus improving "lead dress," vibration susceptibility, and volumetric efficiency.

Thermal

The temperature control design of the SCS was predicated upon conduction as the primary mode of heat transfer. The contractor provided thermal coldplates with a coolant temperature range from +55 F to +127 F. To improve heat transfer between the coldplate and an electronic assembly baseplate because of variations in surface flatness, a special high-conductivity grease was utilized between the two surfaces. The maximum generated thermal flux limits were established at 1 watt per square inch average, and 2 watts per square inch peak. Transient heat loads were tolerated provided the thermal capacitance of the equipment was such as to limit the temperature rise of the equipment baseplate in the locality of the hot spot to 5 F over the nominal steady-state value within a time limit of 15 minutes. Entry thermal control requirements specified that equipment required conduction cooling to operate satisfactorily for the last 2-1/2 minutes of the flight operation with a linear coldplate temperature rise from +127 F to +160 F.

Mechanical

The basic mechanical design features of the Block II SCS are described in the following paragraphs.

Packaging Philosophy

Because of the new role established for the SCS as a backup system and because of the Block I humidity problem, the Block II SCS packaging philosophy was completely redefined in mid-1964. Whereas the system electronic assemblies in Block I were physically configured for a rack and panel-type mounting and each end item was functionally configured to essentially a control axis by control-axis arrangement, the Block II assemblies were physically configured to individually bolted-down units and were functionally configured to designs wherein each end item essentially contained a complete stabilization and control function. Because there were no in-flight removable subassemblies, this permitted larger modular assemblies, allowing more

efficient packaging and the use of fewer soldered connections with a significant weight savings. In addition, this concept permitted simplified system checkout and troubleshooting because of the logical separation of functions — each end item was a self-contained functional entity in itself.

Enclosures

The structural coverings or housings for the electronics were fabricated of milled aluminum castings attached to a carefully machined flat aluminum baseplate which served as the heat path for the internal electronic components. A cast and machined aluminum top cover utilizing a gasket seal provided a hermetic seal-type feature. The internal volume was filled with an inert gas to provide the explosion-proofing requirement and the moisture content within the enclosure was carefully controlled to prevent oxidation. Electrical access to the enclosed electronics was provided via standard, hermetically sealed connectors. The number of connectors utilized was dictated by the philosophy that required electrical power, analog/discrete signals, and telemetry/test points to be routed through separate connectors (see Figures 8-3 and 8-4).

Displays

The SCS FDAI's were sealed units fabricated from machined aluminum castings and filled with an inert gas. All dial-face markings, colors, and illumination were rigidly controlled by North American Rockwell specifications. Numerals and letters were Gorton Moderne and Gorton Normal, respectively. The dial faces and certain internal mechanisms were illuminated by electroluminescent lighting operating from single phase, 400 cps power. Dimming features were provided to control light intensity and color standards were assured by use of certification laboratories.

Materials and Finishes

In an effort to standardize and thereby control the many available construction materials and methods of finishing or protecting them, North American Rockwell established, controlled, and imposed on all subcontractors their own materials specification. All materials testing and/or all outside testing was controlled by the contractor for such parameters as fungus-proofing, fire resistance, and outgassing. The only exceptions were when unapproved materials were used in hermetic-sealed enclosures. Several problems were encountered in this area, the most notable the failure to measure flammability characteristics in a 100 percent oxygen environment at pressures above atmospheric. Another problem centered around the inability of the contractor to evaluate new materials submitted by the subcontractor and notify him in a timely manner.

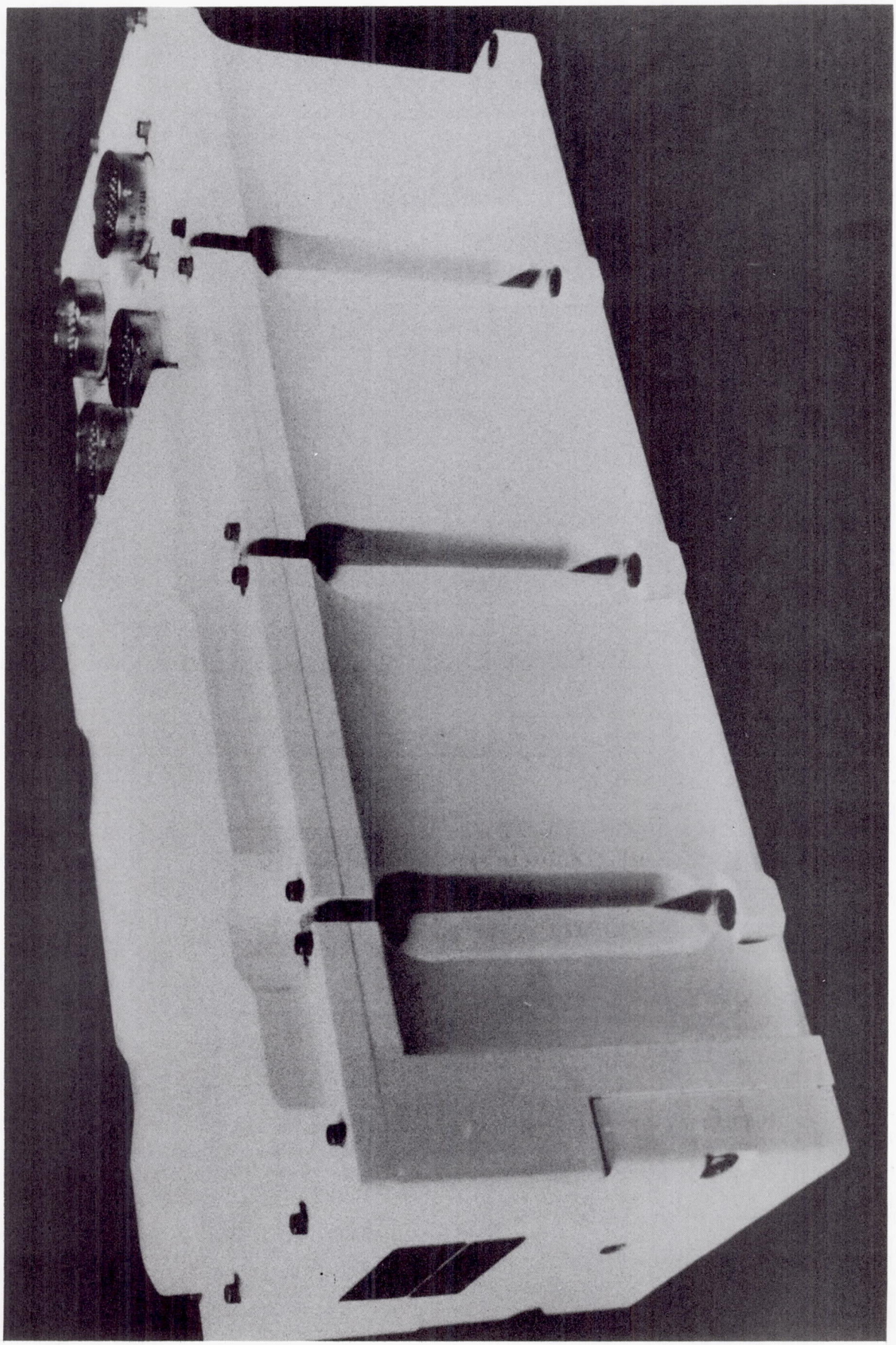

Figure 8-3. Electronic Control Assembly

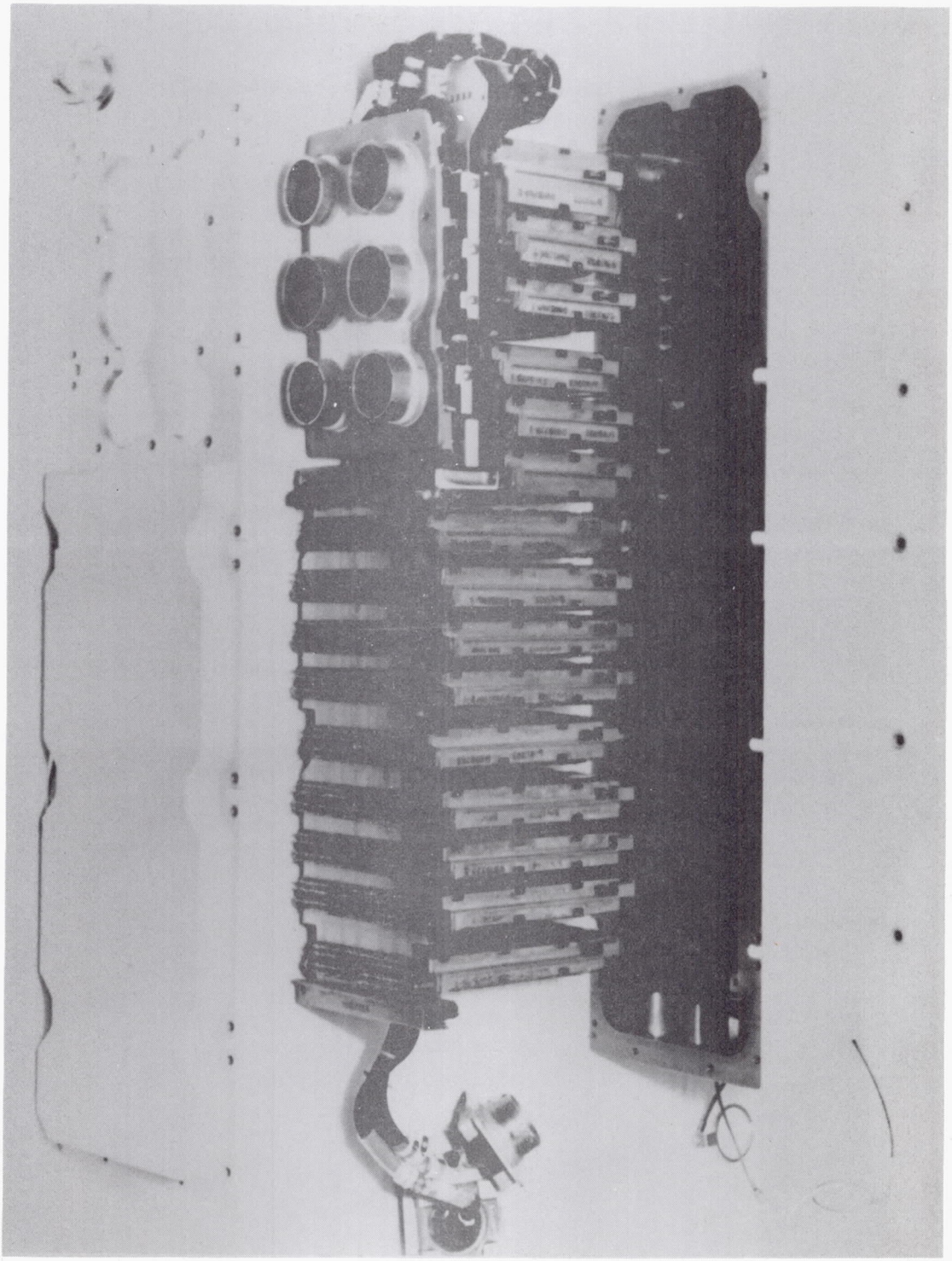

108RE14156

Figure 8-4. Exposed Electronic Assembly

Weight

A noted weight improvement was effected between the Block I SCS (approximately 239 pounds) and the Block II SCS (approximately 195 pounds). Most of this saving can be attributed to the deletion of the in-flight test and maintenance concept which required more modules and internal connectors.

Growth

As in most systems, the Apollo SCS provided for a volumetric growth potential of 10 percent of the initial estimated volume of the electronic assemblies only. As is normally the case, much of this growth volume has already been utilized in making late changes. Future programs should allocate at least this much growth potential to preclude major redesigns so that advances in the technology or other minor system improvements can be made during the evolution of the system.

Electromagnetic Interference

The basic criteria utilized in the electromagnetic (EMI) design of the SCS to suppress EMI generation and susceptibility may be summarized as follows:

1. Wire routing or "lead dress" was carefully considered in the design of each CEI. Power circuits were purposely routed away from and at right angles to sensitive signal circuits wherever possible.

2. Power and signal ground circuits were separated and isolated from the chassis. Signal grounds were accumulated at one point in the SCS and brought out to the vehicle "holy ground" point.

3. Sensitive signal circuits utilized twisted pair wiring and shielding as necessary.

4. Power circuits utilized twisted lead wiring.

5. Where possible, an attempt was made to use adjacent connector pins for signals and signal returns.

6. Use was made of electrostatic shields around power transformers.

7. Diode arc suppression on relay coil circuits was utilized.

8. Provisions were made and space was allocated for the inclusion of power line filters.

9. The CEI enclosures were made electrically continuous.

These basic EMI design criteria resulted in a system that was relatively free from both generated noise and any susceptibility to it. This was achieved in Block II by assigning an EMI expert to the subcontractor's facility on a temporary basis during the initial design phases of the program.

CONFIGURATION CONTROL REQUIREMENTS

Configuration control for a hardware-oriented program is perhaps the most important aspect of any program and the one element of a program that is most consistently violated. It is a subject concerned with the basic problem of establishing requirements, building hardware to these requirements, and controlling all changes thereto. When dealing with a subcontractor, as in the case of the SCS, it is even more important to a program's success than when dealing with in-house organizations.

The Block II SCS procurement was predicated on the philosophy that North American Rockwell would concept the system and specify the detail performance requirements. Some of the rigors of NASA configuration control document NPC 500-1 were imposed. In addition to the normal elements of configuration identification and accounting, changes were brought under control. A system concept was baselined at the preliminary design review (PDR) and all Class I changes thereafter were controlled by a formal change control system. At the critical design review (CDR), which occurs at the 90 percent drawing release point, the detail design was reviewed for compliance with the requirements of the contractor's procurement specification. Again, any Class I changes required were handled via the formal change control system. At the completion of the first deliverable system for flight, a first-article configuration inspection (FACI) was held. This review verified that the "as built and as tested" hardware met all specification requirements that testing would permit. Deviations, if any, were reviewed and either agreed to or the hardware was fixed and retested. This system of configuration control permits a logical and ordered evolution of a subsystem wherein all participants in the design process work to the same ground rules, design to the same system concept, know when changes that would affect their efforts occur, and where management has the leverage and visibility to control the effort.

QUALITY ASSURANCE REQUIREMENTS

The Apollo SCS quality assurance program was conducted under the aegis of NASA documents NPC 200-2 and NPC 200-3. These requirements, together with the subcontractor's and contractor's quality plans, provided the application of quality controls and assurance techniques from the beginning of the design process through procurement of materials, manufacture, assembly, acceptance and qualification testing, packaging, shipping, and finally installation checkout of the system in the spacecraft. The major areas of quality control and assurance were design quality controls, procurement control, control of fabricated articles, training and certification of personnel, and testing.

Design Quality Controls

Quality control participation in design activities provided a means for transmittal of specific Apollo quality requirements to the design engineers at an early stage of product development. Design Engineering was thus assured that quality personnel were aware of the design control requirements specified and that these requirements would be reflected in the quality-control procedures at the earliest possible time.

Procurement Control

To assure that the quality and reliability requirements of the Apollo program were achieved on all purchased materials, supplies, and services, an Apollo procurement system was established. This included a procurement document review to identify and specify all applicable quality requirements, vendor selections based on a supplier's capability to meet article specifications, quality history, and/or a survey report, and a vendor quality system. The procurement system also included source inspection where an item could not be adequately and economically inspected on receipt or where it affected safety, performance, interchangeability, or service of the final product; receiving inspection on all items purchased; and a vendor correlation program to assure early and continuous coordination and correlation of manufacturing, inspection, and test equipment and procedure problems as well as malfunctions, discrepancies, and failures of purchased components.

Control of Fabricated Articles

The control of fabricated articles during the manufacturing process was effected through the use of production flow diagrams for each subassembly, component, and system wherein inspection test points were determined. Inspection procedures were written to document the requirements at each checkpoint. Defect analysis and corrective action were accomplished

through a failure analysis system. Lot control and serialization control of parts were utilized to maintain identification and traceability of materials and articles through the fabrication stage. Because of the critical nature of the SCS, the necessity for controlled cleanliness dictated the need for cleanroom facilities which were periodically inspected for dust contamination, temperature, and humidity. There was also periodic inspection for adherence to specified personnel apparel, product containers, cleaning procedures, permissible supplies, etc.

Training and Certification of Personnel

A formal training program was given to selected personnel who would be responsible for the determination of product quality on the SCS program. These personnel were subjected to course work such as product familiarization, test equipment familiarization, an introduction into the processing and manufacturing techniques conceived for the Apollo Program, training in special inspection techniques, a review of quality control methods and systems utilized by the employer, training in the basic elements of statistical quality control, training in special manufacturing processes, and testing of proficiency in the above.

Certification of personnel in welding, soldering, and wiring were required of all personnel involved in these activities.

Testing

Testing of the SCS was the culmination of the quality assurance program. It was here that concepts, requirements, design, and materials merged into the final product which would then be demonstrated. The total testing effort can be broken down into four distinct categories: development tests, qualification tests, acceptance tests, and installation checkout tests.

Development Testing

The development tests were a series of functional, environmental, and engineering evaluation tests conducted on materials, parts, and components to determine the suitability of the items for incorporation in the SCS to determine their performance characteristics and to evaluate and improve designs. These tests included such activities as:

1. Determination of part, component, and subassembly characteristics

2. Comparative tests to aid in the selection of materials and parts

3. Evaluation in terms of critical environment including anticipated or unknown amplification factors due to the particular application

4. Determination of performance stability or repeatability

5. Evaluation of changed or improved designs

6. Design margin tests

7. Parameter variation tests.

The subcontractor was authorized five complete engineering systems in both Block I and Block II to develop flyable configuration hardware. In Block I the contractor attempted to enforce configuration control on these development systems. In retrospect, this concept was not useful to the program, helpful to the subcontractor, or even practical from a design standpoint. On Block II it was abandoned as a viable method to develop a system; instead, the more orderly approach of establishing a design baseline followed up with formal design reviews was instituted.

Qualification Testing

The qualification tests were a series of performance and environmental tests conducted on production piece part, end item, and system hardware to demonstrate that the items met all applicable requirements of design and performance.

Materials were qualified by the contractor and listed in an approved materials specification which the subcontractor utilized. Where new materials were selected, the subcontractor conducted these tests and submitted both test results and samples of the material to the contractor for approval. Electronic piece parts were procured from vendors by means of ridigly controlled high-reliability part specifications. Each specification contained a section that delineated the testing requirements for these parts. This included the following sequential series of tests:

1. 100 Percent Processing Tests - Visual inspection, high temperature, constant acceleration, temperature cycle, gross and fine leak tests, particle detection, burn-in, and X-ray.

2. Group A Acceptance Tests - Group A 100 percent tests, visual inspection, mechanical inspection, and basic electrical parameters. Group A sample tests included high-temperature leakage, low-temperature gain, offset voltage, and dynamic resistance.

3. Group B Lot Integrity Tests - Visual inspection, mechanical inspection, solderability, temperature cycling, thermal shock, moisture resistance, shock, vibration, constant acceleration, terminal strength, salt atmosphere, high-temperature life, and 1000-hour operating life test.

The qualification testing of completed end items and the system was divided into two major areas: design proof tests, system life tests. The design proof tests were climatic and dynamic environments imposed on one each of an operating end-item to specification limits. The system or mission life tests were exposures of one complete complement of operating end items (or a system) to first vibration and then a salt fog atmosphere. All of these tests were preceded by a checkout test to establish baseline performance data and then the environments sequenced to optimize time and facilities utilization. Performance data was taken during and after these tests to demonstrate that the SCS met all the applicable requirements of design and performance and to ascertain that no serious design weaknesses exist that could cause inconsistent or marginal performance or high probability of failure.

Acceptance Testing

Acceptance of completed SCS hardware by the contractor required that acceptance tests, both at the end-item and system levels, be successfully accomplished prior to shipment. Successful accomplishment was defined as a Quality Control-witnessed test conducted with a contractor-approved acceptance test procedure (ATP) wherein all test parameters measured fell within the specified tolerance limits. Parameters which were outside of these tolerance limits could be submitted as a waiver request which required contractor approval prior to shipment of the hardware. The ATP's specified the detailed steps which the test operator must perform in the conduct of the test, the configuration of the test articles, and any test equipment used to perform the test. They detailed the step-by-step settings to be made, the readings to be taken, the acceptable limits for each reading, and instructions for recording data. The data sheets on which these data were recorded were made a part of the end-item data package which accompanied each end item and system throughout its service life.

Installation Checkout

As envisioned early in the Apollo Program, all hardware received from the subcontractor would undergo a receiving inspection test at the contractor's facility. Prior to the receipt of the initial hardware, however, this concept was abandoned and arriving hardware was installed directly into the spacecraft. The role of the contractor was to demonstrate through

test the continued functional and performance capability of the system when mated physically and electrically with actual spacecraft interfacing systems. The basic philosophy adopted for these tests was, first, to verify that the system itself operated properly in the spacecraft structure and with spacecraft power applied via the spacecraft interconnecting wire harness. All functions and modes were exercised to established performance requirements within allowable tolerance limits. Second, electrical and functional interface compatibility between the given system and the interfacing systems was to be demonstrated. These tests demonstrated polarity, phasing, switching, scaling, and gain compliance to the Apollo requirements.

NASA-supplied automatic checkout equipment (ACE) was utilized for testing all spacecraft systems. This ACE hardware had the capability to inject stimuli and accept signal-conditioned readouts for a large number of systems simultaneously. This precluded the normal troubleshooting techniques of past programs wherein each system had its own time on the vehicle and its own test consoles with their capability for stimuli, readout, and numerous test points for probing suspected trouble areas.

Test Tolerances

Test tolerances utilized in acceptance-test documents to accept finished hardware represents an area of the design process which has not generally been given the attention it properly deserves. Those tolerances are normally the sole criteria and the only tangible evidence offered to a buyer that the accepted hardware will, in fact, meet the requirements imposed on it. Most equipment requirements specify that the hardware will perform in some given manner, over a specified service life, and when exposed to stated environmental extremes. The acceptance-test demonstration of these requirements usually omits the service life and environmental parameters and concentrates on the performance aspects by conducting tests which yield results that are adjudged by a set of go-no-go values or tolerance limits. How these tolerance limits are established and what rationale is used to generate them is generally unknown.

Traditionally, test tolerances have been generated in one of several ways. One method merely utilizes a fixed or variable percentage above and below the nominal value. Another method is the use of worst case values. This technique is more rigorous but overly conservative with regard to stochastic quantities. Few designs can afford the weight and cost penalties associated with this concept. Still another, and currently more popular method, is the RSS technique. This system is more statistically rigorous than the worst case method in that all error sources and their probable range of error are identified. However, the amount of probability associated with this error range is assumed to be associated with a normal

distribution. One could argue that, in the average item of hardware being tested, there are many individual and uncorrelated piece parts with perhaps unknown error distributions (probability density functions), but that the net summation of these stochastic quantities when working together tends toward a normal or Guassian distribution of error for the total signal path under test. This is approximately true except that one cannot then accurately specify the amount of probability contained between the upper and lower test limits. However, this is precisely what is required from a test program. To eliminate these omissions and to establish a set of tolerance limits that is supported by a mathematically rigorous process, the Apollo SCS subcontractor developed a tolerance analysis program that would account for all of the aforementioned factors.

This tolerance analysis program (TAP) determined a set of end-item acceptance test tolerances which would guarantee that the end-of-life requirements on the SCS were met at all times. In addition, each tolerance was supported by a mathematical derivation of how it was obtained and showed the allowances made for manufacturing tolerances, age, environment, and test equipment. To determine the various tolerances, system performance was traced back to the performance of each piece part within the SCS and the appropriate "sensitivities" associated with those piece parts were obtained. The effects of manufacturing tolerances, age, and environment on each piece part were used to statistically predict the effect on the system from each source. This system effect was then compared with the requirement to determine if satisfactory end-of-life performance could be expected (probability of performance within the requirement of 0.997 was deemed satisfactory). If it could not meet the requirement, tighter test tolerances were used to modify the statistical prediction (narrow the selection of acceptable systems) until the requirement was met. The following summarizes the salient features of this program:

1. Probability density functions (PDF) were obtained for each piece part in the SCS from manufacturer's data, in-house data, etc.

2. Analyses were performed to obtain performance and sensitivity equations and use was made of the convolution process.

3. The service-life cycle of each specification requirement was simulated on a digital computer using the sensitivity equations and convolution. The PDF's were accurately combined (convolved) and the errors from the various sources were iterated until the resultant test tolerances guaranteed that the mission-time-extreme-environment requirements would be met with a probability of 0.997.

The sensitivity analysis effort was performed in two steps: first, to obtain circuit (building block) performance in terms of piece parts; and second, to obtain system (performance path) performance in terms of building blocks and hence performance path (system) performance in terms of piece parts. The primary reason for using sensitivity analysis (first-order terms of a Taylor's series expansion of performance equations which describe the building block or performance path) is that the exact performance equations, although attainable in theory, are too difficult to deal with in practice. The sensitivities (Taylor's coefficients evaluated at nominal values) can be easily obtained with a computer without having an explicit performance equation for the parameters—having the hardware described by a system of equations (e.g., node or loop equations) is quite enough.

This sensitivity analysis process is best described in mathematical form as follows:

Let

$$Z = f(X_1, X_2, ''', X_n) \text{ be a performance equation} \tag{1}$$

where

Z = circuit or performance path output

X_i = i^{th} component contributing to performance of the circuit or performance path

and

$$Z_o = f\Big|_{\text{nominal}} \text{ be the function evaluated at its nominal value} \tag{2}$$

where

o subscript denotes nominal value.

Hence

$$dZ = \left(\frac{\partial f}{\partial X_1}\right)_o dX_1 + \left(\frac{\partial f}{\partial X_2}\right)_o dX_2 + ''' + \left(\frac{\partial f}{\partial X_n}\right)_o dX_n =$$

$$\sum_{i=1}^{n} \left(\frac{\partial f}{\partial X_i}\right)_o dX_i \tag{3}$$

and

$$\frac{dZ}{Z} = \left(\frac{\partial f}{\partial X_1} \cdot \frac{X_1}{f}\right)_o \frac{dX_1}{X_1} + \left(\frac{\partial f}{\partial X_2} \cdot \frac{X_2}{f}\right)_o \frac{dX_2}{X_2} + \ldots + \left(\frac{\partial f}{\partial X_n} \cdot \frac{X_n}{f}\right)_o \frac{dX_n}{X_n} \tag{4}$$

or

$$\frac{dZ}{Z} = \sum_{i=1}^{n} \left(\frac{\partial f}{\partial X_i} \cdot \frac{X_i}{f}\right)_o \left(\frac{dX_i}{X_i}\right) \tag{5}$$

where

$\frac{dZ}{Z}$ = relative error of Z or the PDF of Z

$\left(\frac{\partial f}{\partial X_i} \cdot \frac{X_i}{f}\right)_o$ = sensitivity of Z to X_i evaluated at nominal conditions

$\left(\frac{dX_i}{X_i}\right)$ = relative error of X_i or the PDF of X_i.

The terms $\left(\frac{dX_i}{X_i}\right)$ are stochastic quantities (i. e., they are not deterministic) and as such must be represented by either a frequency distribution or a probability density function (PDF). It will be noted that these terms are summed (Equation (5)) and the mathematical process of finding the PDF of the sum of random variables is known as convolution. For example, let X and Y be two independent random variables whose individual values are represented by x and y, respectively, and whose probability density functions are f(x) and g(y), respectively. Form the stochastic sum

$$Z = X + Y$$

Z is also a random variable whose individual values can be denoted by z and whose probability density function can be denoted by h(z). It is desired

to find the PDF h(z) from the PDF's f(x) and g(y). The process for finding h(z) is called convolution and is normally symbolized by

$$h(z) = f(x) * g(y).$$

For continuous variables this is written in integral form as

$$h(z) \Big|_{-\infty}^{\infty} = \int_{-\infty}^{\infty} f(x)\, g(z - x)\, dx$$

A computer program was prepared to store data and execute the calculations indicated above. The goal of this program was to establish test tolerances for the end items which would guarantee that the system would meet all specification requirements. To make this guarantee, it was necessary to make allowances for the effects of interchangeability (manufacturing tolerances) of end items, aging, environment, and tester errors. In addition, the rejection rate for each of the end-item tests was predicted (i. e., the yield the manufacturer could expect from completed end items was predicted).

One of the major concerns in any program is the confidence level attained by those who must make the judgment that a system is flight ready based on test results. Perhaps no quantitative measure will ever instill a confidence level of 100 percent. However, the convolution technique offers a means whereby a quantitative value can be generated which would, perhaps, assist in this process. This calculated quantity has been coined the "Acceptance Probability Density Function" and represents the combined probability density of the hardware being tested and the test equipment utilized to test the hardware. In effect, this PDF eliminates the uncertainty in test results because of the masking effect of the test equipment. From this PDF, one can read out the probabilities of good hardware being accepted and rejected and the probabilities of bad hardware being accepted and rejected. From these quantities, one may ascertain the probability that accepted hardware is, in fact, good—this is a measure of confidence in the test results.

An example may better illustrate this point. Assume f(x) and g(e), as shown below, to be uniform PDF's of the hardware and the tester, respectively. Further, assume the specification limits for good hardware to be U = 0.04 (upper limit) and L = -0.05 (lower limit)

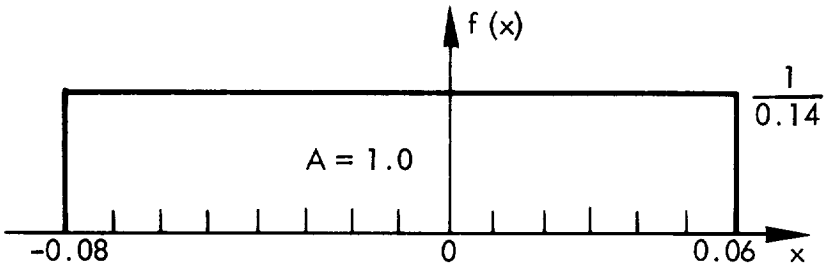

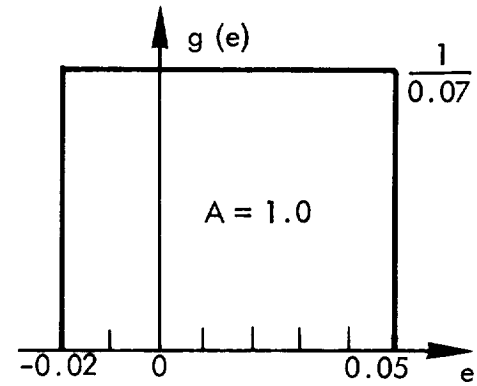

When convolved these PDF's yield the Acceptance Probability Density Function a(x) shown below:

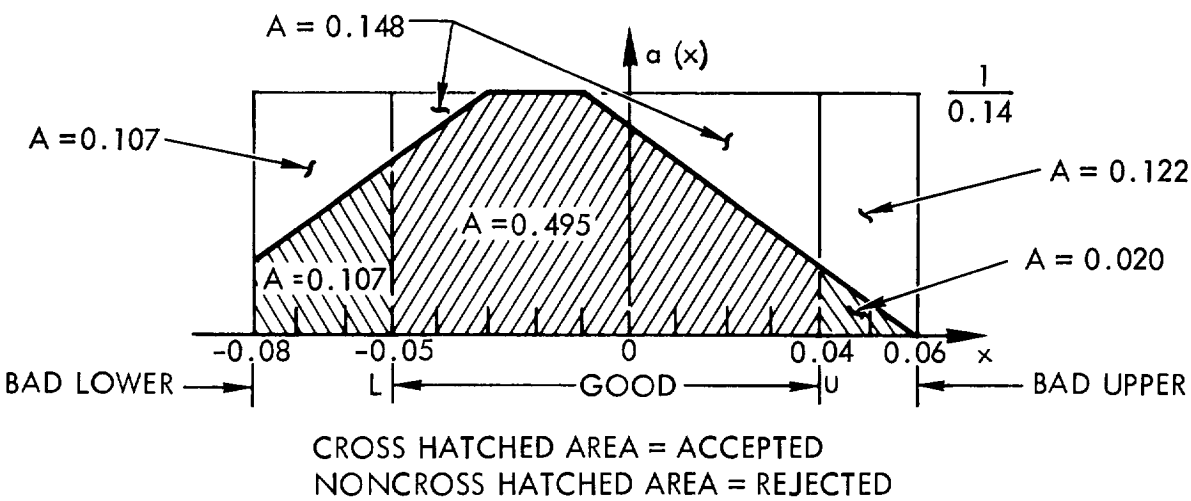

The corresponding acceptance and rejection probabilities are tabulated below:

Items	Accepted	Rejected	Total
Good	0.495	0.148	0.643
Bad (upper)	0.020	0.122	0.143
Bad (lower)	0.107	0.107	0.214
Totals	0.622	0.378	1.000

A measure of confidence level may be calculated as:

$$P\{\text{accepted unit is good}\} = \frac{P\{\text{good units accepted}\}}{P\{\text{accepted units}\}}$$

$$= \frac{0.495}{0.643} = 0.769$$

This states that there is a 76.9 percent probability that all of the units accepted are, in fact, good units.

PROBLEMS

Materials Flammability

Initially there was a failure to measure materials flammability characteristics in a 100 percent oxygen environment at pressures above atmospheric. The solution was materials testing under ground checkout conditions and to change spacecraft materials which did not meet these requirements.

Thermal Conduction

The flatness of the electronic assembly baseplate was not sufficient to provide good thermal conduction with the coldplate. The solution was to provide a tighter and more definitive flatness requirement and develop a better application of thermal grease. The initial method of grease application left spaces between the two surfaces after the assembly had been clamped down. A grease-application procedure was developed that provided for the grease to smear during application of the clamp-down pressures.

Service Life

The original service life requirements for the SCS were specified as 1000 hours of ground checkout and 400 hours for flight. These values were based on the best estimates available at the time. The 400 hours for flight represent a typical 14-day lunar mission which is still a good estimate. However, the 1000-hour ground checkout estimate has proven to be too small.

The subcontractor normally consumes between 300 to 400 hours prior to end-item selloff considering that power is applied to lower level assemblies and each subsequent higher level subassembly through end item selloff. The contractor then proceeds to conduct system and combined systems tests both

at the manufacturing facility and at the launch facility. It became evident that the system must be qualified to a higher than specified service life. This requalification process has begun with a goal of 9500 hours. To date, the testing is about one-half completed with no significant failures or performance degradations apparent.

CONCLUSIONS

The following conclusions summarize the more important fallouts occurring during the SCS hardware design and development process:

1. Establish firm baseline functional and performance requirements before the start of the hardware design process. This will preclude many changes, provide better configuration control, and materially reduce design and development costs.

2. Extend system qualification life testing to hardware wearout. This provides a measure of confidence that the infant mortality point has been passed and what reasonable service life one can expect from the hardware as designed.

3. Provide a house vehicle which is at all times maintained in a current configuration to investigate interface, functional, performance usage, and operational problems. This will minimize surprises during the initial operational phases of a program.

9.0 TECHNICAL CONTENT SUMMARY

This section provides a summary listing of the report highlights. The page numbers after each item refers to the item's location in the body of the report.

- Environmental and performance requirements as related to hardware design:

	Page
Total system	9, 110
Attitude reference subsystem	25
Thrust vector control subsystem	42
Attitude reference subsystem	58
Entry control subsystem	74
Controls and display subsystem	90

- Tradeoffs and design decisions:

In-flight maintenance	10
Reference subsystem tradeoffs and decisions	26
Hydraulic versus electromechanical actuator	51
Reaction jet size	75

- Failure, malfunction, and near-miss incidents:

Electric connectors	13
Single-point failures	14

- Unique problems encountered, and how solved or circumvented:

±50 percent clutch gain variations	47
Body bending data variation	48
Effect of low-g propellant slosh	66

- New concepts and hardware that evolved:

Pseudo-rate feedback	57
Attitude gyro coupling unit	25
Manual TVC	42
Magnetic clutch actuator	41
Tolerance analysis	124
Voltage sensitive one-shot	66

- Major design changes and evolution:

	Page
Block I - Block II	18
TVC redesigns	48
Manual TVC	42

- Major design changes "if one had it to do over again":

Establish baseline requirements	131
Incorporate built-in redundancy with hermetic seals initially	20
Utilize standard connectors	20
Develop single-point failure analysis methodology	20
Less-sensitive TVC design	52
Better method of obtaining vehicle data	52
Obtain firm specification for crew personal-preference items	100
Provide house spacecraft	131
Qualify system for longer service life	131

- Unforseen performance restrictions:

Time constraints on alignment and maneuver times	33
Deleted Block I boost abort requirement in SCS mode	48

BIBLIOGRAPHY

1. Preliminary study: Thrust Vector Control System for Apollo Service Module Propulsion System. NR SD, SD 62-1220 (21 Sept. 1962).

2. Linear Stability Analysis of the Block II Backup TVC Autopilot. NR SD, SD 66-342 (13 April 1966).

3. Attitude Reference Study Apollo Stabilization and Control System Subcontractor. Honeywell, A62-777A9(1) (2 July 1962).

4. Stabilization and Control Subsystem. NR SD, Procurement Specification MC 901-0594E (25 May 1967).

5. CSM Technical Specification, Block II. NR SD, SD 64-1344B (May 1968).

6. CSM Master End Item Specification, Block II. NR SD, SD 64-1345 (Feb. 1965).

APPENDIX A

SCS HAND CONTROL DESIGN REQUIREMENTS

CONTROL, TRANSLATION (T/C)

The translation control shall incorporate the following in its design:

1. Locking device - Provide an index-finger actuated mechanical lock to prevent inadvertant actuation of translation commands, which is equipped with a visual indication denoting locked condition. The locking mechanism shall not lock out CW or CCW handle motion.

2. Connecting cable - Provide an interface with the spacecraft wiring by means of a connector installed at the terminal end of a control cable.

3. Actuation - The translation control force and displacement characteristics and nominal switch actuation points shall be as shown in Figure A-1. The rotary displacement of the control handle, measured from the null (center) position, shall be 17 ± 2 degrees and shall require a torque of 15 ± 5 inch-pounds. The breakout torque shall be 6.0 inch-pounds nominal. At the point of switch actuation the internal torque on the handle shall drive the handle toward the, full rotary displacement position. The switches shall be in an actuated condition when the handle is in the full rotary displacement position. An applied torque of 15 ± 5 inch-pounds shall be required to rotate the handle out of the full rotary displacement position to return it to center.

CONTROL, ROTATION (R/C)

The rotation control shall be a center-pivot operated grip control with control motion analogous to the desired vehicle rotation as a design goal. The controller shall satisfy the following requirements:

1. Controller forces - The torque versus degrees deflection shown in Figures A-2, A-3, and A-4 represent the required force characteristics in pitch, roll, and yaw axes, respectively. These characteristics include breakout, gradient, soft stops, and maximum forces.

When measured in an increasing force direction, the force shall meet the force versus displacement requirements of Figures A-2, A-3, and A-4 within the displacement tolerances of Figure A-5. When measured in a decreasing force direction, the force shall not be less than 55 percent of the force measured in the increasing force direction.

2. Control deflections - The total deflection for pitch, roll, and yaw shall be as shown in Figure A-5. The soft stops shall be encountered at ±10 degrees and the hard stops at ±11.5 degrees in all axes.

3. Controller axes - The axes shall be as shown in Figure A-6. They are pitch pivot at palm of hand, yaw pivot through hand perpendicular to pitch pivot, roll pivot 4.0 inch below pitch pivot.

4. Controller axes relative location

   a. Controller axes versus pilot axes - The controller axes, as shown in Figure A-6, at their installed position, shall be aligned relative to the corresponding pilot labeled vehicle axes so that the input axes are obvious.

   b. Controller axes versus centerline of armrest - The normal position of the yaw axis shall be such that the vertical angle between this axis and the centerline of the armrest is 110 degrees ±5 degrees to allow for normal positioning of the hand.

5. Direct and pulse mode switches - These switches shall be actuated at the control travel given in Figure A-5. There shall be one switch closure provided for in each polarity of each control axis.

6. Emergency direct mode switches - These switches shall be provided in each polarity of each control axis. They shall be actuated between the soft and hard stops at the control travel given in Figure A-5.

7. Hand grip - The desired hand grip shape shall be as shown on Drawing MSC SD-AE-000681, Revision C (Apollo Control Handle). This number is identical to Honeywell SK 87987.

8. Press-to-talk switch - This switch shall be a hermetically sealed, momentary contact switch capable of switching 28 vdc into a 250 ma resistive load. The press-to-talk switch shall be located for index finger actuation on the forward centerline of the grip as viewed by

the astronaut. The press-to-talk switch actuating force and travel characteristics shall be as follows:

a.	Travel prior to switch actuation	5 degrees minimum
b.	Travel past switch actuation	8 degrees minimum
c.	Travel to hard stop	25 degrees maximum
d.	Torque at breakout	0.2 pound-inch minimum
e.	Torque to reach hard stop	1.0 pound-inches maximum

9. Locking device - A quick release locking device, which is equipped with a visual indication denoting locked condition, shall be provided to prevent accidental activation of the rotation control.

10. Connecting cable - Interface with the spacecraft wiring by means of a connector installed at the terminal end of a control cable shall be provided.

11. Mechanical strength - The control shall withstand without significant effects, the indicated forces applied in the manner and under the conditions stated below:

    a. Normally or inadvertently locked configuration:

        (1) A force of 200 pounds, in either direction, applied through the pitch axis and parallel to the forearm.

        (2) A force of 150 pounds applied in any direction through the intersection of the pitch and yaw axes.

        (3) A torque of 130 pound-inches applied in either direction about an axis parallel to the forearm and through the intersection of the pitch and yaw axis.

        (4) A torque of 200 pound-inches applied in either direction about the pitch axis and about the yaw axis.

    b. Unlocked configuration:

        The same forces and torques applied as in (a) above except that a(4) should be changed to read, "A torque of 300 pound-inches applied in either direction about the pitch axis and 250 pound-inches applied in either direction about the yaw axis."

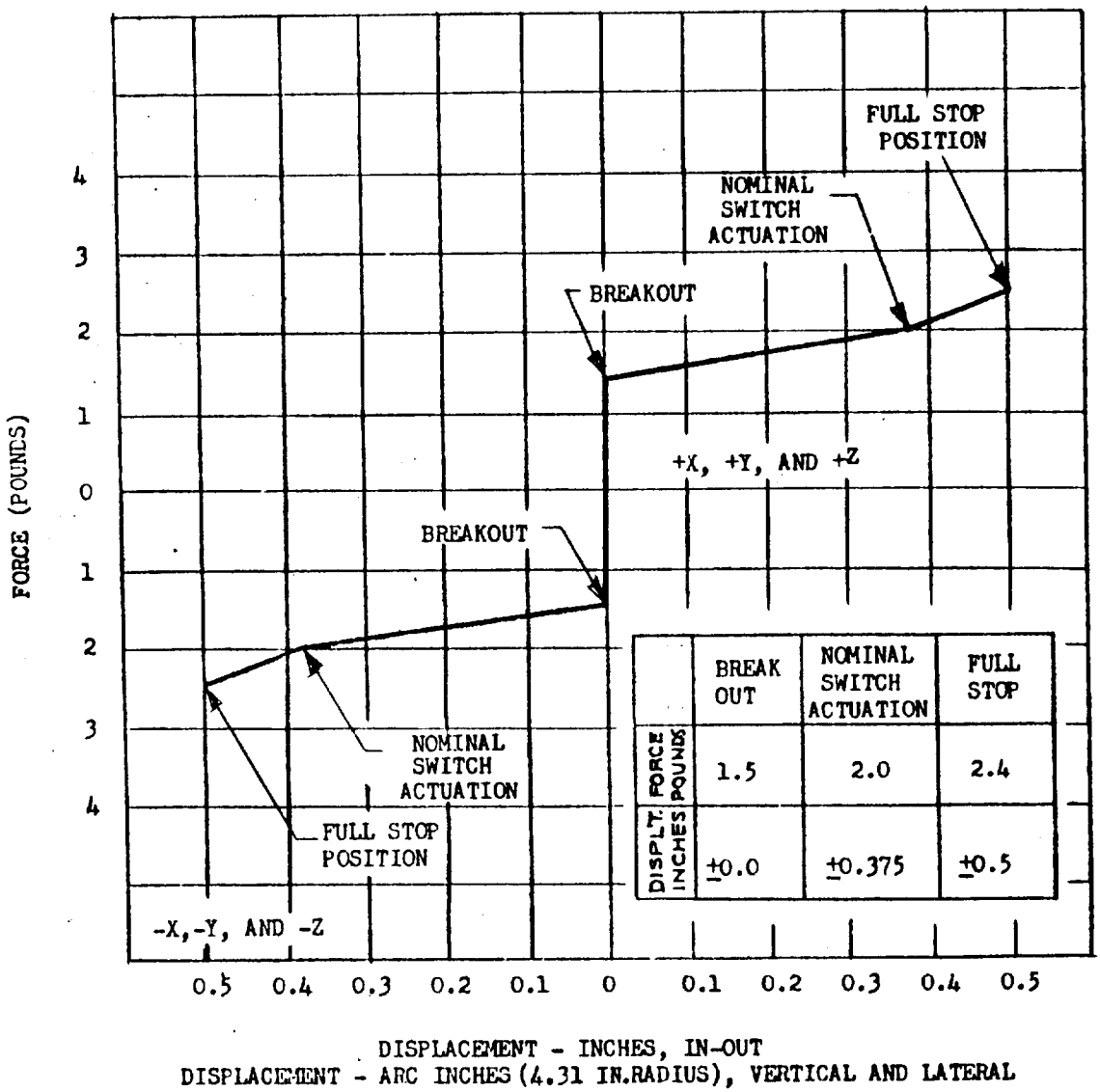

	BREAK OUT	NOMINAL SWITCH ACTUATION	FULL STOP
FORCE POUNDS	1.5	2.0	2.4
DISPL'T. INCHES	±0.0	±0.375	±0.5

Figure A-1. Translation Control, Displacement Versus Forces—Vertical, Lateral, and In-Out Motion

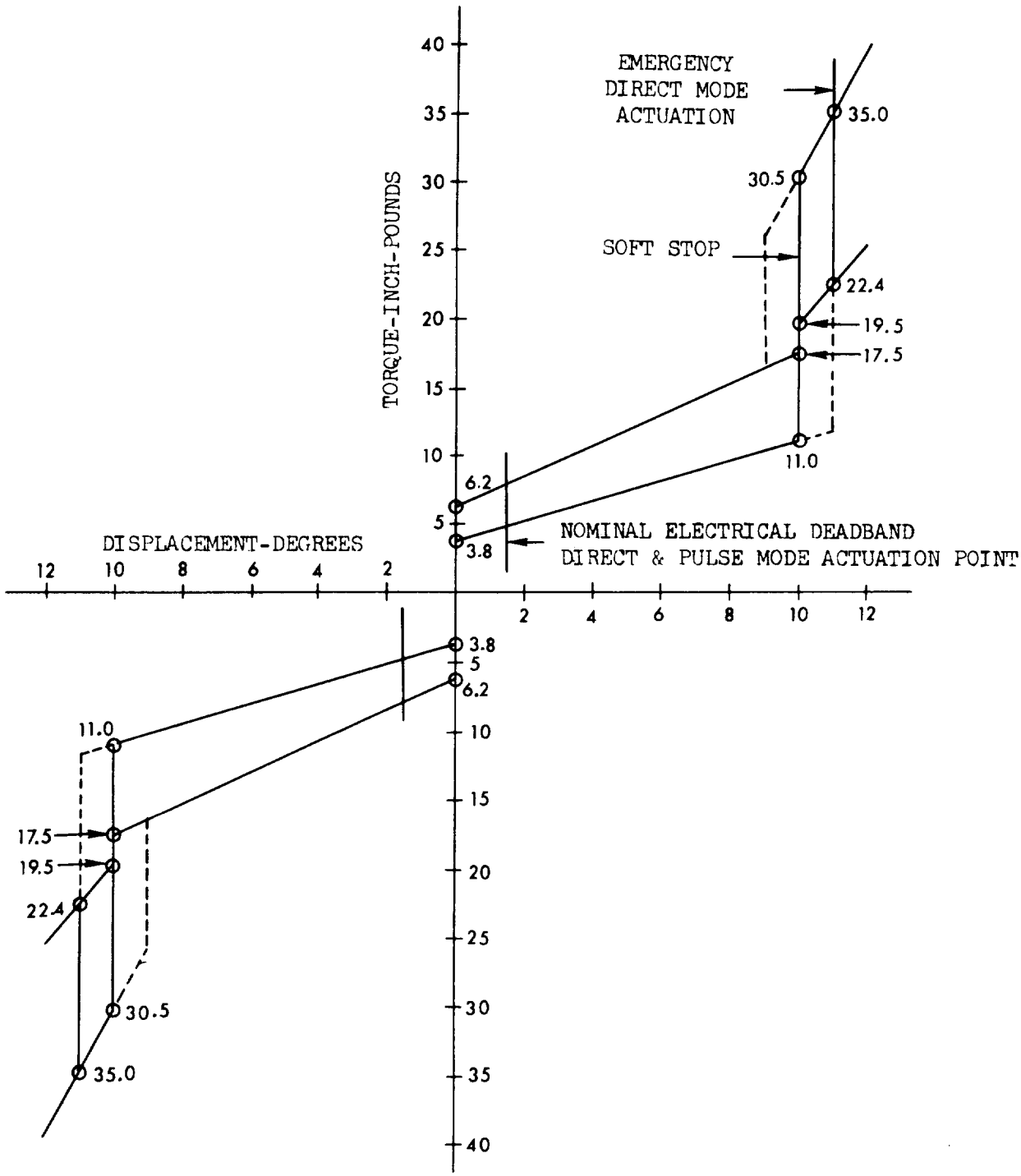

Figure A-2. Rotation Control Torque Versus Displacement (Roll Axis)

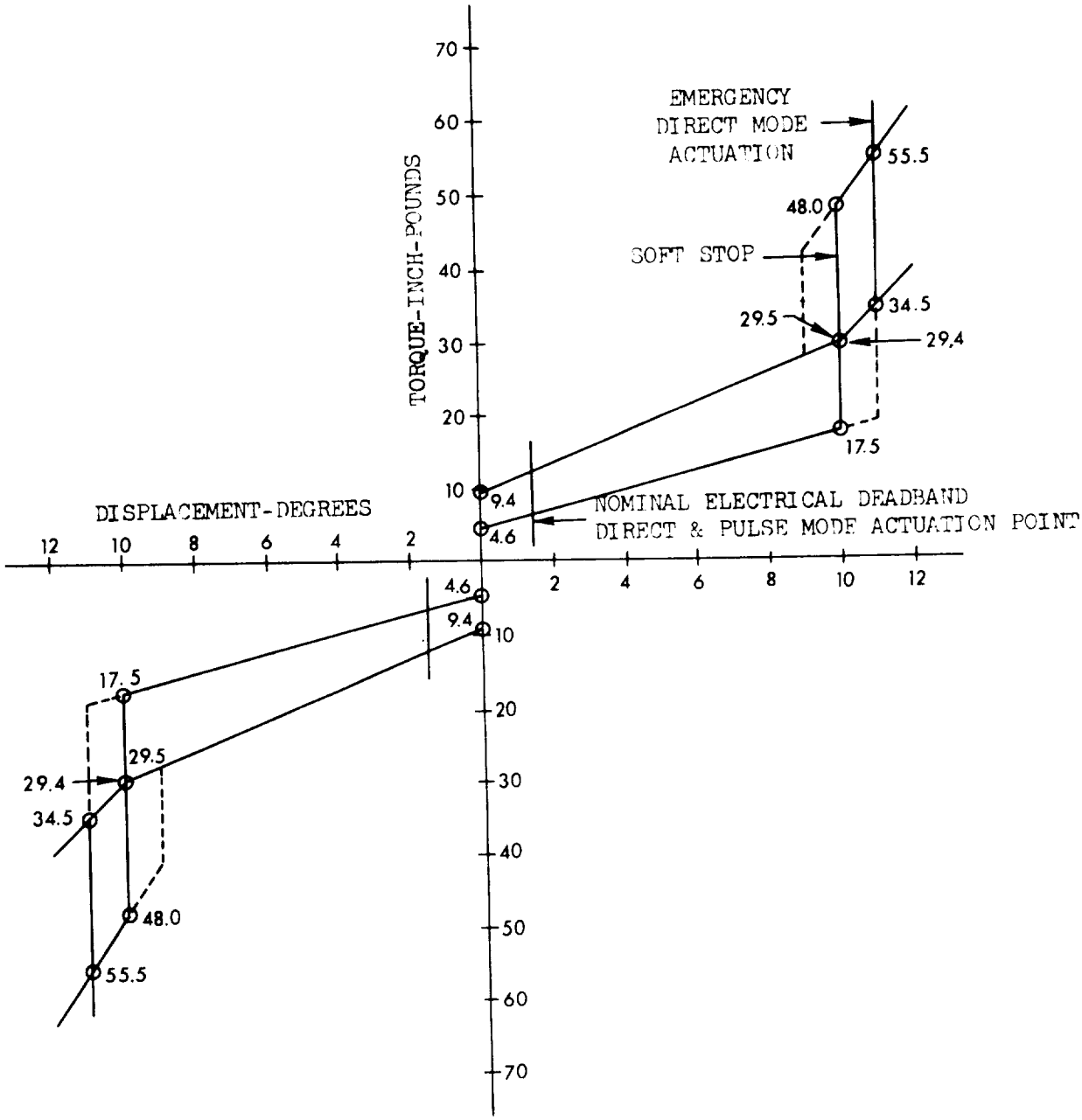

Figure A-3. Rotation Control Torque Versus Displacement (Pitch Axis)

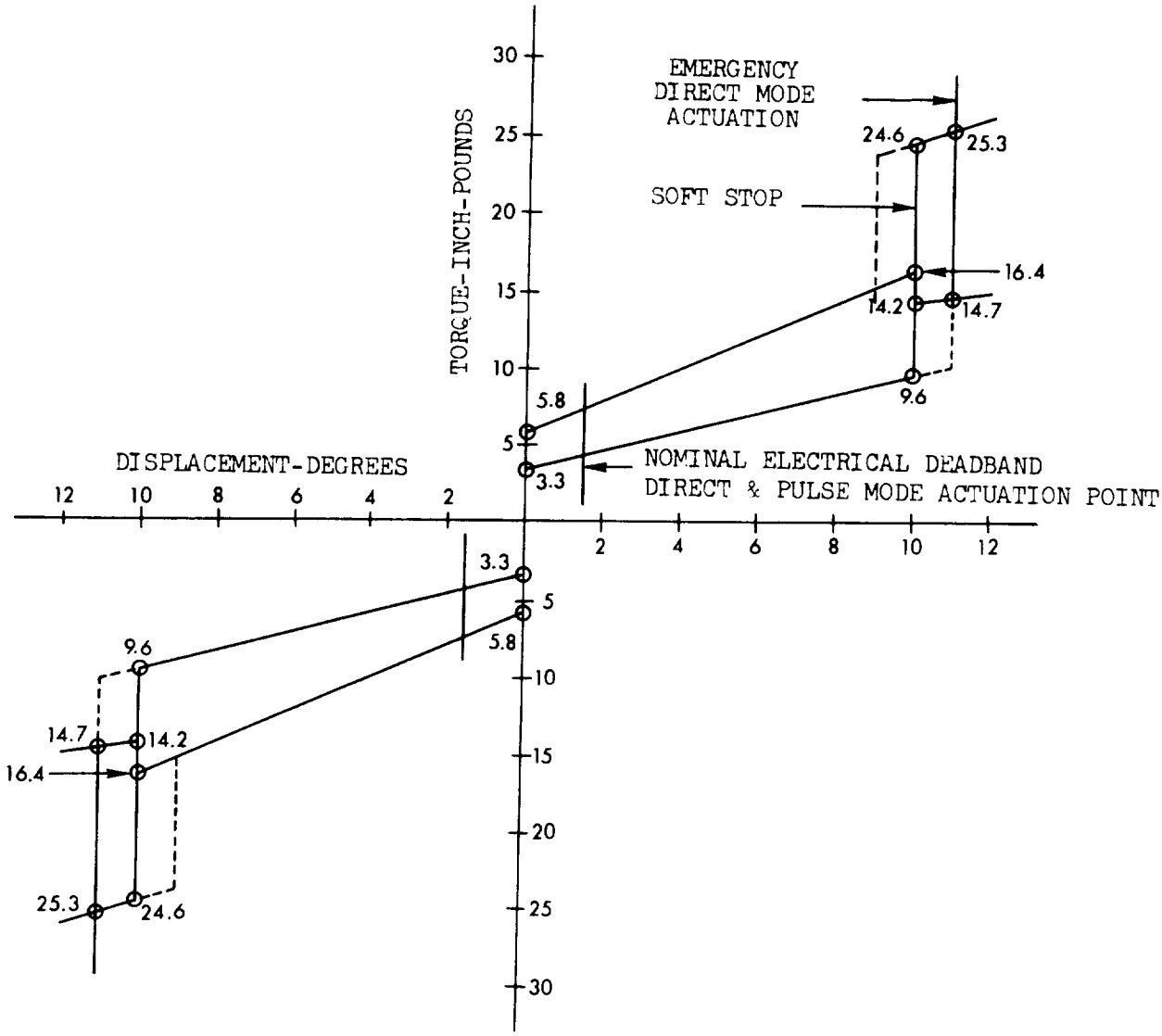

Figure A-4. Rotation Control Torque Versus Displacement (Yaw Axis)

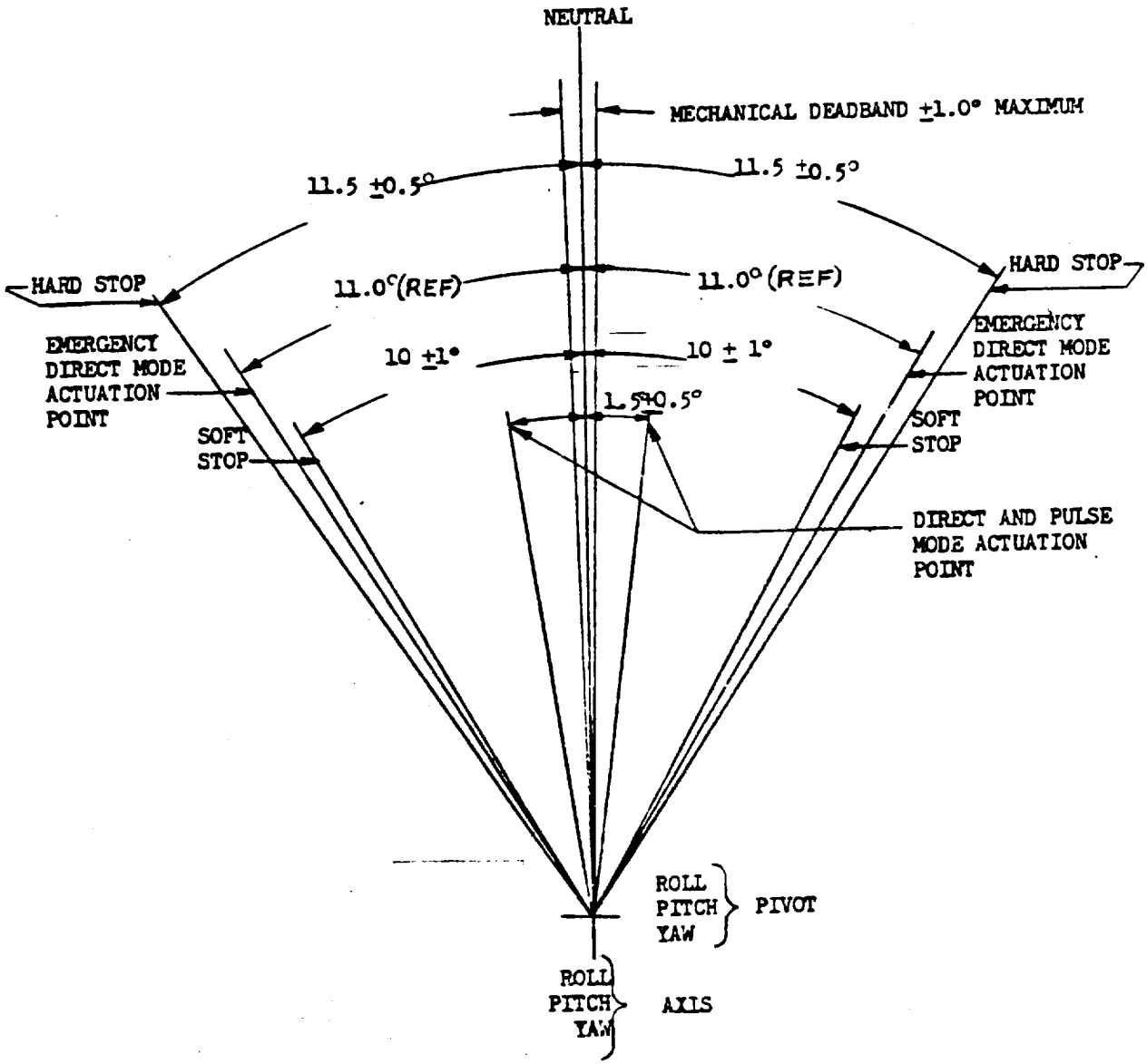

Figure A-5. Rotation Controller Roll Pitch and Yaw Movements

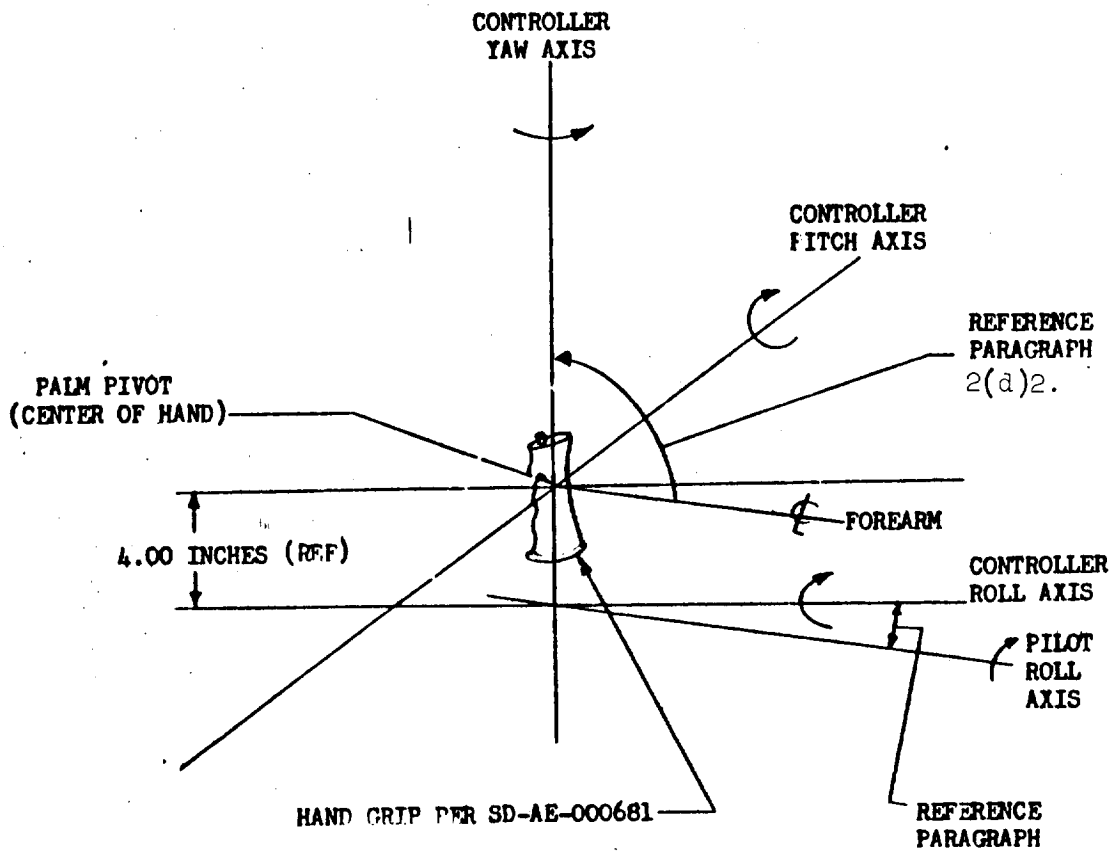

Figure A-6. Rotation Control Axis Orientation

APPENDIX B

ABBREVIATIONS AND ACRONYMS

ACE	Automatic Checkout Equipment
ACS	Attitude Control Subsystem
AGCU	Attitude Gyro Coupler Unit
ARS	Attitude Reference Subsystem
AS/CP	Attitude Set Control Panel
AS/GPD	Attitude Set/Gimbal Position Display
ATP	Acceptance Test Procedure
BMAGS	Body-Mounted Attitude Gyros
B/O	Breakout
B/U	Backup
CCW	Counterclockwise
CDR	Critical Design Review
CDU	Coupling Display Unit
CEI	Contract End Item
CM	Command Module
CMC	Command Module Computer
CSM	Command Service Module
CW	Clockwise
DECA	Display Electronic Control Assembly

DOF	Degree of Freedom
ECA	Electronic Control Assembly
ECLSS	Environment Control and Life Support System
ECS	Entry Control Subsystem
EDA	Electronic Display Assembly
E/L	Electroluminescence
EMI	Electromagnetic Interference
EMS	Entry Monitor System
FACI	First Article Configuration Inspection
FDAI	Flight Director Attitude Indicator
GA	Gyro Assembly
G&C	Guidance and Control
G&N	Guidance and Navigation
GDC	Gyro Display Coupler
GP/FPI	Gimbal Position/Fuel Pressure Indicator
GSE	Ground Support Equipment
IFM	In-Flight Maintenance
IMU	Inertial Measurement Unit
LM	Lunar Module
LOI	Lunar Orbit Insertion
MA	Mercury Atlas
MIT	Massachusetts Institute of Technology

MTBF	Mean Time Between Failure
MTVC	Manual Thrust Vector Control
NR	North American Rockwell Corporation
P/T/T	Push To Talk
p-p	Peak to peak
P	Pitch
PDF	Probability Density Function
PDR	Preliminary Design Review
PGNCS	Primary Guidance, Navigation, and Control System
R	Roll
R/C	Rotation Controller
RCS	Reaction Control System
RGP	Rate Gyro Package
RJC	Reaction Jet Control
RJD	Reaction Jet Driver
S-II	Saturn Second-Stage Boost Vehicle
S-IVB	Saturn Third-Stage Boost Vehicle
SC	Spacecraft
SCS	Stabilization and Control System
SM	Service Module
SPS	Service Propulsion System
SW	Switch
TAP	Tolerance Analysis Program

T/C	Translation Controller
TM	Telemetry
TVC	Thrust Vector Control
TVSA	Thrust Vector Servo Amplifier
Y	Yaw
ΔV	Delta Velocity

APPENDIX C

NEW TECHNOLOGY

After a diligent review of the work performed under this contract, no new innovation, discovery, improvement, or invention was made.