https://ntrs.nasa.gov/search.jsp?R=19690031774 2018-07-24T20:59:37+00:00Z

N 69 41163

NASA CR 106480

UNIVERSITY OF MARYLAND

CASE FILE COPY

Technical Note BN-613 June 1969

CORRELATION EFFECTS IN SEMI-INFINITE PLASMAS

Ralph L. Guernsey

Institute for Fluid Dynamics and Applied Mathematics

University of Maryland

College Park, Maryland

THE INSTITUTE FOR FLUID DYNAMICS *and* APPLIED MATHEMATICS

Technical Note BN-613 June 1969

CORRELATION EFFECTS IN SEMI-INFINITE PLASMAS

Ralph L. Guernsey

Institute for Fluid Dynamics and Applied Mathematics

University of Maryland

College Park, Maryland

ABSTRACT

The system of a fully ionized gas combined to a half-space by a perfectly reflecting boundary is discussed. It is shown how the effect of pair correlations can rigorously be taken into account in both the equilibrium and non-equilibrium theory.

I. INTRODUCTION

In the rapid development of plasma kinetic theory in recent years, the simplifying assumption of an "infinite" system, i.e., one for which the effect of any boundaries can be ignored, has been almost universally applied. However, in a sense, a plasma without boundaries is an uninteresting system, since it is not subject to experimental control (how does one "apply" a field to such a system?).

The present work consists of an analysis of the simplest system with boundaries: a semi-infinite system with one perfectly reflecting boundary. Such a system was treated in the "Vlasov approximation" in the second half of the famous paper by Landau[1]. We will show that some important corrections are obtained by the inclusion of pair correlations, particularly when the frequency of the applied field is near the plasma frequency.

In section II. and III, we discuss the thermal equilibrium plasma. We find that (a) If a static field is applied at the boundary, a sheath of thickness $\sim$ Debye length is created, in which the charge density is appreciably different from zero. The results for this case agree quantitatively with the recent work of Pinney[2] for slab geometry, in the limit of a thick slab. (b) Even in the absence of an applied field, there is a correction to the Debye-Hückel pair correlation due to the physical presence of the boundary; this dies out exponentially if either particle is more than a Debye length from the wall. This leads to (c) a boundary layer of thickness $\sim$ Debye length in which the density of each species

varies by an amount - plasma parameter from its average value, even in the absence of an applied field. Pinney[2] also found such a boundary layer, but our results differ from his in both the sign and magnitude of the density corrections. Inasmuch as (1) it seems intuitively obvious that the densities near the wall should be less than those in the interior, in contradiction to Pinney; and (2) our method is much simpler than Pinney's for both semi-infinite and slab geometries, we believe our results are correct, and that there is an error somewhere in the "extensive computation" omitted from Pinney's paper.

In section IV, we consider the nonequilibrium theory on the basis of the first two equations of the BBGKY hierarchy, linearized about equilibrium, and with the triple correlation neglected. The main correction to the Vlasov treatment of Landau[1] occurs when the frequency of the applied field is near the plasma frequency (specifically $|\omega - \omega_p| \lesssim \nu$, where ν is the effective "collision frequency"). In this case, the limiting value of the field amplitude at large distances from the boundary is given by $E(\infty) = E(o)/\varepsilon_{tot}$ where ε_{tot} is the "dielectric constant" of the system including the effect of correlations. As $\omega \to \omega_p$ (and the "collisionless" dielectric constant approaches zero), the effect of correlations is dominant. In terms of impedance, it turns out that the impedance at the plasma frequency is nearly pure resistance, and inversely proportional to the plasma parameter. Since this limiting value is large, it should be sensitive to the precise treatment of the correlation effects. Two additional points should be noted: (1) The correlational correction to the dielectric constant is zero for the usual model of an electron gas in a positive background, and is due to electron-ion interactions.

(2) In addition to the usual effects due to emission and absorption of plasma waves, effects are also found due to "surface plasma waves" propagating at a frequency $\sim \omega_p/\sqrt{2}$. As usual, however, the wave effects are "non-dominant" for a stable plasma (i.e., are smaller than bare particle interaction effects by a large logarithm).

Section V discusses the results, and the possibilities of treating more realistic bounded systems.

II. "COLLISIONLESS" EQUILIBRIUM PLASMA IN A HALF-SPACE

We consider an overall neutral, fully ionized gas of an arbitrary number of species, with type σ characterized by charge e_σ , mass m_σ and mean density n_σ . Where convenient, we will require that all components are singly ionized, i.e., $e_1 = -e$, $e_\sigma = e$, $\sigma > 1$. The system is assumed to be confined to the half-space $x > 0$ by a perfectly reflecting boundary on which a static (i.e., time independent) electric field

$$E(x = 0) = E_o$$

is applied. To zeroth order in the plasma parameter $\left(\sim \frac{\text{mean interaction energy}}{\text{mean thermal energy}}\right)$ the system is described by the Vlasov and Poisson equations. We further assume that sufficient time has elapsed for the velocity distribution to be Maxwellian (of course, correlations,neglected in the Vlasov equation, are required to drive the system to equilibrium, but we assume that the Vlasov equation adequately describes the density distribution after the equilibrium has been achieved). Thus we take[3]

$$F_1 \to f_o(x,\underset{\sim}{v},\sigma) = n(x,\sigma) \left(\frac{\beta m_\sigma}{2\pi}\right)^{3/2} \exp\left[-\frac{\beta m_\sigma v^2}{2}\right].$$

The equations governing the system are then given by

$$\frac{dn(x,\sigma)}{dx} = \beta e_\sigma \, n(x,\sigma) \, E(x) \tag{1}$$

(equilibrium Vlasov equation), and

$$\frac{dE}{dx} = 4\pi \sum_\sigma e_\sigma \, n(x,\sigma) \tag{2}$$

(Poisson's equation).

Equations (1) and (2) are a coupled pair of non-linear equations for $E(x)$, $n(x,\sigma)$. However, we will see that for this simple model (unlike the non-equilibrium theory) they can be solved exactly.

The form of equation (1) suggests the substitution

$$n(x,\sigma) = c(\sigma) \; e^{-\beta e_\sigma \phi(x)} \tag{3}$$

which gives, on substitution into (1),

$$\frac{d\phi(x)}{dx} = - E(x) \quad . \tag{4}$$

Equation (4) shows that $\phi(x)$ is independent of σ , except for a constant which could be absorbed into $c(\sigma)$ (the requirement that $\phi(x)$ be independent of σ removes the ambiguity from (3)). Eq. (4) also

shows that $\phi(x)$ is in the nature of a potential for $E(x)$. We also require that

$$\lim_{x \to \infty} \phi(x) = \lim_{x \to \infty} E(x) = 0 \tag{5}$$

so that

$$c(\sigma) = n_\sigma \tag{6}$$

The condition that the mean charge density be zero is then given by

$$\sum_\sigma n_\sigma e_\sigma = 0 \tag{7}$$

Substitution of (3), (4), (6) into the Poisoon's equation (2) gives

$$\frac{dE}{dx} = -\frac{d^2\phi(x)}{dx^2} = 4\pi \sum_\sigma e_\sigma n_\sigma e^{-\beta e_\sigma \phi(x)} \tag{8}$$

It is not known whether it is possible to solve (8) for general e_σ, n_σ subject to (7); however for the singly ionized case, it takes a particularly simple form. In this case, (8) becomes

$$\frac{d^2\phi}{dx^2} = 4\pi e \left[n_1 e^{\beta e \phi(x)} - \sum_{\sigma \geq 2} n_\sigma e^{-\beta e \phi(x)} \right] \tag{9}$$

But, according to (7)

$$\sum_{\sigma > 2} n_\sigma = n_1 \equiv n_o \tag{10}$$

and defining

$$\psi(x) = \beta e \phi(x) \tag{11}$$

we find

$$\frac{d^2\psi}{dx^2} = \kappa^2 \sinh \psi \tag{12}$$

where

$$\kappa^2 \equiv 8\pi\beta n_o e^2 \tag{13}$$

This equation has also been obtained by Pinney[2] who solved it for the more realistic boundary conditions of the plasma capacitor. We will briefly sketch its solution for the semi-infinite problem. Inasmuch as the independent variable does not appear explicitly, the first integral is immediate, and is given by

$$\left(\frac{d\psi}{dx}\right)^2 = 2\kappa^2 \cosh \psi + \text{const.} \tag{14}$$

The constant is determined by the requirement that

$$\lim_{x \to \infty} \psi(x) = \lim_{x \to \infty} \frac{d\psi}{dx} = 0 \tag{15}$$

whence

$$\frac{d\psi}{dx} = -\sqrt{2}\,\kappa\,\sqrt{\cosh \psi - 1} \tag{16}$$

where the choice of the minus sign on the square root is dictated by the requirement that ψ should not grow in space. Equation (16) may also be integrated by standard means, and one finds

$$\psi(x) = 2 \ln \coth \left[\frac{\kappa(x + x_o)}{2} \right] \tag{17}$$

where x_o is an undetermined constant. The constant may be determined by the requirement that

$$E(0) = - \left(\frac{1}{\beta e} \right) \frac{d\psi}{dx} \Bigg|_{x = 0} = E_o \tag{18}$$

whence

$$x_o = \frac{1}{\kappa} \sinh^{-1} \left(\frac{2\kappa}{\beta e E_o} \right) \tag{19}$$

and

$$E(x) = \frac{2\kappa}{\beta e} \operatorname{csch} \kappa(x + x_o) = \frac{E_o}{\cosh \kappa x + \sqrt{1 + \alpha} \sinh \kappa x} \tag{20}$$

where

$$\alpha \equiv \left(\frac{\beta e E_o}{2\kappa} \right)^2 = \frac{\varepsilon_{field}}{4\, \varepsilon_{th}} \quad , \tag{21}$$

and

$$\varepsilon_{field} \equiv \frac{E_o^2}{8\pi} \quad , \tag{22}$$

$$\varepsilon_{th} = n_o \, \Theta \quad , \tag{23}$$

are the energy densities associated with the applied field and the thermal motion respectively. The densities of the various species are given by (3), (6); in particular the charge density is given by

$$\rho(x) = -4e\, n_o \operatorname{csch}\left[\kappa(x + x_o)\right] \coth\left[\kappa(x + x_o)\right]$$

$$= -\frac{\kappa E_o}{4\pi} \frac{\left[\sqrt{1+\alpha}\cosh \kappa x + \sinh \kappa x\right]}{\left[\sqrt{1+\alpha}\sinh \kappa x + \cosh \kappa x\right]^2}$$

$$= -\frac{2\kappa E_o\, e^{-\kappa x}\left[1 + \left(\frac{\sqrt{1+\alpha}-1}{\sqrt{1+\alpha}+1}\right) e^{-2\kappa x}\right]}{4\pi\left[\sqrt{1+\alpha}+1\right]\left[1 - \left(\frac{\sqrt{1+\alpha}-1}{\sqrt{1+\alpha}+1}\right) e^{-2\kappa x}\right]^2} \tag{24}$$

Thus both the field and the charge density die out exponentially for $\kappa x \gg 1$, independent of the strength of the field. One difference between the strong $(\alpha \gg 1)$ and weak $(\alpha \ll 1)$ field cases should be noted however. In the weak field case, the charge density at the boundary is proportional to the field, whereas for strong fields, it goes as E_o^2. In fact, one sees from (24) that

$$\rho(o) = -\frac{\kappa E_o \sqrt{1+\alpha}}{4\pi} \tag{25}$$

so that [eq.(21)]

$$\rho(o) \approx -\frac{\kappa E_o}{4\pi}, \quad \varepsilon_{field} \ll \varepsilon_{th} \tag{26}$$

and

$$\rho(o) \approx - \frac{\beta e E_o^2}{8\pi} = - e\, n_o \left(\frac{\varepsilon_{field}}{\varepsilon_{th}} \right) , \quad \varepsilon_{field} >> \varepsilon_{th} \tag{27}$$

These relations could also have been derived from the pressure conservation law

$$\sum_{\sigma} n(x,\sigma)\Theta - \frac{E^2(x)}{8\pi} = \text{const.} = 2\, n_o \tag{28}$$

which can easily be obtained directly from (1), (2). For the strong field case, the ion density near the plate is nearly zero, and the electron density may greatly exceed its mean value. Not much physical significance may be attached to the strong field results however, since, for such strong fields, the thermal equilibrium cannot be established, and we will be confronted with electron runaway.

In the nonequilibrium theory of Section IV, we will linearize about a <u>field-free</u> equilibrium $(E_o = 0)$. In this case, the results of this section show that, in the absence of correlations, the one-particle equilibrium distribution is a Maxwellian with constant density. However, we will show in the next section that correlations give rise to a different sort of boundary layer, similar to that found in an ordinary gas, in which the density differs from its mean value, even in the absence of an applied field.

III. SHEATH FORMATION IN EQUILIBRIUM, FIELD-FREE PLASMA

In the absence of an applied field, the previous section shows that there is no field anywhere in the equilibrium plasma, and that the

density of each species is uniform when correlations are neglected. In the present section we will show how non-negligible pair correlations affect this picture.

We make the usual assumptions appropriate to a stable, high-temperature plasma, namely that

$$F_2 = F_1 F_1 + g$$

$$F_3 = F_1 F_1 F_1 + \sum_{\text{pairs}} g F_1 + h$$

and that g is first order and h is higher order in the small parameter

$$\frac{\kappa^3}{n} \sim \beta e^2 \kappa$$

which characterizes the system (κ is defined by (13)) . We define thermal equilibrium by

$$F_1 \to f_o = n(x,\sigma) \left(\frac{\beta m_\sigma}{2\pi}\right)^{3/2} \exp\left[-\frac{\beta m_\sigma v^2}{2}\right]$$

and

$$g \to g_o = f_o(x,\underset{\sim}{v},\sigma)\ f_o(x',v',\sigma)\ G_o(x,\sigma,x',\sigma',\underset{\sim}{R_\perp}-\underset{\sim}{R'_\perp})$$

where $\underset{\sim}{R_\perp}$, $\underset{\sim}{R_\perp}$ are the components of the particle position vectors in the plane of the boundary. Then to first order in the plasma parameter, the first two equations in the BBGKY hierarchy become

$$\frac{\partial}{\partial x} n(x,\sigma) = - \beta e_\sigma n(x,\sigma) \sum_{\sigma'} e_{\sigma'} \int_0^\infty dx' \int d^2\rho \left[\frac{\partial}{\partial x} \left(\frac{1}{\sqrt{(x-x')^2 + \rho^2}} \right) \times \right.$$

$$\left. \times \; n(x',\sigma') \right] \left[1 + G_o(x,\sigma,x',\sigma',\underset{\sim}{\rho}) \right] \quad ; \tag{29}$$

$$\frac{\partial}{\partial \underset{\sim}{R}} G_o(x,\sigma,x',\sigma',\underset{\sim}{R}_\perp - \underset{\sim}{R}'_\perp) =$$

$$- \beta e_\sigma e_{\sigma'} \frac{\partial}{\partial \underset{\sim}{R}} \left(\frac{1}{|\underset{\sim}{R} - \underset{\sim}{R}'|} \right) - \beta e_\sigma \sum_{\sigma''} e_{\sigma''} \int_0^\infty dx'' n(x'',\sigma'') \int d^2 R''_\perp$$

$$\frac{\partial}{\partial \underset{\sim}{R}} \left(\frac{1}{|\underset{\sim}{R} - \underset{\sim}{R}''|} \right) G_o(x'',\sigma'',x',\sigma',\underset{\sim}{R}''_\perp - \underset{\sim}{R}'_\perp) \tag{30}$$

It is convenient to introduce

$$G_o(x,\sigma,x',\sigma', \underset{\sim}{R}_\perp - \underset{\sim}{R}'_\perp) = - \beta e_\sigma e_{\sigma'} \mathcal{G}_o(x,x',\underset{\sim}{R}_\perp - \underset{\sim}{R}'_\perp) \tag{31}$$

Substitution of (31) into (30) gives

$$\frac{\partial}{\partial \underset{\sim}{R}} \mathcal{G}_o(x,x',\underset{\sim}{R}_\perp-\underset{\sim}{R}'_\perp) = \frac{\partial}{\partial \underset{\sim}{R}} \left(\frac{1}{|\underset{\sim}{R} - \underset{\sim}{R}'|}\right)$$

$$- \beta \sum_{\sigma''} e^2_{\sigma''} \int_0^\infty dx'' n(x'',\sigma'') \int d^2R''_\perp \frac{\partial}{\partial \underset{\sim}{R}} \left(\frac{1}{|\underset{\sim}{R}-\underset{\sim}{R}''|}\right) \mathcal{G}_o(x'',x',\underset{\sim}{R}''_\perp-\underset{\sim}{R}'_\perp) \ . \tag{32}$$

It is now apparent why no σ arguments were included in $\mathcal{G}_o$; the right side of (32) is independent of σ , and thus $\mathcal{G}_o$ must be .
By symmetry $\mathcal{G}_o$ must also be independent of σ' . In deriving (30), we have used the fact that according to (29), $\partial n(x,\sigma)/\partial x$ is proportional to G_o and thus to the plasma parameter; therefore terms like $G_o\ \partial n(x,\sigma)/\partial x$ are second order in the plasma parameter, and have been neglected. We have also used the fact that the charge density vanishes as the plasma parameter goes to zero (in the absence of an applied field) as seen from the preceding section, and thus may be taken as of order the plasma parameter (or smaller). By a similar argument, we may replace $n(x'',\sigma'')$ by $n_{\sigma''}$ on the right of (30), $n(x,\sigma)$ by n_σ on the right of (29), and $n(x',\sigma')$ by $n_{\sigma'}$ in the <u>second</u> term (but not the first) on the right of (29). These arguments would be invalid if they led to secular growth of $n(x,\sigma)$ in x , however we will find that this is not the case. Indeed we will find that (29), (30) lead to a correction to the density which is both small and exponentially damped in space.

Taking the divergence of (32), one finds

$$\left[\left(\frac{\partial}{\partial \underset{\sim}{R}}\right)^2 - \kappa^2 \right] \mathcal{G}_o = - 4\pi\delta(\underset{\sim}{R} - \underset{\sim}{R}') \quad . \tag{33}$$

Equation (33), is, of course, a familiar one, with a familiar solution; the Debye-Hückel correlation. However, Debye-Hückel is <u>not</u> a solution of (32), because the integral over x'' is from 0 to ∞, not $(-\infty,\infty)$. To solve these equations, we employ a two dimensional Fourier transform with respect to $\underset{\sim}{R}_\perp - \underset{\sim}{R}'_\perp$; defining

$$\Gamma_o(x,x',\underset{\sim}{s}) = \int d^2\rho \; e^{-i\underset{\sim}{s}\cdot\underset{\sim}{\rho}} \; G_o(x,x',\underset{\sim}{\rho}) \quad , \tag{34}$$

one finds

$$\frac{\partial\Gamma_o(x,x',\underset{\sim}{s})}{\partial x} = -\,2\pi \;\mathrm{sgn}\;(x-x')^{-s|x-x'|}$$

$$+\;\frac{\kappa^2}{2}\int_0^\infty dx''\;\mathrm{sgn}(x-x'')\;e^{-s|x-x''|}\;\Gamma_o(x'',x'\underset{\sim}{s}) \tag{35}$$

and

$$\left[\frac{\partial^2}{\partial x^2} - (\kappa^2 + s^2)\right]\Gamma_o(x,x',\underset{\sim}{s}) = -\,4\pi\delta(x-x') \tag{36}$$

where we have used

$$\int d^2\rho\;\frac{e^{-i\underset{\sim}{s}\cdot\underset{\sim}{\rho}}}{\sqrt{\rho^2 + x^2}} = \frac{2\pi e^{-s|x|}}{s} \tag{37}$$

The solution of (36) which vanishes as $x,x' \to \infty$ clearly has the form

$$\Gamma_o(x,x',\underset{\sim}{s}) = \frac{2\pi e^{-\sqrt{\kappa^2+s^2}|x-x'|}}{\sqrt{\kappa^2 + s^2}} + C\,e^{-\sqrt{\kappa^2+s^2}(x+x')} \tag{38}$$

The constant C is determined by the requirement that (38) also satisfies (35). On substitution of (38) into (35), one finds after straightforward evaluation of some integrals, that (38) is a solution of (35) if and only if

$$C = \frac{2\pi}{\sqrt{\kappa^2 + s^2}} \left(\frac{\sqrt{\kappa^2 + s^2} - s}{\sqrt{\kappa^2 + s^2} + s} \right) \tag{39}$$

Thus, from (38), (39), (31), (34),

$$G_o(x,\sigma,x',\sigma',\rho) = - \frac{\beta e_\sigma e_{\sigma'}}{(2\pi)} \int \frac{d^2\underset{\sim}{s}\, e^{i\underset{\sim}{s}\cdot\underset{\sim}{\rho}}}{\sqrt{\kappa^2 + s^2}}$$

$$\left[e^{-\sqrt{\kappa^2+s^2}|x-x'|} + \left(\frac{\sqrt{\kappa^2 + s^2} - s}{\sqrt{\kappa^2 + s^2} + s} \right) e^{-\sqrt{\kappa^2+s^2}(x+x')} \right] . \tag{40}$$

The first term of (40) is readily seen to reduce to the familiar Debye-Hückel result; the second, which damps out exponentially if either particle moves more than a Debye length from the boundary, is a correction due to the presence of the wall. Such a correction is not unexpected; the usual interpretation of the pair correlation is $G_o = - \beta\phi_{eff}$ where ϕ_{eff} is the effective "shielded" interaction between a pair of particles. But the "shielding" is due to long-range interaction with other particles in the system, and clearly cannot be spherically symmetric if the pair is near the boundary (and thus most of the shielding particles are on one side).

We now return to (29), and write $n(x,\sigma) = n_\sigma + n_1(x,\sigma)$,

$$\left| \frac{n_1}{n_\sigma} \right| << 1 \tag{41}$$

and substitute (40), (41) into (29) to obtain

$$\frac{\partial n_1(x,\sigma)}{\partial x} = 2\pi\beta e_\sigma n_\sigma \sum_{\sigma'} e_{\sigma'} \int_0^\infty dx' \ \mathrm{sgn}(x-x') \ n_1(x',\sigma')$$

$$+ \ \kappa n_\sigma \ \varepsilon_\sigma \ I(\kappa x) \tag{42}$$

where

$$\varepsilon_\sigma \equiv \beta e_\sigma^2 \kappa \tag{43}$$

is the single species plasma parameter,

$$I(\lambda) = \int_0^\infty dt \ t \ e^{-2\lambda\sqrt{t^2+1}} \left(\frac{\sqrt{t^2+1} - t}{\sqrt{t^2+1} + t} \right) \tag{44}$$

and we have again evaluated some straightforward integrals. While an exact analytic evaluation of the integral in (44) seems difficult, one readily shows that

$$I(\lambda) = - (1/4)\left(\ln\lambda + \gamma + 1/4\right) + 0(\lambda) \ , \quad \lambda << 1$$

$$= \frac{e^{-2\lambda}}{2\lambda} \left[1 + 0\left(\lambda^{-1/2}\right)\right] , \ \lambda >> 1 \quad . \tag{45}$$

Aside from the exponential decay for large λ , we note that $I(\lambda)$ has a not unexpected singularity of the origin, related to the usual short range divergence.

Differentiating (42) with respect to x, one finds

$$\frac{\partial^2}{\partial x^2} n_1(x,\sigma) = 4\pi\beta e_\sigma n_\sigma \rho(x) + n_\sigma \kappa^2 \varepsilon_\sigma I'(\kappa x) \tag{46}$$

where

$$\rho(x) = \sum e_\sigma n_1(x,\sigma) \tag{47}$$

is the charge density. For the charge density, we find the equation

$$\left(\frac{\partial^2}{\partial x^2} - \kappa^2\right) \rho(x) = \beta\kappa^3 I'(\kappa x) \sum n_\sigma e_\sigma^3 \tag{48}$$

The solution of (48) which vanishes at ∞ is given by

$$\rho(x) = Ae^{-\kappa x} - \frac{\beta\kappa^2 \Sigma n_\sigma e_\sigma^3}{2} \int_0^\infty dx' \, e^{-\kappa|x-x'|} I'(\kappa x') \quad . \tag{49}$$

The constant A is determined by the requirement of overall neutrality[4] $\int_0^\infty dx\, \rho(x) = 0$ which gives

$$A = (\beta\kappa/2) \sum n_\sigma e_\sigma^3 \int_0^\infty d\lambda' \, I'(\lambda') \left[2 - e^{-\lambda'}\right] \tag{50}$$

It is straightforward to reduce (49), (50) to the form

$$\rho(x) = \beta\kappa\left(\sum n_\sigma e_\sigma^3\right) J(\kappa x) \tag{51}$$

where $J(\lambda)$ has the alternate forms (useful for large and small λ respectively)

$$J(\lambda) = e^{-\lambda} \int_0^\infty d\lambda' \sinh \lambda' \, I(\lambda') - \int_\lambda^\infty d\lambda' \cosh(\lambda-\lambda') \, I(\lambda')$$

$$= \int_0^\lambda d\lambda' \cosh(\lambda-\lambda') \, I(\lambda') - \cosh \lambda \int_0^\infty d\lambda' \, e^{-\lambda'} \, I(\lambda') \tag{52}$$

It is immediately apparent that $J(\lambda)$ is bounded for all λ, despite the short range divergence of $I(\lambda)$. Also, from (44) and the asymptotic forms (45), it is apparent that $J(\lambda)$ has the asymptotic forms

$$J(\lambda) = C_1 \, e^{-\lambda} + 0\left(e^{-2\lambda}/\lambda\right) , \quad \lambda >> 1$$

$$= - C_2 + 0(\lambda \, \ln\lambda) , \quad \lambda << 1 \tag{53}$$

where C_1, C_2 are positive constants given by

$$C_1 = \int_0^\infty d\lambda' \sinh \lambda' \, I(\lambda') = \int_0^\infty \frac{dt \; t\left(\sqrt{t^2+1} - t\right)}{(4t^2+3)\left(\sqrt{t^2+1} + t\right)} \tag{54}$$

$$C_2 = \int_0^\infty d\lambda' e^{-\lambda'} \, I(\lambda') = \int_0^\infty \frac{dt \; t\left(\sqrt{t^2+1} - t\right)}{(2\sqrt{t^2+1} + 1)\left(\sqrt{t^2+1} + t\right)} \quad . \tag{55}$$

Thus, independent of the quantities e_σ, we find a charge density which damps out exponentially. But, for the singly ionized case (which was the only case for which we were able to conclude in Section II that the charge density and field were zero as the plasma parameter approached zero), we have that $\Sigma n_\sigma e_\sigma^3 = e^2 \Sigma n_\sigma e_\sigma = 0$, and thus, from

(51) ($\kappa = \sqrt{\beta \sum_{\sigma'} n_{\sigma'} e_{\sigma'}^2}$ is independent of σ) $\rho(x) = 0$ for all x and (42) reduces to

$$\frac{\partial}{\partial x} n_1(x) = n_o \kappa \varepsilon I(\kappa x) \tag{56}$$

where $n_1(x)$ is the electron density perturbation (the ion densities differ from the electron density by a trivial factor if there is more than one species). Assuming $n_1(\infty) = 0$ this integrates trivially to

$$n_1(x) = - n_o \varepsilon \int_{\kappa x}^{\infty} d\lambda \, I(\lambda) \tag{57}$$

Again the integral is somewhat difficult, but one may show without difficulty that

$$n_1(x) = -n_o \varepsilon \begin{cases} \dfrac{e^{-2\kappa x}}{4\kappa x} \left[1 + 0(1/\kappa x)\right], & \kappa x >> 1 \\[2ex] \dfrac{1}{6} \left[1 + 0 \; |\kappa x \ell n \kappa x|\right], & |\kappa x| << 1 \end{cases} \tag{58}$$

There is no difficulty in adding an applied field to the calculation, provided $\varepsilon_{field} << \varepsilon_{th}$; indeed, if the parameters α of (21) (measuring the applied field energy) and ε of (43) (measuring the mean interaction energy) are both small, the effects of correlations and applied fields are superposable, and one may simply add the results of Section II (expanded in powers of $\sqrt{\alpha}$) to the present result to obtain

$$n_e(x) = n_o\Big[1 + 2\sqrt{\alpha}\,\exp^{-\kappa x} + \alpha\,\exp^{-2\kappa x}$$

$$- \varepsilon \int_{\kappa x}^{\infty} d\lambda\; I(\lambda) + 0(\alpha^{3/2}) + 0(\varepsilon^2) + 0(\sqrt{\alpha}\varepsilon)\Big] \quad . \tag{59}$$

In this limit, there is also no difficulty in treating the plasma capacitor; in fact, if L is the plate spacing, and $\kappa L >> 1$, the only significant effect on the pair correlation is to add a term exactly like the second term of (40), with $x + x'$ replaced by $2L-x-x'$, representing the sheath on the second boundary. In particular

$$n_e(0) = n_o\left[1 + 2\sqrt{\alpha} + \alpha - \frac{\varepsilon}{6}\left(1 + 0\left(\frac{1}{\kappa L}\right)\right)\right] \quad . \tag{60}$$

This is to be compared with (47) of Pinney.[2] As previously noted, the leading correction due to the applied field is in agreement; however, the correlation contribution (term proportional to ε in (60)) differs in both sign and magnitude from Pinney. Concerning this discrepancy, we note the following: (a) It seems intuitively obvious that the density of particles near the wall should be <u>less</u>, not greater than the density in the interior (this effect is charge independent, and is similar to the boundary layer effect in ordinary gases). (b) Our method and results are quite simple, and amenable to rather obvious physical interpretation; we have not omitted (or needed) any extensive computational details. (c) Only the most trivial modifications are necessary to generalize our method to the slab problem. Clearly (36) is still valid, and the only

modification of (35) is to replace the upper limit of the integral by L. To (38) must be added terms proportional to $\exp^{+\sqrt{\kappa^2 + s^2}|x - x'|}$ and $\exp^{\sqrt{\kappa^2 + s^2}(x + x')}$. The coefficients are determined straightforwardly from the analogue of (35). Instead of $n_1(\infty) = 0$, one requires that the overall charge density be zero. This leads (for the singly ionized case) to

$$n_1(x) = - \frac{n_o \varepsilon}{2} \int_0^\infty \frac{dt\ t\left[\left(\sqrt{t^2 + 1} - t\right)\Big/\left(\sqrt{t^2 + 1} + t\right)\right]}{\sqrt{t^2 + 1}\left[1 - \frac{(\sqrt{t^2 + 1} - t)}{(\sqrt{t^2 + 1} + t)} e^{-2\sqrt{t^2 + 1}\ \kappa L}\right]}$$

$$\left\{ \exp^{-2\sqrt{t^2 + 1}\ \kappa x} + \exp^{-2\sqrt{t^2 + 1}\ \kappa (L - x)} \right.$$

$$\left. - \frac{1}{\sqrt{t^2 + 1}\ \kappa L}\left[1 - \exp^{-2\sqrt{t^2 + 1}\ \kappa L}\right] \right\} \tag{61}$$

In obtaining (61), we have made no approximation and have evaluated exactly nine very straightforward integrals (nothing worse than $\int_0^L dx''\ \exp[a|x-x''|]\ \exp[b|x'' - x'|\ \mathrm{sgn}(x-x'')]$). It is evident that (61) may be expressed in terms of $I(\lambda)$ of (44) as

$$n_1(x) = - n_o \varepsilon \left[\int_{\kappa x}^\infty d\lambda\ I(\lambda) + \int_{\kappa(L-x)}^\infty d\lambda\ I(\lambda) \right.$$

$$\left. + 0\left(\frac{1}{\kappa L}\right) + 0\left(\exp^{-2\kappa L}\right)\right] \tag{62}$$

(d) As to the sign of the density correction, no computation is necessary. For the singly ionized case, the first term of (29) is zero in a linear approximation. For the second term, we note that G_o is (positive quantity) x $(-e_\sigma e_{\sigma'})$, and $\partial/\partial x\ (1/\sqrt{(x-x')^2 + \rho^2})\Big|_{x\to 0} > 0$. It follows that, at least in a linear approximation, $\partial n/\partial x\Big|_{x\to 0} > 0$, so that the density of each species <u>increases</u> as one moves away from the boundary (this conclusion is independent of whether the upper limit in (29) is ∞ or L) .

Thus we believe that our results for the "correlation boundary layer" are correct and Pinney's are in error.

IV. NON-EQUILIBRIUM THEORY

In the preceding two sections we have studied the following: (A) The response of the equilibrium plasma to a <u>static</u> field applied at the boundary, and (B) The formation of a boundary layer in a <u>field-free</u> equilibrium plasma, due to correlation effects. In the present section we will study the response of a plasma to an <u>oscillating</u> applied field, with pair correlations taken into account. The field at the boundary will be assumed to have the form $E_o\ e^{-i\omega t}$, and we will seek the steady state response, when all quantities are assumed to oscillate with the same frequency ω . Further, we will linearize about the previously determined field-free equilibrium. As usual, we will assume that the one particle distribution function is independent of the components of the position vector parallel to the boundary. Writing

$$F_1 = f_o + f_1 \ , \ g = g_o + g_1 \ , \ \left|\frac{f_1}{f_o}\right| << 1, \ \left|\frac{g_1}{g_o}\right| << 1 \qquad , \tag{63}$$

one finds, to first order in the strength of the applied field, the equations

$$\left(- i\omega + u \frac{\partial}{\partial x}\right) f_1(x,\eta) = - \frac{e_\sigma}{m_\sigma} E(x) \frac{\partial}{\partial u} f_o$$

$$+ \frac{e_\sigma}{m_\sigma} \int d\eta' \int_o^\infty dx' \int d^2\rho \left[\frac{\partial}{\partial x}\left(\frac{1}{\sqrt{\rho^2 + (x-x')^2}}\right)\frac{\partial}{\partial u}\right.$$

$$\left. + \frac{\partial}{\partial \underset{\sim}{\rho}}\left(\frac{1}{\sqrt{\rho^2 + (x-x')^2}}\right) \cdot \frac{\partial}{\partial \underset{\sim}{v_\perp}}\right] g_1(x,x',\rho,\eta,\eta') \tag{64}$$

$$\left[- i\omega + u \frac{\partial}{\partial x} + u' \frac{\partial}{\partial x'} + (\underset{\sim}{v_\perp} - \underset{\sim}{v'_\perp}) \cdot \frac{\partial}{\partial \underset{\sim}{\rho}}\right] g_1(x,\eta,\underset{\sim}{\rho},x',\eta'$$

$$= - \left[\frac{e_\sigma}{m_\sigma} E(x) \frac{\partial}{\partial u} + \frac{e_{\sigma'}}{m_{\sigma'}} E(x') \frac{\partial}{\partial u'}\right] g_o$$

$$+ e_\sigma e_{\sigma'} \left[\frac{\partial}{\partial x}\left(\frac{1}{\sqrt{(x-x')^2+\rho^2}}\right)\left(\frac{1}{m_\sigma}\frac{\partial}{\partial u} - \frac{1}{m_{\sigma'}}\frac{\partial}{\partial u'}\right) + \frac{\partial}{\partial \underset{\sim}{\rho}}\left(\frac{1}{\sqrt{(x-x')^2+\rho^2}}\right)\right.$$

$$\left. \cdot \left(\frac{1}{m_\sigma}\frac{\partial}{\partial \underset{\sim}{v_\perp}} - \frac{1}{m_{\sigma'}}\frac{\partial}{\partial \underset{\sim}{v'_\perp}}\right)\right] \left[f_o(\eta)\ f_1(x',\eta') + f_1(x,\eta)\ f_o(\eta')\right]$$

$$+ \frac{e_\sigma}{m_\sigma} \int d\eta'' \int_o^\infty dx'' \int d^2\rho' \left\{ g_o\left(x'',x',\underset{\sim}{\rho}-\underset{\sim}{\rho}',\eta'',\eta'\right)\right.$$

$$\left[\frac{\partial}{\partial x}\left(\frac{1}{\sqrt{(x-x'')^2+\rho'^2}}\right)\frac{\partial}{\partial u}+\frac{\partial}{\partial \underset{\sim}{\rho}'}\left(\frac{1}{\sqrt{(x-x'')^2+\rho'^2}}\right)\cdot\frac{\partial}{\partial \underset{\sim}{v}_\perp}\right]f_1(x,\eta)$$

$$+\ g_1(x'',x',\underset{\sim}{\rho}-\underset{\sim}{\rho}',\eta'',\eta')\left[\frac{\partial}{\partial x}\left(\frac{1}{\sqrt{(x-x'')^2+\rho'^2}}\right)\frac{\partial}{\partial u}+\frac{\partial}{\partial \underset{\sim}{\rho}'}\left(\frac{1}{\sqrt{\rho'^2+(x-x'')^2}}\right)\cdot\frac{\partial}{\partial \underset{\sim}{v}_\perp}\right]$$

$$f_o(\eta)\ +\ \begin{pmatrix} x \leftrightarrow x' \\ \underset{\sim}{\rho} \to -\underset{\sim}{\rho} \\ \underset{\sim}{\rho}' \to -\underset{\sim}{\rho}' \\ \eta \leftrightarrow \eta' \end{pmatrix}\Bigg\} \tag{65}$$

Here u , u' are the velocity components in the x direction, and we have used the shorthand

$$\eta \equiv (u,\underset{\sim}{v}_\perp,\sigma)\ ,\quad \int d\eta' = \sum_{\sigma'} e_{\sigma'} \int_{-\infty}^{\infty} du' \int d^2\underset{\sim}{v}'_\perp \quad , \tag{66}$$

etc.

We assume that particles striking the boundary are specularly reflected. This implies a condition on f_1 , i.e.

$$f_1(x = 0,u,\underset{\sim}{v}_\perp,\sigma) \ = \ f_1(0,\ -u,\underset{\sim}{v}_\perp,\sigma) \quad . \tag{67}$$

Defining

$$G_1(x,x',\eta,\eta',\underset{\sim}{s}) \ = \ \int d^2\rho\ e^{-i\underset{\sim}{s}\cdot\underset{\sim}{\rho}}\, g_1(x,x',\underset{\sim}{\rho},\eta,\eta') \quad , \tag{68}$$

and using our previous expression for g_o , one may cast (64), (65) in the forms

$$\left[- i\omega + u \frac{\partial}{\partial x}\right] f_1 = J(x,\eta) \tag{69}$$

$$\left[- i\omega + H(u,\eta,\underset{\sim}{s}) + H(u',\eta', -\underset{\sim}{s})\right] G_1(x,x',\eta,\eta')$$

$$= q(x,x',\eta,\eta') \tag{70}$$

where

$$J(x,\eta) = - \frac{e_\sigma}{m_\sigma} E(x) \frac{\partial}{\partial u} f_o$$

$$- \frac{e_\sigma}{2\pi m_\sigma} \int d\eta' \int_0^\infty dx' \int d^2s \; e^{s|x-x'|} \left[\mathrm{sgn}(x-x') \frac{\partial}{\partial u}\right.$$

$$\left. - \frac{i\underset{\sim}{s}}{s} \cdot \frac{\partial}{\partial \underset{\sim}{v_\perp}}\right] G_1(x,\eta,x',\eta') \quad , \tag{71}$$

the operator H on any function F is given by

$$H(x,\eta,\underset{\sim}{s}) \; F(x,\eta) = \left(u \frac{\partial}{\partial x} + i\underset{\sim}{s}\cdot\underset{\sim}{v_\perp}\right) F(x,\eta)$$

$$+ \frac{2\pi e_\sigma}{m_\sigma} \int d\eta'' \int_0^\infty dx'' \; e^{-s|x-x''|} \; F(x'',\eta'')$$

$$\left[\mathrm{sgn}(x-x'') \frac{\partial}{\partial u} - \frac{i\underset{\sim}{s}}{s} \cdot \frac{\partial}{\partial \underset{\sim}{v_\perp}}\right] f_o(\eta) \quad , \tag{72}$$

and

$$q(x,\eta,x',\eta') = -\frac{2\pi e_\sigma e_{\sigma'} e^{-s|x-x'|}}{m_\sigma}$$

$$\left[\mathrm{sgn}(x-x')\,\frac{\partial}{\partial u} - \frac{i\underset{\sim}{s}}{s}\cdot\frac{\partial}{\partial \underset{\sim}{v_\perp}}\right]\left[f_o f_1 + f_1 f_o\right]$$

$$+\frac{2\pi\beta e_\sigma^2 e_{\sigma'} E(x)}{m_\sigma\sqrt{\kappa^2+s^2}}\,\frac{\partial}{\partial u}\,f_o(\eta)\,f_o(\eta')$$

$$\left[e^{-\sqrt{\kappa^2+s^2}|x-x'|} + \left(\frac{\sqrt{\kappa^2+s^2}-s}{\sqrt{\kappa^2+s^2}+s}\right)e^{-\sqrt{\kappa^2+s^2}(x+x')}\right]$$

$$+\frac{(2\pi)^2\beta e_\sigma e_{\sigma'}}{\sqrt{\kappa^2+s^2}\;m_\sigma}\int d\eta''\int_0^\infty dx''\int dx''\,e^{-s|x-x''|}\left[e^{-\sqrt{\kappa^2+s^2}|x'-x''|}\right.$$

$$\left.+\left(\frac{\sqrt{\kappa^2+s^2}-s}{\sqrt{\kappa^2+s^2}+s}\right)e^{-\sqrt{\kappa^2+s^2}(x'+x'')}\right]\left[\mathrm{sgn}(x-x'')\,\frac{\partial}{\partial u} - \frac{i\underset{\sim}{s}}{s}\cdot\frac{\partial}{\partial \underset{\sim}{v_\perp}}\right]f_1(x,\eta)$$

$$+\begin{pmatrix} x \leftrightarrow x' \\ \eta \leftrightarrow \eta' \\ \underset{\sim}{s} \to -\underset{\sim}{s} \end{pmatrix} \qquad . \tag{73}$$

So far everything is defined only for the region $x > 0$ to which the plasma is confined by the perfectly reflecting boundary. Our method of solution will consist of extending the range of definition of f_1, G_1 to $x < 0$ in such a way that Fourier transform methods may

conveniently be applied. Now the obvious symmetry property for f_1, consistent with the reflection condition (66) is

$$f_1(-x,u) = f_1(x,-u) \quad . \tag{74}$$

However, if f_1 possesses the property (74), the left side of (69) will be invariant under the transformation $\binom{x \to -x}{u \to -u}$ whereas the right side (given (71)) is not, even if $E(-x) = -E(x)$. Therefore, it is convenient to define a new set of functions $\tilde{f}_1$, $\tilde{G}$, $\tilde{E}$ which reduce to f_1, G, E for $x,x' > 0$, have the symmetry properties

$$\tilde{f}_1(-x,u) = \tilde{f}_1(x,-u) \quad , \tag{75}$$

$$\tilde{G}_1(-x,u,x',u') = \tilde{G}_1(x,-u,x',u') \quad , \tag{76}$$

$$\tilde{G}_1(x,u,-x',u') = \tilde{G}_1(x,u,x',-u') \quad , \tag{77}$$

$$\tilde{E}(-x) = -\tilde{E}(x) \quad , \tag{78}$$

and satisfy the equations

$$\left(-i\omega + u\frac{\partial}{\partial x}\right)\tilde{f}_1(x,\eta) = \tilde{J}(x,\eta) \tag{79}$$

$$\left(-i\omega + \tilde{H}(x,\eta,\underset{\sim}{s}) + \tilde{H}(x',\eta',\underset{\sim}{-s})\right)\tilde{G}_1(x,\eta,x',\eta') = \tilde{q}(x,\eta,x',\eta') \tag{80}$$

where

$$\tilde{J}(x,\eta) = -\frac{e_\sigma}{m_\sigma}\left\{\tilde{E}(x)\,\frac{\partial}{\partial u}\,f_o(\eta)\right.$$

$$+\frac{1}{2(2\pi)}\int d\eta'\int_{-\infty}^{\infty}dx'\int d^2s\;e^{-s\left||x|-|x'|\right|}\left[\mathrm{sgn}(x)\,\mathrm{sgn}(|x|-|x'|)\frac{\partial}{\partial u}\right.$$

$$\left.\left.-\frac{i\underset{\sim}{s}}{s}\cdot\frac{\partial}{\partial \underset{\sim}{v_\perp}}\right]\tilde{G}_1(x,\eta,x',\eta')\right\} \tag{81}$$

$$\tilde{H}(x,\eta,\underset{\sim}{s})\;F(x,\eta) = \left[u\,\frac{\partial}{\partial x}+i\underset{\sim}{s}\cdot\underset{\sim}{v_\perp}\right]F(x,\eta)$$

$$+\frac{\pi e_\sigma}{m_\sigma}\int d\eta''\int_{-\infty}^{\infty}dx''\;e^{-s\left||x|-|x''|\right|}\;F(x'',\eta'')$$

$$\left[\mathrm{sgn}(x)\,\mathrm{sgn}(|x|-|x'|)\frac{\partial}{\partial u}-\frac{i\underset{\sim}{s}}{s}\cdot\frac{\partial}{\partial \underset{\sim}{v_\perp}}\right]f_o \tag{82}$$

$$\tilde{q}(x,\eta,x',\eta') = \frac{(2\pi)e_\sigma e_{\sigma'}}{m_\sigma}\left\{-\,e^{-s\left||x|-|x''|\right|}\right.$$

$$\left[\mathrm{sgn}(x)\,\mathrm{sgn}(|x|-|x'|)\,\frac{\partial}{\partial u}-\frac{i\underset{\sim}{s}}{s}\cdot\frac{\partial}{\partial v_\perp}\right]\left[f_o f_1+f_1 f_o\right]$$

$$+\frac{e_\sigma\beta\,\tilde{E}(x)}{\sqrt{\kappa^2+s^2}}\;\frac{\partial}{\partial u}\,f_o(\eta)\;f_o(\eta')\left[e^{-\sqrt{\kappa^2+s^2}\left||x|-|x'|\right|}\right.$$

$$\left.+\left(\frac{\sqrt{\kappa^2+s^2}-s}{\sqrt{\kappa^2+s^2}+s}\right)e^{-\sqrt{\kappa^2+s^2}(|x|+|x'|)}\right]$$

$$+ \frac{\pi\beta}{\sqrt{\kappa^2 + s^2}} \int d\eta'' f_o(\eta'') f_o(\eta') \int_{-\infty}^{\infty} dx'' \left[e^{-\sqrt{\kappa^2+s^2}\,\left|\,|x'| - |x''|\,\right|} \right.$$

$$\left. + \left(\frac{\sqrt{\kappa^2+s^2-2}}{\sqrt{\kappa^2+s^2+s}} \right) e^{-\sqrt{\kappa^2+s^2}\,\left(|x'| + |x''|\right)} \right] e^{-s\left|\,|x| - |x''|\,\right|} \left[\mathrm{sgn}(x)\,\mathrm{sgn}(|x|-|x''|) \frac{\partial}{\partial u} \right.$$

$$\left. \left. - \frac{i\underset{\sim}{s}}{s} \cdot \frac{\partial}{\partial \underset{\sim}{v_\perp}} \right] f_1(x,\eta) \right\} + \begin{pmatrix} x \leftrightarrow x' \\ \eta \leftrightarrow \eta' \\ \underset{\sim}{s} \to -\underset{\sim}{s} \end{pmatrix} \tag{83}$$

Clearly Eqs. (79) - (83) reduce to (69) - (73) for $x > 0$, and, given the symmetry relations (75) - (78), (79) is invariant under the transformation $(x \to -x\ ,\ u \to -u)$, while (80) is invariant under both $(x \to -x,\ u \to -u)$, $(x' \to -x', u' \to -u')$.

While non of the equations (79) - (83) are convolutions, they are still fairly easy to handle by Fourier transform methods. Before proceeding with the transformation of these equations, we somewhat belatedly note the boundary condition relating the current and the field. From the Maxwell equation

$$\nabla \times H = \frac{1}{c}\left[4\pi \underset{\sim}{j}(x) - i\omega\, \underline{E}(x)\right] \qquad ,$$

one finds

$$\nabla \cdot \left[\underset{\sim}{j}(x) - \frac{i\omega}{4\pi} \underset{\sim}{E}(x) \right] = 0$$

or, if $\underset{\sim}{j}$ and $\underset{\sim}{E}$ are only in the x direction and depend only on x ,

$$j - \frac{i\omega E}{4\pi} = \text{const.} = -\frac{i\omega}{4\pi} E_o \quad . \tag{84}$$

Here

$$j(x) \equiv \int d\eta \; u \; f_1(x,\eta) \tag{85}$$

is the current density (note: $j(o) = 0$) . Now if $\tilde{j}(x)$ is defined by a relation similar to (85) with f_1 replaced by $\tilde{f}_1$ it is clear that $\tilde{j}(-x) = -\tilde{j}(x)$. Similarly [if (78)] $\tilde{E}(x)$ is odd, the relation for the modified quantities corresponding to (84) is

$$\tilde{j}(x) - \frac{i\omega\tilde{E}(x)}{4\pi} = -\frac{i\omega E_o \operatorname{sgn}(x)}{4\pi} \tag{86}$$

Now we define (note that $\tilde{f}_1$ etc. are defined for all x)

$$\tilde{f}_{1k}(\eta) = \int_{-\infty}^{\infty} dx \; e^{-ikx} \tilde{f}_1(x,\eta) \tag{87}$$

$$\mathcal{G}_{1kk'}(\eta,\eta') = \int_{-\infty}^{\infty} dx \int_{-\infty}^{\infty} dx' \; G_1(x,\eta,x',\eta') e^{-i(kx + k'x')} \tag{88}$$

$$\tilde{J}_k = \int_{-\infty}^{\infty} dx \; e^{-ikx} \tilde{J}(x,\eta) \tag{89}$$

$$\tilde{q}_{k,k'}(\eta,\eta') = \int_{-\infty}^{\infty} dx \int_{-\infty}^{\infty} dx' \; \tilde{q}(x,\eta,x',\eta') \, e^{-i[kx + k'x']} \tag{90}$$

$$\tilde{j}_k = \int_{-\infty}^{\infty} dx \; e^{-ikx} \tilde{j}(x) \tag{91}$$

$$\tilde{E}_k = \int_{-\infty}^{\infty} dx\, e^{-ikx}\, \tilde{E}(x) \tag{92}$$

Now the formal solution of (79) with (87), (89) is trivial, taking the form

$$\tilde{f}_{1k}(\eta) = -\frac{i\,\tilde{J}_k(\eta)}{ku - \omega} \tag{93}$$

Similarly, from (86), (91), (92), one finds

$$\begin{aligned}\tilde{j}_k &= \frac{\omega}{4\pi}\left[+ i\,\tilde{E}_k - 2E_o\, P\left(\frac{1}{k}\right)\right] \\ &= - i \int d\eta\, \frac{u\,\tilde{J}_k(\eta)}{ku - \omega}\end{aligned} \tag{94}$$

where we have used (93) and the analog of (85).

The transform of (80) may be written in the form

$$\left[- i\omega + \tilde{H}_k(\eta,\underset{\sim}{s}) + H_{k'}(\eta',\underset{\sim}{-s})\right]\, \tilde{G}_{1kk'} = \tilde{q}_{kk'} \tag{95}$$

where on any function

$$\begin{aligned}\tilde{H}_k(\eta,\underset{\sim}{s})\, F(\eta,k,\underset{\sim}{s}) &= i\underset{\sim}{K}\cdot\underset{\sim}{v}\, F(\eta,k,\underset{\sim}{s}) \\ &+ \frac{2ie_\sigma}{m_\sigma \underset{\sim}{K}^2}\left(\underset{\sim}{K}\cdot\frac{\partial}{\partial \underset{\sim}{v}}\right) f_o \int d\eta'' \left[s\int_{-\infty}^{\infty} \frac{dk''}{(k''^2 + s^2)}\, F(\eta'',k'',s)\right. \\ &\left. - \pi\left(F(\eta'',k,\underset{\sim}{s}) + F(\eta'',-k,\underset{\sim}{s})\right)\right]\end{aligned} \tag{96}$$

and we have used the shorthand

$$\underset{\sim}{K} \equiv (k, \underset{\sim}{s}) \tag{97}$$

Clearly a formal solution of (96) may be written in the form

$$\tilde{G}_{1kk'}(\eta,\eta') = \int_0^\infty d\tau\, e^{i\omega\tau}\, e^{-\tau\left[H_k(\eta,\underset{\sim}{s}) + H_{k'}(\eta',-\underset{\sim}{s})\right]}$$

$$\tilde{q}_{kk'}(\eta,\eta',\underset{\sim}{s}) \tag{98}$$

Now the formal solution may be made more explicit by utilizing the properties of the $\tilde{H}_k$ operators in a manner similar to that utilized in a now famous paper by Dupree.[5] Let $f(\eta,k,\underset{\sim}{s})$ be any function, and define

$$F(\eta,k,\underset{\sim}{s},\tau) = e^{-\tau\, H_k(\eta,s)}\, f(\eta,k,\underset{\sim}{s}) \tag{99}$$

Then F satisfies

$$\frac{\partial F}{\partial \tau} + H_k F = 0 \tag{100}$$

$$F(\eta,k,\underset{\sim}{s},0) = f(\eta,k,\underset{\sim}{s}) \tag{101}$$

But, if $F(\eta,k,\underset{\sim}{s})$ is an even function of k, (100) with (96) is just the linearized, field-free, Vlasov-Poisson equation in a half-space,[6] and can be solved by standard means. Since the procedures are well known

we simply state the results. Defining

$$F(\eta,k,\underset{\sim}{s},\omega_1) = \int_0^\infty d\tau\, e^{i\omega_1\tau}\, F(\eta,k,\underset{\sim}{s},\tau) \quad , \tag{102}$$

one has

$$F(\eta,\underset{\sim}{K}) = \frac{-i}{(\underset{\sim}{K}\cdot\underset{\sim}{v} - \omega)}\left\{f(\eta,\underset{\sim}{K}) + \frac{D(\eta,\underset{\sim}{K})}{\Delta(\omega_1,\underset{\sim}{K})}\left[\int \frac{d\eta'' f(\eta'',\underset{\sim}{K})}{(\underset{\sim}{K}\cdot\underset{\sim}{v}'' - \omega_1)}\right.\right.$$

$$\left.\left. - \frac{s}{2\pi\varepsilon(\omega_1,s)}\int \frac{dk''}{(\underset{\sim}{K}'')^2\Delta(\omega_1,K'')}\int \frac{d\eta'' f(\eta'',\underset{\sim}{K}'')}{\underset{\sim}{K}''\cdot\underset{\sim}{v}'' - \omega_1}\right]\right\} \tag{103}$$

where

$$D(\eta,\underset{\sim}{K}) \equiv \frac{4\pi e_\sigma\left(\underset{\sim}{K}\cdot\frac{\partial}{\partial v}\right)f_o(\eta)}{m_\sigma K^2} \quad , \tag{104}$$

$$\Delta(\omega_1,K) = 1 - \int \frac{d\eta\, D(\eta,\underset{\sim}{K})}{\underset{\sim}{K}\cdot\underset{\sim}{v} - \omega_1} \tag{105}$$

is the ordinary plasma dispersion function, and

$$\varepsilon(\omega_1,s) \equiv 1 + \frac{s}{2\pi}\int \frac{dk'}{K'^2}\left(\frac{1}{\Delta(\omega_1,K')} - 1\right)$$

$$= \tfrac{1}{2}\left[1 + \frac{s}{\pi}\int \frac{dk'}{K'^2\Delta(\omega_1,K')}\right] \tag{106}$$

(here $\underset{\sim}{K}' = (k',\underset{\sim}{s})$ etc.) has previously been identified[6] as the dispersion relation for longitudinal plasma surface waves. Inasmuch as the operators $\exp[-\tau H_k(\eta,s)]$, $\exp[-\tau H_{k'}(\eta',-s)]$ commute, one may readily

compute the explicit relation between $\tilde{G}_{1kk'}$ and $\tilde{q}_{kk'}$ [eq.(98)]. Before giving the detailed results, however, we will make two further approximations: (A) as shown in the preceding section, we may write $f_o(\eta,x) = f_o^{(o)}(\eta) + f_o^{(1)}(\eta,x)$, where $f_o^{(1)}$ vanishes except in a sheath near the boundary, and is proportional to the plasma parameter. Since the correlation is already proportional to the plasma parameter, we replace f_o by $f_o^{(o)}$ in the correlation term. (B) We assume that the frequency ω is much greater than the collision frequency, so that we may write

$$\tilde{f}_{1k}(\eta) = \tilde{f}_{1k}^{(o)} + \tilde{f}_{1k}^{(1)} \quad , \quad \left|\frac{f_{1k}^{(1)}}{f_{1k}^{(o)}}\right| << 1 \quad , \tag{107}$$

where

$$\tilde{f}_{1k}^{(o)} = -\frac{i\,\tilde{J}_k^{(o)}}{ku - \omega} = \frac{ie_\sigma}{m_\sigma}\,\frac{\tilde{E}_k \frac{\partial}{\partial u} f_o^{(o)}(\eta)}{ku - \omega} \quad , \tag{108}$$

and replace $\tilde{f}_{1k}$ by $f_{1k}^{(o)}$ in the correlation terms. This is called the reactive approximation by Oberman, Ron and Dawson,[7] for reasons which should be apparent. Transforming Eqs.(81), (83), using the approximations (A),(B) above, and Eqs. (99), (102), (103), one finds

$$\tilde{J}_k(\eta) = -\frac{e_\sigma}{m_\sigma}\left\{\tilde{E}_k \frac{\partial}{\partial u} f_o^{(o)}(\eta) + \frac{1}{2\pi}\int dk'\, \tilde{E}_{k'} \frac{\partial}{\partial u} f_{o,k-k'}^{(1)}(\eta)\right.$$

$$\left. + \int d^2s \int d\eta' \int_{-\infty}^{\infty} dk_1 \int_{-\infty}^{\infty} dk_2\, K_1(k|k_1k_2)\, \tilde{G}_{1k_1k_2}(\eta,\eta')\right\} \quad , \tag{109}$$

$$\int d\eta'\, \tilde{G}_{1k_1k_2}(\eta,\eta') = \int_{-\infty}^{\infty} dk_3 \int_{-\infty}^{\infty} dk_4 \int d\eta'$$

$$\Big[K_2(k_1k_2,\eta\eta'|k_3k_4)\, \tilde{q}_{k_3k_4}(\eta,\eta')$$

$$+ \int d\eta'' K_3(k_1k_2,\eta,\eta'|k_3k_4,\eta'')\ \tilde{q}_{k_3k_4}(\eta'',\eta')\Bigg] \tag{110}$$

and

$$\tilde{q}_{k_3k_4}(\eta,\eta') = \int_{-\infty}^{\infty} dk'\ K_4(k_3k_4,\eta,\eta'|k')\ \tilde{E}_{k'} \tag{111}$$

Here $$\tilde{f}^{(1)}_{o,k}(\eta) = f^{(o)}_o(\eta) \int_{-\infty}^{\infty} dx\, e^{-ikx}\ n_1(|x|) \quad , \tag{112}$$

with n_1 given (for the singly ionized case) by (57), (44). After doing a number of straightforward, if tedious integrals, one finds for the kernels K_j the expressions (note K_1 is an operator)

$$K_1(k|k_1k_2) = + \frac{i}{(2\pi)^3(s^2 + k_2^2)}\Bigg\{2\pi\Big[\delta(k_2 + k_1 - k) + \delta(k_1 - k_2 - k)\Big] - \frac{2s}{s^2 + (k_1-k)^2}\Bigg\}\left((k_1-k)\frac{\partial}{\partial u} - \underset{\sim}{s}\cdot\frac{\partial}{\partial \underset{\sim}{v_\perp}}\right) \tag{113}$$

$$K_2(k_1k_2,\eta\ \eta'|k_3k_4) = \frac{\delta(k_3-k_1)}{2\pi}\int_{-\infty}^{\infty}\frac{d\omega'}{(k_1u + \underset{\sim}{s}\cdot\underset{\sim}{v_\perp} - \omega' - io)}$$

$$\times\left(\frac{1}{\Delta(\omega-\omega',\sqrt{k_2^2+s^2})}\right)\Bigg[\frac{\delta(k_4-k_2)}{(k_2u'-\underset{\sim}{s}\cdot\underset{\sim}{v_\perp'}-\omega+\omega'-io)} + \frac{s\left(\Delta(\omega-\omega',\sqrt{k_2^2+s^2}) - 1\right)}{2\pi\varepsilon(\omega-\omega',s)}$$

$$\times\ \frac{}{(k_4^2+s^2)\ \Delta(\omega-\omega',\sqrt{k_4^2+s^2})\,(k_4u'-\underset{\sim}{s}\cdot\underset{\sim}{v_\perp'}-\omega+\omega'-io)}\Bigg] \tag{114}$$

$$K_3(k_1k_2,\eta\ \eta'|k_3k_4,\eta'') = \frac{1}{2\pi}\int_{\infty}^{-\infty} \frac{d\omega'\ D(\eta,\ k_1,\ \underset{\sim}{s})}{\Delta(\omega-\omega',\sqrt{k_2^2+s^2})\Delta(\omega',\sqrt{k_1^2+s^2})(k_1u+\underset{\sim}{s}\cdot\underset{\sim}{v_\perp}-\omega'-io)}$$

$$\times\left\{\frac{\delta(k_3-k_1)\ \ \delta(k_4-k_2)}{(k_2u'-\underset{\sim}{s}\cdot\underset{\sim}{v_\perp'}-\omega+\omega'-io)(k_1u''+\underset{\sim}{s}\cdot\underset{\sim}{v_\perp''}-\omega'-io)}\right.$$

$$+\ \frac{s\delta(k_1-k_3)\ \left(\Delta(\omega-\omega',\sqrt{k_2^2+s^2})\ -\ 1\right)\Big/\ (2\pi)}{(k_4u'-\underset{\sim}{s}\cdot\underset{\sim}{v_\perp'}-\omega+\omega'-io)\varepsilon(\omega-\omega',s)(k_4^2+s^2)\Delta(\omega-\omega',\sqrt{k_4^2+s^2})(k_1u''+\underset{\sim}{s}\cdot\underset{\sim}{v_\perp''}-\omega'-io)}$$

$$-\ \frac{s\delta(k_4-k_2)}{(2\pi)\varepsilon(\omega',s)(k_3^2+s^2)\Delta(\omega',\sqrt{k_3^2+s^2})(k_2u'-\underset{\sim}{s}\cdot\underset{\sim}{v_\perp'}-\omega+\omega'-io)(k_3u''+\underset{\sim}{s}\cdot\underset{\sim}{v_\perp''}-\omega'-io)}$$

$$-\ \frac{s^2\left(\Delta(\omega-\omega',\sqrt{k_2^2+s^2})\ -\ 1\right)}{(2\pi)^2\varepsilon(\omega',s)\varepsilon(\omega-\omega',s)(k_3^2+s^2)(k_4^2+s^2)\Delta(\omega',\sqrt{k_3^2+s^2})\ \ \Delta(\omega-\omega',\sqrt{k_4^2+s^2})}$$

$$\times\ \frac{1}{(k_3u''+\underset{\sim}{s}\cdot\underset{\sim}{v''}-\omega'-io)(k_4u'-\underset{\sim}{s}\cdot\underset{\sim}{v_\perp'}-\omega+\omega'-io)} \tag{115}$$

and

$$K_4(k_3k_4,\eta\ \eta'|k') = \frac{2e_\sigma e_{\sigma'}}{m_\sigma}\left\{2\pi\delta(k'-k_3-k_4)\right.$$

$$\left[-\ \frac{e_\sigma f_o^{(o)}(\eta')}{(\kappa^2+k_4^2+s^2)m_\sigma}\ \left((k_3-k')\ \frac{\partial}{\partial u}+\underset{\sim}{s}\cdot\frac{\partial}{\partial\underset{\sim}{v_\perp}}\right)\left(\frac{\frac{\partial}{\partial u}\ f_o^{(o)}(\eta)}{k'u\ -\ \omega}\right)\right.$$

$$+ \frac{\beta e_\sigma \, f_o^{(o)}(\eta')}{(k_4^2+s^2+\kappa^2)} \frac{\partial f_o^{(o)}(\eta)}{\partial u}$$

$$- \frac{e_{\sigma'}\left(\partial f_o^{(o)}(\eta')/\partial u'\right)}{(k_3^2+s^2)(k'u'-\omega)} \left(k_3 \frac{\partial}{\partial u} + \underset{\sim}{s} \cdot \frac{\partial}{\partial \underset{\sim}{v_\perp}}\right) f_o^{(o)}(\eta) \Bigg]$$

$$+ \frac{2\pi\delta(k'+k_4-k_3) \, f_o^{(o)}(\eta')}{(k_4^2+s^2+\kappa^2)} \Bigg[\beta e_\sigma \frac{\partial f_o^{(o)}(\eta)}{\partial u}$$

$$- \frac{e_\sigma}{m_\sigma}\left((k_3-k')\frac{\partial}{\partial u} + \underset{\sim}{s} \cdot \frac{\partial}{\partial \underset{\sim}{v_\perp}}\right) \frac{\partial f_o^{(o)}(\eta)/\partial u}{k'u-\omega} \Bigg]$$

$$- \frac{2\pi e_{\sigma'} \, \delta(k'+k_3-k_4) \, (\partial f_o^{(o)}(\eta')/\partial u')}{m_{\sigma'}(k_3^2+s^2)(k'u'-\omega)} \left(k_3 \frac{\partial}{\partial u} + \underset{\sim}{s} \cdot \frac{\partial}{\partial \underset{\sim}{v_\perp}}\right)(f_o^{(o)}(\eta)$$

$$+ \frac{2s e_\sigma \, f_o^{(o)}(\eta')}{m_\sigma(k_4^2+s^2+\kappa^2)} \left[\frac{1}{(k_3-k')^2+s^2} - \frac{\sqrt{\kappa^2+s^2}-s)}{\left(\sqrt{\kappa^2+s^2}+s\right)\left((k_3-k')^2+s^2+\kappa^2\right)} \right]$$

$$\times \left[(k_3-k') \frac{\partial}{\partial u} + \underset{\sim}{s} \cdot \frac{\partial}{\partial \underset{\sim}{v_\perp}} \right] \left[\frac{\partial f_o^{(o)}(\eta)/\partial u}{k'u-\omega} \right]$$

$$- \frac{4\beta s\sqrt{\kappa^2+s^2} \, e_\sigma \, (\partial f_o^{(o)}(\eta)/\partial u) f_o^{(o)}(\eta')}{\left(k_4^2+s^2+\kappa^2\right)\left((k_3-k')^2+s^2+\kappa^2\right)\left(\sqrt{\kappa^2+s^2}+s\right)} \Bigg\}$$

$$+ (k_3 \leftrightarrow k_4 \, , \; \underset{\sim}{s} \to -\underset{\sim}{s} \, , \; \eta \leftrightarrow \eta') \quad . \tag{116}$$

Substitution of (109) - (116) into (94) yields an integral equation for $\tilde{E}_k$ of the form

$$\tilde{E}_k\left[1 - K_k - N_k\right] = - 2iE_o\ P\left(\frac{1}{k}\right) + \int_{-\infty}^{\infty} dk' M(k,k')\ \tilde{E}_{k'} \tag{116}$$

Here

$$K_k \equiv \frac{4\pi}{\omega} \int d\eta\ \frac{e_\sigma\ u\ \partial f_o^{(o)}(\eta)/\partial u}{m_\sigma\ (ku - \omega)} = \frac{4\pi}{\omega} \sum_\sigma \frac{n_\sigma\ e_\sigma^2}{m_\sigma} \int \frac{du\ u\ F_o'(u)}{ku - \omega} \tag{117}$$

is a generalization of Landau's K_k to multicomponent plasmas.

The correlation contributions N_k , $M(k,k')$ are known, but it is clear from (109) - (116) that they are quite complicated in general (especially M) . However, certain properties may be deduced from (94), (109) - (116) without writing the explicit forms for N , M . We note the following: (a) N_k is an even function of k (as is K_k) . (b) Comparison with the infinite plasma case shows that $K_k + N_k$ is simply related to the conductivity one would calculate by transforming the infinite space Vlasov equation (assuming f_1 , E depend only on the particular direction x) and using the reactive approximation to obtain a linear relation between the transformed current density and field. In fact

$$K_k + N_k = - \frac{4\pi i}{\omega}\ \sigma_k^\infty \tag{118}$$

where the superscript ∞ refers to the infinite space conductivity as described above. The limiting case σ_o^∞ has been studied in considerable

detail by Oberman, Ron and Dawson,[7] and some progress has been made on the $k \neq 0$ case.[8,9] Eq. (118) forms a useful bridge between the infinite and semi-infinite problems. (c) Some simple manipulations of the dummy variables η, η', η'' show that N_o vanishes for the one-component case (electron gas in a positive background), corresponding to the well known fact that the electron-electron contribution to σ_k^∞ (and the related correlation damping) is $O(k^2)$ whereas the electron-ion contribution is finite as $k \to 0$.

Turning now to the integral term, which clearly represents the effects of the perfectly reflecting boundary, we note the following: (α) $M(k,k')$ has no singularities for any k or k' . (β) The integral $I(k) = \int dk'$ $M(k,k')\, E_{k'}$ is an odd function of k , and vanishes as $k \to 0$. (γ) If $E_{k'}$ has no singularities worse than $P(1/k')$, $I(k)$ is well defined for all k . Furthermore, if $E_{k'} = \psi(k')\, P(1/k')$, where $\psi(k')$ and all its derivatives are absolutely integrable in any finite interval including the origin and behave no worse than k'^2 as $k' \to \infty$, $I(k)$ and all its derivatives exist and are absolutely integrable on $(-\infty,\infty)$.

From property (α) above, together with standard Fourier analysis,[10] it is clear that the integral term does not contribute to the limiting value of the field at large distances from the plate. In fact

$$E(\infty) \equiv \lim_{x\to\infty} \frac{1}{2\pi} \int_{-\infty}^{\infty} dk\, \exp^{ikx}\, E_k = \lim_{x\to\infty} \frac{iE_o}{\pi}\, P\int_{-\infty}^{\infty} \frac{dk\, \exp^{ikx}}{k[1-K_k-N_k]} = \frac{E_o}{1-K_o-N_o} \tag{119}$$

Eq.(119) has the form

$$E(\infty) = \frac{E_o}{D_o} \tag{120}$$

where D_o is the <u>total</u> effective dielectric constant, <u>including correlation contributions.</u> From (118) and Ref. 7 [Eqs. (58), (59), (57), (37)] one has that

$$N_o = \left(\frac{-e^2\omega^2/\kappa^2}{3\pi m\,\omega^3}\right)\int_0^{k_o} \frac{dk\;k\;f_e^{(+)}(\omega/k)}{(k^2+\kappa^2)\;\Delta_o(\omega,k)}\left[1 + o\left(\frac{m}{M}\right)\right] \tag{121}$$

Here $k_o \sim (\Theta/e^2)$ is an arbitrary cutoff which is necessitated by the usual short range divergence, and Δ_o is the infinite ion mass limit of Eq. (105). Inasmuch as the cutoff procedure is known to give only the "dominant" i.e. logarithmic terms correctly, we may use the limiting forms of $f_e^{(+)}$, Δ_o for large k in the integrand of (121), i.e.

$$\left.\begin{aligned} & f_e^{(+)}(\omega/k) \to \pi i\; f_e(o) = \pi i\sqrt{\frac{m}{2\pi\Theta}} \\ & \Delta_o \to 1\;, \quad (\omega/k) \ll \sqrt{\Theta/m} \end{aligned}\right\} \tag{122}$$

to obtain

$$N_o = -\frac{i\omega_p^3\;\varepsilon}{3\sqrt{\pi}\;\omega^3}\,\ell n\left(\varepsilon^{-1}\right)\left[1 + 0\left(\frac{m}{M}\right) + 0\left(\frac{1}{\ell_n(\varepsilon^{-1})}\right)\right] \tag{123}$$

where ε is the electron plasma parameter [cf. Eq. (43)]. Since ε is small by assumption, the correlation contribution L_o will be negligible unless

$$1 - K_o = 1 - \frac{\omega_p^2}{\omega^2} \tag{124}$$

is also small, specifically

$$\left| \frac{\omega - \omega_p}{\omega_p} \right| \leqslant \varepsilon \ln \varepsilon^{-1} \quad . \tag{125}$$

In particular, as $\omega \to \omega_p$, one has

$$E(\infty) \to - \frac{3i\sqrt{\pi}\, \omega^3}{\omega_p^3\, \varepsilon \ln(\varepsilon^{-1})} E_o \ , \quad \omega \to \omega_p \tag{126}$$

so that the field at ∞ is 90° out of phase and much larger than the applied field in this limit. This is, of course, the expected plasma resonance, which could have been predicted qualitatively by replacing ω by $\omega + i\nu$ in the collisionless result. From (126) it is clear that the effective collision frequency is given by

$$\nu = \frac{\omega_p\, \varepsilon \ln \varepsilon^{-1}}{6\sqrt{\pi}} \tag{127}$$

As for the way in which the field approaches the limiting value (119), one may make the following remarks: (1) Successive approximation methods, together with property (γ) above and standard Fourier transform theory[10] show that the contribution of the integral term vanishes faster than any inverse power of x for large x . Little more can be said about the integral term without calculating $M(k,k')$ in more detail. This calculation is quite complicated, and will be deferred for future work. We might add that a superficial study of Eqs. (109) - (116) should convince the reader that the notation is appropriate (M is for "monster"!) (2) If the integral term is neglected, one finds

$$E(x) \to E^{(o)}(x) = -\frac{i\,E_o}{\pi}\; P\int_{-\infty}^{\infty} \frac{dk\,\exp^{ikx}}{k[1 - K_k - L_k]} \quad . \tag{128}$$

An analysis similar to Landau's shows that we may write

$$E^{(o)} = E(x) + E_1(x) + E_2(x) \tag{129}$$

where $E_1(x)$ behaves as

$$\frac{\exp^{-(\kappa x)^{2/3}}}{(\kappa x)^{2/3}} \quad \text{for large } x$$

and differs only slightly from Landau's asymptotic result, whereas E_2 decays exponentially on a length scale given by

$$\ell = \frac{\omega_p \sqrt{\Theta/m}}{\omega^2 \sqrt{|1 - K_o - N_o|}} \quad . \tag{130}$$

In particular, ℓ attains its maximum value at resonance $(\omega \to \omega_p)$

$$\ell_{max} = \lambda_D \sqrt{\frac{2}{3\sqrt{\pi}\;\varepsilon\;\ell n\;\varepsilon^{-1}}} \quad , \tag{131}$$

where

$$\lambda_D \equiv \kappa^{-1} \tag{132}$$

is the total Debye length. Thus, at resonance, the field approaches its limiting value on a length scale which is approximately the geometric mean of the Debye length and effective mean free path.

Finally we consider the implications of our results for the more realistic problem of the plasma capacitor. If the plate spacing of the capacitor is d and $(\ell/d) << 1$, where ℓ is given by (130), the two problems are simply related. If the potential between the plates is V, then

$$V = + \int_0^d dx\, E(x) = + dE(\infty) \left[1 + 0\left(\frac{\ell}{d}\right)\right] \tag{133}$$

where $E(\infty)$ is given by (126) plus corrections of order $(\kappa d)^{-1}$. If the plates are perfectly reflecting, there is no particle current across them, so that the current is just the displacement current at the plates, i.e.

$$I = - i\omega A\, E_o/4\pi \quad , \tag{134}$$

where A is the plate area. Thus the impedance is given by

$$Z \equiv (V/I) \cong \frac{4\pi d\, E(\infty)}{-i\omega A\, E_o} = \frac{i}{\omega C_o D_o} \tag{135}$$

where we have used (120) and C_o is the capacitance of the empty capacitor. In view of (118), Eq. (135) may be written as

$$Z = \frac{1}{C_o[4\pi\sigma_o^\infty - i\omega]} \tag{136}$$

which relates the plasma capacitor impedance to the infinite space conductivity as calculated by Oberman, Ron and Dawson.[7] In view of (123), (124), we can also relate the result of (136) to the equivalent parallel resonant circuit shown in Figure 1. A more detailed study of the finite capacitor,

such as has been carried out in the Vlasov limit by Hall[11], and Shure[12], shows that, in general, the equivalent circuit is more complicated, and the resonance is multiple. However, if κd is sufficiently large, the secondary peaks cannot be distinguished, and Fig. 1 gives a good description of the response to an applied potential.

V. DISCUSSION

We have shown how "Coulomb collisions" may rigorously be taken into account for the system of a fully ionized plasma confined to a half-space by a perfectly reflecting boundary. The only previous attempts to introduce "collisions" into finite or semi-infinite geometry, non-equilibrium theory have used the relaxation model[11,13]. We have seen that, while a rather formidable amount of mathematics is involved, the problem of treating correlations rigorously is not too intractable.

We will briefly discuss the limitations of the present work. These may be listed as follows: (1) The non-equilibrium theory is linear, and so is limited to small perturbing fields. (2) The non-equilibrium theory is limited to high frequency (compared to the effective collision frequency) perturbation. Otherwise,we would have to solve coupled integral equations for f_1 and E . (3) The details of the non-equilibrium sheath depend on the solution of an integral equation with a known, but complicated kernel. However, the limiting value of the field at large distances from the boundary was shown to be simply related to the infinite space conductivity as calculated by Oberman, Ron,and Dawson. While the detailed study of the integral term is reserved for future work,it appears from

the way in which many of the terms arise that their effect may be limited to a region of a few Debye lengths near the boundary. (4) The limitations of the model have been discussed previously[6]. Generalization to more realistic geometries, especially slab geometry appears to present no great difficulties, but the feasibility of treating more realistic boundary conditions remains an open question.

ACKNOWLEDGEMENT

This work was supported in part by the National Aeronautics and Space Administration under Grant NGL 21-002-005.

FOOTNOTES

1. L.D. Landau, J.Phys. (U.S.S.R.) 10, 25 (1946)
2. E. Pinney, Phys.Fluids 10, 1619 (1967)
3. It could be argued that we should also allow the temperature to have an x dependence; however the density will have an x dependence even in true thermal equilibrium (as opposed to "local" equilibrium) where the temperature is constant.
4. The constant A could also have been obtained by requiring that ρ satisfy the equation obtained by multiplying (42) by e_σ and summing.
5. T. Dupree, Phys.Fluids 4, 696 (1961)
6. R. Guernsey, Phys.Fluids (to be published)
7. C. Oberman, A. Ron, and J. Dawson, Phys.Fluids 5, 1514 (1962)
8. J. Fu, dissertation, U. of Michigan (1967) and private communication
9. O. De Barbieri, private communication
10. M.J. Lighthill "Introduction to Fourier Analysis and Generalized Functions"(Cambridge University Pres,, 1962), Chapter 4.
11. R. Hall, Am.J.Phys. 31, 696 (1963)
12. F. Shure, Plasma Physics - Accelerators-Thermonuclear Res. (GB) 6,1 (1964)
13. E. Weibel, Phys.Fluids 10, 741 (1967).

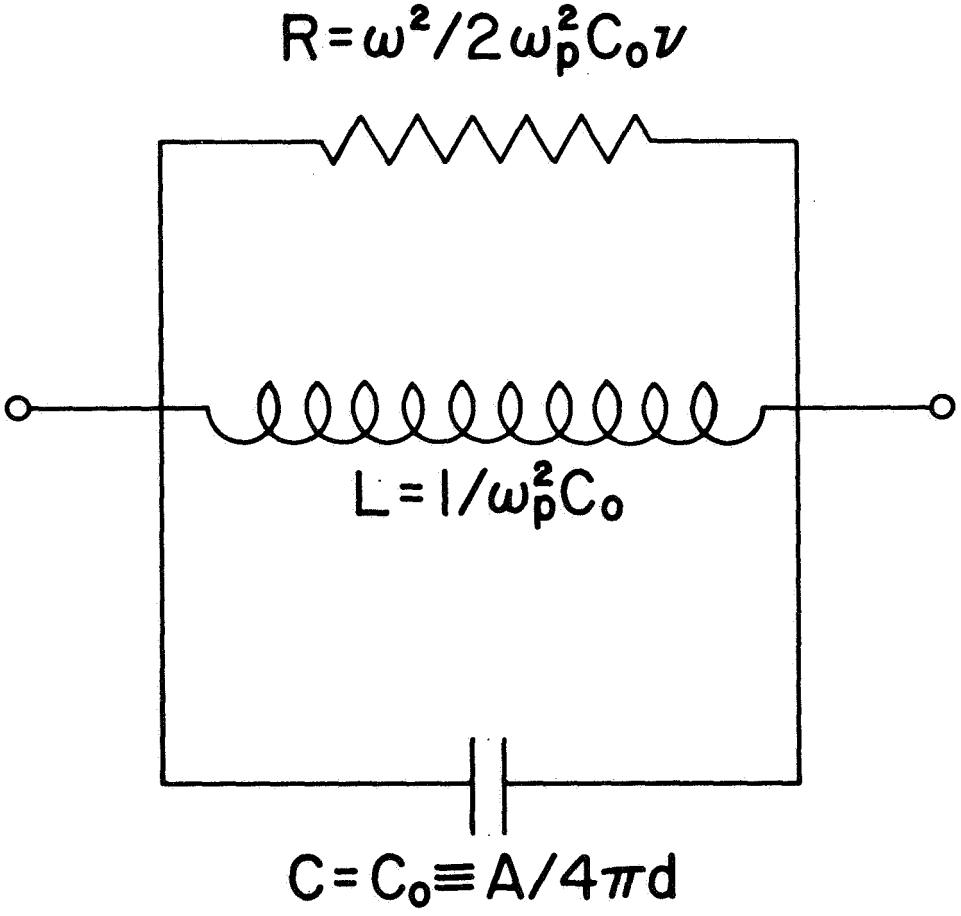

Fig. 1. Equivalent circuit for large plasma capacitor.