NASA TECH BRIEF

NASA Tech Briefs announce new technology derived from the U.S. space program. They are issued to encourage commercial application. Tech Briefs are available on a subscription basis from the Clearinghouse for Federal Scientific and Technical Information, Springfield, Virginia 22151. Requests for individual copies or questions relating to the Tech Brief program may be directed to the Technology Utilization Division, NASA, Code UT, Washington, D.C. 20546.

Fast-Acting, Four-Way Slide Valve

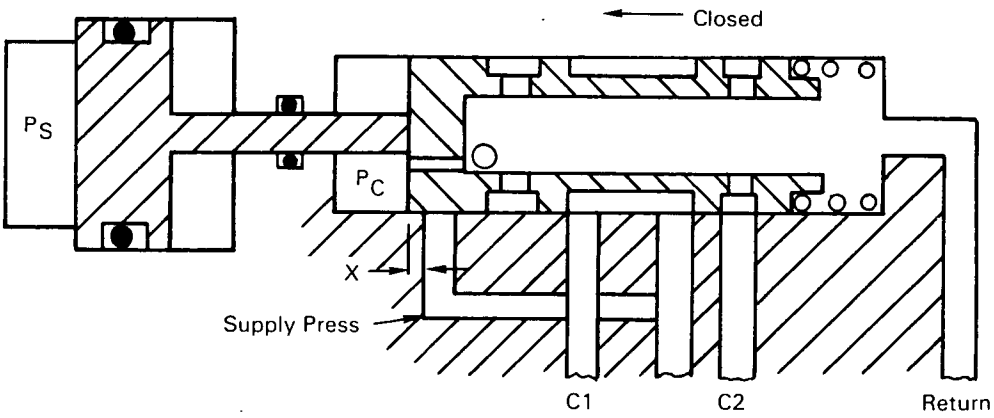

This valve design represents the response to the need for a fast-acting four-way valve that is insensitive to fluctuating sense pressure. The valve is currently in use.

The valve design has many potential applications in the hydraulics field. Operating principles are described below.

Cavity pressure P_c is maintained at a low level by the combination of overlap X and the size of orifice O. Increasing sense pressure P_s initiates valve movement against the preloaded spring. Overlap X decrease causes cavity pressure P_c to rise sharply. The opening force on the spool is now greater than the preload on the spring and the valve snaps to full-open position. The valve remains in full-open position until the supply pressure is removed. The spool position is not affected by variations in sense pressure P_s.

Note:

Requests for further information may be directed to:

Technology Utilization Officer
Marshall Space Flight Center
Huntsville, Alabama 35812
Reference: B70-10228

Patent status:

No patent action is contemplated by NASA.

Source: M. Kimmel and J. Absalom of
North American Rockwell Corp.
under contract to
Marshall Space Flight Center
(MFS-18608)

Category 07

This document was prepared under the sponsorship of the National Aeronautics and Space Administration. Neither the United States Government nor any person acting on behalf of the United States Government assumes any liability resulting from the use of the information contained in this document, or warrants that such use will be free from privately owned rights.