~~ARMSTRONG~~ Brazill

NASA TECHNICAL
MEMORANDUM

NASA TM X-64507

AN ANALYSIS OF POTENTIAL SPACE SHUTTLE CARGO-HANDLING MODES OF OPERATION

By Walter E. Whitacre

Orbital Systems Group
Advanced Systems Analysis Office
Program Development

February 27, 1970

NASA

George C. Marshall Space Flight Center
Marshall Space Flight Center, Alabama

MSFC - Form 3190 (September 1968)

TECHNICAL REPORT STANDARD TITLE PAGE

1. REPORT NO. TM X-64507	2. GOVERNMENT ACCESSION NO.	3. RECIPIENT'S CATALOG NO.
4. TITLE AND SUBTITLE An Analysis of Potential Space Shuttle Cargo-Handling Modes of Operation		5. REPORT DATE February 27, 1970
		6. PERFORMING ORGANIZATION CODE PD-SA-O
7. AUTHOR(S) Walter E. Whitacre		8. PERFORMING ORGANIZATION REPORT #
9. PERFORMING ORGANIZATION NAME AND ADDRESS Orbital Systems Group Advanced Systems Analysis Office Program Development Marshall Space Flight Center, Alabama 35812		10. WORK UNIT NO.
		11. CONTRACT OR GRANT NO.
12. SPONSORING AGENCY NAME AND ADDRESS		13. TYPE OF REPORT & PERIOD COVERED Technical Memorandum
		14. SPONSORING AGENCY CODE

15. SUPPLEMENTARY NOTES

16. ABSTRACT

This report attempts to indicate the current status of Space Shuttle cargo-handling analysis. The problems involved in orbital docking, payload extraction and transfer, cargo handling, and special purpose missions are discussed and some tentative conclusions and recommendations are presented.

17. KEY WORDS Space Shuttle Space Cargo Handling Shuttle Cargo	18. DISTRIBUTION STATEMENT STAR Announcement W. G. Huber W. G. HUBER Director, Advanced Systems Analysis Office

19. SECURITY CLASSIF. (of this report)	20. SECURITY CLASSIF. (of this page)	21. NO. OF PAGES	22. PRICE
Unclassified	Unclassified	67	$3.00

MSFC - Form 3292 (May 1969)

TABLE OF CONTENTS

		Page
SUMMARY		vii
SECTION I	INTRODUCTION AND BACKGROUND	1
SECTION II	PROPELLANT DELIVERY	3
SECTION III	PERSONNEL AND CARGO DELIVERY	9
	A. General Requirements	9
	B. Modular Approach	9
	C. Module Sizing Analysis	13
	D. Comparison of 4-Man Module and 6-Man Orbiter Cabin	13
	E. Integral Propellant/Tank Transfer Operations	18
	F. General Docking Considerations	22
	1. General Control Considerations	22
	2. Visibility and Illumination	26
	3. Docking/Cargo-Transfer Considerations	30
SECTION IV	SPECIAL MISSIONS	46
	A. Delivery and Deployment of Propulsive Stages and Payloads	46
	B. Satellite Placement, Retrieval, and Maintenance	47
	C. Short-Duration Missions	50
	D. Rescue	50
SECTION V	CONCLUSIONS AND RECOMMENDATIONS	57
	A. Tentative Conclusions	57
	B. Recommendations	57
REFERENCES		59

LIST OF ILLUSTRATIONS

Figure	Title	Page
1.	OPSF concepts (using rotational acceleration for transfer)	4
2.	OPSF (linear acceleration transfer concept)	6
3.	Delivery of propellant to the OPSF	8
4.	Two possible cargo accommodation and transfer modes	11
5.	Personnel module size requirements	14
6.	Schematic concepts of orbiter, 6-man cabin, 4-man personnel/module, and 12-man personnel/module	15
7.	Typical methods of cargo container attachment	19
8.	Cargo unloading sequence (removal of cargo mounted above rails)	20
9.	Space Shuttle propellant tank transfer concept	23
10.	Docking control geometry	25
11.	Space Station model	27
12.	Docking sun angle	28
13.	On-orbit payload-extraction concepts	32
14.	Methods of on-orbit payload transfer	36
15.	Cargo/personnel module delivery and transfer	37
16.	Payload transfer sequence with Space Tug	37
17.	Methods of docking payload to Space Station	38

LIST OF ILLUSTRATIONS (Concluded)

Figure	Title	Page
18.	Crew-access tunnel placement 4	41
19.	Deployment of a propulsive stage/payload	46
20.	Basic satellite servicing concepts	48
21.	Short-duration earth-orbital observation missions	51

LIST OF TABLES

Table	Title	Page
1.	NASA Mission Traffic Model	2
2.	Liquid Hydrogen Cargo-Payload Capacity Utilization	3
3.	Routine Logistics Requirements for a 12-Man Space Station (Per Quarter)	9
4.	Payload-Extracting Concept Assessment	33
5.	On-Orbit Payload Transfer Assessment	35
6.	Docking Configuration Assessment	39
7.	Crew-Cabin-To-Payload Tunnel Assessment	40
8.	Methods of On-Pad Passenger Quick Exit	42
9.	Passenger On-Pad Quick Egress Method Assessment	43
10.	Quick-Exit Tunnel Assessment	44
11.	Possible Earth Survey Missions	53
12.	Potential Major Space Station Emergencies	55

SUMMARY

This report attempts to indicate the current status of Space Shuttle cargo handling analysis. It is intended for use by the various organizations operating in support of the Space Shuttle effort who are investigating problems not necessarily affected by the frequent configuration and approach changes imposed on the primary task team and contractor personnel.

The various studies have been analyzed and the results interwoven with the results of in-house efforts. The problems involved in orbital docking, payload extraction and transfer, cargo handling, and special-purpose missions are discussed and some tentative conclusions and recommendations are presented.

This report has been reviewed and approved for release by the MSFC Shuttle Task Team. However, no statements made herein should be interpreted as position statements with respect to the Space Shuttle, the direction of future efforts, or intended methods of operation. This document reflects the view of the author, following analysis of the data available, and should not be construed as an official recommendation.

AN ANALYSIS OF POTENTIAL SPACE SHUTTLE CARGO-HANDLING MODES OF OPERATION

SECTION I. INTRODUCTION AND BACKGROUND

The past decade has seen rather significant advancements in our overall capabilities as a space-faring nation. The orbital payloads have increased from the size of a basketball to the size of the 6- to 12-man space stations now possible with Saturn V type vehicles. However, NASA is now engaged in an effort to develop a low-cost means of transporting large payloads to earth orbit so that a balanced space program can be conducted with significantly lower delivery costs.

During the last few years, several studies have been made of Space Shuttle concepts that would provide this capability. These initial studies were sized to accommodate payloads on the order of 10 000 pounds and 3000 cubic feet. In 1969, however, four funded studies were conducted that considered transportation of payloads up to 50 000 pounds with volumes up to 23 000 cubic feet. In addition, one unfunded study was conducted by the Martin Marietta Corporation. The results of these studies are given in References 1 through 5.

Using the results of these studies and the guidelines used by these contractors, a study has been conducted of the cargo handling to be performed with the currently envisioned modes of operation for this vehicle. This report attempts to indicate the current status of the Space Shuttle cargo-handling analysis and is intended for use by the various organizations operating in peripheral support of the Shuttle efforts. All of the vehicle interfaces discussed are intended to be representative of the current Shuttle concepts.

The traffic mix basis for this study is that presented in Reference 6. This model is shown in Table 1 and, with updating, is the one used by the contractor study teams in their recently completed efforts. This model indicates that the contemplated use of the Shuttle will be for propellant delivery, personnel and cargo delivery and special missions. Although the expected Initial Operational Capability (IOC) dates for the various program elements have changed since this model was originally issued, it is still believed that the traffic mix and general utilization patterns are appropriate for mission analysis. Therefore, the following discussion is divided into these three categories.

TABLE 1. NASA MISSION TRAFFIC MODEL

Mission	Year of Operation											Total Traffic	Percentage of Total
	1	2	3	4	5	6	7	8	9	10	11		
Delivery of Propellants													
Liquid Hydrogen (LH_2)				36	36	24	24	24	24	24	24	216	44.5
Liquid Oxygen (LO_2)				6	6	4	4	4	4	4	4	36	
Personnel and Cargo Delivery													
Space Station													
Personnel and cargo	4	4	4	4	4							20	
Experiment module	3	3	3	3	3							15	
Space Base													
Personnel and cargo						20	20	20	20	20	20	120	38.9
Experiment module						3	3	3	3	3	3	18	
Lunar Missions (Crew and Cargo)				6	6	6	6	6	6	6	6	48	
Delivery of Propulsive Stages and Payloads	1	7	8	3	4	6	5	2	7	5	3	51	9.0
Placement, Retrieval, Service, and Maintenance of Satellites	2	2	2	2	2	2	2	2	2	2	2	22	3.8
Short Duration Orbit/Space Rescue	2	2	2	2	2	2	2	2	2	2	2	22	3.8
Total Flights Per Year	12	18	19	62	63	67	66	63	68	66	64	568	100.0

SECTION II. PROPELLANT DELIVERY

One recent version of the Integrated Space Program (ISP) [7] indicates a possible buildup to a 1980 earth-orbital population of about 60 persons and a lunar population of perhaps 12 persons, with a possible requirement for about seven flights of a Nuclear Shuttle annually between earth orbit and lunar orbit to provide the needed supplies and personnel changeovers of this lunar population. The currently envisioned Nuclear Shuttle will consume about 300 000 pounds of liquid hydrogen (LH_2) per round trip or, for this frequency, about 2.1 million pounds per year.

Preliminary studies have established that a permanent Orbital Propellant Storage Facility (OPSF) with a capacity of about 150 000 cubic feet for LH_2 may be needed to improve the efficiency of the overall program. If this facility were also used as a resupply depot for the postulated Space Tug, as a filling station to supply LH_2 and oxygen propellants for high-energy, large payload propulsive stages for interplanetary missions (those which could not be launched from earth fully loaded), and as a supply depot for the Space Station, then it also may prove advantageous to have liquid oxygen (LO_2) storage capability aboard, perhaps as much as 1000 cubic feet.

Delivery of the propellants to this facility, or directly to any one of the major operational elements involved, could be accomplished by direct fluid transfer or by transfer of the propellant with its tank (container) as an integral unit. Three possible concepts for such a facility are shown in Figure 1. For propellant delivery, the largest volume requirements would be in connection with LH_2. Thus, a 50 000-pound Space Shuttle payload capacity could possibly be utilized as given in Table 2.

TABLE 2. LIQUID HYDROGEN CARGO-PAYLOAD CAPACITY UTILIZATION

Item	Volume (ft^3)	Weight (lb)
Liquid Hydrogen (4.37 lb/ft^3)	10 000	43 000
Ullage, Baffles, etc.	700	2 000
Tankage, Insulation, etc.	500	4 000
Transfer Mechanism	500	1 000

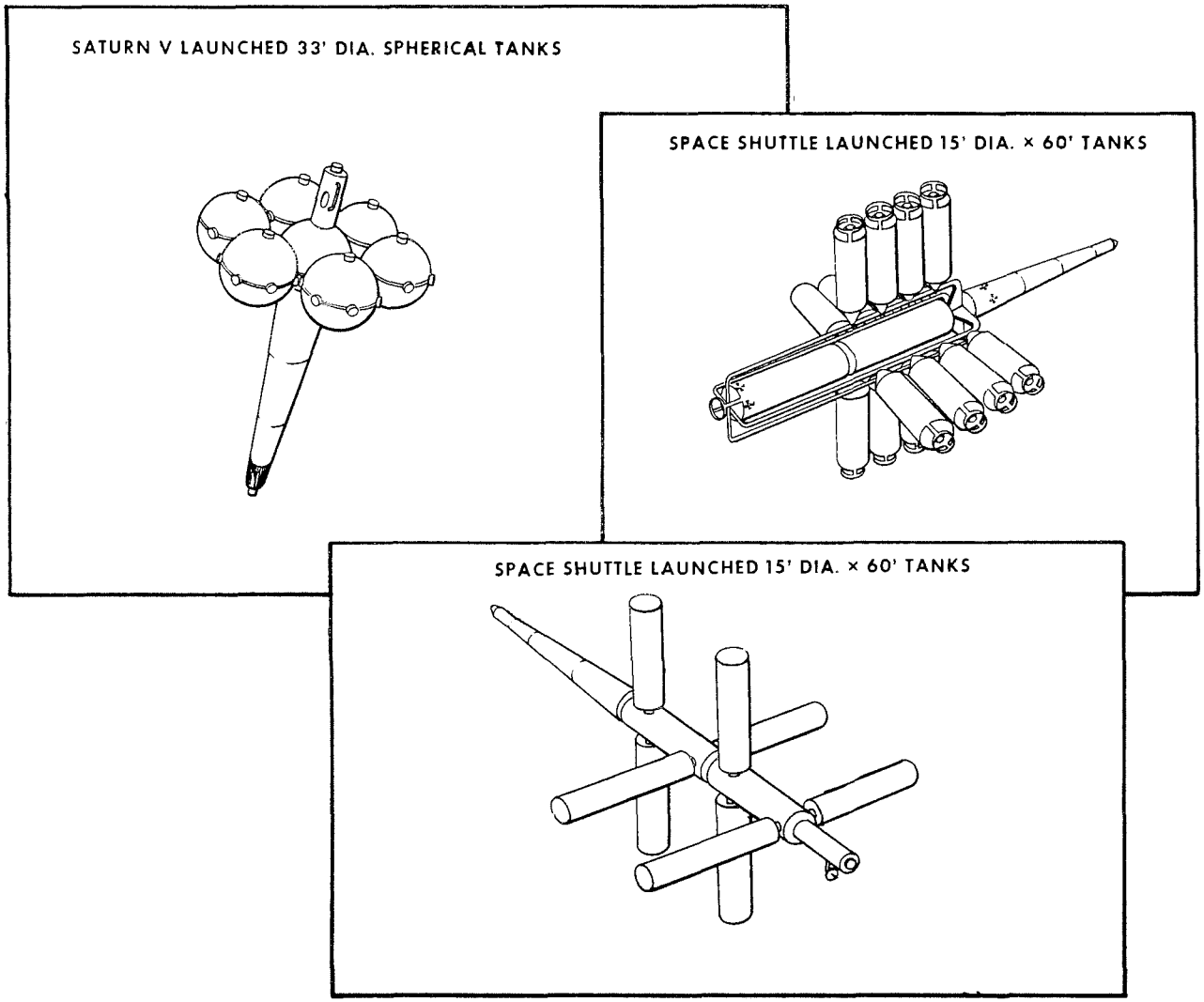

Figure 1. OPSF concepts (using rotational acceleration for transfer).

On this basis, it is estimated the the Shuttle cargo bay would possibly need an open, usable volume of not less than 12 000 cubic feet. If the hydrogen were transported to orbit in a slush condition (30-percent slush, 1.05 psia, 25° R), then this volume requirement could possibly be decreased by about 1000 cubic feet. However, the change from slush back to liquid would ultimately utilize 10 300 cubic feet with no allotment for ullage, etc. The current cargo-bay dimensions of 15 feet in diameter by 60 feet in length provide a total volume of about 10 600 cubic feet.

Recent studies of orbital refueling techniques and systems [8, 9, 10] suggest that fluid transfer of propellant alone from the Space Shuttle to the orbital storage facility in a neutralized gravity environment would be strongly limited by available technology. Metallic bladders for use in a positive expulsion method of fluid transfer do not appear to be available for use with cryogenics such as LO_2 and LH_2. Discussions with persons working in cryogen technology areas also suggest that such capability will probably not be available in the time frame currently being discussed (the late 70's).

All three of these studies [8, 9, 10] concluded that fluid mechanics (behavior) knowledge with respect to orbital transfer of cryogenic propellants is currently (and in the foreseeable future) insufficient for the design of fluid transfer systems to be operated in a neutralized gravity field. Therefore, it now appears that the propellants will have to be transferred from the Space Shuttle to the OPSF in an integral propellant/tank mode and from the OPSF to other systems in an artificial gravity field. This field can be created either by rotational or linear acceleration of the postulated tank farm. The concepts shown in Figure 1 would utilize rotation; linear acceleration would be used with configurations such as shown in Figure 2.

The use of rotational acceleration may bring technology problems in the areas of seals for nonrotating transfer hubs and attachments, coriolis acceleration effects, stabilization and control requirements, spin and despin thruster systems, etc. The linear acceleration mode of transfer may encounter both operations and technology problems in the areas of orbit changes, facility orientation, transfer times, etc. Additional investigation into the technology of cryogen transfer and into the solution of the potential problems enumerated above would probably be desirable.

The transfer of fluids in earth orbit will, generally, be affected by operation in the orbital environment. Some of the potential effects are:

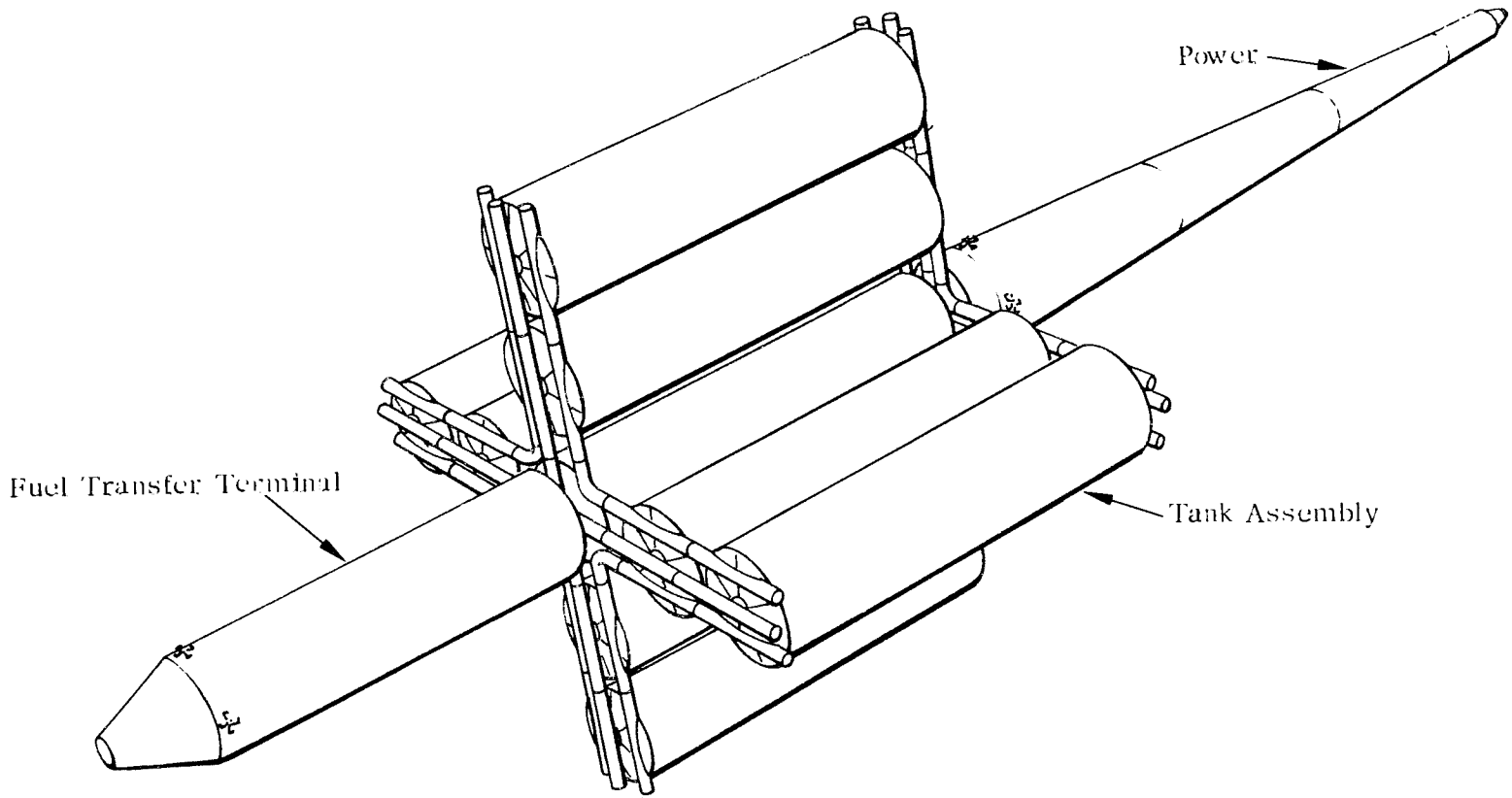

Figure 2. OPSF (linear acceleration transfer concept).

1. The general weightlessness of the fluids may cause problems in maintaining the desired liquid/gas interfaces, in orientation of the fluids, and in acquisition of the fluids by transfer devices such as pumps, etc; however, it appears that these problems will not be present if fluid transfer is conducted in an artificial "g" mode of operation.

2. Although the presence of a hard vacuum will be beneficial in case of spills, this vacuum may also present problems with respect to seals, micrometeoroid puncture, outgassing of materials, etc; however, it appears that the adoption of a tank exchange mode of operation for maintaining the propellant depot would tend to minimize these problems.

3. Use of Shuttle personnel to assist in the fluid transfer operations may be restricted or minimized because of the support equipment imposed limitations. If man is to operate outside of the Shuttle (in an extravehicluar manner — EVA), then life support, communications, thermal protection, and other links of support — in addition to rescue capability — will be needed. If he is to operate from within the Shuttle (in an intravehicular manner — IVA), then limitations may be imposed by the space available, view angles, monitoring activities, use of manipulators, etc.

However, the IVA mode of operation appears to present the least number of problems and in conjunction with development of a quick-disconnect tank exchange system for the tank farm appears to hold forth the greatest promise of success.

In addition to the possible technology difficulties mentioned above, the transfer process should also consider the effect of transfer efficiency. If it is assumed that each fluid transfer is 95-percent efficient, then double transfer of the propellant from the Shuttle to the OPSF in a fluid-only mode results in the Nuclear Shuttle receiving only about 90 percent of the propellant sent into orbit. The 10 percent is lost to residuals, leakage, boil-off, etc. Whereas, the use of the tank-plus-propellant method of operation can potentially effect an immediate 5-percent gain in utilization of propellant delivered to orbit. Thus, it appears that both available technology and operational efficiency tend to favor transfer of the propellant to the OPSF in a combined tank-plus-propellant method. Figure 3 presents one possible concept of this operational mode.

The problems associated with the physical transfer of the integral propellant tank units to the tank farm (OPSF) core are discussed in the section dealing with personnel/cargo operations because of the similarity to anticipated operational methods and potential problems which may be encountered in that area.

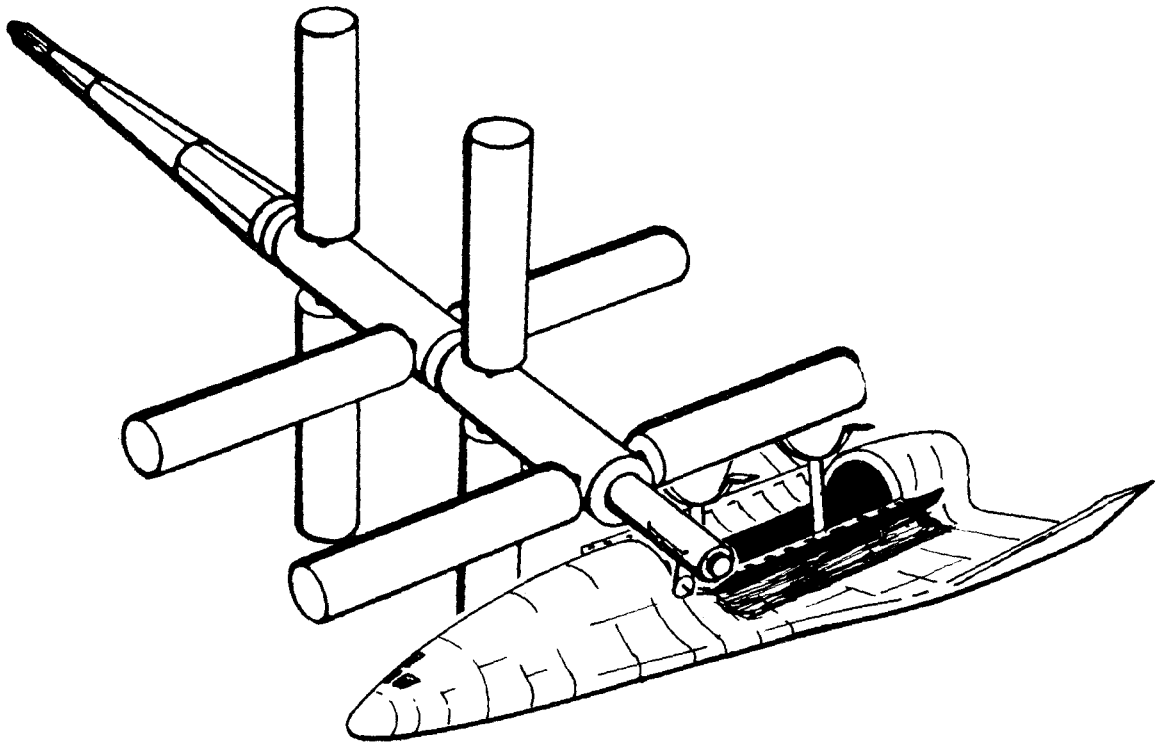

Figure 3. Delivery of propellant to the OPSF.

SECTION III. PERSONNEL AND CARGO DELIVERY

A. General Requirements

The Space Shuttle is intended to transport personnel and/or cargo to and from a manned Space Station and later on to a large Space Base research complex operating in low-altitude earth orbit. The personnel to be transported will include specially trained astronauts and nonastronaut-trained individual scientists and engineers who will conduct specific scientific and technology experiments and/or operations. The cargo will include foods, liquids, and gases in addition to experiment modules and operations-type equipments. Therefore, these Space Shuttle missions will be comprised of both long-lead-time scheduled resupply and crew rotations as well as unscheduled, discretionary flights. The actual cargo mix for the Space Station will depend on the number of men aboard and the type of operations and experiments being carried on at any given time. A recent estimate of quarterly requirements for a 12-man Space Station (provided by the MSFC Space Station Task Force during the study) is summarized in Table 3.

TABLE 3. ROUTINE LOGISTICS REQUIREMENTS FOR A 12-MAN SPACE STATION (PER QUARTER)

Up - Personnel	12 men
Cargo	12 000 lb
Down - Personnel	12 men
Cargo	7 000 lb

The Space Station studies now in progress may change these figures; however, the changes discussed to date would not negate the utility of these numbers for this analysis.

B. Modular Approach

The common-carrier mode of operation conceived for the Space Shuttle system requires efficient use of a minimum fleet of vehicles in logistics support of the Space Station/Base as well as a broad spectrum of

alternate missions. Fast turnaround for payload transfer is important to economic effectiveness, both on the ground and in orbital operations. This leads directly to functional requirements for standardized container modules and pallets that decouple payload preparation cycles from the logistics flight scheduling on the ground and in orbit. Additional functional requirements for deployment of modules in the vicinity of the Station/Base, or externally attached in some instances, must be recognized.

The Shuttle cargo bay, typically 15 feet in diameter, 60 feet long, and about 10 000 cubic feet in volume, is similar to that of cargo aircraft in that it has no provisions for cargo accommodation other than hard points for primary structural support loads. Therefore, payload accommodation weights must come out of the nominal 50 000-pound capability of the vehicle. Data currently available from commercial and military air cargo experience indicate a minimum penalty of about 1.25 pounds per cubic foot of total weight for packaging all types of cargo. This includes the weight of containers for separation and structures to withstand basic flight and landing loads and to be retained within the airframe. The extrapolation of this information by LMSC [2] indicates payload accommodation weights on the order of 20 to 25 percent of the Space Shuttle's nominal 50 000-pound capability.

During this study, two principal modes of cargo accommodation and transfer to the Space Station/Base have been considered (Fig. 4). One is the unpressurized accommodation of bulk containerized cargo with a pallet or space frame accepting the structural loads; the other is a pressurized cylindrical module with bulkheads and internal racks.

For the unpressurized pallet case, it was assumed that the Space Station/Base would be fitted with a large airlock or hangar that could accept the entire pallet from the Shuttle for subsequent unloading by the Space Station/Base crew. The pallet would translate into the airlock in a rigidly docked configuration. This type of operation would probably involve cycling of the airlock with each logistic operation.

The pressurized compartment of the alternate mode would include the necessary passenger accommodations on some flights in a mixed cargo/personnel mode of operation. One method of transfer would involve operations in a rigidly docked configuration. The pressurized compartment would translate out of the payload bay under mechanical constraint and connect with a hatch interface to accommodate pressurized transfer of personnel and cargo. With the weight penalty for cycling the airlock included, typical weights associated with delivery of an unpressurized pallet range between 8000 and

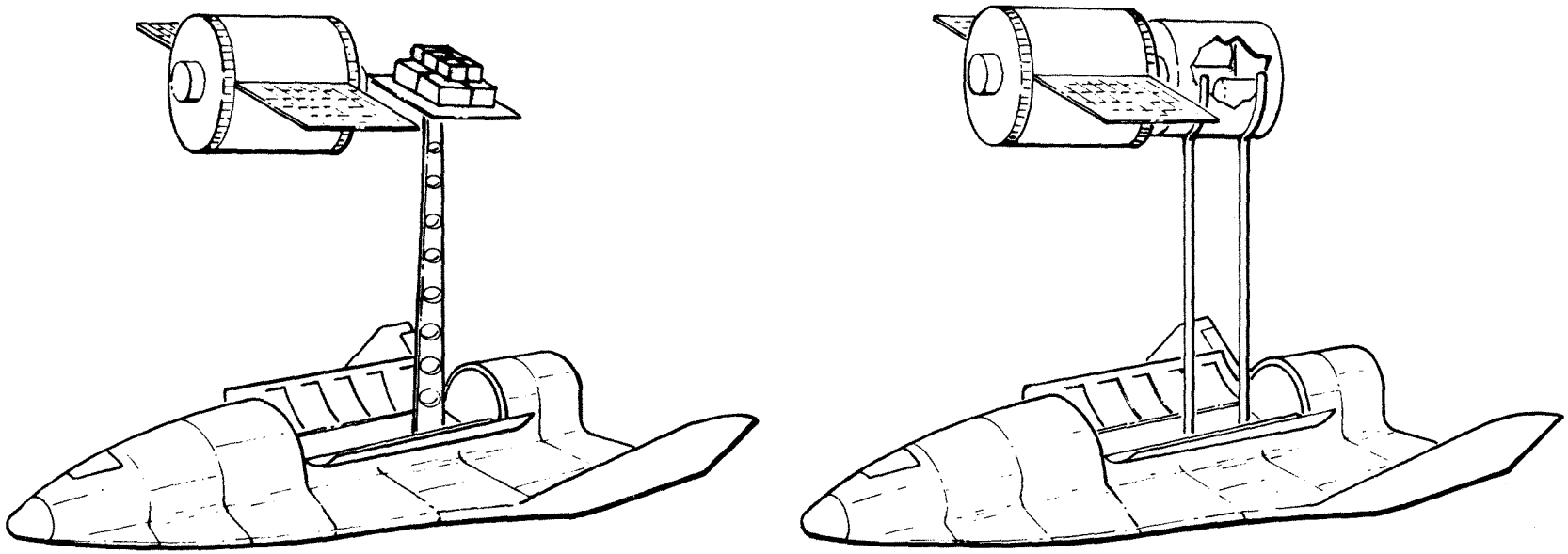

Figure 4. Two possible cargo accommodation and transfer modes.

11 000 pounds, depending on whether a pump-down cycle is used or makeup atmosphere is provided as part of the logistics payload. Delivery of a full-size pressurized module costs about 10 000 to 12 000 pounds for either the hard-docked or stationkeeping modes. Thus, as indicated earlier, noncargo weight penalties appear to be on the order of 20 to 25 percent, making this a key aspect of future analysis of methods to achieve effective use of the Shuttle.

If the pressurized mode with the compartment docked to the Station/Base is assumed, a number of cargo-handling considerations must be evaluated. Manual handling is limited by crew capabilities and time to small articles. Very limited NASA and DOD effort in zero-g cargo handling and transfer has been accomplished in the KC-135 aircraft simulation and in some underwater simulation. Guidelines indicated something less than a 24-inch cube for one man and a 20- by 30- by 40-inch object weighing no more than 250 pounds for two men. Based on these assumptions, it would take approximately 200 trips over an average round-trip distance of 60 feet to empty the 15- by 60-foot compartment loaded with 200-pound containers, or about four 8-hour shifts for two crewmen to handle the 40 000 pounds of cargo. One conclusion indicated by the extent of this activity is that the Shuttle should not remain on orbit awaiting cargo transfer both up and down; another is that mechanical aids are required.

Furthermore, one concept suggested for future study is to use a 15- by 30-foot or a 15- by 15-foot pressurized cargo/passenger module deployed from the Shuttle as a semipermanent warehouse (or "pantry") attached to the Station/Base, thereby eliminating a requirement to off-load cargo before the Shuttle can deorbit and return. In this mode of operation, the cargo is off-loaded as needed and the cargo/passenger module filled with return cargo as needed in preparation for a return flight. The operations profile would then amount to an exchange with the Shuttle of standardized up-and-down cargo modules on each logistics flight, allowing the Shuttle to return immediately to earth. The only anticipated need for on-orbit linger would then be facilitation of the crew overlap/exchange time.

This same concept of utilizing a modular approach was applied to each of the proposed missions as layouts of the typical payloads indicated that such an approach was technically feasible. In addition, the approach appears to offer the following advantages:

1. Minimize Space Shuttle ground turnaround time — The mission peculiar modules could be prepared in advance and loaded into the cargo bay with minimum interfacing with the orbiter vehicle.

2. Maximize the Space Shuttle performance — Mission peculiar provisions and equipment would not be incorporated into the orbiter and subsequently carried on missions not requiring them.

3. Minimize the interface problems — Clean interfaces, mostly attachments for structural support and/or deployment, could be defined between the orbiter and the various payloads.

These advantages thus indicate that a modular approach to payload handling could be very attractive to the Space Shuttle program.

C. Module Sizing Analysis

Analysis of the potential payloads has tentatively indicated that the Space Station crew-rotation and resupply missions would lend themselves well to a modularization approach. These two missions are discussed below. The satellite service and the experiment module missions are discussed in Section IV.

The requirements for the missions shown in the Traffic Model (Table 1) indicate the possible need for personnel in addition to the two-man orbiter crew. This potential need includes the rotation of the Space Station crew, the delivery of men to manned satellites, and the other special missions. Figure 5 (from Reference 1, Volume VIII) presents a breakdown of the possible personnel requirements for the various missions. This study [1] indicated that the two most-desirable personnel module sizes were those incorporating provisions for either 4 or 12 men. The 12-man module could handle the 10- and 6-man missions, and the 4-man module could cover the rest. Thus, according to this study, these two modules, along with the two-man crew, could handle 535 of the currently envisioned 568 missions.

D. Comparison of 4-Man Module and 6-Man Orbiter Cabin

According to the analysis reported in Reference 1, the 4-man personnel module could be used on 325 of the currently envisioned 568 missions. This 4-man module (compared with the 12-man module) could possibly introduce both a payload compartment volume reduction and weight reduction because of the decreased structure and subsystems requirements. An alternative to the 4-man module would be a 6-man orbiter cab. Schematic concepts of the various options are shown in Figure 6. This 6-man cabin

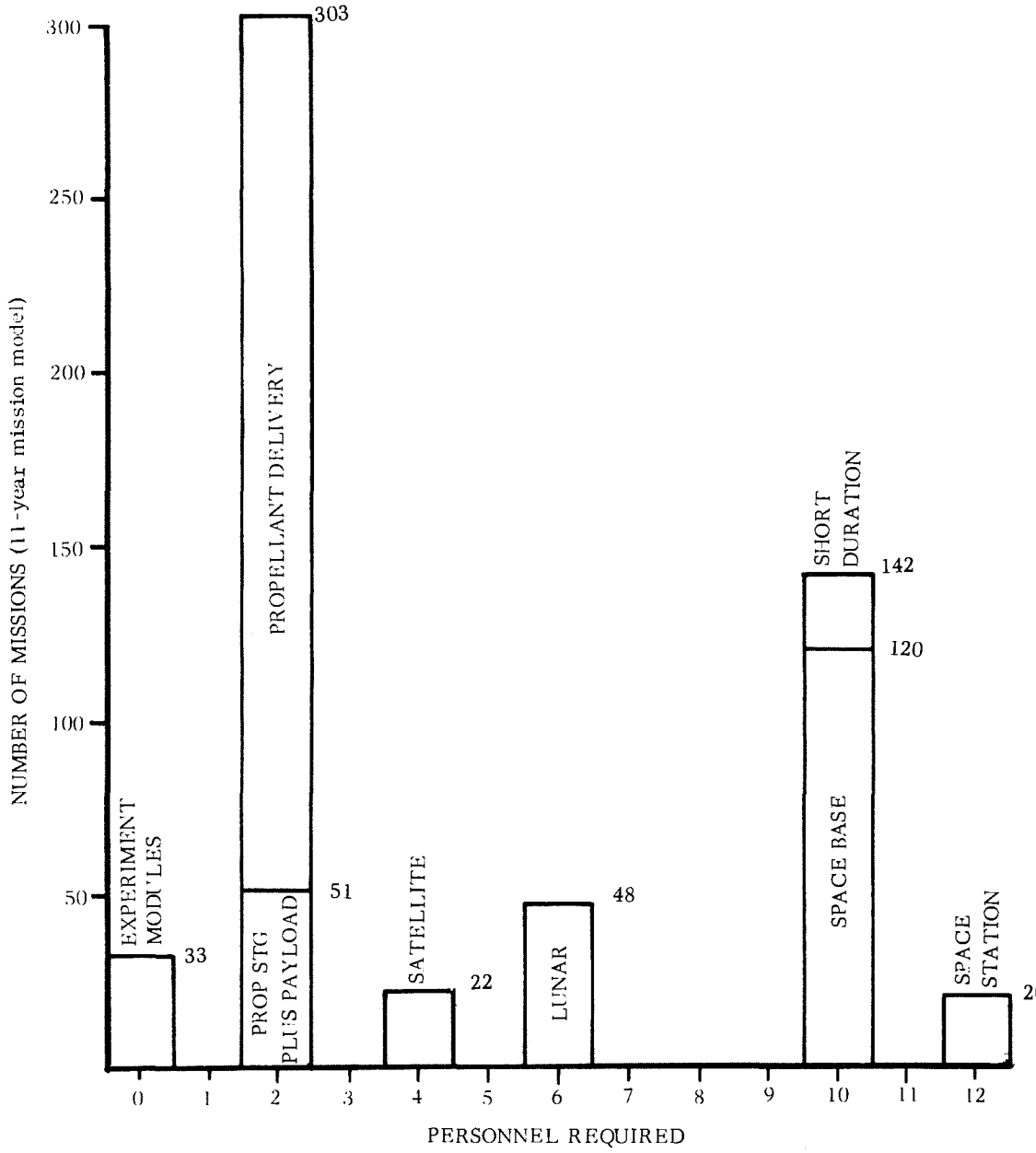

Figure 5. Personnel module size requirements [1].

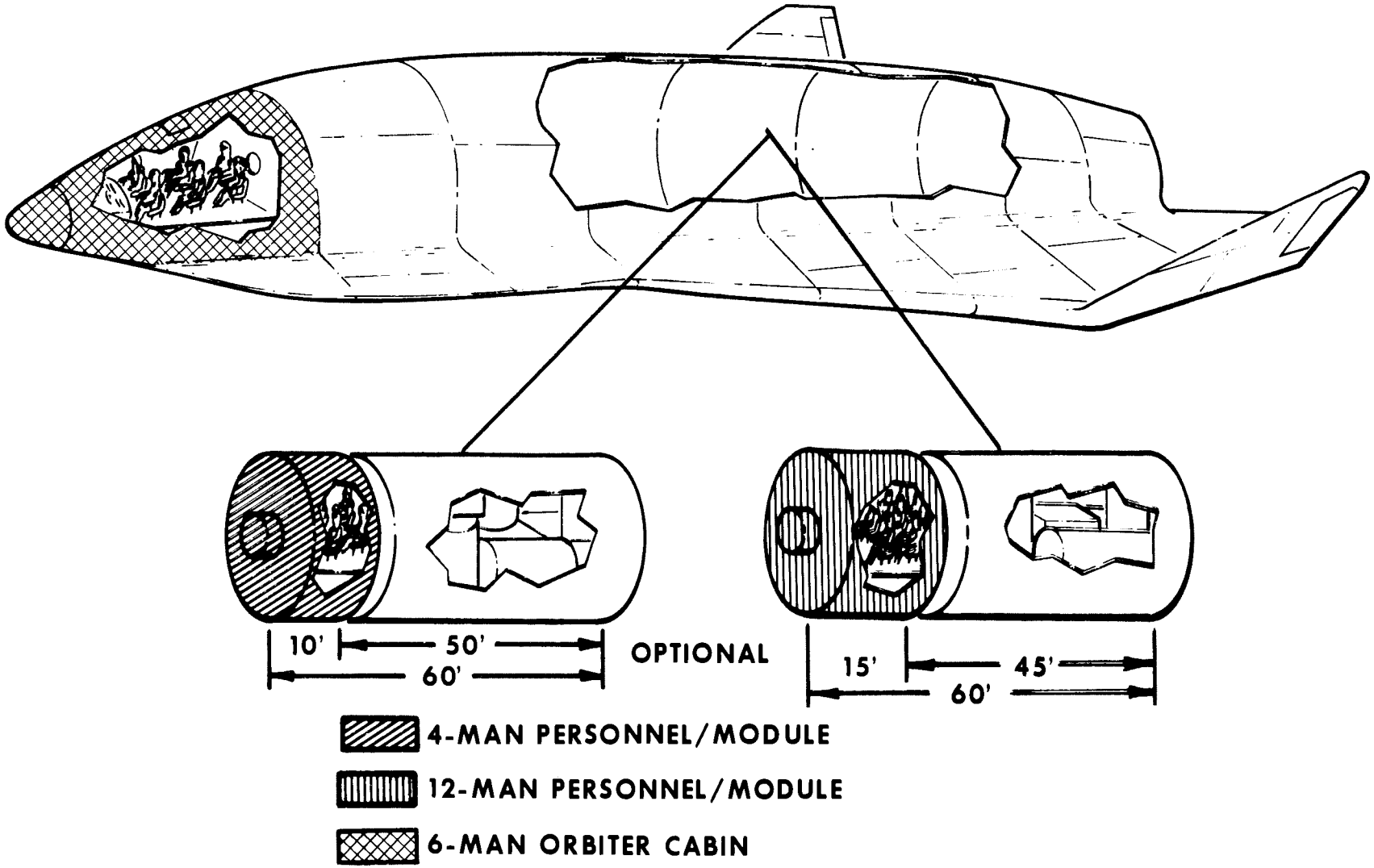

Figure 6. Schematic concepts of orbiter, 6-man cabin, 4-man personnel/module, and 12-man personnel/module.

could provide the necessary personnel requirements without reducing the payload volume and with a probable weight reduction in supporting subsystems. An increase in size of orbiter subsystems such as EPS, LSS, and ECS would replace the duplication of such systems when a separate module is used.

Use of the 4-man module in the cargo bay has some advantages, such as direct visibility, via a viewing point in the module walls for orbital operations. The 4-man module would be used for personnel responsible for placing ahd retrieving satellites, delivering propellant, and delivering propulsion stages and payloads. If these operations were to be performed from the orbiter cab, indirect viewing such as TV would have to be provided or an aft control station would be required. The module or aft control station would require a computer for checkout functions or use of the orbiter avionics on a time-share basis.

If a 6-man (including crew) cabin were designed into the orbiter, it could also be used for those missions previously requiring a 12-man module. The result would be that the previous 12-man module could be resized for 8 men and would thus be 10 feet in length. It is estimated that such a module would weigh about 7200 pounds. When used as a cargo module, it would weigh about 5000 pounds. The orbiter 6-man cab capability would now be able to be used for 94 percent of the missions. The only exception is the experiment module delivery missions that will be discussed below.

These Space Shuttle studies have resulted in an indication that the "pantry" approach to cargo/personnel handling may possibly be the "best way to go." This approach could provide a very flexible Space Shuttle with the capability to handle 12 000 pounds and 12 men (up) and 7000 pounds and 12 men (down) for resupply of the Space Station on a quarterly basis, and the ability to handle a lunar mission requiring 6 men and 20 000 pounds every 2 months.

The ground rules used (some changed between the start of the study contracts and the completion of the NASA's effort) for this analysis were:

a. The Shuttle will not hard dock with the Space Station or Space Base. The general docking operation is discussed later in this report.

b. All docking ports, transfer tunnels, whatever will have a clear circular area, 5 feet in diameter.

c. All parts of the Shuttle system will have maximum reusability.

d. Airline-type operations will be employed with respect to ground handling, cargo restrictions, etc.

e. Intact mission abort capability will be designed in.

f. Personnel transfer will be in a shirtsleeve environment.

It was anticipated that the most-likely mode of operation would be to carry 6 to 12 passengers on a mission, attach the "pantry" module to the Station, retrieve an empty module with its return to ground cargo and personnel and return to earth surface — probably a 2-day mission for the Shuttle. Salient features of the contemplated module are:

a. Selfsustaining. The interfaces with the Shuttle are limited to the needed physical attachments to take the launch, ascent and descent loads, and the attachments (if any) of the deployment/retraction mechanism.

b. Seats only, no sleeping facilities.

c. Five-foot docking port, without airlock provisions.

d. Mixed-gas atmosphere of 10 psi (or 14.7 psia — same as Space Station).

e. EC/LSS systems sized for 12 men for 7 days — based on the following consumption rates:

Food	2.0 pounds/man-day
Metabolic oxygen	1.68 pounds/man-day
Water (drinking & food prep.)	6.99 pounds/man-day
Water (personal sanitation)	2.3 pounds/man-day
Atmosphere leakage allowance	10 percent (vol.) per day

On this basis, both LMSC and GDC investigated the detailed cargo-handling provisions of a pressurized cargo/personnel module (pantry). The LMSC module weight estimate was about 11 000 pounds; the GDC estimate was 10 417 pounds (this may need to be increased to provide meteorite protection if the "pantry" approach is used).

The cargo-handling problem, as currently foreseen, is to achieve an internal module-accommodation arrangement that permits ease of access

and avoids clogging of the working area by bulky items. When loading the cargo (either on the ground or in orbit), the back sides of packages are against the walls and are generally inaccessible; therefore, the cargo would probably be secured from the front. One possible cargo-handling system envisioned as an integral part of the pressurized module is shown in Figures 7 and 8.

This cargo-handling system would thus provide restraint of the cargo containers at all times during the unloading operations; any shape of container could be handled. The cargo module would have a center access tunnel, and the containers would be mounted around this center tunnel, attached to the outer shell of the cargo module. The cargo-handling system would consist of a pallet to which the containers would be secured for unloading. The pallet would slide along on two sets of parallel end tracks which, mounted in a circular end ring, could rotate around within the end ring; therefore, the rails and the pallet would be raised and lowered by an electrically driven, closed-loop cable system at each of the end tracks. An electric motor-driven roller system at one end ring would provide the power to rotate the platform within the module.

Containers could vary in shape and size, but all containers would have to pass through a common hatch (5 feet in diameter at present). The containers may be 3 feet deep and may vary from 5 to 10 feet or more in length, depending on storage room volume and shape at the Station/Base. Their weights may range up to 2000 pounds. The container structure would have to take the launch loads, typically up to 3 g's vertical and up to 2 g's transverse. The cross-sectional shapes of containers may be circular, rectangular, or trapezoidal, and several shapes may be used within one module.

The emphasis in the studies was on a minimum of module/orbiter interfaces. This has been achieved and a mechanical-only interface concept is recommended. This concept would allow the orbiter to be sized to firm requirements and the payloads to be sized and designed for their own unique mission requirements as they are developed. This restriction to a mechanical interface is also the most desirable when considering various alternate personnel and cargo-transfer concepts.

E. Integral Propellant/Tank Transfer Operations

The delivery of propellant tanks to an OPSF is presently seen as very similar to the operations associated with the delivery of cargo/personnel modules to the Space Station. The potential problems, as currently foreseen, are discussed below.

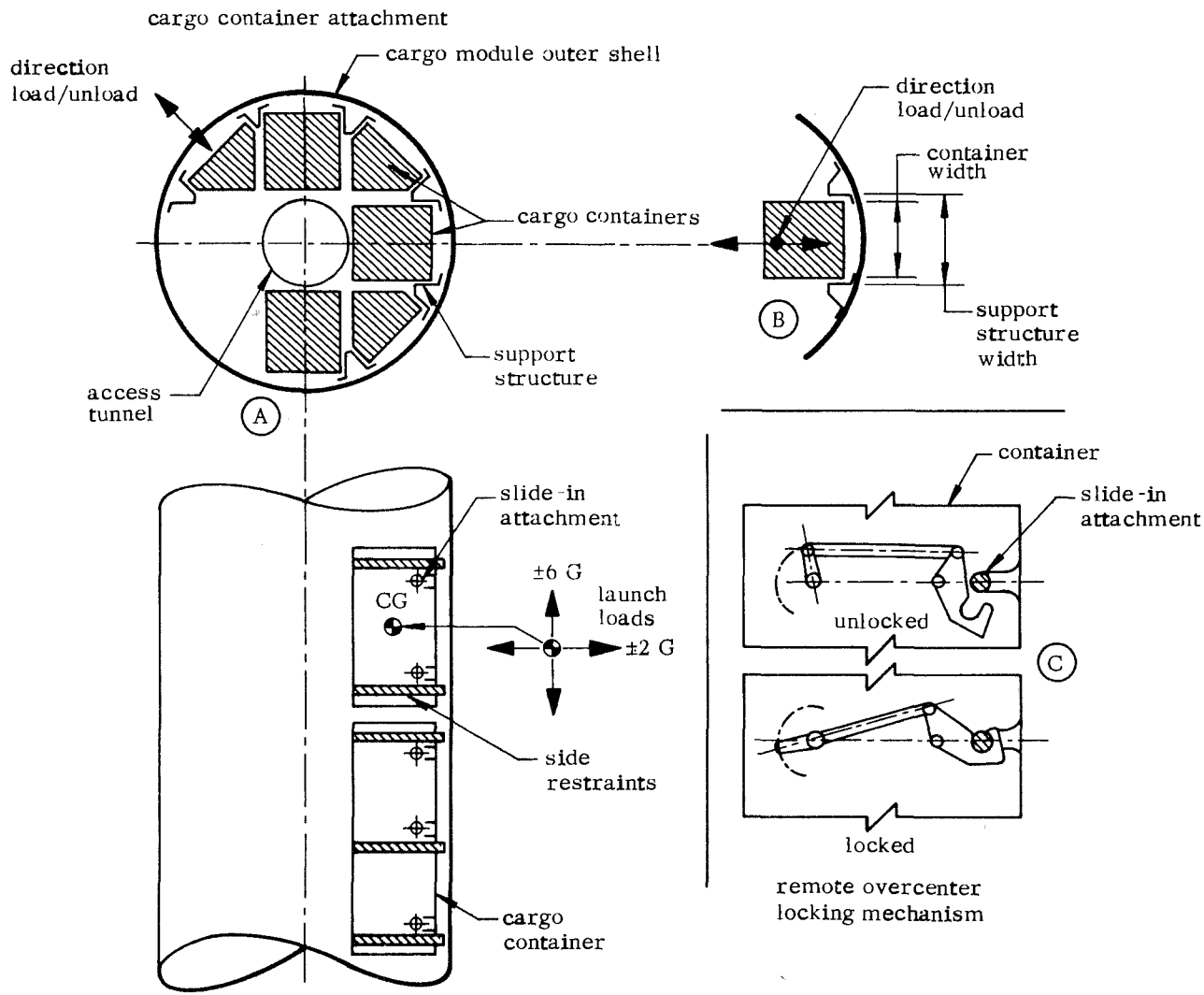

Figure 7. Typical methods of cargo container attachment [2].

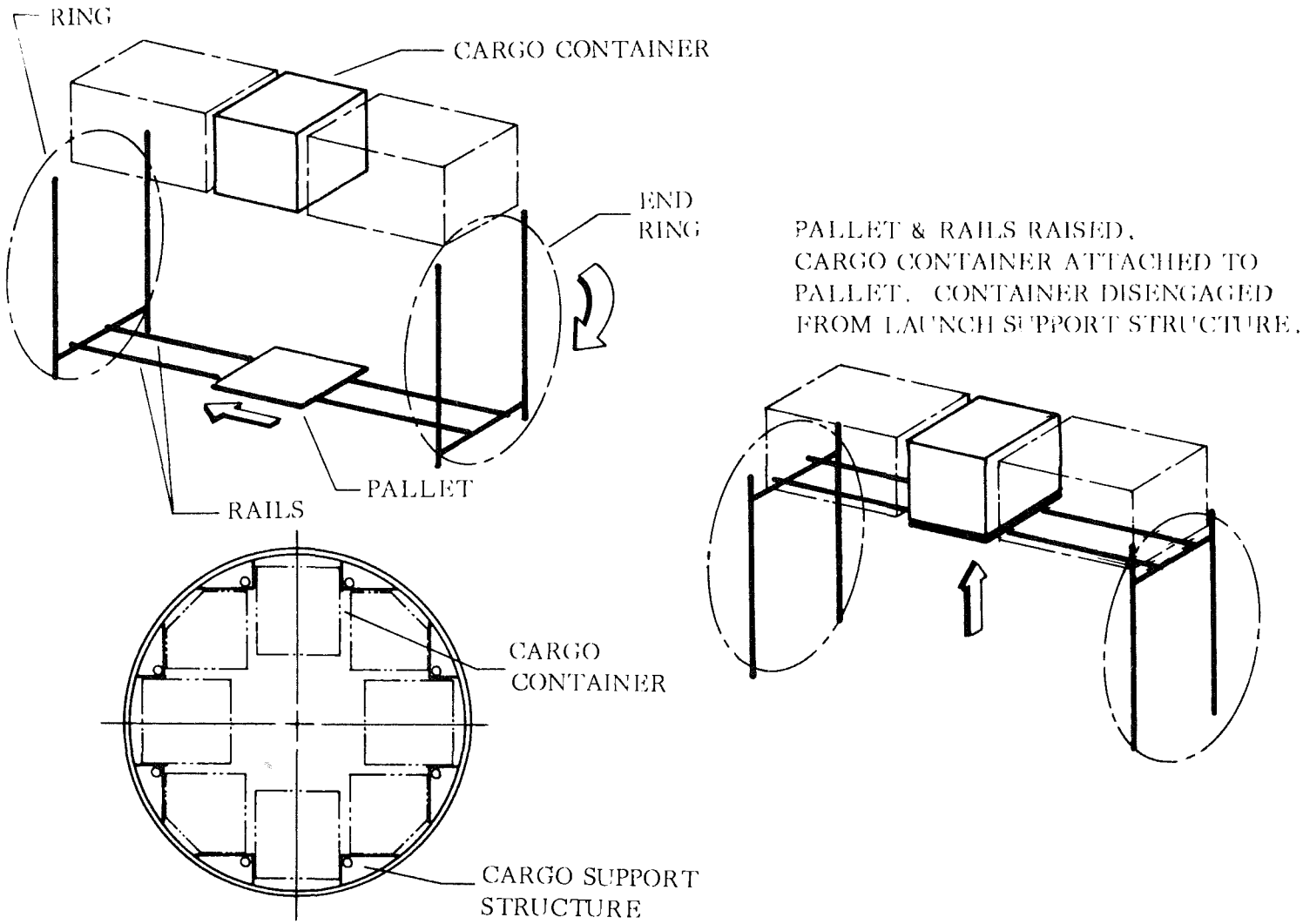

Figure 8. Cargo unloading sequence (removal of cargo mounted above rails)[2].

Quick connects/disconnects for the attachment of propellant tanks containing about 43 000 pounds of LH_2 are believed to be the major problem associated with the integral tank-transfer concepts. Various tank-farm concepts have been studied recently and some of these concepts are shown in Figures 1 and 2. One possible tank-transfer methodology is shown in Figure 3.

Most of the applicable pump work to date has been done in connection with systems used to feed propellents to vehicle engines, including chilldown and recirculation pumps. Some consideration should possibly be given to the use of such pumps presently on board the basic OPSF structure rather than on each separate tank unit.

One advantage of pump application for fuel transfer, instead of their use as engine feed pumps, is that the pressure-rise requirements will, in general, be significantly lower. This situation will allow consideration of axial flow and all-inducer-type pumps in place of the centrifugal-type pumps used with present-day vehicles. Operation with low inlet pressures is important to minimize pressurant requirements and axial flow, or all-inducer pumps should lend themselves well to this type of operation.

The use of gas or vapor to expel propellant from storage tanks is a well-established technology and these methods may be applicable to the transfer of fluids in space under an artificial-g field; however, analytical studies have shown that there may be an increased potential of gas blow-through during low-g draining operations.

The OPSF interface is currently defined as the piping, structural hardware and control subsystems connecting the 15- by 60-foot tank to the core and pumping section through which the cryogenic propellant is transferred to the Nuclear Shuttle or other vehicles. Basic problems with the rigid, quick disconnect system are, in general, the same as ground transfer, except that hardware weights, reliability, and remote operation are believed to be more critical. The OPSF core/tank interface needs reliable leak-tight coupling connections and shutoff valves. In addition, since cryogenic fluids are involved, chilldown of the core pumps, piping, and insulation in each major transfer operation may require special venting systems.

Tanker studies to date have tentatively indicated that a rigid support structural concept would be best for the following reasons:

- Feasibility of automatic hookup is increased.

- Attitude control sequencing is minimized.

- Little or no structural stress is placed on propellant lines.

- Ability to use acceleration-settling methods (either rotational or linear) is improved.

It is currently envisioned that the mechanics of coupling would be similar to that used for aircraft inflight refueling. Since there will be no aerodynamic perturbations, the boom extension and guidance could possibly be both similar and simpler. The design and operation of the OPSF tanks and core will probably encounter venting/pressure buildup problems. Therefore, orbital experiments to define the behavior of cryogens are strongly recommended. One method of placing a propellant tank on the OPSF is shown in Figure 9. This, of course, is a major area of Shuttle operations that should be exposed to additional tradeoff studies before a final selection of operational methods is made.

F. General Docking Considerations

1. General Control Considerations. The problems of docking the Space Shuttle with the proposed Space Station, the OPSF, the Nuclear Shuttle, and the other proposed units of the ISP hardware are currently considered of major import, maybe even of overriding importance with respect to the operational aspects of an Independent Space Program.

The principal factors to be considered in docking operations are restrictions on the orientation and/or maneuverability of the Space Station and the possibility of both manual and automatic modes of operation — at the option of the flight crew. In considering what modes of operation are desired, both hard-docking (the Shuttle direct to the Station) and stationkeeping modes should be included. At least during the initial phases of the ISP, the Shuttle, as it is now foreseen, will be substantially larger than the Space Station and the potential physical interference possibilities with antennas and other devices deployed from the Station may make the close approach of the Shuttle to the Station a potential hazard to this equipment, the Station, and/or the Shuttle. However, these difficulties should not be considered insurmountable.

In general, the maneuvering required of the Shuttle in a direct docking operation or the attachment of modules to the Space Station will require very careful, precise control; and a collision in any respect will involve potentially

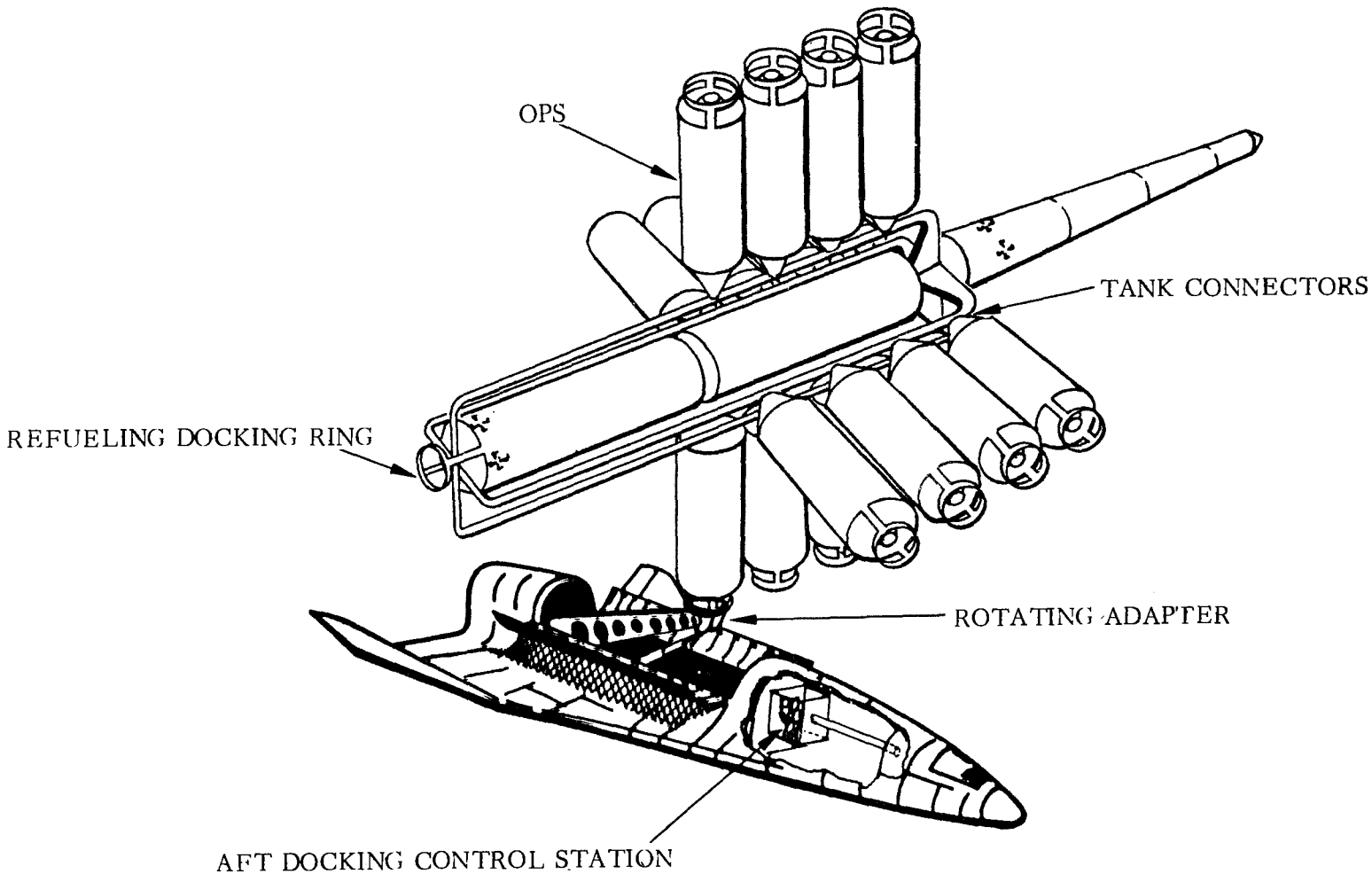

Figure 9. Space Shuttle propellant tank transfer concept [1].

hazardous damage to the Shuttle's heat shield, engines, and control surfaces and/or damage to the Space Station's structure, communications, attitude control systems, etc. Fully automatic docking systems have not yet been developed, and the requirements for precision laser or radar systems for sensing and complex vehicle onboard guidance and control and dynamics computations have not been satisfied. Manual systems based on the piloting skills of the astronauts have been well demonstrated on the Gemini and Apollo vehicles; however, these vehicles were much smaller than the contemplated Space Shuttles and Space Stations. With the much-larger masses, the inertial and attitude sensing skills of flight crew members may no longer be adequate, and the larger physical offsets between eyeball, docking ports, and vehicle centers of gravity are expected to generate complex motions (real or apparent) during the fine maneuvers required. In addition, the approach and docking of the vehicles will probably be limited by the visibility/illumination constraints and the sun angles.

Use of manual control with the proposed large logistics vehicles is expected to involve or evoke apparent control-axes cross-couplings during docking. The resultant control disharmonies would produce the potential for greater propellant consumption, increased time requirements, and larger error for docking maneuvers than flight experience to date would seem to indicate. These potential effects would be intensified whenever the docking-capture mechanism is out of the field of view, and the pilot is required to use a docking target located at a different position than the primary docking contact point.

Figure 10 shows the control geometry system used by Lockheed [2] in their study of this problem. This reference system has orthogonal rotational axes intersecting at a common center of rotation, which coincides with the vehicle center of gravity, parallel motion translation along these same axes, and thrust aligned through the center of gravity. The characteristics of current manned spacecraft and logistics vehicles as presently envisioned were approximated. In Gemini and Apollo, the docking mechanism was centered and the eyepoint would almost coincide with the rotational center. The docking line of sight has been along a control axis, normally roll.

As vehicles become larger (i.e., Space Shuttle and Space Station), the systems design influences will probably generate wide separations between the axis and the observation points. This, in turn, may possibly lead to manual-control disharmonies. As an example, when the eyepoint is on the roll axis but not at the center of rotation, pitch or yaw motions appear to have heave or sway components. The magnitude of these components

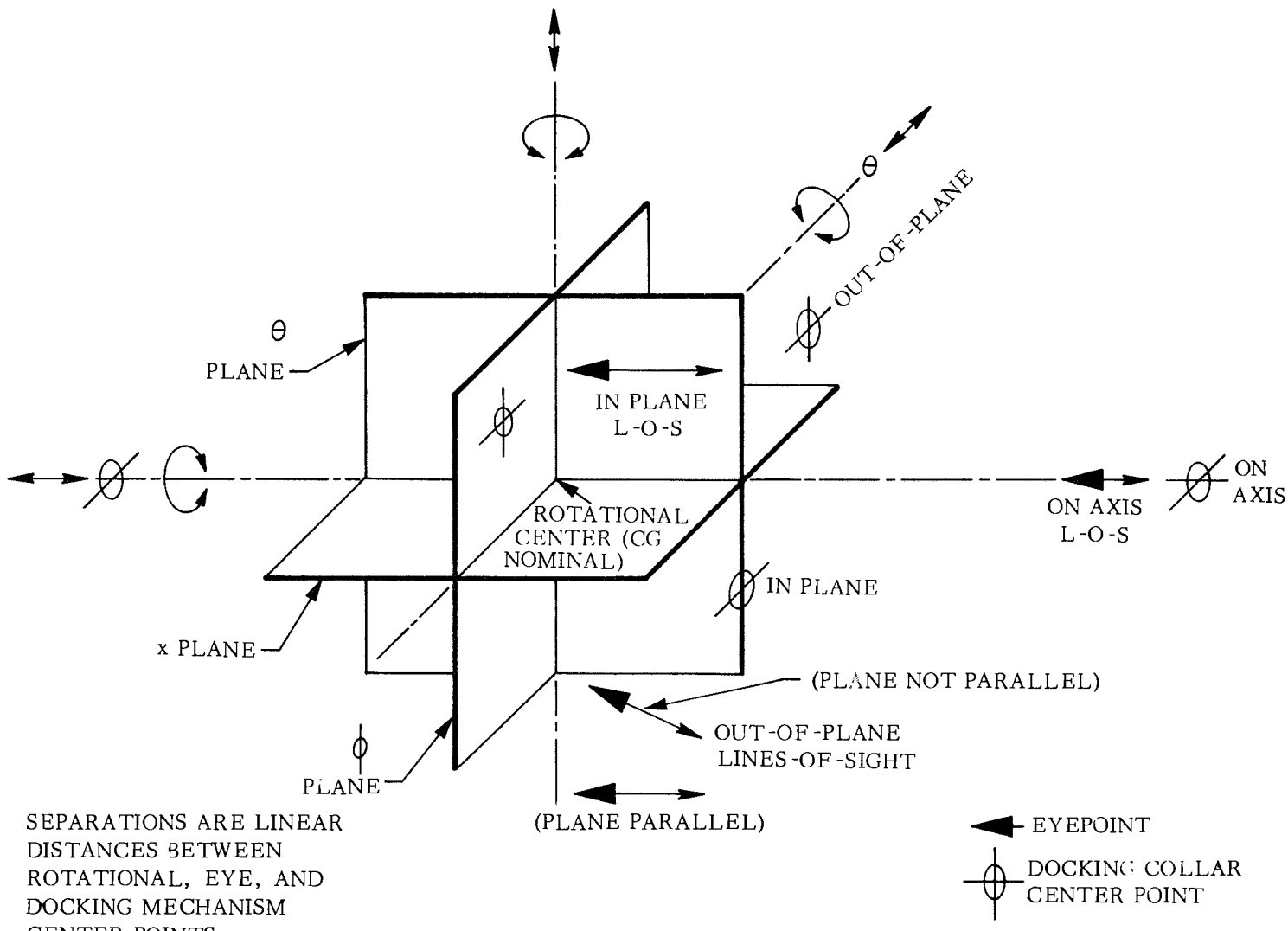

Figure 10. Docking control geometry [2].

increases with eye-point separation from the center of rotation. Separation of the docking mechanism center from the roll axis generates apparent pitch and yaw rotational changes at the docking contact point when a roll maneuver is executed. Other considerations such as thrust misalignments and control sensitivities may also interact and further affect these disharmonies.

It is currently anticipated that soft-docking operations would encounter similar control problem situations.

2. Visibility and Illumination. In addition to the Shuttle maneuver factors, consideration should be given to visibility at time of docking. This visibility will depend on three factors: (1) the ambient illumination of the objects within the field of view will be determined by the geometric relationships existing among the Shuttle, the target vehicle, the sun, and the earth; (2) contrast within the field of view, especially glare and shadow, will be determined by the shapes and surface conditions of the two vehicles; and (3) the window position and field of view, both size and shape, will interact with the first two factors to determine the occurrence of sun shafting through the viewports and the scene veiling effects caused by scatter within the window itself. It is anticipated that difficulties with visibility will tend to increase propellant consumption, error possibility, and safety hazards during the docking operations. Considerations for visibility will probably constrain the location and orientation of the docking ports, the design of capture/secure mechanisms, and the target design associated with each docking location.

During the Integral Launch and Reentry Vehicle (ILRV) study, Lockheed made an analysis of docking with a Space Station which was modeled as a cylinder using solar arrays for the primary power supply. This configuration (Fig. 11) was equipped with side-docking ports which were assumed to be oriented such that the docking maneuver centerline was perpendicular to the Space Station centerline. The Station was oriented with the solar arrays perpendicular to the sun's rays and with the roll axis parallel to the sun's rays.

The logistics vehicle model used in this analysis was a Space Shuttle docking in a nose-in attitude. Sunlight incidence angles between 60 and 140 degrees were assumed to be acceptable (Fig. 12). For sun angles of less than 60 degrees, sun shafting through the docking viewport or sun incidence causing veiling (light scatter in the viewport optics) are distinct possibilities. For sun angles of greater than 140 degrees, the Shuttle's own shadow may cause obscuring of the Space Station docking port and target. It was also

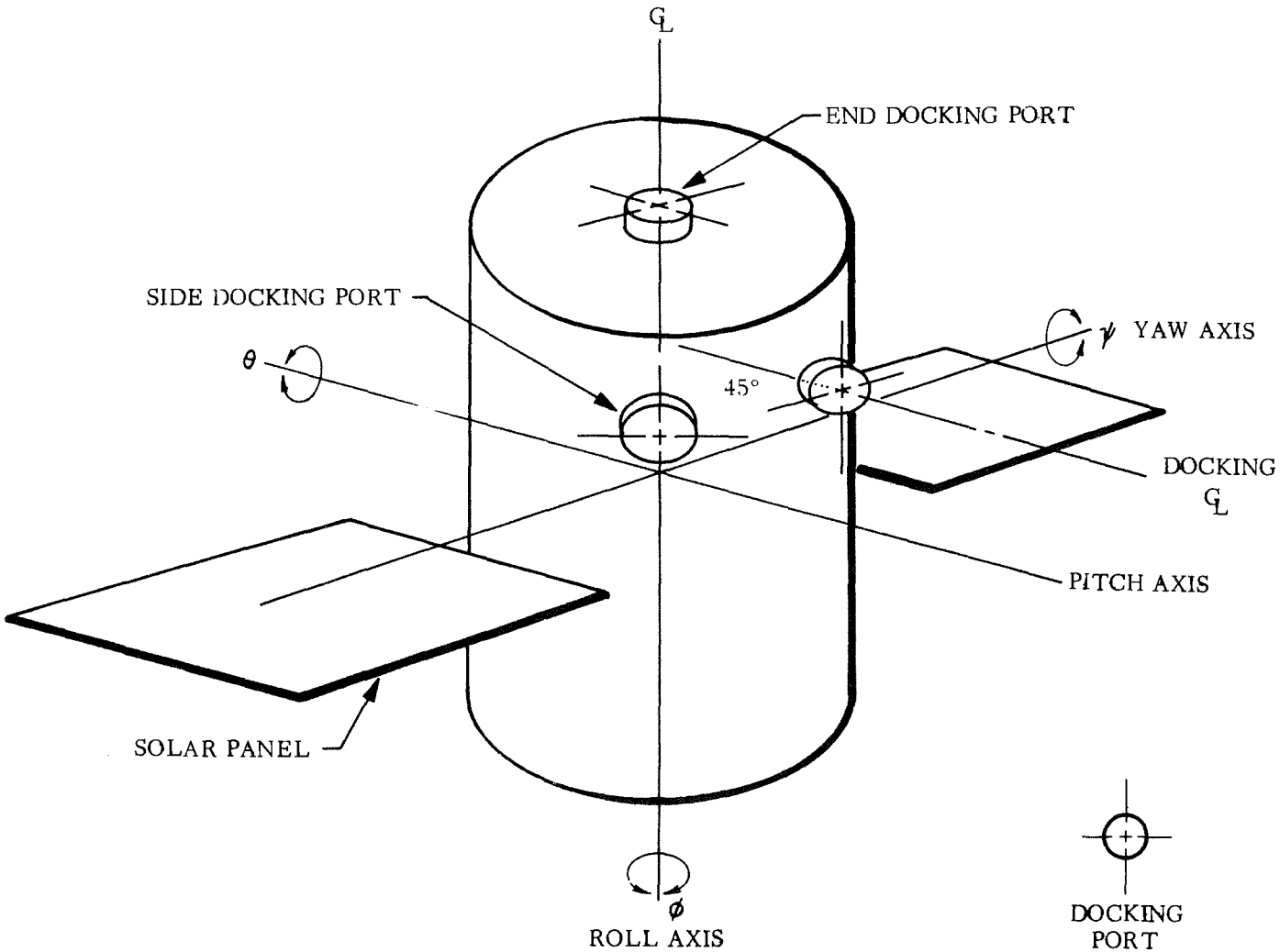

Figure 11. Space Station model [2].

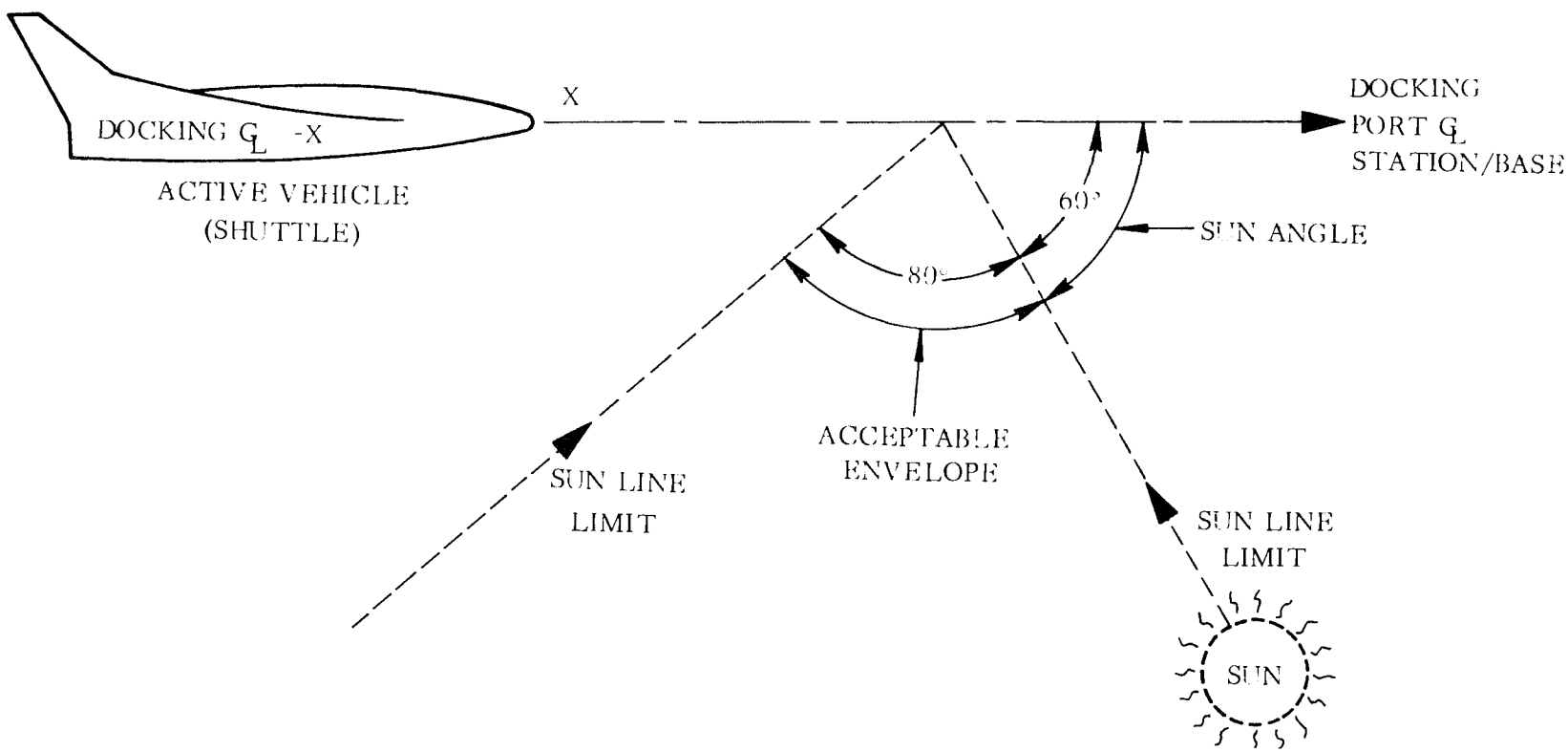

Figure 12. Docking sun angle [2].

assumed that the sun-angle constraints were the same for all vehicle roll positions with respect to the sunline. This constant sun-angle constraint for all vehicle roll angles may be inappropriate for the many complex Shuttle shapes being investigated. Additional study is probably warranted.

The LMSC analysis also made the following assumptions:

- All docking would be performed in daylight, in zero-g flight modes, in a 270-nautical-mile orbit with a 55-degree inclination, and with no reorientation of the Space Station to accommodate the docking maneuvers.

- All external Space Station surfaces were highly reflective (greater than 50 percent) and lambertian diffuse, except for the solar arrays with their solar cells' 20-percent reflective and highly specular mounts of matte-finished aluminum with cell-to-mount packing factors of 0.80 to 0.85.

- Sky or dark earth served as background during the docking maneuver, with the port illuminated (in order of preference) by the sun and earth reflection, by the sun only, or by earth reflection only.

Flat Space Station surfaces are preferable to curved surfaces in the active vehicle field of view during docking maneuvers — a condition which could probably be very difficult to attain in most cases.

When the Space Shuttle is operated under the preceding assumptions, it presents the simplest case for analysis as a constant attitude with respect to the sunline is maintained at all times. All cylinder-side docking ports are acceptable from a sunline standpoint as the sun angle to the Shuttle is always 90 degrees.

Operating under the assumption that all docking is performed in daylight, all dark-end docking operations are unacceptable as the docking port is not illuminated by the sun or earth and the Shuttle crew is looking directly into the sun. The sun-end port, with the docking approach parallel to the Station centerlines, is unacceptable because the sun angle is greater than 140 degrees and the docking port and target will probably fall in the Shuttle's own shadow area. In addition, this approach is close to or in the glare envelope resulting from the highly specular solar-array cells since the solar-array plane is nominally perpendicular to the sunline. However, sun-end approaches offset 45 degrees from the Space Station centerline result in a sun angle of 135 degrees and may be acceptable, providing this pattern is outside of the solar-array glare envelope.

Both direct-sun and earth-albedo illumination of the Space Station docking port and target are desirable. Earth-albedo considerations alone provide no obvious criteria for the location of the docking port and its target. The earth-side docking maneuver approaches provide both the desirable dark-sky background and the most-nearly optimum illumination conditions.

3. Docking/Cargo-Transfer Considerations. In considering the docking/cargo-transfer operations there were five major problem areas concerning payload transfer which appeared to merit investigation:

- How is the payload to be extracted from the orbiter vehicle?

- How is the payload to be transferred from the orbiter to the Space Station?

- How is the payload to be docked with the Space Station or other hardware unit?

- How is the payload transferred back to the orbiter from the Space Station?

- How is the payload returned to the cargo bay of the orbiter vehicle?

In addition, there are two other questions which are related to these five and which concentrate on the crew and passengers:

- Is it desirable to have an access tunnel connecting the crew cabin and payload bay (cargo hold)?

- Is it necessary or desirable to have a quick-egress tunnel for the passengers from the cargo bay to the outside?

The above seven questions were analyzed and are discussed in the following paragraphs.

a. On-Orbit Payload Extraction. The removal of the payload from the Shuttle's cargo bay can be accomplished with one of four general modes:

- In an orbiter-initiated and controlled mode.

- In a payload-initiated and controlled mode.

- In a Space Station-initiated and controlled mode.

- In a mode of operation initiated and controlled by a maneuverable third vehicle; i.e., by the Space Tug.

In addition, any one of these four modes could possibly employ any of the following specific methods:

- Translation devices such as: (1) telescopic pushers, (2) worm gear pushers, (3) loaded springs, (4) scissor extenders, (5) cable reel-in devices, and (6) pneumatic devices.

- A swing-out docking rig.

- Payload attached to the cargo bay door that swings it out during opening.

- Space Station removes payload using winches, booms, or manipulator arms.

- Space Tug docks with payload still in cargo bay or partially deployed by translational devices such that the payload is clear of the cargo bay doors.

- Payload removes itself through use of self-contained propulsion units.

These representative payload-extraction concepts are shown in Figure 13. An assessment of the advantages and disadvantages of each mode of operation is presented in Table 4.

Based on the assessment shown in Table 4, the use of two-way translational devices is selected as the recommended mode for on-orbit payload extraction. The other methods tend to exhibit major limitations on possible alternate missions and/or serious dynamic problems.

b. On-Orbit Payload Transfer. Once extracted from the cargo bay of the Shuttle's orbiter vehicle, the payload is ready for transfer to the Space Station or another operational unit, such as the propellant facility or Nuclear Shuttle. Four of the apparently more-promising methods available for this task are the following:

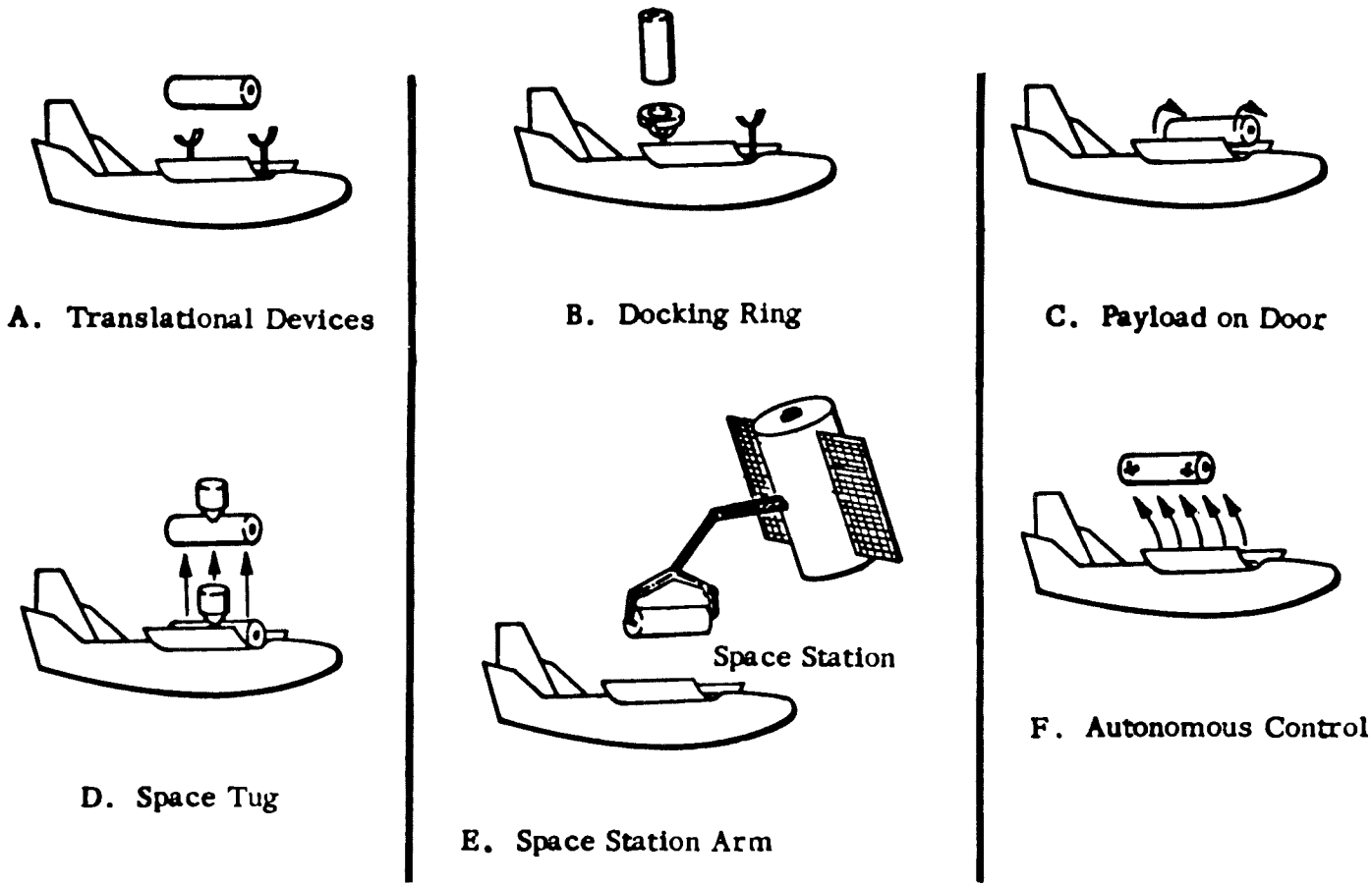

Figure 13. On-orbit payload-extraction concepts [4].

TABLE 4. PAYLOAD-EXTRACTING CONCEPT ASSESSMENT

METHOD	ADVANTAGES	DISADVANTAGES
1. Translational Devices	(a) For 2-way push and hold devices -- can be used for alternate missions.	(a) Weight charged against payload. (b) Some are one-way only devices. (c) Mechanisms require volume and may interface with system placement.
2. Swing-Out Docking Ring	(a) Can be used for alternate missions.	(a) Weight charged against payload. (b) Mechanism requires volume and may interface with system placement. (c) Translate and swing mechanism may be exceedingly large.
3. Swing-Out On Door	(a) Can be used for alternate missions. (b) Only one operation.	(a) Mechanism requires volume and may interface with system placement. (b) Dynamic forces on door and door hinges may be excessive.
4. Space Tug	(a) Can be used for some alternate missions. (b) No internal mechanisms required.	(a) Requires third vehicle. (b) Requires docking while payload is still in payload bay. (c) Possible problem with door interference. (d) Alternate missions requiring removal of payload canister (away from station) cannot be performed.
5. Space Station Arm/Boom	(a) No internal mechanisms required.	(a) Difficult payload attachment. (b) Dynamic forces on Space Station may be excessive. (c) Lift out stability hard to control. (d) Alternate missions requiring removal of payload canister (away from station) cannot be performed.
6. Payload Removes Self	(a) Can be used for alternate missions.	(a) Weight charged against payload. (b) Requires additional hardware on payload canister. (c) Likely plume impingement on orbiter vehicle. (d) Return to orbiter payload bay is difficult.

- Extension and attachment of control/reel-in arms by the Space Station (or other mission element) in conjunction with the Shuttle's translational devices.

- Pushing or pulling by the Space Tug.

- Use of a self-contained propulsion system.

- The Space Station moves to the payload.

Each of these potential methods is illustrated in Figure 14. An assessment of the advantages and disadvantages of each method is presented in Table 5. As a result of this assessment, the choice narrows down to two; namely, the two-step boom control by the Space Station and Space Shuttle and the use of the Space Tug. The self-propelled concept is third and should be considered if the boom control proves to be impractical. Further study is considered desirable before a final selection is made. However, for the purpose of this analysis, the two-step extension by the Shuttle and boom control by the Space Station was tentatively selected as the preferred mode of transfer/docking operation. An illustration of this method is shown in Figure 15.

The use of the Space Tug, as envisioned in the McDonnell Douglas ILRV study [4], is shown in Figure 16. It should be noted that the payload is translated out of the Shuttle's cargo bay to a point clear of the doors before the Space Tug docks to it. This is accomplished by a two-way translational device similar to that proposed earlier for use with the two-step transfer that did not use the Tug.

c. Payload Docking Concepts and Analysis. There are many concepts whereby the Shuttle's payload may be attached (docked) to the Space Station. Six of these possible docking configurations are listed below and are illustrated in Figure 17.

1. Payload end to Station end.

2. Payload end to Station side.

3. Payload side to Station side.

4. Payload side to Station end.

5. Payload taken in through Station end.

6. Payload taken in through Station side.

TABLE 5. ON-ORBIT PAYLOAD TRANSFER ASSESSMENT

METHOD	ADVANTAGES	DISADVANTAGES
• Autonomous Control	• Good visibility for Station docking. • Simple system. • Adaptable to different docking configurations.	• Maneuvering system weight charged against payload.
• Use of Space Tug (Pushing)	• Docking mechanisms only additional hardware required. • Simple system if Space Tug already existing. • Adaptable to different docking configurations.	• Requires use of third vehicle. • Poor visibility for docking to Space Station.
• Use of Space Tug (Pulling)	• Docking mechanisms only additional hardware required. • Simple system if Space Tug already existing. • Good visibility for Station docking.	• Requires use of third vehicle. • Limited docking configurations. • Requires separate Space Tug for each payload canister. • Space Tug must have go-through pressurized tunnel.
• Space Station Cable Arm/Boom Withdrawal	• Good visibility for payload attachment to Station. • Very little additional hardware required on payload.	• Introduces dynamic forces on Space Station. • Orientation of payload may be difficult to control.
• Space Station Comes to Payload	• Simple system. • Good visibility for Station-to-payload docking. • Docking mechanisms only additional hardware required.	• Maneuvering propellant requirement excessive, particularly as Station buildup continues.

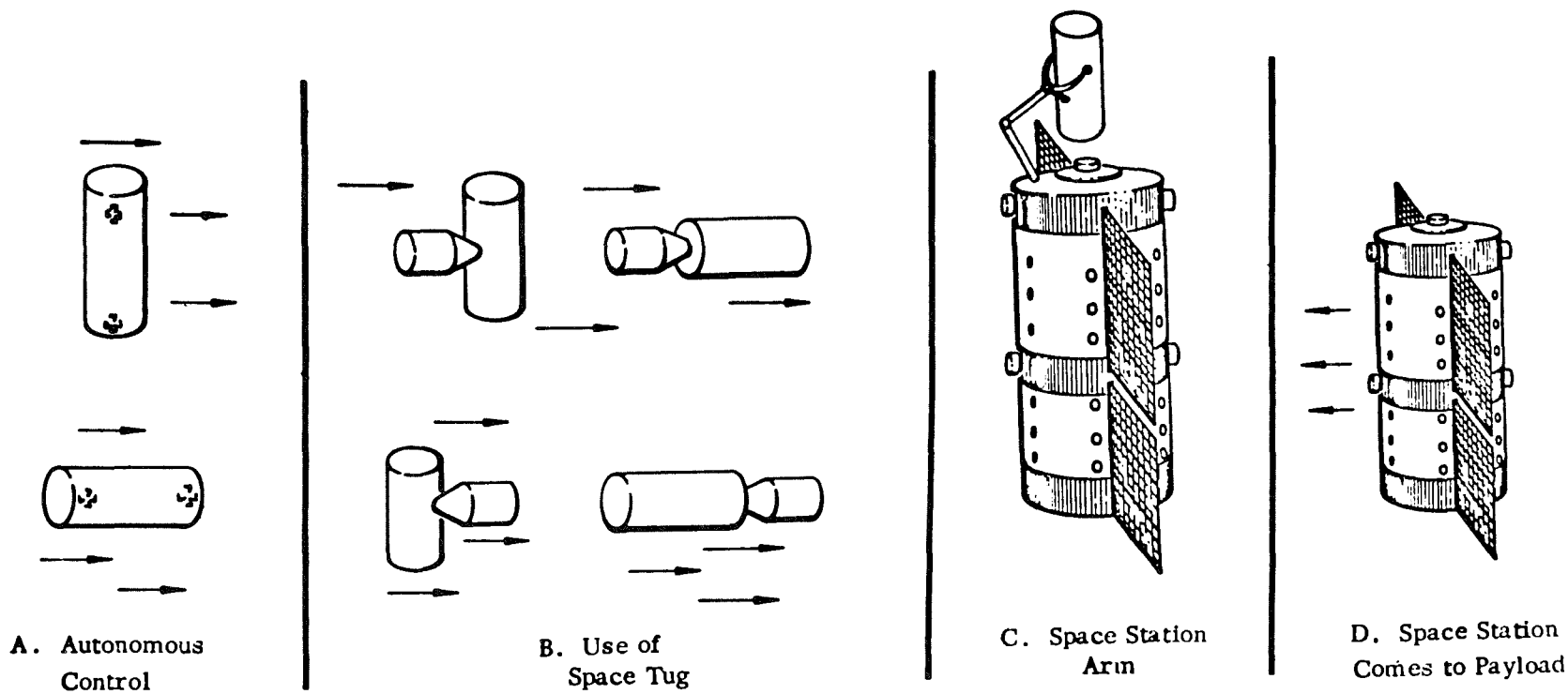

Figure 14. Methods of on-orbit payload transfer.

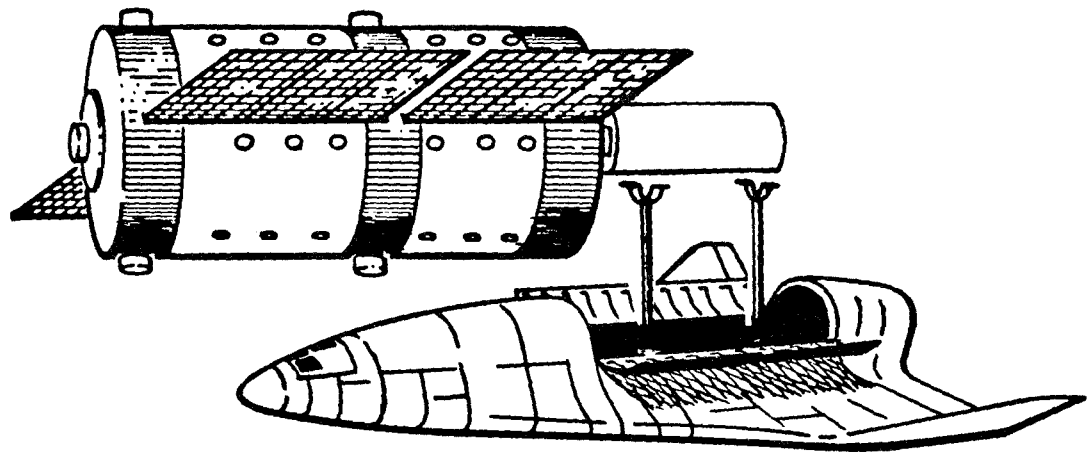

Figure 15. Cargo/personnel module delivery and transfer.

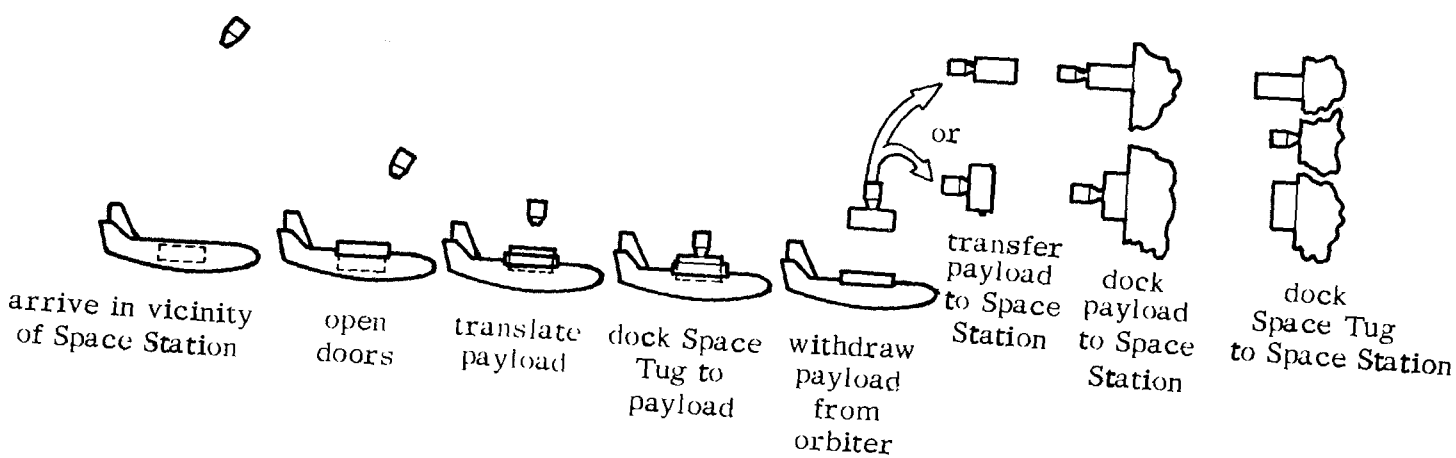

Figure 16. Payload transfer sequence with Space Tug [4].

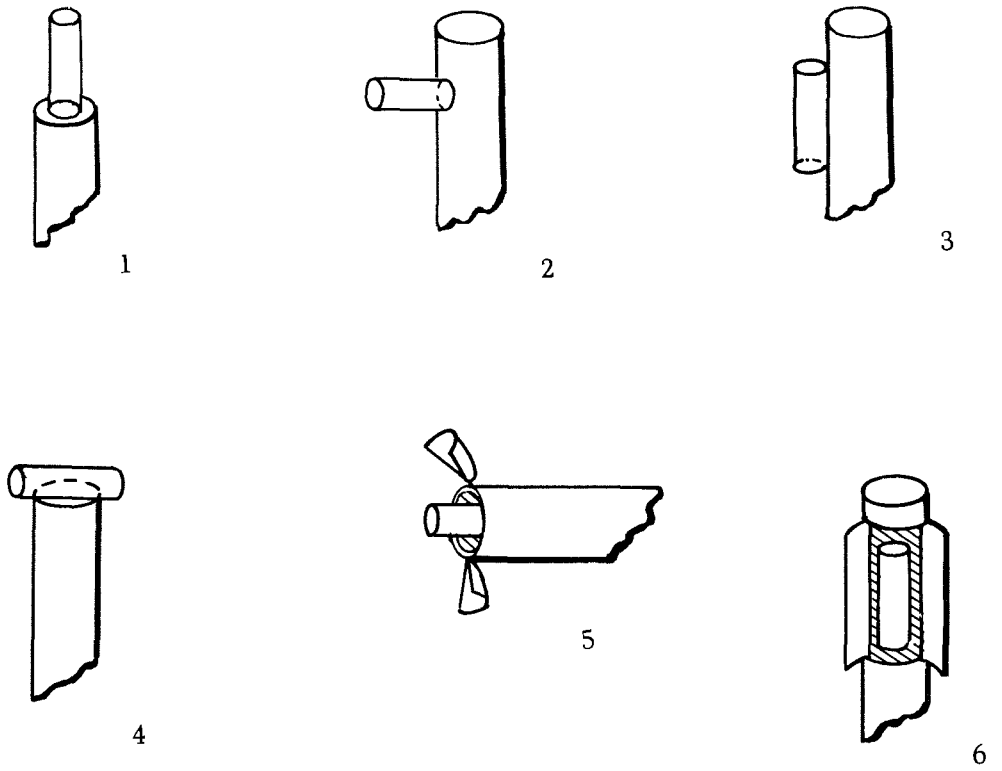

Figure 17. Methods of docking payload to Space Station.

An assessment of each of the above configurations is presented in Table 6. On the basis of these assessments and using the payload (Station interface complexity as the prime judging criterion), configurations 1, 2, 3, and 4 appear to offer the most promise. Of these, configuration 1 (payload end to Station end) was tentatively selected as the preferred mode.

d. On-Orbit Payload Return Transfer. The potential methods available for retrieval of the payload from the Space Station back to the Shuttle's Orbiter vehicle are similar to those for the reverse situation (Orbiter to Station). Thus, the use of the Space Station boom concept in conjunction with the translational device aboard the Shuttle was tentatively chosen as the preferred mode of operation.

e. On-Orbit Payload Placement in Orbiter. The return of the payload back into the Orbiter for return from orbit is somewhat different from its original deployment (extraction). Here, the payload is pulled back into the cargo bay. On the basis of having the simplest system for the entire on-orbit mission, a mechanical attachment approach (payload grabbers) was

TABLE 6. DOCKING CONFIGURATION ASSESSMENT

CONFIGURATION	ADVANTAGES	DISADVANTAGES
1. Payload End to Station End	(a) Simple. (b) Minimal payload - Station interface. (c) More contact surface than 1.	(a) Some attitude control problems introduced to Station.
2. Payload End to Station Side	(a) Simple. (b) Minimal payload - Station interface.	(a) Some attitude control problems introduced to Station.
3. Payload Side to Station Side	(a) Simple. (b) Small payload - Station interface.	(a) Some attitude control problems introduced to Station (less than 1).
4. Payload Side to Station End	(a) Simple. (b) Minimal payload - Station interface.	(a) Some attitude control problems introduced to Station (less than 1).
5. Payload Inserted into Station End	(a) Maximum area available for cargo/passenger transfer.	(a) Some attitude control problems introduced to Station. (b) Large payload - Station interface. (c) Docking is more difficult than 1.
6. Payload Taken in Through Station Side.	(a) Maximum area available for cargo/passenger transfer.	(a) Some attitude control problems introduced to Station. (b) Large payload - Station interface. (c) Docking is more difficult than 2.

selected as the preferred system for payload retrieval. These grabbers would be installed as part of the translational device used for unloading the payload from the Orbiter vehicle. The device locks onto the payload, the payload is translated back into the cargo bay, and the access doors are closed and secured. Note that this concept improves the versatility of the Shuttle with respect to alternate missions.

f. Crew Access Tunnel Assessment. There has been considerable discussion to date regarding the desirability of incorporating a crew-cabin-to-payload access tunnel into the basic Shuttle's Orbiter design. An investigation into this possibility was conducted during the recent studies; the advantages and disadvantages of such a tunnel [4] are given in Table 7.

TABLE 7. CREW-CABIN-TO-PAYLOAD TUNNEL ASSESSMENT

ADVANTAGES
• Crew has ready access to the payload compartment for on-orbit operations and to assist in providing increased alternate mission capability.
• Provide capability for transfer of the Shuttle crew to the Space Station via a cargo or cargo/personnel module.
• Provides a possible alternate escape route during abort situations.
DISADVANTAGES
• Additional pressurization and power requirements.
• Uses volume otherwise available for Shuttle subsystems.
• May interfere with Orbiter's propellant tank placement.
• May necessitate a change in the basic vehicle moldline.

One possible placement arrangement for such a tunnel is shown in Figure 18. This tunnel, as shown, would run along the top center of the Orbiter connecting the crew cabin, whether 2- or 6-man, to the payload bay.

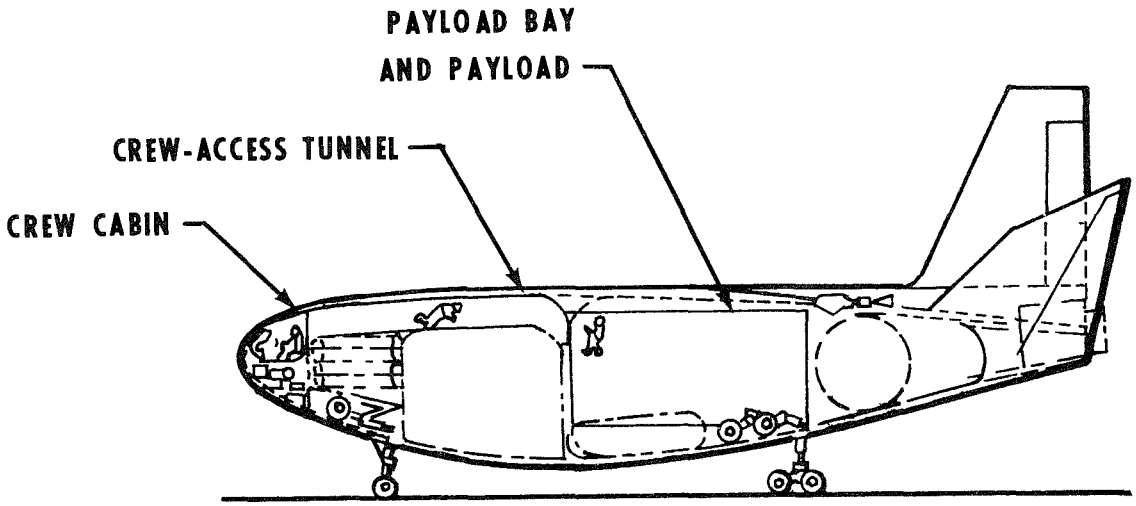

Figure 18. Crew-access tunnel placement [4].

The most important advantages of having such a tunnel and the areas that make its existence worthwhile are that it gives the crew access to the payload area while on orbit, thus providing the vehicle increased alternate mission capability and allowing the crew to transfer IVA to the Space Station via the crew/cargo module.

g. Passenger Safety — Quick On-Pad Exit. Shuttle studies to date have made provisions for total personnel loads (passengers and crew) ranging from a low of 2 to high of 50 persons. With this number and spread of personnel to be accommodated, it has been considered mandatory that some method of quick escape should be provided for on-the-pad emergency situations. Five possible procedures (Table 8) were investigated by McDonnell-Douglas in their recent ILRV study [4].

Of possible alternatives given in Table 8, the use of a quick-exit tunnel (alternative 1) was judged to be the quickest and the simplest. However, the depth provided by the recent ILRV studies was not considered sufficient and further analysis of the safety procedures is strongly recommended.

TABLE 8. METHODS OF ON-PAD PASSENGER QUICK EXIT

- Blow hatch in payload canister, traverse tunnel, open hatch in payload doors, slide down cable
- Open payload doors, translate payload canister out, open hatch in payload canister, slide down cable
- Open payload doors, remove payload canister, transfer entire payload canister to safe area
- Open hatch in payload canister, climb through crew-access tunnel, escape through crew quick-egress hatches, slide down cable
- Blow hatch in payload canister, open payload doors, slide down cable

The advantages and disadvantages of these five methods are given in Table 9. On the basis that a quick-exit tunnel is the preferred method of extracting the passengers in an emergency situation, an assessment was made of the desirability of incorporating such a tunnel into the baseline Orbiter vehicle. The advantages and disadvantages of the use of such an escape system are shown in Table 10.

This tunnel is presently envisioned as a nonpressurized unit attached to one of the cargo bay doors. At the cargo bay door there would be a hatch and at the payload canister-tunnel interface there would be another hatch (the smaller one). Both of these closures would be quick opening devices blown outwardly open (safely) on abort command. The tunnel would be quite short-extending only from the payload module to the cargo bay doors. It might be advisable to position it in an inclined manner when the Shuttle is in a vertical, launch position to provide for more rapid exit of the passengers.

h. Payload-Handling Facilities. On-orbit-handling facilities are not described in detail although some major items of handling equipment can at this time be identified. The preferred mode of cargo transfer has been previously identified as the "pantry" concept wherein the Shuttle and Station,

TABLE 9. PASSENGER ON-PAD QUICK EGRESS METHOD ASSESSMENT

METHOD	ADVANTAGES	DISADVANTAGES
1. Escape Tunnel	• Simple • Very little additional equipment • Minimal physical effort required of passengers	• Slow (probably fastest method)
2. Utilization of Onboard Translational Devices	• Simple • Uses existing equipment • Minimal physical effort required of passengers	• Relatively slow (slower than 1)
3. Remove Payload Canister Intact	• No physical effort required of passengers	• Requires heavy equipment • Very slow • Complex
4. Utilize Crew-Access Tunnel	• Simple • Uses existing equipment	• Prohibitively slow • Requires large physical effort by passengers
5. No Escape Tunnel, Open Doors	• Simple • Uses existing equipment • Minimal physical effort required of passengers	• Relatively slow (slower than 1) • Nothing to bridge gap between payload and doors

TABLE 10. QUICK-EXIT TUNNEL ASSESSMENT

ADVANTAGES
• Provides quick escape route for passengers for an on-pad engines-down abort. • Provides crew with alternate escape route for on-pad passenger loading mode with payload bay doors closed.
DISADVANTAGES
• Uses volume otherwise available for Orbiter subsystems. • May interfere with placement of Orbiter propellant tank(s).

Note: With these in mind, and considering past events, it is recommended that such a capability be included in the basic vehicle design.

acting in concert with each other, use translation devices and transfer a module from the Shuttle and dock it to the Space Station — with no hard docking attempted between the Shuttle and the Station. Docking hardware on the cargo/passenger module would be needed to attach it to the Space Station.

Having attached the module to the Station, some means must be provided for transferring the cargo on an as-needed basis. Certain general items for this operation (i.e., handrails, quick disconnect tie-downs, etc.) have been referenced earlier. However, some provisions will probably have to be made for transfer of larger, heavier, nonroutine cargo such as experiment or data-handling equipment. For items such as these, the required manually operated moving equipment could possibly be located on board the Space Station. This would allow its repeated use with numerous missions and allow for handling of heavy return cargo.

In addition to the facilities for housing and transporting the passengers (scientists, engineers, technicians — all nonastronaut physical fitness types), some special provisions will need to be provided for loading, emergency situation unloading, seating while awaiting lift-off, environmental control

during the flight, and transfer of passengers to the Space Station. It is presently anticipated that a walk-on capability will be available from the service tower, that all passenger transport is in a shirt-sleeve environment, and that no passengers are involved in cargo transfer.

IV. SPECIAL MISSIONS

It is currently envisioned that the special missions for the Space Shuttle will be primarily of three types: (1) delivery and deployment of propulsive stages and experiment modules, (2) placement, retrieval, and maintenance of satellites, and (3) short-duration orbit missions wherein the Shuttle serves as a small Space Station/earth-observation vehicle, or it is used as a rescue craft. The potential mission cargo-handling procedures are discussed below.

A. Delivery and Deployment of Propulsive Stages and Payloads

For these missions, a method of extracting the propulsive stage/payload from the Shuttle while in orbit will be required. The attitude control system of the payload itself could possibly be used for this purpose; however, the limited space available for maneuvering inside the bay and the potential damage from exhaust impingement makes this an undesirable approach. Some mechanical method of deployment is therefore desirable. It is presently envisioned that this deployment scheme could possibly be quite similar, if not identical, to that used for deployment of the cargo/personnel module discussed earlier. Thus, the propulsive stage could be translated out of the bay and released ready for further activity. One possible concept of such an operation is shown in Figure 19. No specific deployment time has

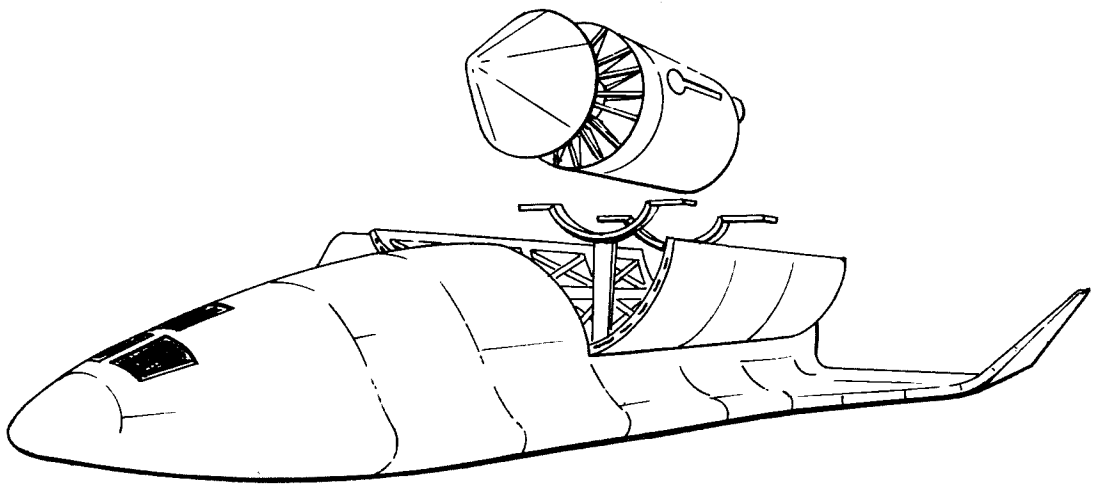

Figure 19. Deployment of a propulsive stage/payload.

been specified, but all systems investigated to date would allow deployment with very small induced loads in a time span of less than 5 minutes.

A universal docking ring on the individual payloads may prove very desirable. Such a ring would allow either identical half, by desire or circumstances, to remain passive. Such a ring may prove to be especially attractive for manned payloads as it would allow for the passage of pressurized tunnels and their coupling devices through the inside of the ring.

In addition to the normal docking requirements for impact absorption, capture, and mating, the capability for rotational positioning (indexing) may prove desirable during docking operations. Lateral support will be required for these payloads during re-entry, maneuvering, and landing. Since these support paths and pin-attachments locations are fixed, the propulsive stage may need to be rotated prior to retraction into and securing in the cargo bay.

B. Satellite Placement, Retrieval, and Maintenance

Figure 20 presents four possible concepts for servicing satellites in earth orbit. These concepts were investigated during the recent ILRV studies [1].

In Concept A, the Shuttle would retrieve the inoperative satellite or, attached module, return it to earth for maintenance, and later, on another Shuttle flight, redeploy it in the desired orbit. This approach avoids the problems associated with maintenance performance in orbit, such as pressurized work areas and required repair equipment. However, two Space Shuttle round trips are required and the costs associated with such a method may make this concept unattractive. This approach could be used with a minimum of modification to the Space Shuttle after the addition of a docking adapter — provided, of course, that the satellite already possessed docking provisions.

In Concept B, it was assumed that the satellites deployed during the Shuttle's operational timeframe would have in-orbit maintenance provisions incorporated. Such provisions would, as presently envisioned, include a pressurizable work volume and a docking port. Thus, the maintenance personnel could provide a supply of the components most likely out of commission, enter the satellite after docking, and effect the repair and reactivation. This concept would also minimize special requirements on the

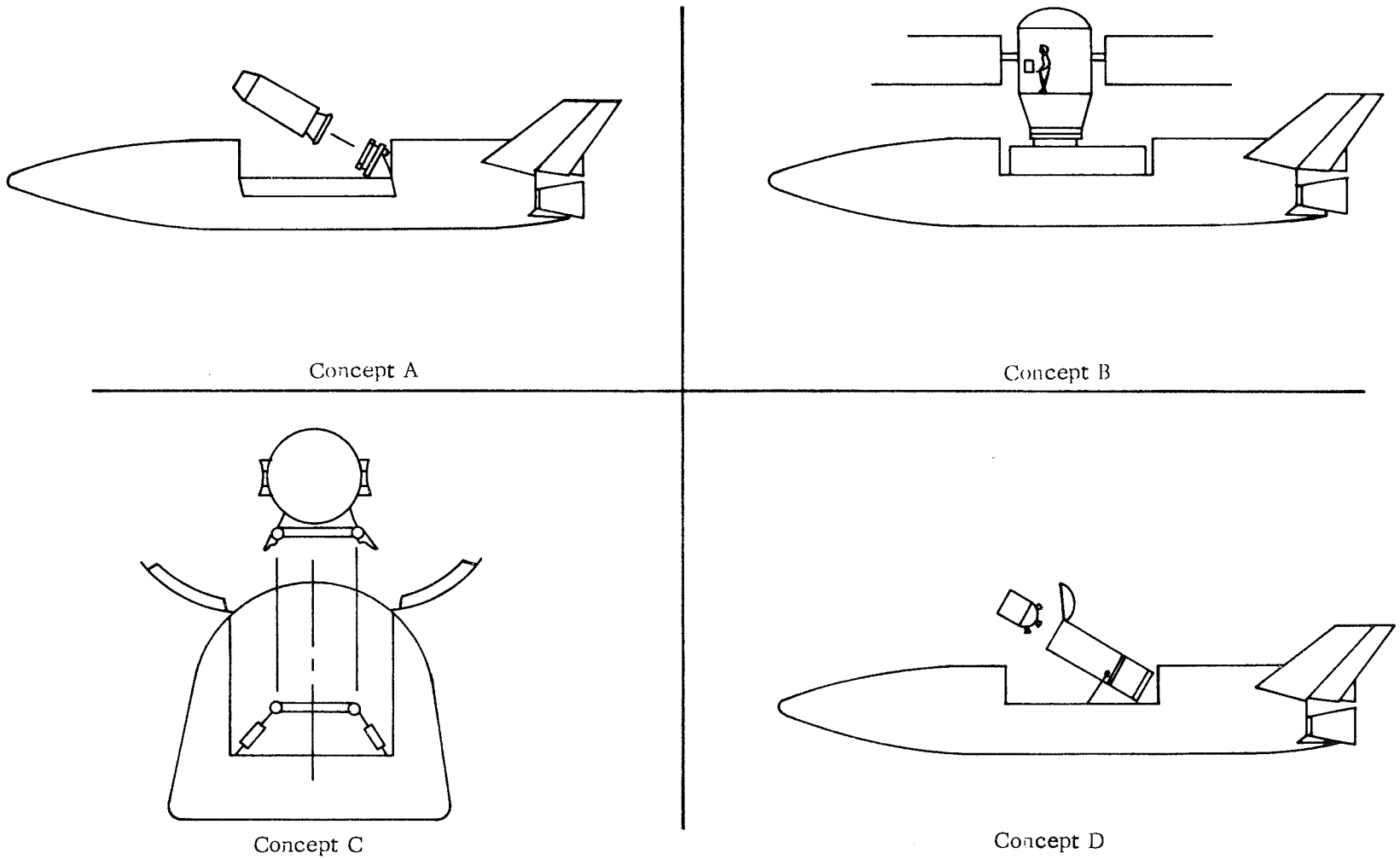

Figure 20. Basic satellite servicing concepts [1].

Space Shuttle. The primary disadvantage entailed by this concept is that it would require all satellites have maintenance work volumes, etc., built in.

Concept C envisions a Space Shuttle with a built-in pressurizable cargo bay that would provide a shirt-sleeve work environment for satellite maintenance. It is currently estimated that this would result in a 15 000-pound penalty to the basic payload capability on all missions not requiring a pressurized payload bay.

Concept D would use a pressurizable maintenance module in conjunction with a small 4- to 6-man module. These modules would be installed in the payload bay, equipped with the needed provisions, and while on orbit deployed to the desired operational position — one concept is shown in Figure 20. The end of the module is opened and the satellite is maneuvered into the module (via movement of the satellite or Shuttle or both), the end is closed, the module pressurized, the repairs or retrofits are effected, and the satellite is redeployed in the desired orbit. As presently envisioned, this concept would not unduly penalize the satellite or the Space Shuttle. Therefore, on the basis of maximum Shuttle versatility and minimum interfaces, this concept is recommended as the preferred mode of operation, pending further assessment.

For most of these type missions, rendezvous and docking will be accomplished with a stable, controllable satellite. In some instances, however, the target may be tumbling about an arbitrary axis with no capability for control. Such a condition could possibly exist in either a satellite retrieval/maintenance or rescue mission.

One promising technique, which has been studied in connection with several different satellites, involves alignment of the capturing vehicle (in our case the Space Shuttle) such that the retrieval device is aligned with the rotational axis of the satellite, spinning up a retrieval mechanism to the target velocity, grappling the target, despinning the target, and then proceeding as with any other cooperative unit.

It is presently considered quite likely that more than one technique may be employed for capture of various targets (both cooperative and non-cooperative) by the Shuttle's Orbiter vehicle. The optimum method is expected to vary with type of target, spin rate, equipment deployed (solar panels), etc. In addition, the capture technique chosen may depend on whether the intent is to retrieve the target, dock with it, or only perform detailed inspection.

C. Short-Duration Missions

The Orbiter stage of the Space Shuttle is currently envisioned as capable of performing as a short term (up to 30 days) orbital laboratory or sensor platform. In this mode of operation, the experimental equipment or module would remain in the payload bay as shown in Figure 21. If required, the doors could be opened to provide a more unobstructed view or for temporary deployment of sensors, etc. Some candidate missions currently considered for this mode of operation are the following:

1. Earth surveys.

2. Material science and processing experiments.

3. Component tests and sensor calibrations.

4. Human factors experiments (onboard centrifuge).

A summary of possible earth-survey missions [1] is shown in Table 11 along with an estimate of the nature of the survey and kind of sensors required. It is presently anticipated that the sensors and required support equipment would also be in modules for installation and use in the cargo bay.

D. Rescue

Since many aspects of a Space Station design and operation (from the space environment through the crew behavior) are treated on a probability basis, provisions must be made for the occurrence of improbable events. Emergencies on board the Space Station could require emergency flights of the Space Shuttle to deliver cargo or evacuate passengers.

The cargo flights will be used to deliver spares and components to repair system failures or damage caused by meteoroid impact, collision with other vehicles, or space debris. It may also be necessary to deliver expendables such as oxygen, nitrogen, and propellant to make up losses because of failure. The time available to deliver this cargo cannot be specified because of the multitude of possible emergencies and alternative courses of action available to the Station crew. However, if the malfunction or damage is repairable, the crew is probably not in serious danger for at least a few days, because of the compartmentized Space Station design.

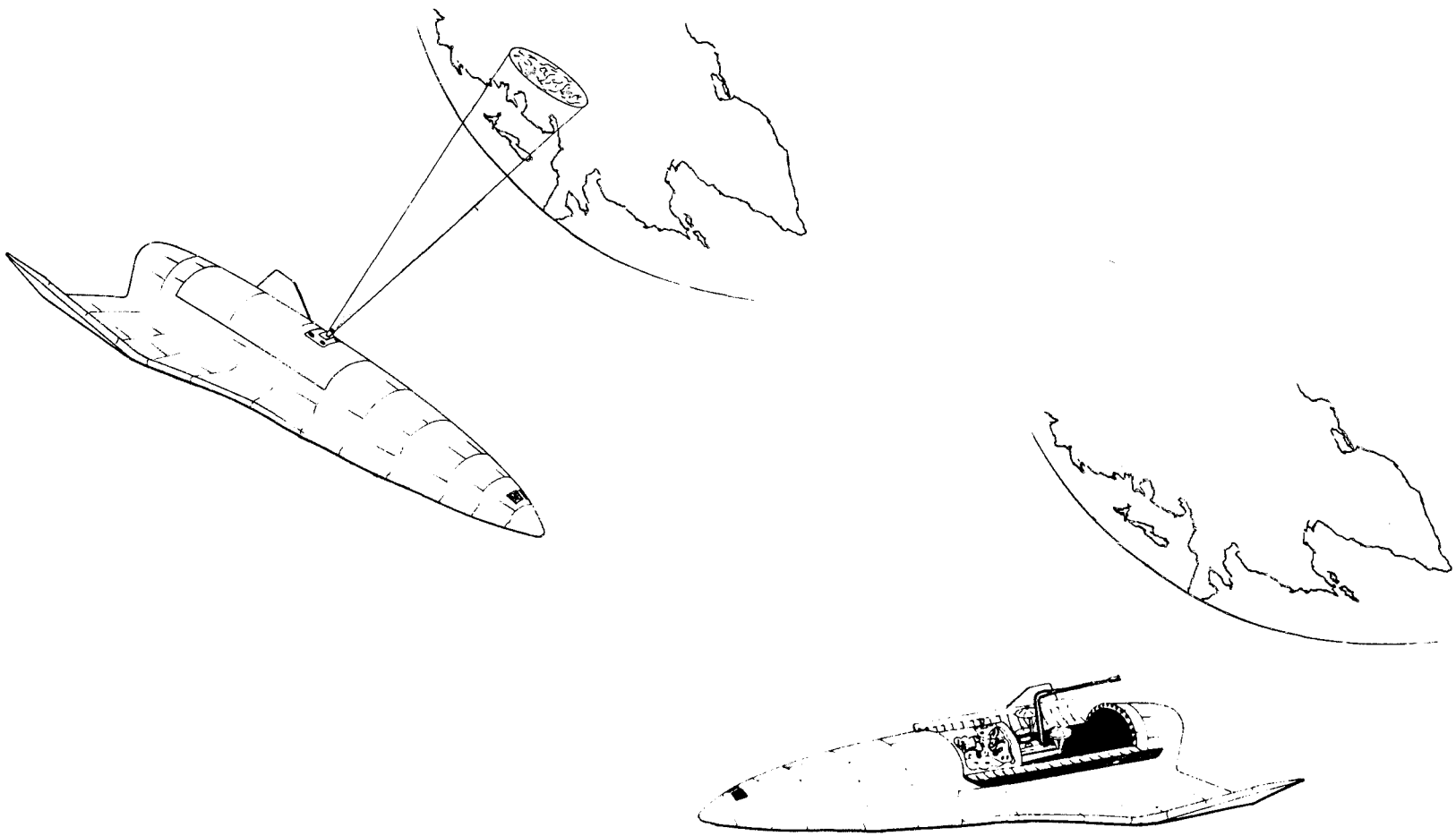

Figure 21. Short-duration earth-orbital observation missions.

TABLE 11. POSSIBLE EARTH SURVEY MISSIONS

	Cultural Resources									Natural Resources								Earth Sciences							
	Agricultural																								
	Soils			Crops				Transportation		Fresh Water			Forestry			Wildlife								Natural Disasters		
	Quality	Temperature	Moisture	Quality	Species	Population Distribution	Urban Land Use	Development	Control	Sources	Distribution	Pollution	Distribution	Quality	Marine Life	Distribution	Migration	Cartography	Geological Resources	Geophysics	Geodesy	Oceanography	Floods	Fires	Internal Effects
Metric Cameras	X		X	X	X	X	X	X		X	X		X	X	X	X	X	X	X	X	X	X	X		X
Panoramic Cameras	X		X	X	X	X	X	X		X	X	X	X	X	X	X	X	X	X	X	X	X	X		X
Tracking Telescope	X		X	X	X	X	X	X	X	X	X	X	X	X	X	X	X	X	X	X		X	X	X	X
Synoptic Cameras						X	X	X		X	X	X	X		X	X		X	X	X		X	X		X
Radar Imager	X						X	X	X	X	X	X	X		X			X	X			X	X	X	
Radar Altimeter/Scatterometer								X		X	X				X				X			X			
Wide-Range Spectral Scanner (O-M)	X	X	X	X	X		X	X		X	X	X	X	X	X	X	X		X	X		X	X	X	X
R Spectrometer					X		X	X		X	X	X			X				X	X		X			X
R Radiometer		X	X				X	X		X	X	X	X	X	X	X	X		X	X		X	X	X	X
Microwave Imager (Passive			X					X		X	X	X							X	X		X	X		X
Microwave Radiometer		X	X					X		X	X	X							X	X		X	X	X	X
UV Imager/Spectrometer																			X			X			X
Laser Altimeter/Scatterometer																			X	X	X	X	X		
Absorption Spectrometer																			X						
Radio Reflectometer										X	X				X				X			X			
Magnetometer																			X	X	X	X			
Gravity Gradiometer															X				X	X	X	X			
Ground Sensors		X	X						X	X	X						X			X		X		X	X

The more critical situations are those requiring the emergency evacuation of crew members or abandonment of the Station entirely. Some of the major events that could result in such emergencies are listed in Table 12, with possible courses of action. The availability of a rescue vehicle is necessary if the Station is to be abandoned immediately.

TABLE 12. POTENTIAL MAJOR SPACE STATION EMERGENCIES

Abandon the Station immediately

1. Excursion of nuclear power source.
2. Major explosion and/or fire.

Quick rescue required (within hours)

1. Severe solar flare.
2. Nuclear burst.
3. Major failure of power subsystem.
4. Major failure of life support subsystem.
5. Sick or injured crew member.
6. Station damaged caused by meteoroid impact.

Planned rescue possible (within days)

1. World situation — threat of war.
2. Major failure of critical subsystem (i.e., Station maintenance).

These emergency situations may impose stringent requirements on the Space Shuttle if it is to operate as an efficient rescue craft. The first and perhaps the most critical requirement possibly imposed would be that of

rapid response. The Space Shuttle should be capable of being loaded with emergency cargo, where necessary, and launched at the first reasonably available window. After the contact is made in orbit, it should be capable of returning within 24 hours or have provisions on board for life support and maintenance of the rescued persons.

It may be necessary to transfer personnel from an unpressurized station. This type action would normally require either an airlock or the ability to depressurize the Space Shuttle for the transfer. In addition, the mobility of the personnel may be severely reduced by the inflated space suit. Special personnel modules could be used for this rescue mission.

The capability for rendezvous and possible docking with a noncooperative target may be required when the Station is damaged. The only assistance that could be anticipated from the target vehicle would be a simple beacon. Extravehicular transfer of personnel and some cargo may be required if some portion of Space Station is inoperative.

Further analysis of the possible rescue situations and appropriate responses is now in progress and the results will be reported later.

V. CONCLUSIONS AND RECOMMENDATIONS

Based on the study effort discussed in this report, the tentative conclusions in the following paragraphs have been reached.

A. Tentative Conclusions

1. A cargo/personnel module delivered by the Shuttle may possibly be able to handle all of the logistics needs of the Space Station. This unit could be transferred in a two-step operation to the Station by deployment-extraction-translation devices aboard the Shuttle. This cargo/personnel module will weigh approximately 12 000 to 15 000 pounds, will be pressurized to the same pressure as the Space Station, and should be designed to remain on orbit in a "pantry" type of operation for 90 days.

2. A docking procedure may be possible whereby neither the standoff condition (requiring development and use of a Tug) nor the "hard-dock" condition is required. This two-step translation scheme allows the cargo/personnel module to be delivered and the previous one picked up in a few hours so that no significant on-orbit loiter time is required. However, some Shuttle loiter may be required if a significant crew overlap period is desired.

3. A crew-cabin payload bay tunnel is desirable and should probably be included as a requirement in all future Shuttle design efforts.

4. A cargo/personnel module to cargo bay door escape tunnel may be needed as an integral part of all future design effort.

5. The Space Shuttle will probably be handling its propellant delivery tasks in a manner quite similar to the way it delivers other cargo and personnel. Therefore, it is presently envisioned that the propellant and its container tank will be transferred as an integral unit.

B. Recommendations

In addition to the above conclusions, this study has resulted in the following reccommendations:

1. Study effort in the area of cargo handling should be continued with the results of the various contracted efforts being integrated and reported on a periodic basis.

2. Additional investigation should be initiated into the technology of orbital cryogen transfer and into the potential engineering problems (quick disconnects, rotating seals, etc.) associated with an orbital propellant storage facility.

3. Additional trade-off studies should be conducted with regard to the desired or required propellant line and subsystem interfaces associated with the use of the Shuttle for delivery of cryogenic propellants to orbit.

4. Additional investigation should be initiated on systems tradeoffs associated with a 6- or 8-man Orbiter cab versus a cargo/personnel module.

5. The docking procedures analyses have not resulted in any firm conclusions to date. Therefore, it is recommended that further effort be expended in the examination of possible methods. It is also recommended that this investigation include dynamics, stability, and reaction control analysis.

6. Additional tradeoff studies are recommended to examine the desirability of a Space Tug for on-orbit transfer of passengers/cargo, in comparison with translation devices or other methods.

REFERENCES

1. Space Shuttle — Final Technical Report. General Dynamics-Convair Division, San Diego, California, GDC-DCB69-046, Contract NAS9-9207 (MSFC), October 31, 1969.

2. Integral Launch and Reentry Vehicle — Final Report. Lockheed Missiles and Space Company, Sunnyvale, California, LMSC-A959837, Contract NAS9-9206 (MSFC), December 22, 1969.

3. Spacemaster — A Two-Stage Fully Reusable Space Transportation System. Martin-Marietta Corporation, Denver, Colorado, M-69-36, December 1969.

4. Integral Launch and Reentry Vehicle Systems. McDonnell-Douglas Corporation, St. Louis, Missouri, MDC E0049, Contract NAS9-9204 (MSFC), November 1969.

5. Integral Launch and Reentry Vehicle Systems. North American Rockwell Corporation, Downey, California, SD 69-573, Contract NAS9-9205 (MSC), December 1969.

6. NASA Space Shuttle Summary Report. Prepared by the NASA Space Shuttle Task Group, June 1969.

7. Integrated Space Program — 1970-1990. MSFC Internal Note IN-PD-SA-69-4, Huntsville, Alabama, December 1969.

8. Burge, G. N.; Blackmon, J. B.; and Madsen, R. A.: Analytical Approaches for the Design of Orbital Refueling Systems. McDonnell-Douglas Astronautics Company, Presented at the AIAA Fifth Propulsion Joint Specialist Conference, June 1969.

9. Boretz, J. E.: Orbital Refueling Techniques. TRW Systems Group, Presented at the AIAA Fifth Propulsion Joint Specialist Conference, June 1969.

10. Wood, C. C.; and Trucks, H. F.: Evaluation of Experiment and Analytical Data for Orbital Refueling Systems. NASA-Marshall Space Flight Center, Presented at the AIAA Fifth Propulsion Joint Specialist Conference, June 1969.

APPROVAL

AN ANALYSIS OF POTENTIAL SPACE SHUTTLE CARGO-HANDLING MODES OF OPERATION

By Walter E. Whitacre

The information in this report has been reviewed for security classification. Review of any information concerning Department of Defense or Atomic Energy Commission programs has been made by the MSFC Security Classification Officer. This report, in its entirety, has been determined to be unclassified.

This document has also been reviewed and approved for technical accuracy.

G. F. von Tiesenhausen

G. F. von TIESENHAUSEN
Chief, Orbital Systems Group

CONCURRENCE:

W. G. Huber

W. G. HUBER
Director, Advanced Systems Analysis Office

W. A. Mrazek

W. A. MRAZEK
Manager, Space Shuttle Task Team

W. R. LUCAS
Director, Program Development

MSFC—RSA, Ala

DISTRIBUTION

INTERNAL

DIR

DEP-T

AD-S

PD-DIR
Dr. W. R. Lucas/J. T. Murphy
Dr. W. A. Mrazek

PD-RV
Mr. O. C. Jean
Mr. L. F. Lawson
Mr. W. Corcoran
Mr. J. Fikes
Mr. A. Finzel
Mr. H. Kroh
Mr. M. Akridge
Mr. J. Mack/F. Hammers
Mr. R. Wolf

PD-SS
Mr. W. A. Brooksbank
Mr. H. R. Palaoro
Mr. J. H. Brown
Mr. G. A. Keller
Mr. R. E. Lavender
Mr. K. K. Dannenberg
Mr. T. A. Barr
Mr. R. Barraza
Mr. J. R. Bramlet
Mr. R. W. Hunter
Mr. G. P. Pedigo
Mr. H. K. Brown

PD-PP-DIR
Mr. B. Sneed/J. Jackson (5)

PD-PS-DIR
Mr. J. C. Goodrum/W. Lucero

PD-PS-S
Mr. V. L. Looney

PD-MP-DIR
Mr. J. A. Downey/H. Gierow

PD-MP-A
Mr. J. R. Olivier
Mr. O. Guffin

PD-MP-S
Mr. C. C. Dailey (3)

PD-MP-T
Mr. W. T. Carey (5)

PD-MP-P
Mr. H. Dudley (5)

PD-DO-DIR
Mr. E. Goerner
Dr. H. Thomason
Mrs. F. Andrews

PD-DO-S
Mr. W. R. Marshall (5)

PD-DO-SR
Mr. L. B. Allen (3)

PD-DO-SI
Mr. C. R. Darwin (3)

PD-SA-DIR
Mr. W. G. Huber/L. Spears (5)

DISTRIBUTION (Concluded)

PD-SA-O
Mr. G. von Tiesenhausen
Mr. D. Cramblit
Mr. E. Butler
Mr. W. Thompson
Mr. W. Stafford
Mr. W. Whitacre (75)

A&TS-FAC-DIR
Mr. H. A. Schultze

PD-SA-L
Mr. T. H. Sharpe
Mr. E. Valentine
Mr. C. Rutland

PD-SA-V
Mr. A. Orillion

PD-SA-P
Mr. R. J. Harris (3)

A&TS-PAT
Mr. L. D. Wofford, Jr.

PM-PR-M

A&TS-MS-H

A&TS-MS-IP (2)

A&TS-MS-IL (8)

A&TS-TU (6)

Scientific and Technical Information Facility (25)
P. O. Box 33
College Park, Maryland 20740
Attn: NASA Representative (S-AK/RKT)

EXTERNAL

NASA Headquarters
Mr. P. Culbertson, MLA
Mr. D. Lord, MTD
Dr. F. Dixon, MTY
Mr. T. Hagler, MTY
Mr. R. Lohman, MTY
Mr. R. Lovelett, MTY
Mr. B. Noblitt, H-1
Mr. M. Waugh, MTP
Mr. E. Hall, MTG
Mr. M. Markey, MTG
Mr. N. Peil, MTG
Mr. D. Schnyer, MTV
Dr. J. Wild, MTE
Mr. W. Armstrong, MTX
Dr. H. Hall, MTX
Dr. R. Johnson, MTX
Mr. J. Mason, MOG

Langley Research Center
Mr. E. Love, Code 186

Kennedy Space Flight Center
Mr. M. Preston, DE/M

Manned Spacecraft Center
Mr. R. Thompson, LA (25)
Mr. J. Hodge, HA