https://ntrs.nasa.gov/search.jsp?R=19700019508 2018-07-24T18:10:51+00:00Z

N 70 28818

NASA CR 110015

Antenna Laboratory Report No. 70-6

REMOTE PROBING OF INHOMOGENEOUS MEDIA USING PARAMETER OPTIMIZATION TECHNIQUES

CASE FILE COPY

by

M. Mostafavi and R. Mittra

Scientific Report No. 14

April 1970

Sponsored by

National Aeronautics and Space Administration

NGR-14-005-009

Antenna Laboratory
Department of Electrical Engineering
Engineering Experiment Station
University of Illinois
Urbana, Illinois 61801

Antenna Laboratory Report No. 70-6

REMOTE PROBING OF INHOMOGENEOUS MEDIA USING PARAMETER OPTIMIZATION TECHNIQUES

by

M. Mostafavi and R. Mittra

Scientific Report No. 14

April 1970

Sponsored by

National Aeronautics and Space Administration

NGR-14-005-009

Antenna Laboratory
Department of Electrical Engineering
Engineering Experiment Station
University of Illinois
Urbana, Illinois 61801

UILU-ENG-70-301

ABSTRACT

This paper discusses the problem of remote probing and diagnostics of an inhomogeneous medium whose properties vary along a single dimension only. The medium is described in terms of a set of unknown parameters that are determined via parameter optimization techniques. These techniques adjust the trial parameters describing the medium such that the response of the trial medium agrees closely with that of the actual medium.

ACKNOWLEDGMENT

The author wishes to thank Dr. R. Mittra for his supervision in the preparation of this thesis. The research was sponsored by the National Aeronautics and Space Administration under Grant No. NASA-NGR 14-005-009.

TABLE OF CONTENTS

Page

1. INTRODUCTION..... 1

2. INVERSION OF STRATIFIED INHOMOGENEOUS MEDIA..... 2

3. INVERSION OF CONTINUOUSLY VARYING MEDIA..... 12

4. INVERSION OF CIRCULARLY STRATIFIED MEDIA..... 37

BIBLIOGRAPHY..... 45

APPENDICES..... 46

LIST OF TABLES

Table		Page
1	Numerical Results for a Single Layered Dielectric Slab.....	8
2	Numerical Results for a Two-Layered Dielectric Slab.....	8
3	Numerical Results for a Three-Layered Dielectric Slab.....	8
4	Comparison of Given Reflection Coefficient Data with Those Obtained by Using the Numerically Determined Dielectric Constant Parameters of the Three-Layered Medium..	11
5	Comparison of the Scattered Electric and Magnetic Field Amplitudes for the Exact and Inverted Profiles. $k_0 = 1$.....	23
6	Comparison of the Scattered Electric and Magnetic Field Amplitudes for the Exact and Inverted Profiles Adding Random Noise to Simulated Data. $k_0 = 1$.....	25
7	Comparison of the Scattered Electric and Magnetic Field Amplitudes for the Exact and Inverted Profiles. $k_0 = 1$.....	28
8	Comparison of the Scattered Electric and Magnetic Field Amplitudes for the Exact and Inverted Profiles. $k_0 = 1$.....	31
9	Comparison of the Scattered Electric and Magnetic Field Amplitudes for the Exact and Inverted Profiles. $k_0 = 1.0$...	34
10	Comparison of the Scattered Electric and Magnetic Field Amplitudes for the Exact and Inverted Profiles. $k_0 = 1.0$...	36
11	Relevant Data Corresponding to the One-Layered Dielectric Cylinder.....	44
12	Comparison of the Exact and Numerically Obtained Relative Dielectric Constants of the Two-Layered Dielectric Cylinder.	44

LIST OF FIGURES

Figure		Page
1	A stratified medium consisting of M-1 homogeneous layers terminated by a perfect conductor	3
2	One-layered dielectric slab terminated by a perfect conductor	9
3	Two-layered dielectric slab terminated by a perfect conductor	9
4	Three-layered dielectric slab terminated by a perfect conductor	9
5	Wave incident at an angle θ on a continuously varying nonuniform medium terminated by a perfect conductor	14
6	Profile of dielectric constant $k^2(z) = e^{2z}$ for a slab terminated by a perfect conductor at $z = 1$. Conjugate gradients method	21
7	Profile of dielectric constant $k^2(z) = e^{2z}$ for a slab terminated by a perfect conductor at $z = 1$. Rosenbrock's method	22
8	Profile of dielectric constant $k^2(z) = e^{2z}$ for a slab terminated by a perfect conductor at $z = 1$. Random noise was added to the simulated data	24
9	Profile of dielectric constant $k^2(z) = e^{.5z}$ for a slab terminated by a perfect conductor at $z = 1$. Conjugate gradients method	26
10	Profile of dielectric constant $k^2(z) = e^{.5z}$ for a slab terminated by a perfect conductor at $z = 1$. Rosenbrock's method	27
11	Profile of dielectric constant $k^2(z) = 1 + .5z$ for a slab terminated by a perfect conductor at $z = 1$. Conjugate gradients method	29
12	Profile of dielectric constant $k^2(z) = 1 + .5z$ for a slab terminated by a perfect conductor at $z = 1$. Rosenbrock's method	30
13	Profile of dielectric constant $k^2(z) = 1 + z \sin 2\pi z$ for a slab terminated by a perfect conductor at $z = 1$. Conjugate gradients method	32

Figure Page

14 Profile of dielectric constant $k^2(z) = 1 + z \sin 2\pi z$ for a slab terminated by a perfect conductor at $z = 1$. Rosenbrock's method..... 33

15 Profile of dielectric constant $k^2(z) = 1 + \sin \pi z$ for a slab terminated by a perfect conductor at $z = 1$. Conjugate gradients method..... 35

16 A plane wave incident upon a uniform dielectric cylinder.... 38

17 A plane wave incident upon a two-layered dielectric cylinder..... 38

1. INTRODUCTION

In this paper we are concerned with the problem of remote probing and diagnostics of an inhomogeneous medium whose properties vary as a function of a single dimension only. The problem is posed as follows: given the scattering properties of the medium, find the function that describes the nonuniform nature of this medium. The approach to be taken for attacking the above problem begins by characterizing the medium in terms of a set of parameters, as yet unknown. Next, a search for these parameters is carried out until the response of the trial medium agrees closely, within a certain tolerance, with the measured response of the actual medium. The search procedure is essentially based on a parameter optimization approach which minimizes the norm of the difference between the measured response and the response of the trial medium.

Chapter 2 considers the case in which the medium is characterized by plane, homogeneous, stratified layers. Chapter 3 studies the more general case where the medium is continuously nonuniform. Finally, Chapter 4 deals with circularly stratified media with azimuthal symmetry. Numerical calculations are carried out for each of these three different types of media and the trial media derived by the parameter search method are compared with the actual media in order to exhibit the degree of success achieved via the parameter optimization procedure.

2. INVERSION OF STRATIFIED INHOMOGENEOUS MEDIA

Consider a stratified medium composed of M layers characterized by dielectric constants $\varepsilon_1, \varepsilon_2, \ldots, \varepsilon_M$. Assume that the permeability of the medium is identical to that of free space and that the losses in the medium are negligible. The problem at hand is to determine the characteristics of such a medium by analyzing the plane wave scattering properties of the medium. In order that we may work with the reflected wave alone, we consider the case where the (M-1) layer is terminated by a perfectly conducting plane. The incident plane wave that is employed to probe the medium is in general oblique, making an angle θ with the z axis, the axis along which the medium is stratified (see Figure 1). The electric field in the incident wave is assumed to be polarized entirely in the y direction, i.e., perpendicular to the plane of incidence. From the geometry of the problem, it is evident that the electric field in the reflected wave also contains the E_y component only.

We introduce a performance index F via the equation

$$F(\kappa_m) = \sum_{i=1}^{n} \left|\rho_i^g(\kappa_m^g,\omega_i,\theta) - \rho_i(\kappa_m,\omega_i,\theta)\right|^2 \tag{1}$$

where ρ_i^g and ρ_i are reflection coefficients of the actual and trial media, respectively, ω is the angular frequency, κ_m^g's are the relative dielectric constants of the actual medium, and κ_m's are the corresponding constants of the trial medium. The function F is then minimized (using one of the available numerical procedures) by varying the trial parameters κ_m.

The entire study is carried out on the computer; also, it is found convenient to calculate the response of the actual medium on the computer rather than finding it from experimental measurements. It is therefore

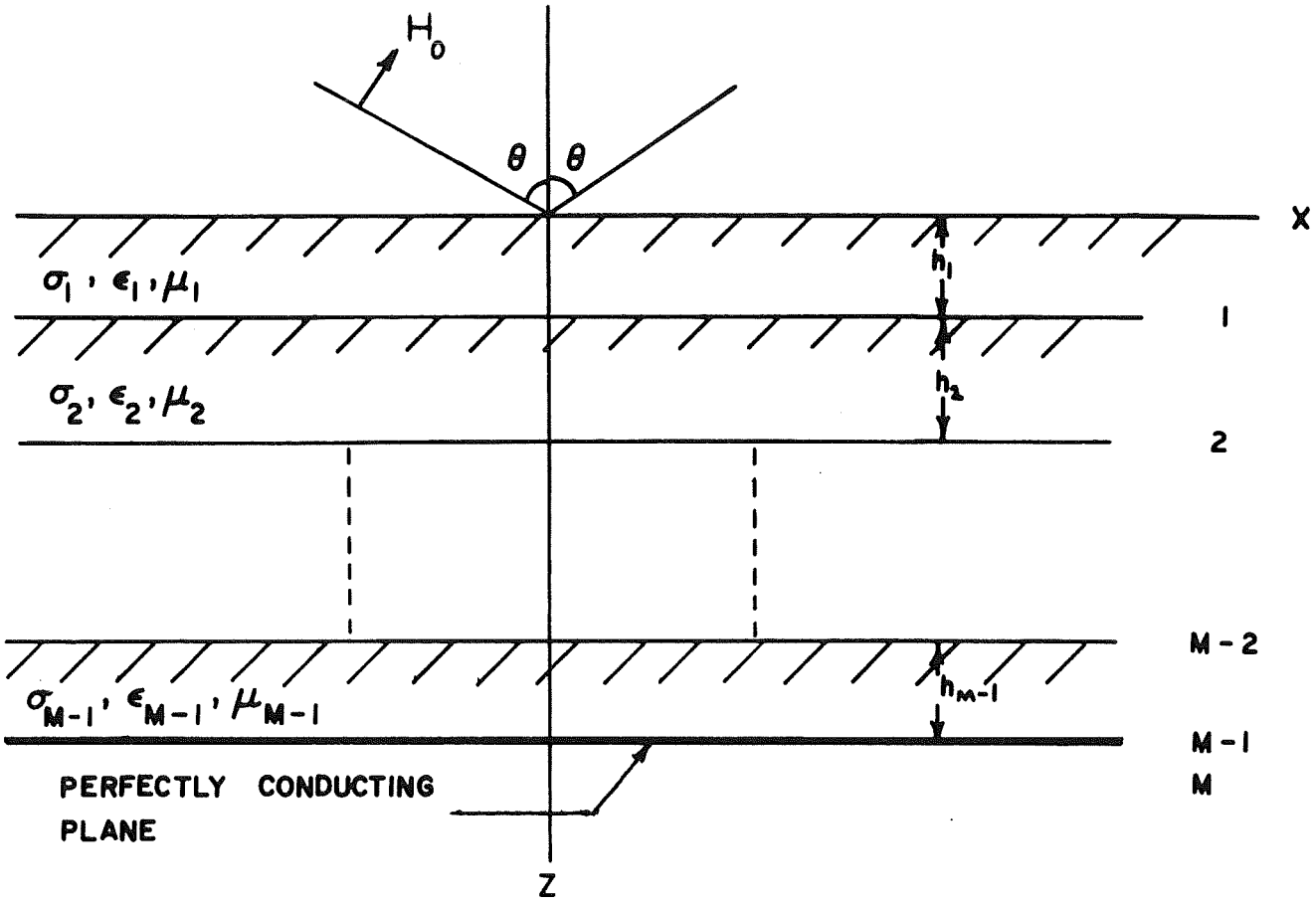

Figure 1. A stratified medium consisting of M-1 homogeneous layers terminated by a perfect conductor.

pertinent at this point to discuss the method by which the response of a stratified medium can be calculated for a specified set of values for κ_m and h_m.

By usual procedures, we can show that E_{my}, the y component of the electric field in the mth layer, satisfies the wave equation

$$(\nabla^2-\gamma_m^2)E_{my} = 0 \tag{2}$$

where

$$\nabla^2 = \frac{\partial^2}{\partial x^2} + \frac{\partial^2}{\partial y^2} + \frac{\partial^2}{\partial z^2}$$

$$\gamma_m^2 = -\varepsilon_m\mu_0\omega^2 = -\kappa_m\varepsilon_0\mu_0\omega^2.$$

It is assumed that $\sigma_m = 0$ and $\mu_m = \mu_0$, $m = 1, \ldots, M-1$, and κ_m is the relative dielectric constant of the mth layer.

The problem of inverting the medium from the knowledge of the E and H fields at the surface $z = 0$ is approached as follows. Start with a set of trial parameters $\kappa_m(=\varepsilon_m/\varepsilon_0)$ and h_m, the relative dielectric constant, and the depth of the mth layer, for $m = 0, \ldots, M-1$, and solve for the electric and magnetic fields at $z = 0$. The difference between the responses of the trial and the actual medium is used as a measure of accuracy within which the trial parameters agree with those of the actual medium. The determination of κ_m and h_m is carried out numerically using a parameter optimization scheme.

The general solution of (2) is of the form[1]

$$E_{my} = A_m e^{-u_m z - j\beta x} + B_m e^{u_m z - j\beta x} \tag{3}$$

where

$$\beta = -j\gamma_0 \sin\theta \text{ and } u_m^2 = \beta^2 + \gamma_m^2.$$

The corresponding H_{mx} is derived from

$$H_{mx} = \frac{-1}{j\omega\mu_0} \frac{\partial E_{my}}{\partial z} .$$

The reflection coefficient at the mth interface may be defined as

$$\rho_m = \frac{N_m - Y_{m+1}}{N_m + Y_{m+1}} ,$$

and, in particular, at the interface $z = 0$,

$$\rho = \frac{B_0}{A_0} = \frac{N_0 - Y_1}{N_0 + Y_1} \tag{4}$$

where $N_m = \frac{u_m}{j\mu_0\omega}$ and Y_m is the admittance looking into the mth layer.

$$Y_1 = -\left.\frac{H_{0x}}{E_{0y}}\right]_{z=0} = -\left.\frac{H_{1x}}{E_{1y}}\right]_{z=0}$$

$$Y_m = -\left.\frac{H_{mx}}{E_{my}}\right]_{z=m-1} . \tag{5}$$

For the special case of normal incidence, i.e., $\theta = 0$, $\beta = 0$, we have $N_m = \frac{1}{\eta_m}$. Here, η_m is the characteristic impedance of the medium given by $\eta_m = (\mu_m/\varepsilon_m)^{1/2}$.

Now, imposing the condition that the electric field is zero on the perfect conductor, it follows that $B_M = -A_M$. Also, from the continuity conditions at the interface $z = 0, 1, \ldots, M-1$, we get

$$E_{m-1,y} = E_{m,y} \Big]_{z=m}$$

$$(j\mu_{m-1}\omega)^{-1} \frac{\partial E_{m-1,y}}{\partial z} = (j\mu_m\omega)^{-1} \frac{\partial E_{m,y}}{\partial z} \Big]_{z=m}$$

$$m = 0, 1, \ldots, M-1.$$

We have 2(M-1) linear homogeneous equations for A_m and B_m in terms of the known coefficient A_0. Using these results in Equation (5), we find that the admittances Y_m satisfy recurrence relations of the form:

$$Y_1 = N_1 \frac{Y_2 + N_1 \tanh u_1 h_1}{N_1 + Y_2 \tanh u_1 h_1}$$

$$\vdots$$

$$Y_m = N_m \frac{Y_{m+1} + N_m \tanh u_m h_m}{N_m + Y_{m+1} \tanh u_m h_m}$$

$$\vdots$$

$$Y_{M-1} = N_{M-1} \left[\frac{1}{\tanh u_{M-1} h_{M-1}} \right] .$$

The reflection coefficient at the interface can be found from (4) once Y_1 is calculated using the expressions above.

The case of one-, two-, and three-layered media was considered for the computer study. It was assumed that the depths of these layers were identical and only the relative dielectric constants were taken to be the variable parameters.

The computation was started by first calculating the reflection coefficient $\rho^g(\kappa_m^g)$ for the actual medium for 50 different values of frequency ω_i such that $k_i = \omega_i\sqrt{\mu_0\varepsilon_0}$ varied from 1 to 2 in increments of .02. The reflection coefficient was calculated for a fixed angle of incidence $\theta = 45°$. The computed values of ρ_i^g were considered as simulations of the measured data. As indicated earlier, the performance index was defined as

$$F = \sum_{i=1}^{50} \left|\rho_i^g(\kappa_m^g,\omega_i,\theta) - \rho_i(\kappa_m,\omega_i,\theta)\right|^2$$

where κ_m's were the trial values of dielectric constants and were regarded here as the optimization parameters. It is obvious that if $\kappa_m^g = \kappa_m$, then $F = 0$, so a success criterion would be to minimize F to a value as close to zero as possible. The minimization scheme used in this section is due to Rosenbrock.[2] (See Appendix A for more detail). In this technique, the user provides in the main program a set of starting points with each point belonging to a specified interval. These starting points are taken to be the initial trial values of the unknown characteristics. The main program calls for a subroutine which calculates the reflection coefficient as a function of these trial values. The performance index F is calculated and its value recorded. Through a search algorithm, the main program tries to find trial values of unknown characteristics in the specified intervals such that F is minimized.

Some of the numerical results are presented in the following table. The geometries for which the computations were carried out are shown in Figures 2, 3, and 4.

Table 1. Numerical Results for a Single Layered Dielectric Slab

Layer Number	κ_m^g Actual	κ_m Numerical	Performance Index F
1	1.5	1.5011	$.41 \times 10^{-3}$

Table 2. Numerical Results for a Two-Layered Dielectric Slab

Layer Number	κ_m^g Actual	κ_m Numerical	Performance Index F
1	3.0	3.0039	$.21 \times 10^{-3}$
2	4.0	3.9965	

Table 3. Numerical Results for a Three-Layered Dielectric Slab

Layer Number	κ_m^g Actual	κ_m Numerical	Performance Index F
1	1.5	1.5052	$.42 \times 10^{-2}$
2	3.0	3.0586	
3	2.5	2.4565	

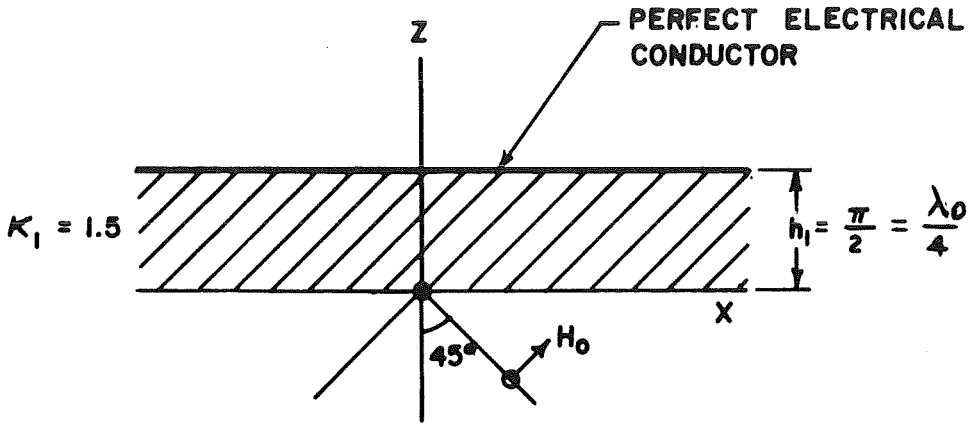

Figure 2. One-layered dielectric slab terminated by a perfect conductor.

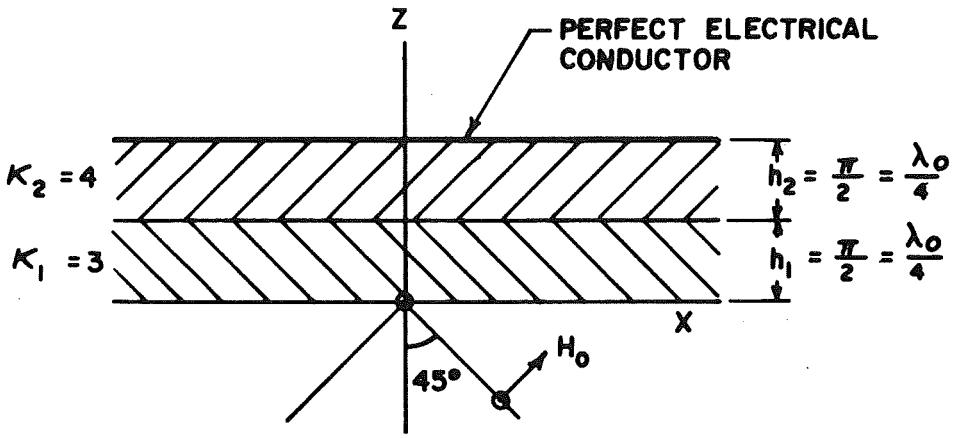

Figure 3. Two-layered dielectric slab terminated by a perfect conductor.

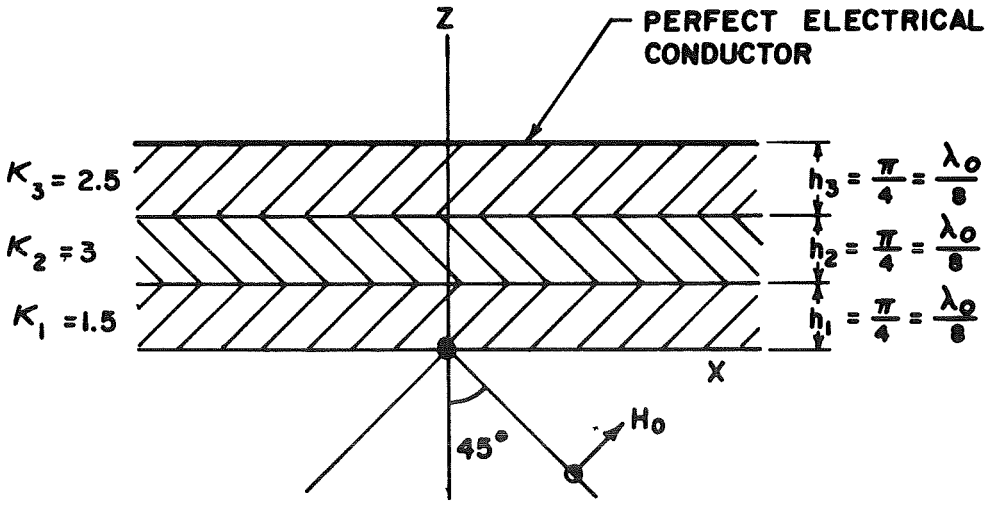

Figure 4. Three-layered dielectric slab terminated by a perfect conductor.

After determining the values of κ_m, the reflection coefficient was calculated from the numerically obtained values of κ_m and compared with the given values of the reflection coefficient. The comparison is illustrated in Table 4.

It is evident from the above table that the response of the inverted medium agrees quite favorably with the response of the actual medium. It might be useful to quote the time involved for the determination of parameters using the Rosenbrock's optimization technique. Typically, the execution time on the WATFOR compiler of IBM 360 was of the order of 10 seconds for the above cases.

Table 4. Comparison of Given Reflection Coefficient Data with Those Obtained by Using the Numerically Determined Dielectric Constant Parameters of the Three-Layered Medium

$k = (\varepsilon_0\mu_0)^{1/2}\omega$	Reflection Coefficient Calculated from Given Parameters		Reflection Coefficient Calculated Numerically	
	Real Part	Imaginary Part	Real Part	Imaginary Part
1.00	-.5343	.8452	-.5501	.8351
1.20	.5400	.8416	.5300	.8480
1.40	.9455	-.3255	.9467	-.3219
1.60	.7937	-.6083	.7951	-.6065
1.80	-.6751	-.7378	-.6789	-.7342
2.00	-.7282	0.6854	-.7255	0.6882

3. INVERSION OF CONTINUOUSLY VARYING MEDIA

In this chapter, we again consider the problem of remote probing in an inhomogeneous medium but for the more general case where the refraction index of the medium varies continuously as a function of depth, as opposed to discrete stratification, which was discussed in the previous section. The profile of the inhomogeneity may be described in terms of a function

$$K^2(z) = (\varepsilon_0\mu_0\omega^2)k^2(z) = k_0^2k^2(z) \tag{6}$$

where $\sigma(z)$ of the medium is assumed to be zero.

Once again, we will simulate the measured data by computing the scattered electric and magnetic fields at the interface $z = 0$, for obliquely incident plane waves and will try to find the characteristics of the medium so as to approximate the simulated data as closely as possible. To introduce the parameters to be optimized, we will characterize the medium as a polynomial of z, the depth dimension for the problem, viz.,

$$k^2(z) = a_0 + a_1z + a_2z^2 + \ldots + a_nz^n. \tag{7}$$

The problem then reduces to one of optimizing the coefficients a_i, $i=1, \ldots, n$. This will be carried out by two different numerical optimization schemes, one of which is Rosenbrock's technique discussed in Chapter 2, and the other is the conjugate gradients method due to Fletcher and Reeves[3]. (See Appendix B for more detail.) The basic difference between these two mothods is that Rosenbrock's technique requires only

the knowledge of the performance index function F with respect to the optimizing parameters, while the conjugate gradients method requires the knowledge of both the function F and its derivatives with respect to the optimizing parameters. Both methods accommodate arbitrary starting values for a_i.

Figure 5 illustrates the geometry of the problem which shows a plane wave incident at an oblique angle θ on a nonuniform dielectric with the dielectric constant varying only in the z direction. The dielectric medium is terminated at z = 1 by a perfect conductor.

Once again, as in the previous problem, we calculate the scattered wave amplitudes for a specified $k^2(z)$, and, using this information as simulated measured data, we try to invert the medium by adjusting the parameters describing $k^2(z)$ in terms of the polynomial such that the response of the trial medium agrees closely with that of the simulated data. It therefore brings us to the task of computing the reflection coefficient or scattered wave amplitudes due to a plane wave obliquely incident on a nonuniform medium. We discuss the solution of this problem as follows.

We may write the E_y of the free space in terms of the standard representation[1]

$$E_y = A[e^{-u_0 z} + \rho(\beta) e^{u_0 z}] e^{-j\beta x}$$

where $\beta = k_0 \sin\theta$, $u_0 = (\beta^2 - k_0^2)^{1/2} = jk_0 \cos\theta$, $k_0 = (\mu_0 \varepsilon_0 \omega^2)^{1/2}$, and $\rho(\beta)$ is the reflection coefficient. The nonuniform medium has μ_0, $\varepsilon(z)$, as electrical constants. Thus

$$K^2(z) = k_0^2 k^2(z) = -j\omega\mu_0(j\omega\varepsilon(z)). \qquad 0 < z < 1$$

From Maxwell-s equations, we have

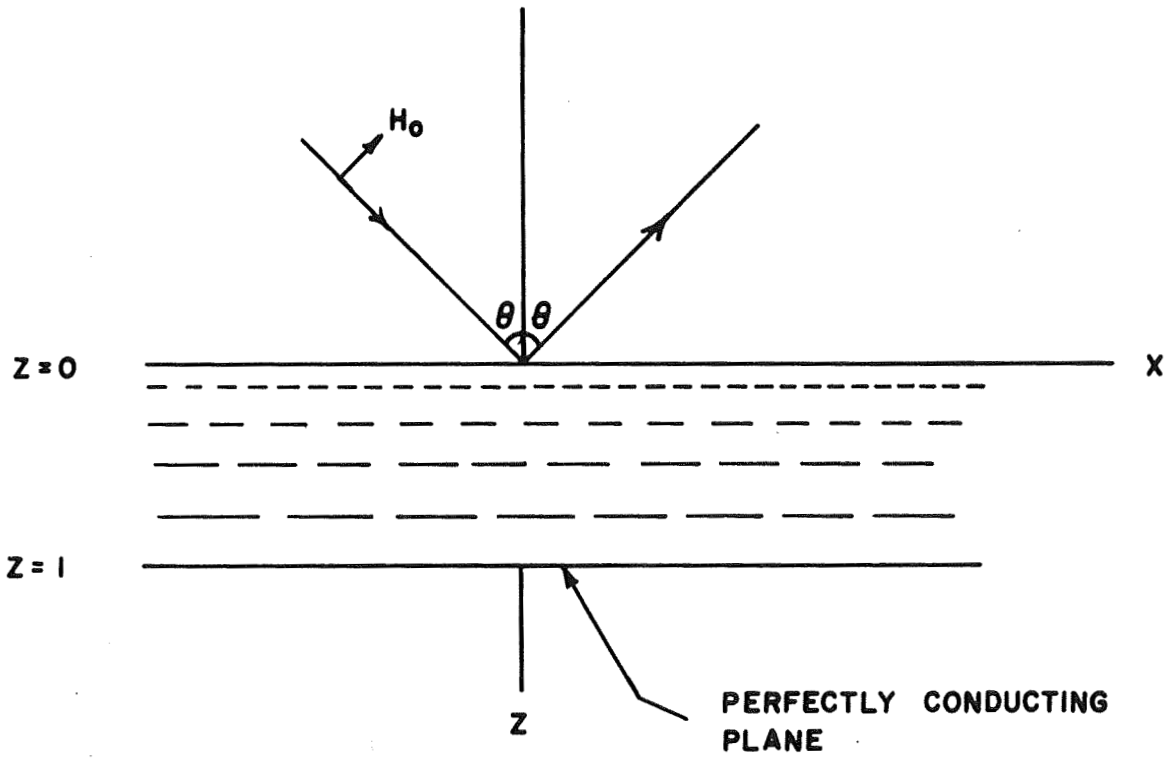

Figure 5. Wave incident at an angle θ on a continuously varying nonuniform medium terminated by a perfect conductor.

$$j\omega\mu_0 H_x = \frac{\partial E_y}{\partial z}$$

$$j\omega\mu_0 H_z = j\beta E_y$$

$$j\omega\varepsilon(z) = \frac{\partial H_x}{\partial z} + j\beta H_z .$$

Combining the above equations, we get

$$\frac{d^2E_y}{\partial z^2} + [K^2(z)-\beta^2]E_y = 0 \qquad 0 < z < 1 \qquad (8)$$

$$\frac{d^2E_y}{dz^2} + k_0^2[k^2(z)-\sin^2\theta]E_y = 0 \qquad (9)$$

where $E_y = 0$ at $z = 1$.

An exact solution of the above equation is not possible except for a very special class of profiles such as exponentials. We will therefore solve Equation (9) numerically using the Runge-Kutta[4] technique, which requires the inversion of the second-order differential equation into two coupled first-order equations with given initial values. This is accomplished by setting

$$G = \frac{dE_y}{dz} \propto H_x . \qquad (10)$$

Substituting G in Equation (9), we get

$$\frac{dG}{dz} + k_0^2[k^2(z)-\sin^2\theta]E_y = 0. \qquad (11)$$

Equations (10) and (11) can now be solved for E_y and G using the Runge-Kutta method in conjunction with the boundary condition that $E_y = 0$ and

$G = 1$ at $z = 1$. The latter condition is not restrictive in the sense that it is a normalizing condition which sets the amplitude of the incident plane wave.

The next step was the use of this algorithm as a subroutine and the transformation of the inversion problem into a parameter optimization problem. The starting point was the calculation of the response of a known profile. The Runge-Kutta routine was employed for calculating the amplitudes of scattered electric and magnetic fields $E_g(\theta_i,\omega_m,k_g^2(z))$, $G_g(\theta_i,\omega_m,k_g^2(z))$ at $z = 0$ for several angles of incidence θ_i and for frequencies ω_m. $k_g^2(z)$ refers to the given profile. The above results were stored in an array to simulate the measured data. The next step was the consideration of a trial profile $k^2(z)$ as given by Equation (7) and the adjustment of the parameters a_j, $j = 1, \ldots, n$, describing this medium such that its response $E(\theta_i,\omega_m,k^2(z))$, $G(\theta_i,\omega_m,k^2(k))$ approximated E_g and G_g. Recall that $a_j (j=1, \ldots, n)$ are the coefficients of the polynomial expansion for $k^2(z)$.

The performance index F was chosen to be

$$F = \sum_{i,m}^{N} [E_g(\theta_i,\omega_m,k_g^2(z))-E(\theta_i,\omega_m,k^2(z))]^2$$

$$+ [G_g(\theta_i,\omega_m,k_g^2(z))-G(\theta_i,\omega_m,k^2(z))]^2 \qquad (12)$$

where $k^2(z)$ is, in turn, a function of a_j, $j = 1, \ldots, n$.

The function F was next minimized using Rosenbrock's method to yield the optimum values of a_j. It is obvious that $F = 0$ in the event $k_g^2(z)=k^2(z)$.

The second method, the so-called conjugate gradients method due to Fletcher and Reeves, is somewhat more involved as compared to Rosenbrock's

scheme, because it requires the evaluation of grad(F) with respect to a_j, $j = 1, \ldots, n$ in addition to the function F itself. Since F was calculated using numerical values for E and G obtained from the Runge-Kutta method, it was necessary to resort to numerical differentiation schemes to evaluate $\frac{\partial F}{\partial a_j}$. This was done as follows:

$$\text{grad}\ (F) = -2 \begin{bmatrix} \sum_{i=1}^{N} [E_g(\theta_i,\omega_m,k_g^2(z)) - E(\theta_i,\omega_m,k^2(z))] \frac{\partial E}{\partial a_1} \\ + [G_g(\theta_i,\omega_m,k_g^2(z)) - G(\theta_i,\omega_m,k^2(z))] \frac{\partial G}{\partial a_1} \\ \vdots \\ \sum_{i=1}^{N} [E_g(\theta_i,\omega_m,k_g^2(z)) - E(\theta_i,\omega_m,k^2(z))] \frac{\partial E}{\partial a_n} \\ + [G_g(\theta_i,\omega_m,k_g^2(z)) - G(\theta_i,\omega_m,k^2(z))] \frac{\partial G}{\partial a_n} \end{bmatrix} \tag{13}$$

where grad (F) is a column vector.

$$\frac{\partial E(a_1, \ldots, a_j, \ldots, a_n)}{\partial a_j} \approx \frac{E(a_1, \ldots, a_j+\Delta a, \ldots, a_n) - E(a_1, \ldots, a_j, \ldots, a_n)}{\Delta a}$$

$$j = 1, \ldots, n \tag{14}$$

A similar equation can be written for $\frac{\partial G(a_1, \ldots, a_j, \ldots, a_n)}{\partial a_j}$. Since both $E(a_1, \ldots, a_j, \ldots, a_n)$ and $E(a_1, \ldots, a_j+\Delta a, \ldots, a_n)$ were calculated by the Runge-Kutta method, it is clear that in the conjugate-gradients method, the computer has to go through this integration subroutine n times more than in Rosenbrock's method for each iteration step in the minimization process of F. This obviously makes the conjugate

gradients method more time consuming in comparison to Rosenbrock's scheme. However, as the numerical results show, the conjugate gradients method is relatively superior in terms of the accuracies obtainable for the inversion problem. To illustrate this point, the results of the two methods will be represented shortly.

We started out by choosing n, the highest degree of the polynomial, to be 4. Later on, an attempt was made to increase the accuracy by increasing n from 4 to 6. However, it was found that the results were not significantly affected by this change. In most cases, the angular frequency was fixed and only the incident angle θ_i was varied. θ varied from 0° to 90° in 10 degree increments. We also investigated the case in which the incident angle was held constant and the frequency was varied. However, this did not improve the results. It was also found that with increasing the frequency, the accuracy was diminished. The frequency that yielded best results was found to vary in the range $\left(\frac{.5}{\mu_0\varepsilon_0}\right)^{1/2} < \omega < \left(\frac{2.5}{\mu_0\varepsilon_0}\right)^{1/2}$. This fact was demonstrated for profiles which have maxima or minima in the range $0 < z < 1$.

We will now present some results for several different profiles to illustrate the numerical behavior of the optimization techniques.

The first profile considered was $k^2(z) = e^{2z}$. For this particular profile, an analytical solution is available and it was used to assess the accuracy of the Runge-Kutta method. The analytical solution is derived as follows[1]:

$$\frac{d^2E}{dz^2} + k_0^2[k^2(z)-\sin^2\theta]E = 0 \tag{15}$$

In general, for $k^2(z) = e^{\gamma z}$, set

$$v = \frac{2}{\gamma} e^{z/2} k_0$$

$$v^2 \frac{d^2E}{dv^2} + v \frac{dE}{dv} + (v^2 - n^2)E = 0 \tag{16}$$

where

$$n^2 = k_0^2 \sin^2\theta \left(\frac{2}{\gamma}\right)^2.$$

Equation (16) is Bessel's equation with the general solution given below:

$$E = AJ_n(v) + BN_n(v).$$

For simplicity, we set $k_0^2 = 1$ and γ was taken to be 2. Applying the boundary condition

$$E = 0 \text{ and } \frac{dE}{dz} = 1 \text{ at } z = 1$$

at $z = 1$, $v = e$, where $e = 2.71828...$

$$AJ_n(e) + BN_n(e) = 0$$

$$A = -\frac{BN_n(e)}{J_n(e)}$$

$$E = B\left[\frac{-N_n(e)}{J_n(e)} J_n(v) + N_n(v)\right] \tag{17}$$

$$\frac{dE}{dz} = 1 = B\left[-\frac{N_n(e)}{J_n(e)} \frac{d}{dz} J_n(v) + \frac{d}{dz} N_n(v)\right]_{z=1} \tag{18}$$

$$\frac{dE}{dz} = G = B\left[-\frac{N_n(e)}{J_n(e)} \frac{d}{dz} J_n(v) + \frac{d}{dz} N_n(v)\right]. \tag{19}$$

The analytical solution is completed by finding B from (18); the result is then used in (17) and (19) to complete the solution of E and G.

The values of E and $G = \frac{dE}{dz}$ obtained by the Runge-Kutta method were compared with the analytical results and were found to agree up to 5 significant digits. For the profile e^{2z}, we added 2 to 10 per cent random noise to the simulated data. The deduced profile was satisfactory as shown in Figure 8. The results of the introduction of noise can be seen in Table 6. Note that the accuracy criterion in the Runge Kutta method was set at .0001. The profiles considered are as follows:

i) $k^2(z) = e^{2z}$;

ii) $k^2(z) = e^{.5z}$;

iii) $k^2(z) = 1 + .5z$

iv) $k^2(z) = 1 + z \sin(2\pi z)$;

v) $k^2(z) = 1 + \sin(\pi z)$.

It is evident from Tables 5, 6, 7, 8, 9, and 10 that the response of the inverted medium agrees quite well with the response of the actual medium. Figures 6 and 7, with a profile of e^{2z}, correspond to Table 5; figure 8, profile e^{2z} and with noise introduced, corresponds to Table 6; figures 9 and 10, profile $e^{+.5z}$, correspond to Table 7; figures 11 and 12, with a profile of $1 + .5z$, correspond to Table 8; figures 13 and 14, profile $1 + z \sin 2\pi z$, correspond to Table 9; and figure 15, profile $1 + \sin \pi z$, corresponds to Table 10.

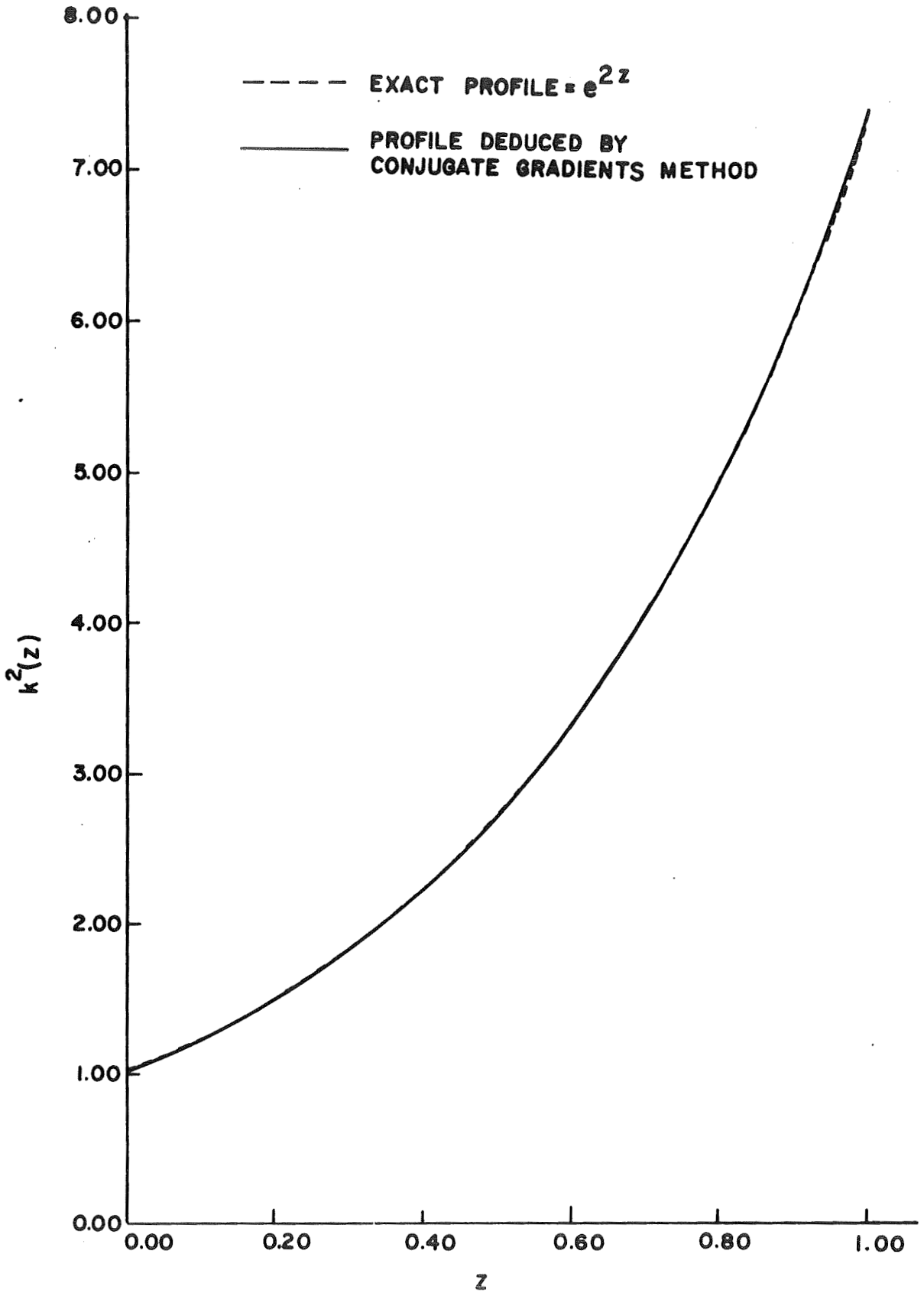

Figure 6. Profile of dielectric constant $k^2(z) = e^{2z}$ for a slab terminated by a perfect conductor at $z = 1$. Conjugate gradients method.

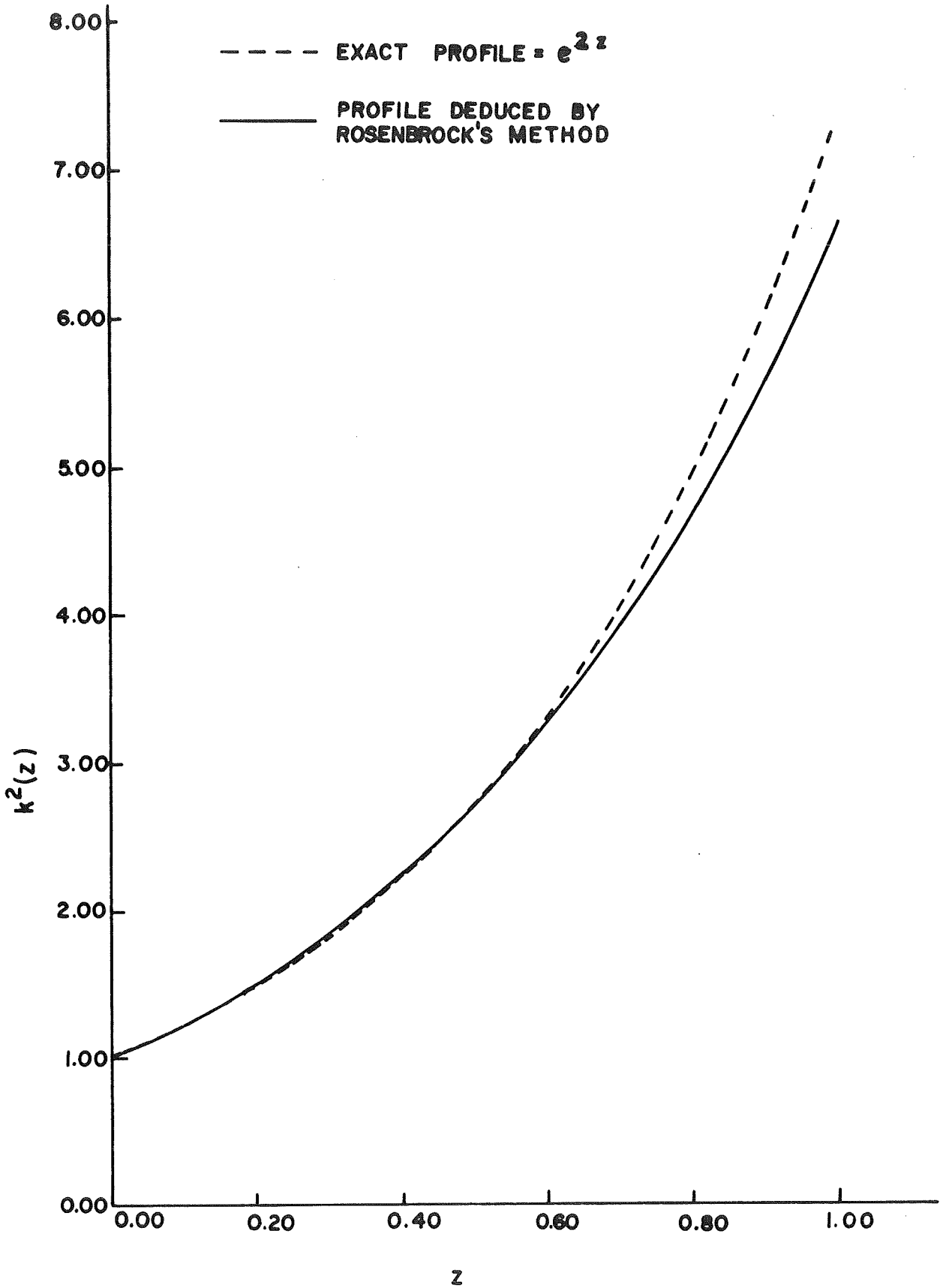

Figure 7. Profile of dielectric constant $k^2(z) = e^{2z}$ for a slab terminated by a perfect conductor at z = 1. Rosenbrock's method.

Table 5

Comparison of the Scattered Electric and Magnetic Field Amplitudes for the Exact and Inverted Profiles. $k_0 = 1$.

Incident angle in degrees	Amplitude of Scattered E Field			$\frac{\partial E}{\partial z} \propto$ Amplitudes of the Scattered H Field		
	Exact	Rosenbrock's Method	Conjugate Gradients Method	Exact	Rosenbrock's Method	Conjugate Gradients Method
0	-.5692	-.5748	-.5693	.1308	.1293	.1313
30	-.5998	-.6057	-.5999	.2108	.2099	.2114
60	-.6637	-.6699	-.6638	.3831	.3835	.3837
90	-.6969	-.7034	-.6970	.4756	.4766	.4761

Exact profile $k^2(z) = e^{2z}$

	Rosenbrock's Method	Conjugate Gradients Method
Inverted Profile	$k^2(z) = 1.0 + 2.16z + 2.16z^2 + .58z^3 + .726z^4$	$k^2(z) = 1.0 + 2.07z - 1.64z^2 + 1.42z^3 + 1.3z^4$
Performance Index	$F = .89 \times 10^{-5}$	$F = .136 \times 10^{-8}$
Execution time on FORTRAN Compiler	40.11 sec.	35.15 sec.

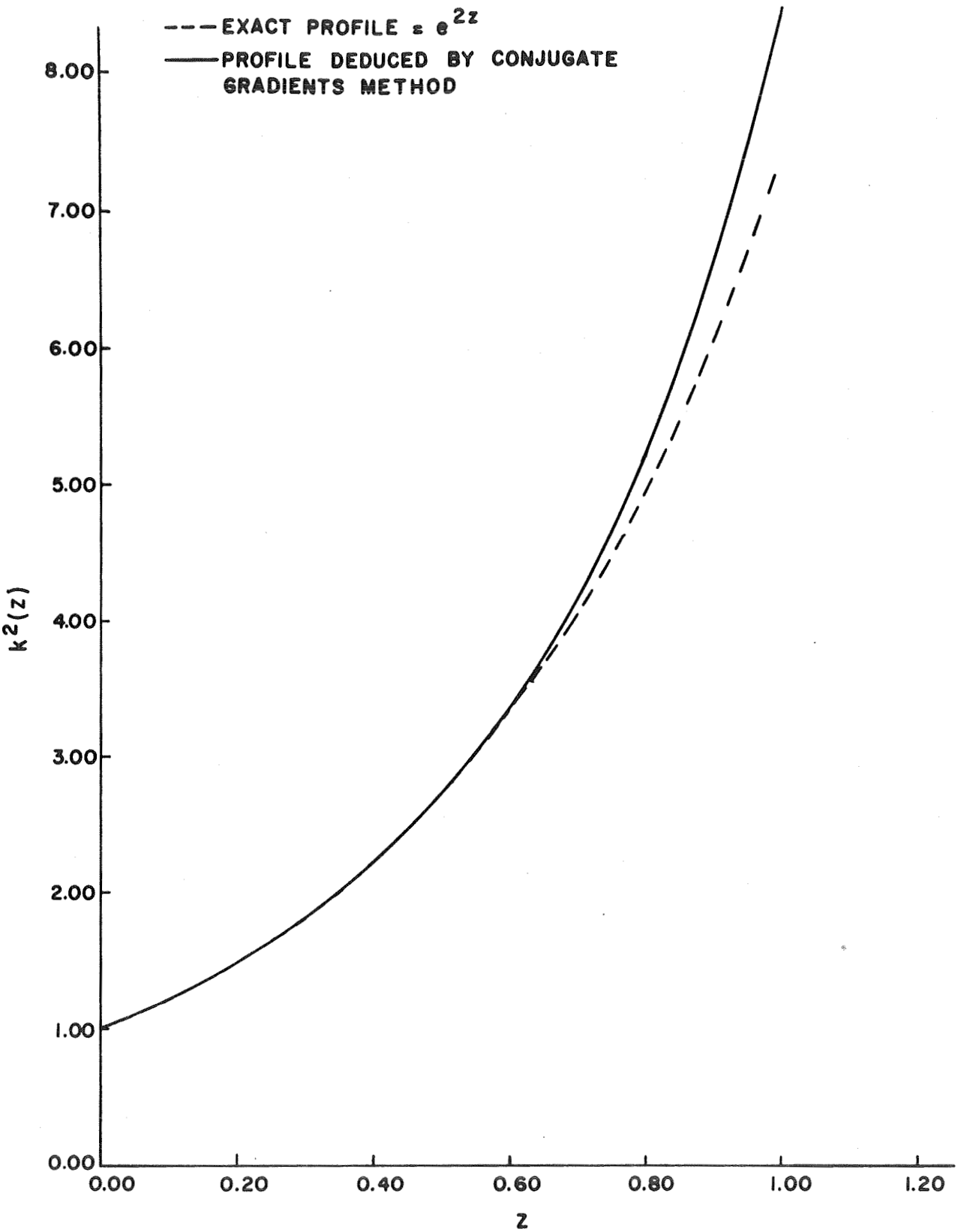

Figure 8. Profile of dielectric constant $k^2(z) = e^{2z}$ for a slab terminated by a perfect conductor at $z = 1$. Random noise was added to the simulated data.

Table 6

Comparison of the Scattered Electric and Magnetic Field Amplitudes for the Exact and Inverted Profiles Adding Random Noise to Simulated Data. $k_0 = 1.$

Incident angle in degrees	Amplitude of Scattered E Field		$\frac{\partial E}{\partial z} \propto$ Amplitude of Scattered H Field	
	Exact	Conjugate Gradients Method	Exact	Conjugate Gradients Method
0	-.5692	-.5584	.1307	.1209
30	-.5999	-.5887	.2108	.1998
60	-.6638	-.6518	.3832	.3696
90	-.6970	-.6847	.4757	.4607

Exact Profile $k^2(z) = e^{2z}$

	Conjugate Gradients Method
Inverted Profile	$k^2(z) = 1. + 2.11z + 1.68z^2 + 1.25z^3 + 1.02z^4 + .771z^5 + .594z^6$
Performance Index	$F = .234 \times 10^{-1}$
Execution time on FORTRAN Compiler	133.71 sec.

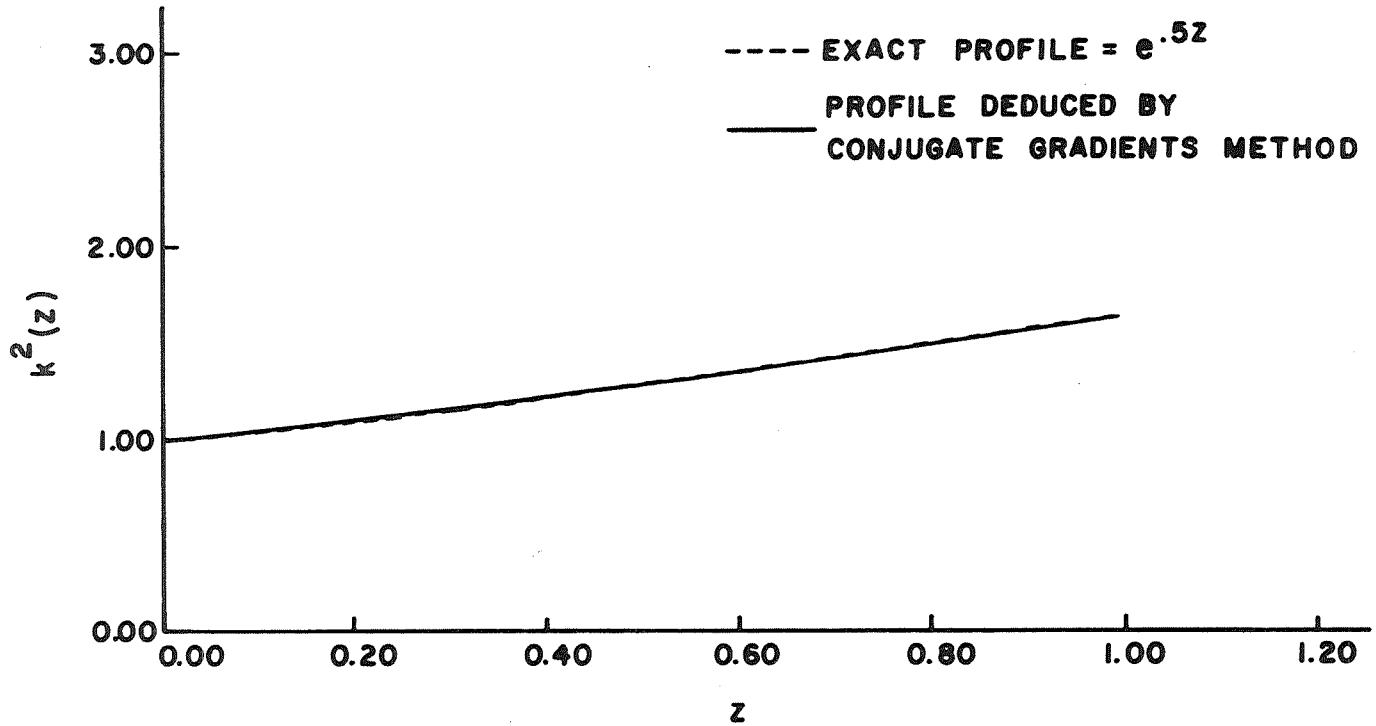

Figure 9. Profile of dielectric constant $k^2(z) = e^{.5z}$ for a slab terminated by a perfect conductor at $z = 1$. Conjugate gradients method.

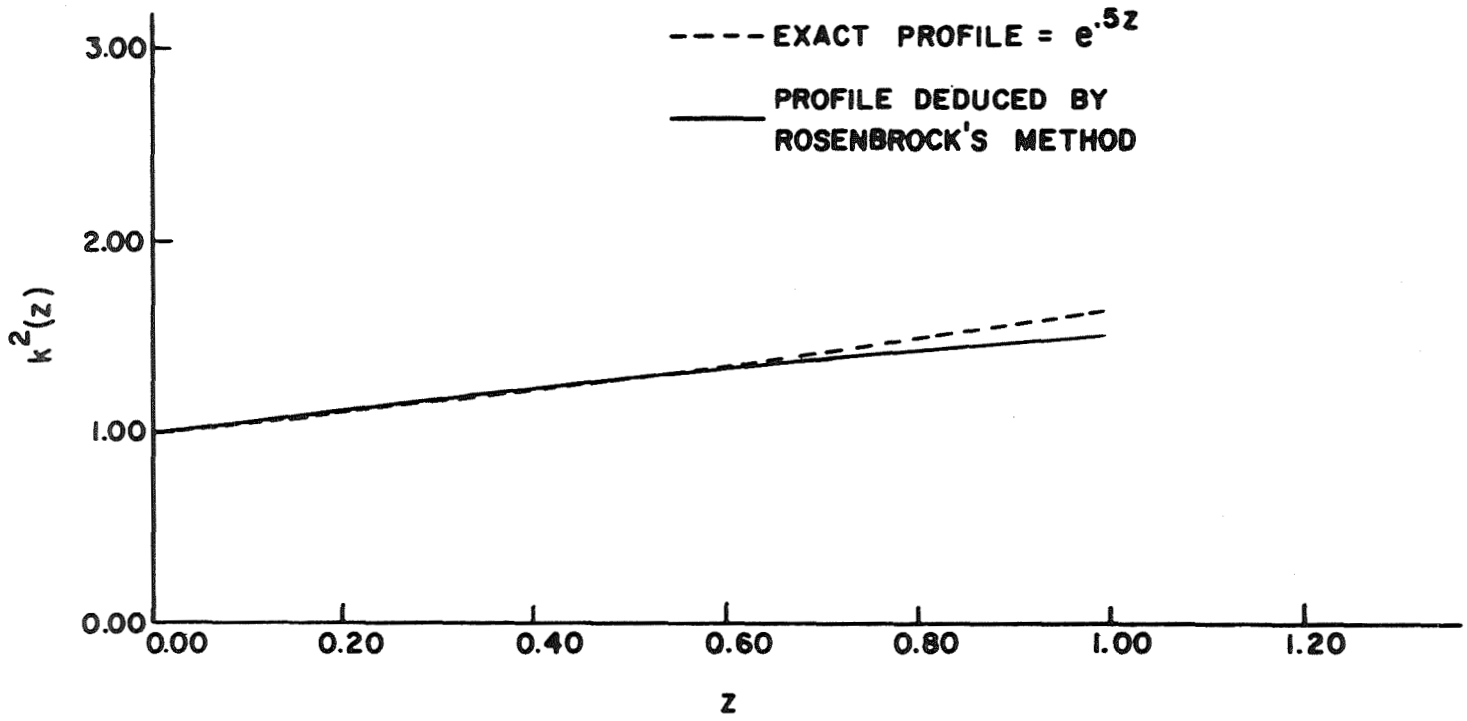

Figure 10. Profile of dielectric constant $k^2(z) = e^{.5z}$ for a slab terminated by a perfect conductor at $z = 1$. Rosenbrock's method.

Table 7

Comparison of the Scattered Electric and Magnetic Field Amplitudes for the Exact and Inverted Profiles. $k_0 = 1$.

Incident angle in degrees	Amplitude of Scattered E Field			$\frac{\partial E}{\partial z} \propto$ Amplitude of Scattered H Field		
	Given	Rosenbrock's Method	Conjugate Gradients Method	Given	Rosenbrock's Method	Conjugate Gradients Method
0	-.7981	-.7999	-.7981	.4654	.4650	.4653
30	-.8351	-.8370	-.8351	.5686	.5683	.5686
60	-.9120	-.9140	-.9120	.7892	.7893	.7892
90	-.9520	-.9540	-.9520	.9069	.9062	.9069

Exact Profile $k^2(z) = e^{+.5z}$

	Rosenbrock's Method	Conjugate Gradients Method
Inverted Profile	$k^2(z) = 1.0 + .591z - .082z^3$	$k^2(z) = 1 + .495z + .134z^2 + .337z^3 + .557z^4 - .162z^5 - .163z^6$
Performance Index	$F = .67 \times 10^{-6}$	$F = .271 \times 10^{-9}$
Time Consumed using FORTRAN Compiler	113.93 sec.	62.54 sec.

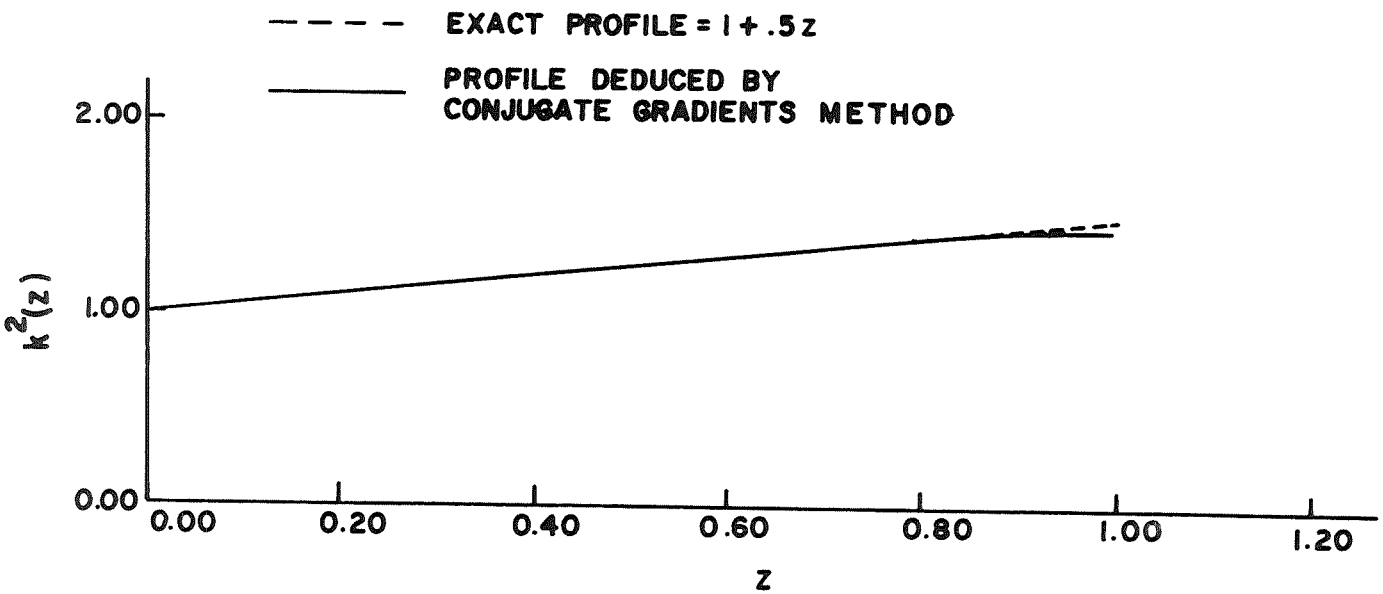

Figure 11. Profile of dielectric constant $k^2(z) = 1 + .5z$ for a slab terminated by a perfect conductor at $z = 1$. Conjugate gradients method.

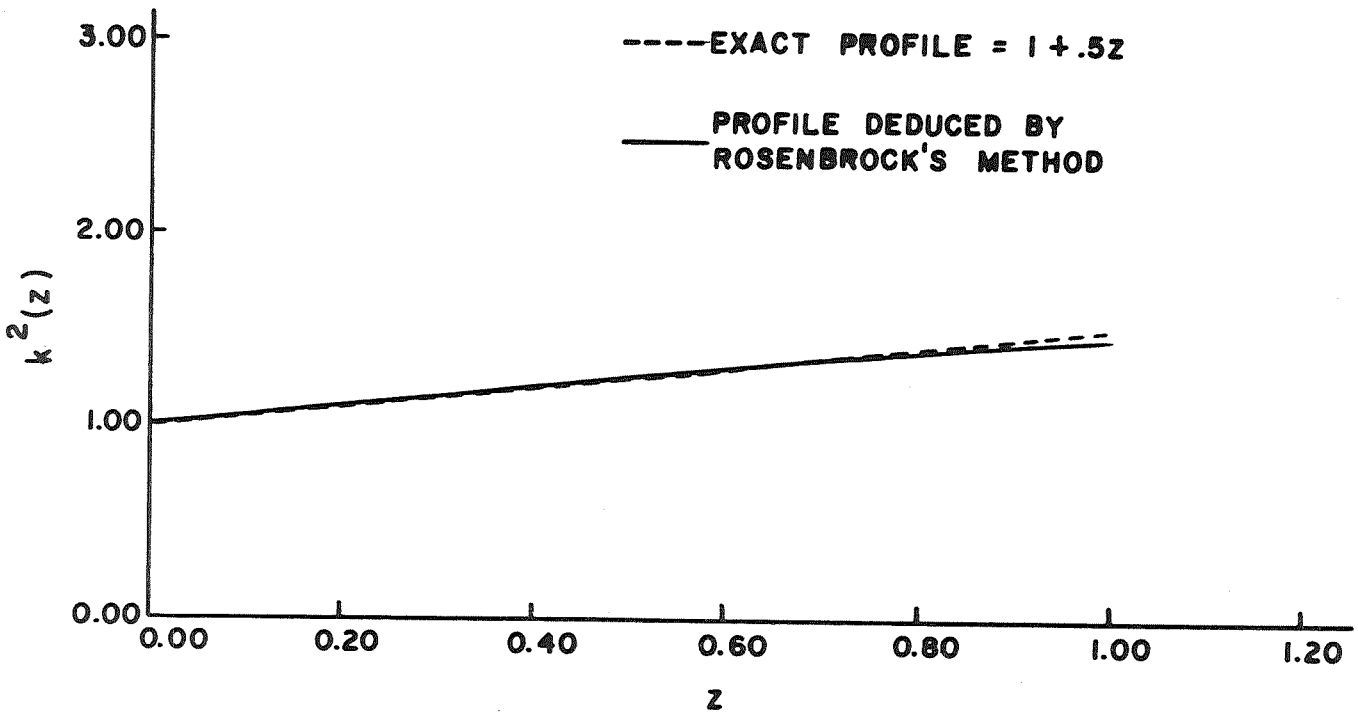

Figure 12. Profile of dielectric constant $k^2(z) = 1 + .5z$ for a slab terminated by a perfect conductor at $z = 1$. Rosenbrock's method.

Table 8

Comparison of the Scattered Electric and Magnetic Field Amplitudes for the Exact and Inverted Profiles. $k_0 = 1.$

Incident angle in degrees	Amplitude of Scattered E Field			$\frac{\partial E}{\partial z} \propto$ Amplitude of Scattered H Field		
	Given	Rosenbrock's Method	Conjugate Gradients Method	Given	Rosenbrock's Method	Conjugate Gradients Method
0	-.8043	-.8047	-.8042	.4740	.4736	.4739
30	-.8414	-.8418	-.8414	.5778	.5774	.5778
60	-.9187	-.9191	-.9187	.7997	.7994	.7997
90	-.9588	-.9592	-.9588	.9180	.9178	.9180

Exact Profile $k^2(z) = 1. + .5z$

	Rosenbrock's Method	Conjugate Gradients Method
Inverted Profile	$k^2(x) = 1. + .523z - .07z^3$	$k^2(z) = 1.0 + .474z - .088z^2 - .006z^3 - .0342z^4 - .04z^5 - .04z^6$
Performance Index	$F = .29 \times 10^{-5}$	$F = .49 \times 10^{-8}$
Time Consumed using FORTRAN Compiler	31.49 sec.	100.12 sec.

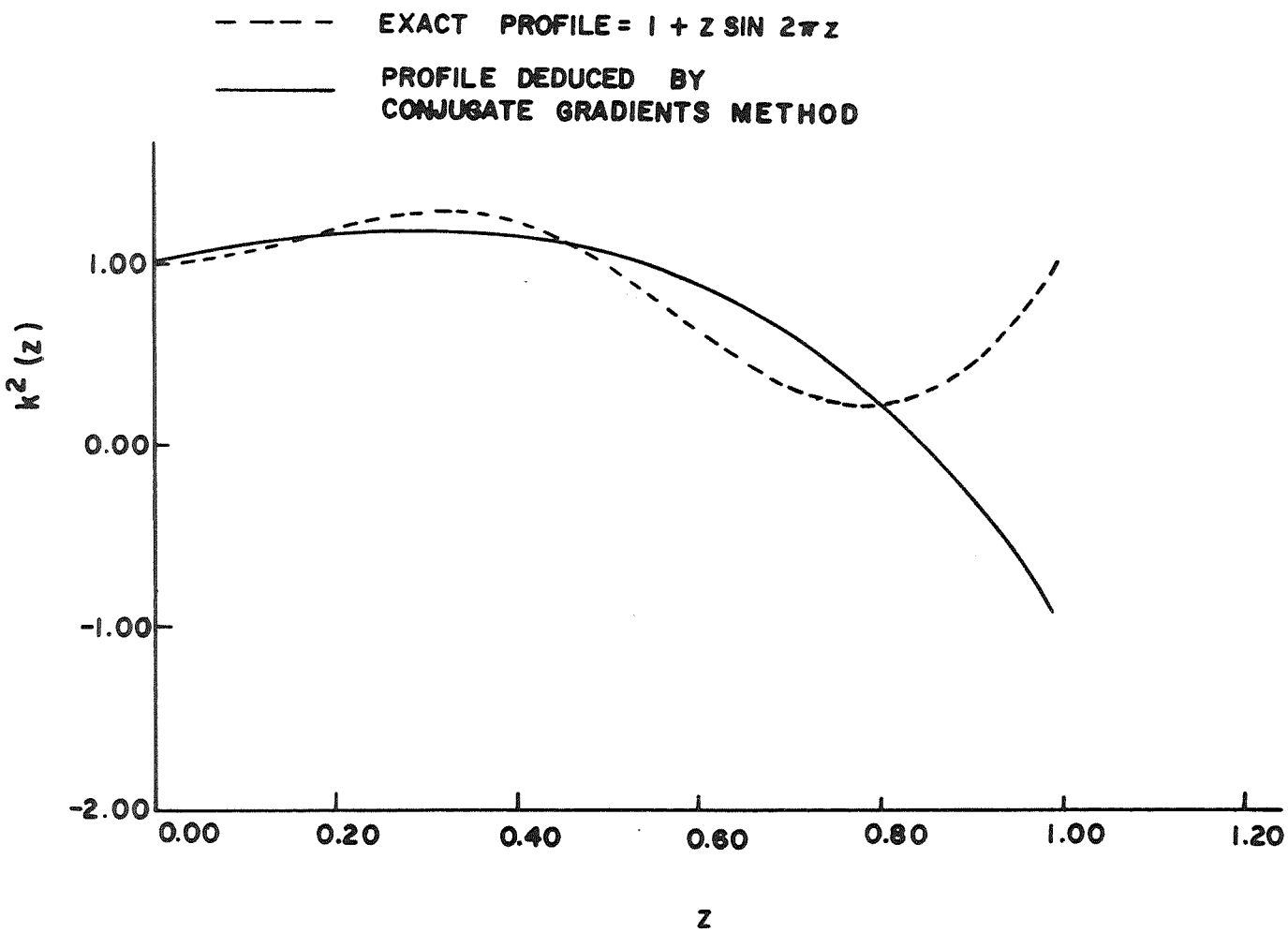

Figure 13. Profile of dielectric constant $k^2(z) = 1 + z \sin 2\pi z$ for a slab terminated by a perfect conductor at $z = 1$. Conjugate gradients method.

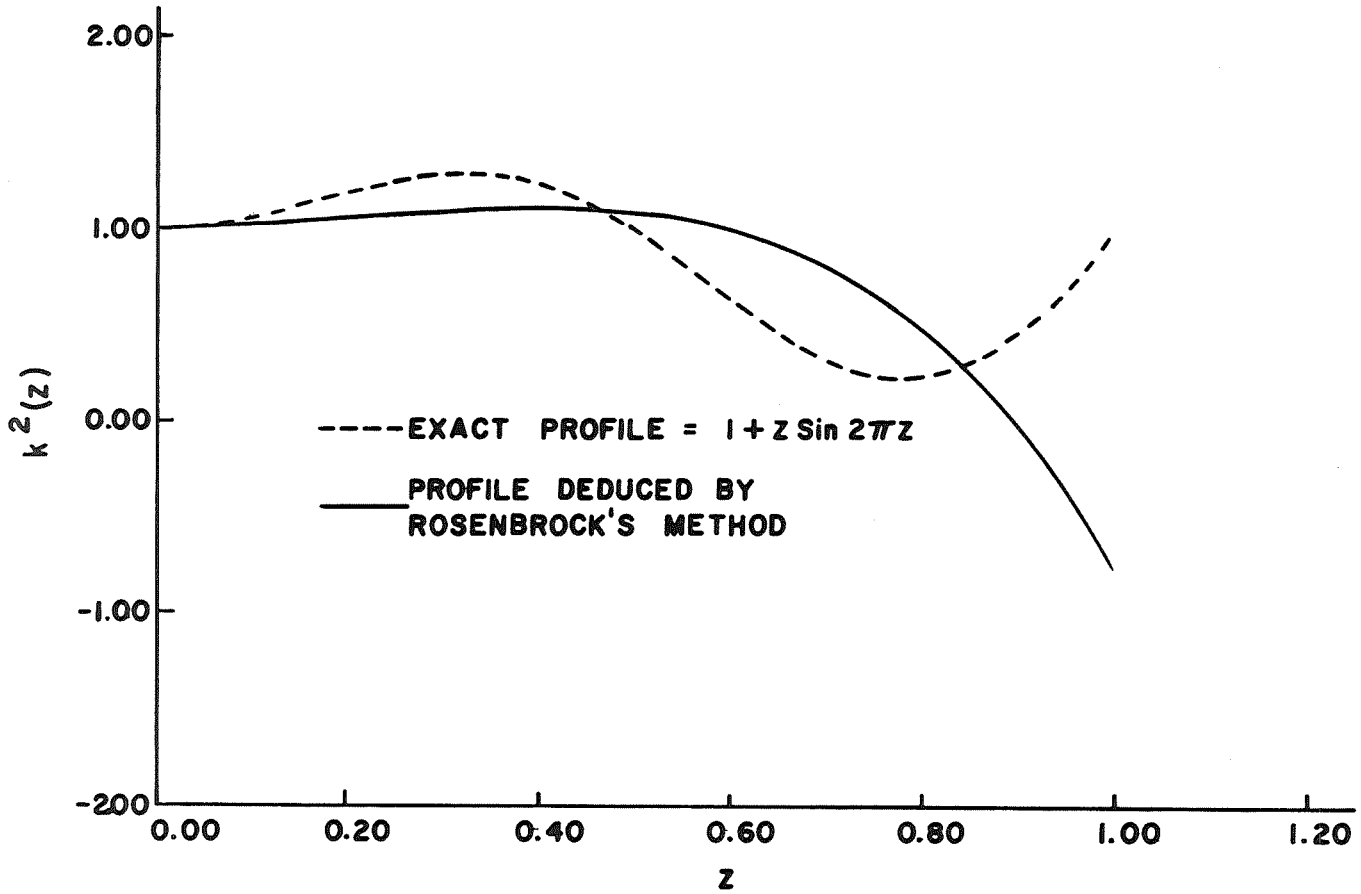

Figure 14. Profile of dielectric constant $k^2(z) = 1 + z \sin 2\pi z$ for a slab terminated by a perfect conductor at $z = 1$. Rosenbrock's method.

Table 9

Comparison of the Scattered Electric and Magnetic Field Amplitudes for the Exact and Inverted Profiles. $k_0 = 1.0$.

Incident angle in degrees	Amplitude of Scattered E Field			$\frac{\partial E}{\partial z} \propto$ Amplitude of the Scattered H Field		
	Given	Rosenbrock's Method	Conjugate Gradients Method	Given	Rosenbrock's Method	Conjugate Gradients Method
0	-.8630	-.8552	-.8627	.5317	.5382	.5313
30	-.9017	-.8938	-.9015	.6410	.6472	.6408
60	-.9822	-.9741	-.9823	.8744	.8800	.8746
90	1-.024	-1.016	-1.024	.9988	1.004	.9992

Exact Profile $k^2(z) = 1. + z \sin 2\pi z$

	Rosenbrock's Method	Conjugate Gradients Method
Inverted Profile	$k^2(z) = 1. + .158z + .962z^2 - .894z^3 - 1.98z^4$	$k^2(z) = 1. + 1.04z - 1.08z^2 - 1.1z^3 - .83z^4$
Performance Index	$F = .99 \times 10^{-3}$	$F = .94 \times 10^{-6}$
Time Consumed using FORTRAN Compiler	70.21 sec.	85.55 sec.

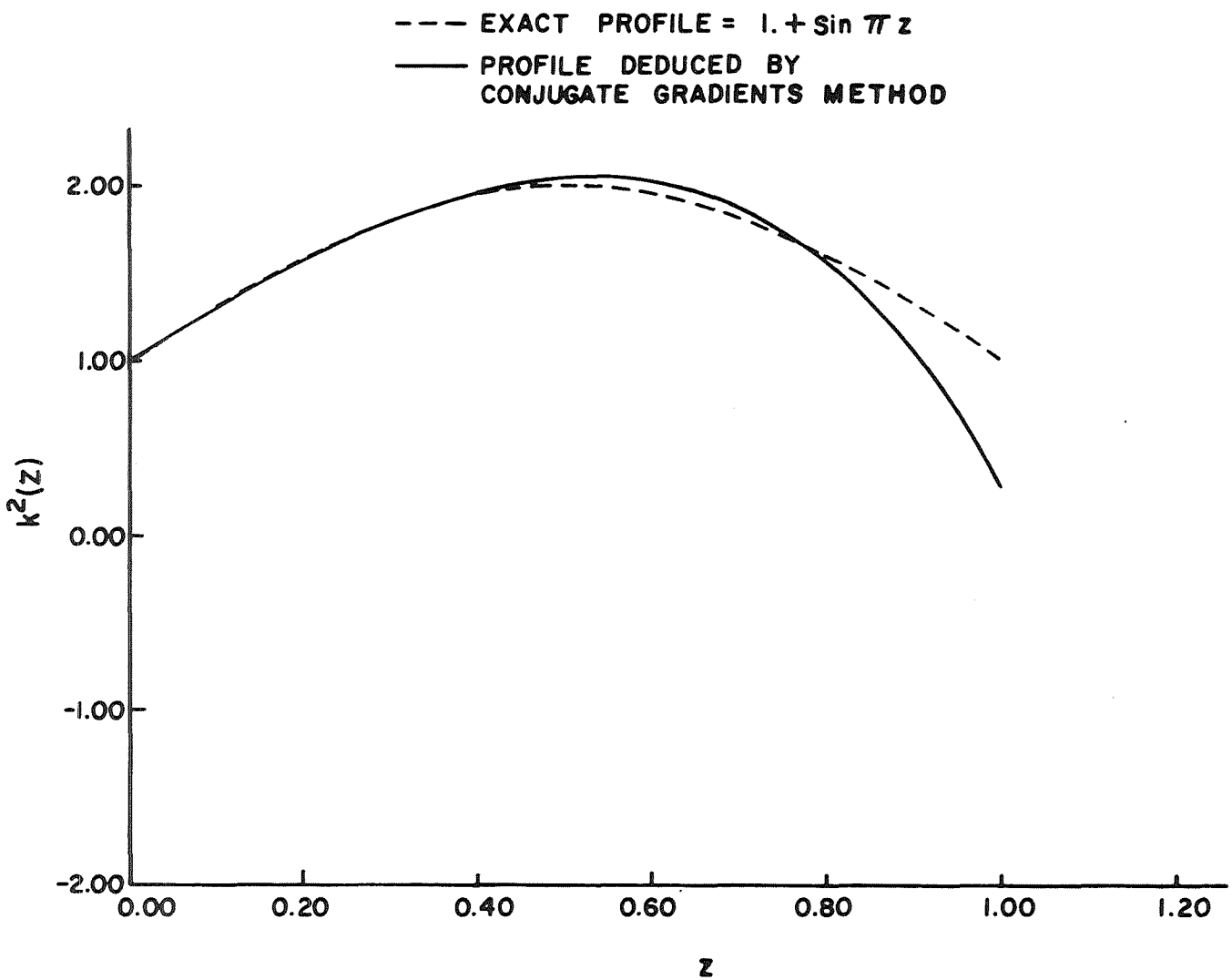

Figure 15. Profile of dielectric constant $k^2(z) = 1 + \sin \pi z$ for a slab terminated by a perfect conductor at $z = 1$. Conjugate gradients method.

Table 10

Comparison of the Scattered Electric and Magnetic Field Amplitudes for the Exact and Inverted Profiles. $k_0 = 1.0$.

Incident angle in degrees	Amplitude of Scattered E Field		$\frac{\partial E}{\partial z} \propto$ Amplitude of Scattered H Field	
	Given	Conjugate Gradients Method	Given	Conjugate Gradients Method
0	-.7283	-.7282	.2864	.2861
30	-.7636	-.7635	.3821	.3820
60	-.8371	-.8371	.5874	.5876
90	-.8753	-.8754	.6971	.6974

Exact Profile = $1 + \sin \pi z$

	Conjugate Gradients Method
Inverted Profile	$k^2(z) = 1. + 3.06z - .823z^2 - 1.51z^3 - 1.47z^4$
Performance Index	$F = .531 \times 10^{-6}$
Time Consumed using FORTRAN Compiler	98.5 sec.

4. INVERSION OF CIRCULARLY STRATIFIED MEDIA

The problem in this chapter is basically the same as the problem encountered in Chapters 2 and 3, except that a different model is considered. Here again, we are concerned about the possibility of determining the characteristics of a medium having some knowledge about the scattered properties of the structure. The procedure used is exactly that of Chapters 2 and 3 and will not be repeated here.

Our model is a layered dielectric cylinder illuminated by a plane wave. Only one- and two-layered dielectric cylinders as shown in Figures 16 and 17 were considered. To simulate the required initial data, the problem was formulated analytically for some known parameters instead of the unknown characteristics of the medium. The Fourier coefficients of the scattered field were taken as the initial data for simplicity. Once again, we would attempt to determine these known parameters by the numerical optimization techniques.

We proceed by formulating the problem of a z polarized TM wave incident on a one-layered dielectric cylinder (Figure 16) with electrical constants ε_d, μ_o, and $\sigma = 0$. The incident wave can be written as[5]

$$E_z^i = E_0 e^{-jkx} = E_0 e^{-jk\rho \cos \phi}, \quad k^2 = \mu_0 \varepsilon_0 \omega^2$$

which can be expressed in terms of cylindrical waves

$$e^{-jk\rho \cos \phi} = \sum_{n=-\infty}^{\infty} A_n J_n(k\rho) e^{jn\phi}$$

with A_n to be determined. Multiply each side by $e^{-jm\phi}$ and integrate from

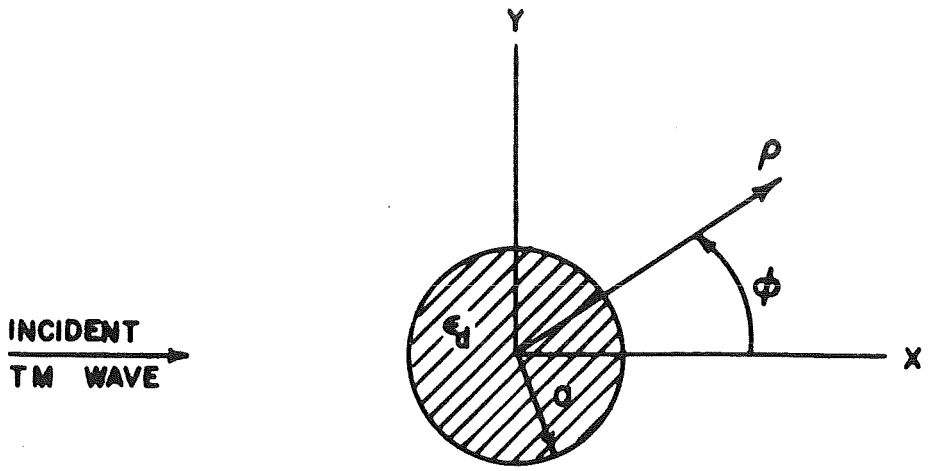

Figure 16. A plane wave incident upon a uniform dielectric cylinder.

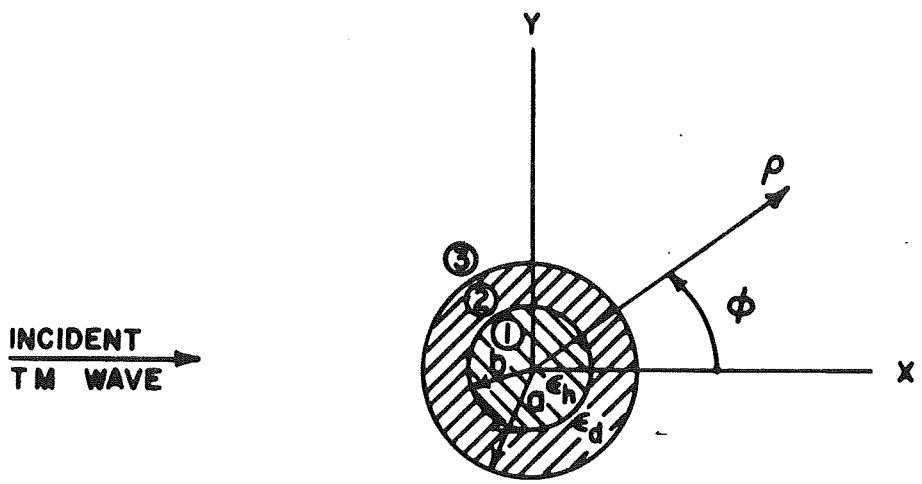

Figure 17. A plane wave incident upon a two-layered dielectric cylinder.

0 to 2π on ϕ. This gives $A_m = j^{-m}$, so

$$E_z^i = E_0 \sum_{n=-\infty}^{\infty} j^{-n} J_n(k\rho) e^{jn\phi}.$$

To represent the outward traveling wave, the scattered field must be of the form

$$E_z^s = E_0 \sum_{n=-\infty}^{\infty} j^{-n} a_n H_n^{(2)}(k\rho) e^{jn\phi}$$

where $H_n^{(2)}(k\rho)$ is the Hankel function of the second kind

$$E_z^0 = E_z^i + E_z^s \quad \rho \geq a$$

$$E_z^0 = E_0 \sum_{n=-\infty}^{\infty} j^{-n} [J_n(k\rho) + a_n H_n^{(2)}(k\rho)] e^{jn\phi} \quad \rho \geq a$$

$$E_z^{in} = E_0 \sum_{-\infty}^{\infty} j^{-n} C_n J_n(k_d \rho) e^{jn\phi} \quad k_d^2 = \varepsilon_d \mu_0 \omega^2 \quad \rho \geq a.$$

a_n and C_n are, in general, complex constants. For the boundary conditions, we have

$$H_\phi^0 = H_\phi^{in} \text{ at } \rho = a$$

$$E_z^0 = E_z^{in} \text{ at } \rho = a$$

$$H_\phi = \frac{\hat{y}}{k^2} \frac{\partial E_z}{\partial \rho}, \quad \hat{y} = j\omega\varepsilon$$

$$H_\phi^0 = \frac{j\omega\varepsilon_0}{k^2}\frac{\partial}{\partial\rho}\{E_0 \sum_{n=-\infty}^{\infty} j^{-n}[J_n(k\rho)+a_n H_n^{(2)}(k\rho)]e^{jn\phi}\}$$

$$= \frac{j\omega\varepsilon_0}{k} E_0 \sum_{n=-\infty}^{\infty} j^{-n}[J_n'(k\rho)+a_n H_n^{(2)'}(k\rho)]e^{jn\phi}$$

$$H^{in} = \frac{j\omega\varepsilon_d}{k_d} E_0 \sum_{n=-\infty}^{\infty} j^{-n} C_n'(k_d\rho)e^{jn\phi}$$

$$H_\phi^0 = H_\phi^{in}\,]_{\rho=a} \quad ,$$

which yields

$$\frac{\varepsilon_0}{k} = \sum_{n=-\infty}^{\infty} [J_n'(ka)+a_n H_n'^{(2)}(ka)] = \frac{\varepsilon_d}{k_d} \sum_{n=-\infty}^{\infty} C_n J_n'(k_d a) \tag{20}$$

$$E_z^0 = E_z^{in}]_{\rho=a} \quad ,$$

which yields

$$\sum_{n=-\infty}^{\infty} C_n J_n(k_d a) = \sum_{n=-\infty}^{\infty} J_n(ka) + a_n H_n^{(2)}(ka). \tag{21}$$

Eliminating C_n from (20) and (21), we get

$$a_n = \frac{-J_n(ka)}{H_n^{(2)}(ka)} \left[\frac{\varepsilon_d J_n'(k_d a)/\varepsilon_0 k_d J_n(k_d a) - J_n'(ka)/ka\ J_n(ka)}{\varepsilon_d J_n'(k_d a)/\varepsilon_0 k_d J_n(k_d a) - H_n^{(2)'}(ka)/ka\ H^{(2)}(ka)} \right] \tag{22}$$

as the Fourier coefficients of the scattered field.

We now proceed to evaluate the Fourier coefficients of an incident plane wave upon a two-layered dielectric cylinder with inner radius b and electrical constants ε_h, μ_0, $\sigma = 0$, outer radius a and ε_d, μ_0, $\sigma = 0$ as electrical constants. We have divided the entire region into three parts as shown in Figure 17.

The expressions for the waves in different regions are as follows:

$$E_z^i = E_0 e^{-jk\rho \cos\phi} = E_0 \sum_{n=-\infty}^{\infty} j^{-n} J_n(k\rho) e^{jn\phi}, \quad k^2 = \mu_0 \varepsilon_0 \omega^2$$

where E_z^i is the incident wave. The scattered field is

$$E_z^s = E_0 \sum_{n=-\infty}^{\infty} j^{-n} a_n H_n^{(2)}(k\rho) e^{jn\phi} \quad \rho \geq a$$

$$E_z(3) = E_0 \sum_{n=-\infty}^{+\infty} j^{-n} [J_n(k\rho) + a_n H_n^{(2)}(k\rho)] e^{jn\phi}, \quad \rho \geq a \tag{23}$$

$$E_z(1) = E_0 \sum_{n=-\infty}^{+\infty} j^{-n} C_n J_n(k_h \rho) e^{jn\phi}, \quad k_h^2 = \mu_0 \varepsilon_h \omega^2, \quad \rho \leq b \tag{24}$$

$$E_z(2) = E_0 \sum_{n=-\infty}^{+\infty} j^{-n} [D_n H_n^{(2)}(k_d \rho) + F_n J_n(k_d \rho)] e^{jn\phi}, \quad k_d^2 = \mu_0 \varepsilon_d \omega^2, \tag{25}$$

where $E_z(1)$, $E_z(2)$, and $E_z(3)$ are fields in regions 1, 2, and 3.

We have four coefficients--a_n, C_n, D_n, and F_n--to be determined; thus, we need four boundary conditions as follows:

$$E_z(1) = E_z(2)]_{\rho=b} \tag{26}$$

$$H_\phi(1) = H_\phi(2)]_{\rho=b} \tag{27}$$

$$E_z(2) = E_z(3)]_{\rho=a} \tag{28}$$

$$H_\phi(2) = H\ (3)]_{\rho=a}\ . \tag{29}$$

Note that $H_\phi = \frac{\hat{y}}{k^2}\frac{\partial E_z}{\partial \rho}$, $\hat{y} = j\omega\varepsilon$.

Following the procedure used for the one-layered case, we derive the following expression for the Fourier coefficients a_n.

$$a_n = \frac{J_n(ka)\,[J_n'(k_d a) - \frac{B}{A} H_n^{(2)'}(k_d a)] - \frac{\varepsilon_0 k_d}{\varepsilon_d k} J_n'(ka)\,[J_n(k_d a) - \frac{B}{A} H_n^{(2)}(k_d a)]}{\frac{\varepsilon_0 k_d}{\varepsilon_d k} H_n^{(2)'}(ka)\,[J_n(k_d a) - \frac{B}{A} H_n^{(2)}(k_d a)] - H_n^{(2)}(ka)\,[J_n'(k_d a) - \frac{B}{A} H_n^{(2)'}(k_d a)]} \tag{30}$$

where

$$A = \frac{\varepsilon_h}{k_h} J_n'(k_h b)\,[\frac{H_n^{(2)}(k_d b)}{J_n(k_h b)}] - \frac{\varepsilon_d}{k_d} H_n^{(2)'}(k_d b)$$

$$B = \frac{\varepsilon_h}{k_h} J_n'(k_h b)\,[\frac{J_n(k_d b)}{J_n(k_h b)}] - \frac{\varepsilon_d}{k_d} J_n'(k_d b).$$

For the case of the one-layered dielectric cylinder, the performance index function was taken to be the norm of the difference of two summations (squared) summed over different scattered angles, ϕ_m.

$$F = \sum_{m=1}^{M} \left| \sum_{n=-\infty}^{\infty} a_n(\kappa) e^{jn\phi_m} - \sum_{n=-\infty}^{\infty} a_n^g(\kappa^g) e^{jn\phi_m} \right|^2, \tag{31}$$

where κ is the relative dielectric constant of the layer

$$\varepsilon_d = \kappa\varepsilon_0$$

The superscript g indicates the given or known values.

It was numerically shown that we only need to vary the index n in Equation (31) from -7 to +7 to determine a_n with sufficient accuracy.

Rosenbrock's optimization technique (See Appendix A for more detail) was used to minimize F with respect to the optimizing parameter κ. ϕ varied from 0 to 90 degrees in 2° increments. The results are summarized in Table 11.

For the case of the two-layered dielectric cylinder, we were faced with excessive computer time. To economize on the computer time, the performance index F was taken to be

$$F = \left| \sum_{n=-6}^{6} a_n(\kappa_i) - \sum_{n=-6}^{6} a_n^g(\kappa_i^g) \right|^2. \tag{32}$$

where $\varepsilon_h = \kappa_1\varepsilon_0$ and $\varepsilon_d = \kappa_2\varepsilon_0$. Equation (32) varies from (31) only because ϕ_m is taken to be zero instead of varying it from 0° to 90°. Also, n is taken to vary from -6 to +6 without any loss of significant accuracy.

Rosenbrock's optimization technique was used here, and some of the results are summarized in Table 12.

Table 11

Relevant Data Corresponding to the One-Layered Dielectric Cylinder

$\kappa^g = 3.$ (exact)		$\kappa = 3.00159$ (numerically obtained)	
$\sum_{n=-7}^{+7} a_n^g e^{jn\phi_m}$ (exact)		$\sum_{n=-7}^{+7} a_n e^{jn\phi_m}$ (numerically obtained)	
Real Part	Imaginary Part	Real Part	Imaginary Part
0° -.84784	-0.97975	-.84871	-.98014
30° -.92928	-0.90284	-.93000	-.90315
60° -.77833	-.69952	-.77894	-.69960
90° -.70887	-.43726	-.70390	-.43704

Execution time = 11.58 sec.

Table 12

Comparison of the Exact and Numerically Obtained Relative Dielectric Constants of the Two-Layered Dielectric Cylinder

Layer Number	Relative Dielectric Constant	Exact	Obtained Numerically
1	κ_1	2.5	2.5026
2	κ_2	1.5	1.4991

Execution Time = 112.62 sec.

BIBLIOGRAPHY

1. Wait, J. R. [1962], Electromagnetic Waves in Stratified Media. New York: Pergamon Press, Inc.

2. Rosenbrock, H. H. [1960], "An automatic method for finding the greatest or least value of a function." Computer Journal, October 1960.

3. Fletcher, R., and Reeves, C. M. [1964], "Function minimization by conjugate gradients," Computer Journal, vol. 7, no. 2, 1964.

4. Ranston, A., and Wilf, H. S. [1960], Mathematical Methods for Digital Computers, New York/London: Wiley.

5. Harrington, R. F. [1961], Time Harmonic Electromagnetic Fields. New York: McGraw Hill.

6. Imbriale, W. A., and Mittra, R. [1969], "Two dimensional inverse scattering problem." Antenna Laboratory Report No. 69-6, University of Illinois, Urbana, Illinois.

APPENDIX A. ROSENBROCK'S ROTATING COORDINATE SYSTEM METHOD[2]

This method finds the greatest or least value of a function of several variables when the variables are restricted to a given region. Given a function $u(x_1, x_2, \ldots, x_n)$ to be minimized, the procedure starts with n orthogonal vectors ξ_1, ξ_2, ... ξ_n originating from an arbitrary point and proceeds by searching along each vector ξ_i. The principle adopted was to try a step of arbitrary length e. If this succeeded, e was multiplied by $\alpha > 1$. If it failed, e was multiplied by $-\beta$ where $0 < \beta < 1$. "Success," here, was defined to mean that the new value of u was less than or equal to the old value. Each such attempt is called a "trial." The criterion chosen was to go on until at least one trial had been successful in each direction, and one had failed. The set of trials made with one set of directions is called a "stage."

The method chosen for finding the new directions of ξ after each stage was the following. Suppose that d_1 is the algebraic sum of all the successful steps e_1, in the direction ξ_1, etc. Then let

$$
\begin{aligned}
A_1 &= d_1\xi_1^0 + d_2\xi_2^0 + \ldots + d_n\xi_n^0 \\
A_2 &= \qquad\quad d_2\xi_2^0 + \ldots + d_n\xi_n^0 \\
&\vdots \\
A_n &= \qquad\qquad\qquad\qquad d_n\xi_n^0.
\end{aligned}
$$

Orthogonal unit vectors ξ_1^1, ξ_2^1, ... , ξ_n^1 are obtained using the Gram-Schmidt orthonormalization method.[6]

$$B_1 = A_1 \qquad \xi_1^1 = B_1/|B_1|$$

$$B_2 = A_2 - A_1(\langle A_1,A_2\rangle/|A_1|^2), \quad \xi_2^1 = B_2/|B_2|$$

$$\vdots$$

$$B_n = A_n - \sum_{i=1}^{n-1} A_i(\langle A_n,A_i\rangle/|A_i|^2), \quad \xi_n^1 = B_n/|B_n| \ .$$

The search procedure is then repeated using newly defined ξ vectors. The procedure continues until the distance d_j along the ξ_j is smaller than a selected criterion for all j.

APPENDIX B. FUNCTION MINIMIZATION BY CONJUGATE GRADIENTS[3]

Consider a function of n variables whose value f(x) and gradient vector g(x) can be calculated at any point x. We assume that in a neighborhood of the required minimum h, the function may be expanded in the form

$$f(x) = f(h) + \frac{1}{2}(x-h)^T A(x-h) + \text{higher order terms} \tag{1}$$

where A, the matrix of second-order partial derivatives, is symmetric and positive definite, and $(x-h)^T$ is the transpose of (x-h).

For iterative methods having quadratic convergence, it is guaranteed that the minimum will be located exactly apart from rounding errors, within some finite number of iterations. Virtually all iterative minimization techniques, whether quadratically convergent or not, locate h as the limit of a sequence $x_0, x_1, x_2, \ldots$, where x_0, is an initial approximation to the position of the minimum, and x_{i+1} is the position of the minimum with respect to variations along the line through x_i in some specified direction P_i. Setting $g(x_i) = g_i$ for each i, x_{i+1} is determined from x_i by the relations

$$g_{i+1}^T P_i = 0 \tag{2}$$

$$x_{i+1} = x_i + \alpha_i P_i \tag{3}$$

where x_i, P_i, g_i are all n-vectors and α_i is a scalar.

The condition for the gradient to vanish is seen from Equation (1) to be

$$Ax = b \tag{4}$$

$$b = Ah. \tag{5}$$

Now, if the vectors $p_0, p_1, \ldots, p_{n-1}$ are A-conjugate, they satisfy

$$p_i^T A P_j = 0 \quad \text{for } i \neq j. \tag{6}$$

In the solution of Equations (4) and (5), directions $p_0, p_1, \ldots$ are generated such that p_{i+1} is a linear combination of $-g_{i+1}, p_0, p_1, \ldots p_i$ such that Equation (6) is satisfied. A straightforward calculation gives the following general minimization algorithm.

$$\begin{aligned}
x_0 &= \text{arbitrary} \\
g_0 &= g(x_0),\ p_0 = -g_0 \\
x_{i+1} &= \text{position of minimum on the line through } x_i \text{ in the} \\
&\quad\ \text{direction } p_i \\
g_{i+1} &= g(x_i+1) \\
\beta_i &= g_{i+1}^2/g_i^2 \\
p_{i+1} &= -g_{i+1} + \beta_i p_i
\end{aligned} \tag{7}$$

This process is guaranteed to locate the minimum of any quadratic function of n arguments in at most n iterations. For functions which are not quadratic, the process is iterative rather than n-step and a test of convergence is required.

Unclassified
Security Classification

DOCUMENT CONTROL DATA - R&D

(Security classification of title, body of abstract and indexing annotation must be entered when the overall report is classified)

1. ORIGINATING ACTIVITY *(Corporate author)*
Department of Electrical Engineering
University of Illinois
Urbana, Illinois 61801

2a. REPORT SECURITY CLASSIFICATION

2b. GROUP

3. REPORT TITLE
REMOTE PROBING OF INHOMOGENEOUS MEDIA USING PARAMETER OPTIMIZATION TECHNIQUES

4. DESCRIPTIVE NOTES *(Type of report and inclusive dates)*
Scientific - Interim

5. AUTHOR(S) *(Last name, first name, initial)*
Mostafavi, M.
Mittra, R.

6. REPORT DATE
April 1970

7a. TOTAL NO. OF PAGES
58

7b. NO. OF REFS
6

8a. CONTRACT OR GRANT NO.
NGR14-005-009

b. PROJECT AND TASK NO.

c.

d.

9a. ORIGINATOR'S REPORT NUMBER(S)
Antenna Laboratory Report No. 70-6

9b. OTHER REPORT NO(S) *(Any other numbers that may be assigned this report)*
Scientific Report No. 14

10. AVAILABILITY/LIMITATION NOTICES

11. SUPPLEMENTARY NOTES

12. SPONSORING MILITARY ACTIVITY

13. ABSTRACT

This paper discusses the problem of remote probing and diagnostics of an inhomogeneous medium whose properties vary along a single dimension only. The medium is described in terms of a set of unknown parameters that are determined via parameter optimization techniques. These techniques adjust the trial parameters describing the medium such that the response of the trial medium agrees closely with that of the actual medium.

DD FORM 1 JAN 64 1473

Unclassified
Security Classification

Unclassified

Security Classification

14. KEY WORDS	LINK A ROLE	LINK A WT	LINK B ROLE	LINK B WT	LINK C ROLE	LINK C WT
Remote Probing						
Inhomogeneous Media						
Inversion of Profiles						
Numerical Methods						
Parameter Optimization						

INSTRUCTIONS

1. ORIGINATING ACTIVITY: Enter the name and address of the contractor, subcontractor, grantee, Department of Defense activity or other organization *(corporate author)* issuing the report.

2a. REPORT SECURITY CLASSIFICATION: Enter the overall security classification of the report. Indicate whether "Restricted Data" is included. Marking is to be in accordance with appropriate security regulations.

2b. GROUP: Automatic downgrading is specified in DoD Directive 5200.10 and Armed Forces Industrial Manual. Enter the group number. Also, when applicable, show that optional markings have been used for Group 3 and Group 4 as authorized.

3. REPORT TITLE: Enter the complete report title in all capital letters. Titles in all cases should be unclassified. If a meaningful title cannot be selected without classification, show title classification in all capitals in parenthesis immediately following the title.

4. DESCRIPTIVE NOTES: If appropriate, enter the type of report, e.g., interim, progress, summary, annual, or final. Give the inclusive dates when a specific reporting period is covered.

5. AUTHOR(S): Enter the name(s) of author(s) as shown on or in the report. Enter last name, first name, middle initial. If military, show rank and branch of service. The name of the principal author is an absolute minimum requirement.

6. REPORT DATE: Enter the date of the report as day, month, year, or month, year. If more than one date appears on the report, use date of publication.

7a. TOTAL NUMBER OF PAGES: The total page count should follow normal pagination procedures, i.e., enter the number of pages containing information.

7b. NUMBER OF REFERENCES: Enter the total number of references cited in the report.

8a. CONTRACT OR GRANT NUMBER: If appropriate, enter the applicable number of the contract or grant under which the report was written.

8b, 8c, & 8d. PROJECT NUMBER: Enter the appropriate military department identification, such as project number, subproject number, system numbers, task number, etc.

9a. ORIGINATOR'S REPORT NUMBER(S): Enter the official report number by which the document will be identified and controlled by the originating activity. This number must be unique to this report.

9b. OTHER REPORT NUMBER(S): If the report has been assigned any other report numbers *(either by the originator or by the sponsor)*, also enter this number(s).

10. AVAILABILITY/LIMITATION NOTICES: Enter any limitations on further dissemination of the report, other than those imposed by security classification, using standard statements such as:

(1) "Qualified requesters may obtain copies of this report from DDC."

(2) "Foreign announcement and dissemination of this report by DDC is not authorized."

(3) "U. S. Government agencies may obtain copies of this report directly from DDC. Other qualified DDC users shall request through _____."

(4) "U. S. military agencies may obtain copies of this report directly from DDC. Other qualified users shall request through _____."

(5) "All distribution of this report is controlled. Qualified DDC users shall request through _____."

If the report has been furnished to the Office of Technical Services, Department of Commerce, for sale to the public, indicate this fact and enter the price, if known.

11. SUPPLEMENTARY NOTES: Use for additional explanatory notes.

12. SPONSORING MILITARY ACTIVITY: Enter the name of the departmental project office or laboratory sponsoring *(paying for)* the research and development. Include address.

13. ABSTRACT: Enter an abstract giving a brief and factual summary of the document indicative of the report, even though it may also appear elsewhere in the body of the technical report. If additional space is required, a continuation sheet shall be attached.

It is highly desirable that the abstract of classified reports be unclassified. Each paragraph of the abstract shall end with an indication of the military security classification of the information in the paragraph, represented as *(TS), (S), (C), or (U).*

There is no limitation on the length of the abstract. However, the suggested length is from 150 to 225 words.

14. KEY WORDS: Key words are technically meaningful terms or short phrases that characterize a report and may be used as index entries for cataloging the report. Key words must be selected so that no security classification is required. Identifiers, such as equipment model designation, trade name, military project code name, geographic location, may be used as key words but will be followed by an indication of technical context. The assignment of links, rules, and weights is optional.

Unclassified

Security Classification